AUTHENTICATED
U.S. GOVERNMENT
INFORMATION
GPO

FEDERAL REGISTER

Vol. 77 Wednesday,
No. 168 August 29, 2012

Pages 52201–52586

OFFICE OF THE FEDERAL REGISTER

The **FEDERAL REGISTER** (ISSN 0097–6326) is published daily, Monday through Friday, except official holidays, by the Office of the Federal Register, National Archives and Records Administration, Washington, DC 20408, under the Federal Register Act (44 U.S.C. Ch. 15) and the regulations of the Administrative Committee of the Federal Register (1 CFR Ch. I). The Superintendent of Documents, U.S. Government Printing Office, Washington, DC 20402 is the exclusive distributor of the official edition. Periodicals postage is paid at Washington, DC.

The **FEDERAL REGISTER** provides a uniform system for making available to the public regulations and legal notices issued by Federal agencies. These include Presidential proclamations and Executive Orders, Federal agency documents having general applicability and legal effect, documents required to be published by act of Congress, and other Federal agency documents of public interest.

Documents are on file for public inspection in the Office of the Federal Register the day before they are published, unless the issuing agency requests earlier filing. For a list of documents currently on file for public inspection, see *www.ofr.gov.*

The seal of the National Archives and Records Administration authenticates the Federal Register as the official serial publication established under the Federal Register Act. Under 44 U.S.C. 1507, the contents of the **Federal Register** shall be judicially noticed.

The **Federal Register** is published in paper and on 24x microfiche. It is also available online at no charge at *www.fdsys.gov*, a service of the U.S. Government Printing Office.

The online edition of the **Federal Register** is issued under the authority of the Administrative Committee of the Federal Register as the official legal equivalent of the paper and microfiche editions (44 U.S.C. 4101 and 1 CFR 5.10). It is updated by 6:00 a.m. each day the **Federal Register** is published and includes both text and graphics from Volume 59, 1 (January 2, 1994) forward. For more information, contact the GPO Customer Contact Center, U.S. Government Printing Office. Phone 202-512-1800 or 866-512-1800 (toll free). E-mail, *gpo@custhelp.com.*

The annual subscription price for the **Federal Register** paper edition is $749 plus postage, or $808, plus postage, for a combined **Federal Register, Federal Register** Index and List of CFR Sections Affected (LSA) subscription; the microfiche edition of the **Federal Register** including the **Federal Register** Index and LSA is $165, plus postage. Six month subscriptions are available for one-half the annual rate. The prevailing postal rates will be applied to orders according to the delivery method requested. The price of a single copy of the daily **Federal Register,** including postage, is based on the number of pages: $11 for an issue containing less than 200 pages; $22 for an issue containing 200 to 400 pages; and $33 for an issue containing more than 400 pages. Single issues of the microfiche edition may be purchased for $3 per copy, including postage. Remit check or money order, made payable to the Superintendent of Documents, or charge to your GPO Deposit Account, VISA, MasterCard, American Express, or Discover. Mail to: U.S. Government Printing Office—New Orders, P.O. Box 979050, St. Louis, MO 63197-9000; or call toll free 1-866-512-1800, DC area 202-512-1800; or go to the U.S. Government Online Bookstore site, see *bookstore.gpo.gov.*

There are no restrictions on the republication of material appearing in the **Federal Register.**

How To Cite This Publication: Use the volume number and the page number. Example: 77 FR 12345.

Postmaster: Send address changes to the Superintendent of Documents, Federal Register, U.S. Government Printing Office, Washington, DC 20402, along with the entire mailing label from the last issue received.

SUBSCRIPTIONS AND COPIES

PUBLIC

Subscriptions:

Paper or fiche	**202–512–1800**
Assistance with public subscriptions	**202–512–1806**
General online information	**202–512–1530; 1–888–293–6498**

Single copies/back copies:

Paper or fiche	**202–512–1800**
Assistance with public single copies	**1–866–512–1800 (Toll-Free)**

FEDERAL AGENCIES

Subscriptions:

Paper or fiche	**202–741–6005**
Assistance with Federal agency subscriptions	**202–741–6005**

FEDERAL REGISTER WORKSHOP

THE FEDERAL REGISTER: WHAT IT IS AND HOW TO USE IT

FOR: Any person who uses the Federal Register and Code of Federal Regulations.

WHO: Sponsored by the Office of the Federal Register.

WHAT: Free public briefings (approximately 3 hours) to present:

1. The regulatory process, with a focus on the Federal Register system and the public's role in the development of regulations.
2. The relationship between the Federal Register and Code of Federal Regulations.
3. The important elements of typical Federal Register documents.
4. An introduction to the finding aids of the FR/CFR system.

WHY: To provide the public with access to information necessary to research Federal agency regulations which directly affect them. There will be no discussion of specific agency regulations.

WHEN: Tuesday, September 11, 2012
9 a.m.–12:30 p.m.

WHERE: Office of the Federal Register
Conference Room, Suite 700
800 North Capitol Street, NW.
Washington, DC 20002

RESERVATIONS: (202) 741–6008

Printed on recycled paper.

Contents

Federal Register

Vol. 77, No. 168

Wednesday, August 29, 2012

Agriculture Department
See Forest Service

Air Force Department
NOTICES
Meetings:
U.S. Air Force Academy Board of Visitors, 52316–52317

Bureau of Safety and Environmental Enforcement
NOTICES
Agency Information Collection Activities; Proposals, Submissions, and Approvals:
Subpart C, Pollution Prevention and Control; Comment Request, 52341–52342

Centers for Disease Control and Prevention
NOTICES
Agency Information Collection Activities; Proposals, Submissions, and Approvals, 52334–52335
Meetings:
Advisory Board on Radiation and Worker Health, 52335–52336

Children and Families Administration
See Refugee Resettlement Office

Commerce Department
See Foreign-Trade Zones Board
See International Trade Administration
See National Oceanic and Atmospheric Administration
See Patent and Trademark Office

Consumer Product Safety Commission
RULES
Safety Standard for Play Yards, 52220–52228
PROPOSED RULES
Safety Standard for Play Yards, 52272–52277

Defense Acquisition Regulations System
RULES
Defense Federal Acquisition Regulation Supplements:
DoD Voucher Processing, 52258–52259
Inflation Adjustment of Threshold for Acquisition of Right-Hand Drive Passenger Sedans, 52252–52253
Reporting of Government-Furnished Property, 52254–52258
Technical Amendments, 52253–52254

Defense Department
See Air Force Department
See Defense Acquisition Regulations System
See Navy Department

Drug Enforcement Administration
NOTICES
Importers of Controlled Substances:
Registration, 52366
Manufacturers of Controlled Substances:
Agilent Technologies, Registration, 52368
American Radiolabeled Chemicals, Inc., Registration, 52368–52369
Austin Pharma, LLC; Registration, 52368
Cerilliant Corp., Application, 52366–52367
Euticals Inc., Application, 52367–52368
Stepan Co., Registration, 52369

Education Department
NOTICES
Agency Information Collection Activities; Proposals, Submissions, and Approvals:
EDFacts Collection of ESEA Flexibility Data, 52317–52318
Federal Student Aid; Electronic Debit Payment Option for Student Loans, 52319
Needs Sensing Survey under REL Program; Sample Survey Instrument for School Board Members and District Administrators, 52319–52320
Study of Strategies for Improving Quality of Local Grantee Program Evaluation, 52318–52319

Energy Department
See Western Area Power Administration

Environmental Protection Agency
RULES
Approvals and Promulgations of Implementation Plans and Designations of Areas for Air Quality Planning Purposes:
Tennessee, Bristol; Determination of Attaining Data for 2008 Lead Standards, 52232–52233
Approvals and Promulgations of Implementation Plans and Operating Permits Program:
Commonwealth of Puerto Rico; Administrative Changes, 52233–52236
Pesticide Tolerances:
Clothianidin, 52246–52252
Pendimethalin, 52240–52246
Thifensulfuron Methyl, 52236–52240
PROPOSED RULES
Approvals of Air Quality Implementation Plans:
California; South Coast Air Quality Management District; Prevention of Significant Deterioration; Greenhouse Gases, 52277–52279
Standards of Performance for Stationary Gas and Combusion Turbines, 52554–52581
NOTICES
Access to Confidential Business Information by Enrollees under Senior Environmental Employment Program, 52321–52322
Administrative Orders on Consent:
Mcclellan Air Force Base Superfund Site, 52322
Agency Information Collection Activities; Proposals, Submissions, and Approvals:
Certification and Compliance Requirements for Nonroad Spark-Ignition Engines, 52323–52324
EPA Worker Protection Standards for Hazardous Waste Operations and Emergency Response, 52322–52323
Certain New Chemicals; Receipt and Status Information, 52325–52328
Meetings:
Clean Air Act Advisory Committee, 52328
National Environmental Justice Advisory Council; Comment Request; Public Teleconference, 52328–52329

Proposed Administrative Settlement Agreement under CERCLA:
Federal Creosote Superfund Site, Manville, Somerset County, NJ, 52329–52330
Requests for Additional Nominations:
Candidates for Science Advisory Board Chemical Assessment Advisory Committee, 52330–52331
Requests for Amendments to Delete Uses in Certain Pesticide Registrations, 52331–52332

Executive Office of the President
See Presidential Documents

Federal Aviation Administration
RULES
Airworthiness Directives:
Goodyear Aviation Tires, 52203–52205
The Boeing Company Airplanes, 52201–52203, 52212–52217
Univair Aircraft Corporation Airplanes, 52205–52212
Amendments of Class D and Class E Airspace:
Bozeman, MT, 52217–52218
Amendments of Class E Airspace:
Lewistown, MT, 52219–52220
Montgomery, AL; Correction, 52218–52219
PROPOSED RULES
Airworthiness Directives:
Agusta S.p.A. Helicopters, 52270–52272
Eurocopter Deutschland GmbH Helicopters, 52265–52270
Hughes Helicopters, Inc., and McDonnell Douglas Helicopter Systems (Type Certificate currently held by MD Helicopters, Inc.) Helicopters, 52264–52265

Federal Communications Commission
PROPOSED RULES
Proposed Urban Rates Survey and Issues Relating to Reasonable Comparability Benchmarks and Local Rate Floor , 52279–52292
Radio Broadcasting Services:
Greenup, IL, 52292–52293
NOTICES
Meetings:
Federal Advisory Committee Act; Technological Advisory Council, 52332–52333

Federal Motor Carrier Safety Administration
NOTICES
Agency Information Collection Activities; Proposals, Submissions, and Approvals:
Information Technology Services Survey Portal Customer Satisfaction Assessment, 52380–52381
Qualifications of Drivers:
Exemption Applications; Diabetes Mellitus, 52384–52388
Exemption Applications; Vision, 52381–52384, 52388–52393

Federal Railroad Administration
NOTICES
Meetings:
Railroad Safety Advisory Committee, 52393

Fish and Wildlife Service
PROPOSED RULES
Endangered and Threatened Wildlife and Plants:
90- Finding on Petition to List Mimulus gemmiparus (Rocky Mountain monkeyflower) and to Designate Critical Habitat, 52293–52300
90-Day Finding on Petition to List Prince of Wales Flying Squirrel as Threatened or Endangered, 52301–52308
NOTICES
Agency Information Collection Activities; Proposals, Submissions, and Approvals:
Annual Certification of Hunting and Sport Fishing Licenses Issued, 52344
Land-Based Wind Energy Guidelines, 52344–52346
National Wildlife Refuge Visitor Check-In Permit and Use Report, 52343
Environmental Assessments:
Hamden Slough National Wildlife Refuge, Becker County, MN, 52346–52347

Food and Drug Administration
RULES
Food Additives Permitted for Direct Addition to Food for Human Consumption:
Vitamin D2 Bakers Yeast, 52228–52232

Foreign-Trade Zones Board
NOTICES
Applications for Reorganization Under the Alternative Site Framework:
Foreign-Trade Zone 26, Atlanta, GA, 52310
Expansions of Foreign-Trade Zones:
Zone 61, San Juan, Puerto Rico, 52310–52311

Forest Service
NOTICES
Meetings:
Central Idaho Resource Advisory Committee, 52310
Southwest Montana Resource Advisory Committee, 52309–52310
Tri-County Resource Advisory Committee, 52309

Health and Human Services Department
See Centers for Disease Control and Prevention
See Food and Drug Administration
See National Institutes of Health
See Refugee Resettlement Office
NOTICES
International Workshop on Alternatives to the Murine Histamine Sensitization Test for Acellular Pertussis Vaccines:
State of the Science and the Path Forward, 52333–52334

Housing and Urban Development Department
NOTICES
Federal Properties Suitable as Facilities to Assist Homeless, 52398–52551

Indian Affairs Bureau
NOTICES
Requests for Nominations:
Bureau of Indian Education Advisory Board for Exceptional Children, 52347–52352

Interior Department
See Bureau of Safety and Environmental Enforcement
See Fish and Wildlife Service
See Indian Affairs Bureau
See Land Management Bureau
See Ocean Energy Management Bureau
See Reclamation Bureau
NOTICES
Meetings:
Secretarial Commission on Indian Trust Administration and Reform, 52340–52341

International Trade Administration
NOTICES
Antidumping Duty Administrative Reviews; Results, Extensions, Amendments, etc.:
Wooden Bedroom Furniture from People's Republic of China, 52311–52313
Scope Rulings, 52313

Justice Department
See Drug Enforcement Administration
See Justice Programs Office

Justice Programs Office
NOTICES
Agency Information Collection Activities; Proposals, Submissions, and Approvals:
Bureau of Justice Assistance Application Form; Public Safety Officer's Medal of Valor, 52369–52370

Labor Department
See Workers Compensation Programs Office
NOTICES
Agency Information Collection Activities; Proposals, Submissions, and Approvals:
International Price Program U.S. Export and Import Price Indexes, 52370

Land Management Bureau
NOTICES
Environmental Impact Statements; Availability, etc.:
Rio Mesa Gen-Tie Project and Possible Land Use Plan Amendment, Riverside County, CA, 52352–52353
Meetings:
Wyoming; Proposed Withdrawal and Opportunity; Correction, 52353

National Highway Traffic Safety Administration
NOTICES
Petitions for Exemptions from Vehicle Theft Prevention Standard:
BMW of North America, LLC, 52393–52395

National Institutes of Health
NOTICES
Meetings:
Center for Scientific Review, 52338–52339
Eunice Kennedy Shriver National Institute of Child Health and Human Development, 52337–52338
National Institute of Allergy and Infectious Diseases, 52338
National Institute of Mental Health, 52336–52337
National Institute of Neurological Disorders and Stroke, 52337
National Institute On Alcohol Abuse And Alcoholism, 52337

National Oceanic and Atmospheric Administration
RULES
Atlantic Highly Migratory Species:
Lifting Trade Restrictive Measures, 52259–52261
Fisheries of the Caribbean, Gulf of Mexico, and South Atlantic:
South Atlantic Snapper–Grouper Fishery; 2012–2013 Accountability Measure and Closure for Recreational Black Sea Bass in the South Atlantic, 52261–52262
Fisheries of the Northeastern United States:
Summer Flounder Fishery; Commercial Quota Harvested for Commonwealth of Massachusetts; Closure, 52262–52263
NOTICES
Meetings:
Atlantic Highly Migratory Species Advisory Panel, 52314
Mid-Atlantic Fishery Management Council, 52315
New England Fishery Management Council, 52314
North Pacific Fishery Management Council, 52315

Navy Department
NOTICES
Records of Decisions:
Surveillance Towed Array Sensor System Low Frequency Active Sonar, 52317

Nuclear Regulatory Commission
NOTICES
Meetings:
ACRS Subcommittee on Planning and Procedures, 52371
ACRS Subcommittee on Plant License Renewal, 52372
Advisory Committee on Reactor Safeguards Subcommittee on Fukushima, 52371–52372

Ocean Energy Management Bureau
NOTICES
Right-of-Way Grant of Submerged Lands on Outer Continental Shelf to Support Renewable Energy Development, 52353–52365

Patent and Trademark Office
NOTICES
Deadline to File Requests:
Inter Partes Reexamination Proceedings and Modification of Notice of Failure to Comply Form, 52315–52316

Presidential Documents
PROCLAMATIONS
Special Observances:
Women's Equality Day (Proc. 8848), 52583–52586

Reclamation Bureau
NOTICES
Environmental Impact Statements; Availability, etc.:
Arkansas Valley Conduit and Long-Term Excess Capacity Master Contract, Fryingpan-Arkansas Project, Colorado, 52365–52366

Refugee Resettlement Office
NOTICES
Awards of Single-source Program Expansion Supplement Grants:
Catholic Charities of Southern Nevada in Las Vegas, NV, a Wilson-Fish Project, 52339–52340

Securities and Exchange Commission
NOTICES
Agency Information Collection Activities; Proposals, Submissions, and Approvals, 52372–52373
Self-Regulatory Organizations; Proposed Rule Changes:
C2 Options Exchange, Inc., 52377–52379
NASDAQ Stock Market, LLC, 52373–52377

Small Business Administration
NOTICES
Major Disaster Declarations:
Ohio, 52379
Meetings:
Advisory Committee on Veterans Business Affairs, 52379

State Department
NOTICES
Delegations of Authority by Secretary of State to Assistant Secretary of State for Consular Affairs:
Waive Visa Interview as Result of Unusual or Emergent Circumstances, 52379–52380

Transportation Department
See Federal Aviation Administration
See Federal Motor Carrier Safety Administration
See Federal Railroad Administration
See National Highway Traffic Safety Administration

Western Area Power Administration
NOTICES
Environmental Impact Statements; Availability, etc.:
Proposed Interconnection of Buffalo Ridge III Wind Project, Brookings and Deuel Counties, SD; Cancellation, 52320

Workers Compensation Programs Office
NOTICES
Agency Information Collection Activities; Proposals, Submissions, and Approvals, 52370–52371

Separate Parts In This Issue

Part II
Housing and Urban Development Department, 52398–52551

Part III
Environmental Protection Agency, 52554–52581

Part IV
Presidential Documents, 52583–52586

Reader Aids
Consult the Reader Aids section at the end of this page for phone numbers, online resources, finding aids, reminders, and notice of recently enacted public laws.

To subscribe to the Federal Register Table of Contents LISTSERV electronic mailing list, go to http://listserv.access.gpo.gov and select Online mailing list archives, FEDREGTOC-L, Join or leave the list (or change settings); then follow the instructions.

CFR PARTS AFFECTED IN THIS ISSUE

A cumulative list of the parts affected this month can be found in the Reader Aids section at the end of this issue.

3 CFR

Proclamation:

8848 52585

14 CFR

39 (4 documents) 52201, 52203, 52205, 52212

71 (3 documents) 52217, 52218, 52219

Proposed Rules:

39 (3 documents) 52264, 52265, 52270

16 CFR

1221 52220

Proposed Rules:

1221 52272

21 CFR

172 52228

40 CFR

52 (2 documents) 52232, 52233

70 52233

180 (3 documents) 52236, 52240, 52246

Proposed Rules:

52 52277

60 52554

47 CFR

Proposed Rules:

54 52279

73 52292

48 CFR

201 52252

209 52253

210 52253

211 52254

212 (2 documents) 52252, 52254

215 52253

217 52253

230 52253

237 52253

242 52258

245 52253

252 (2 documents) 52253, 52254

50 CFR

300 52259

622 52261

635 52259

648 52262

Proposed Rules:

17 (2 documents) 52293, 52301

Rules and Regulations

Federal Register

Vol. 77, No. 168

Wednesday, August 29, 2012

This section of the FEDERAL REGISTER contains regulatory documents having general applicability and legal effect, most of which are keyed to and codified in the Code of Federal Regulations, which is published under 50 titles pursuant to 44 U.S.C. 1510.

The Code of Federal Regulations is sold by the Superintendent of Documents. Prices of new books are listed in the first FEDERAL REGISTER issue of each week.

DEPARTMENT OF TRANSPORTATION

Federal Aviation Administration

14 CFR Part 39

[Docket No. FAA–2011–1319; Directorate Identifier 2011–NM–143–AD; Amendment 39–17151; AD 2012–16–04]

RIN 2120–AA64

Airworthiness Directives; The Boeing Company Airplanes

AGENCY: Federal Aviation Administration (FAA), DOT.

ACTION: Final rule.

SUMMARY: We are adopting a new airworthiness directive (AD) for certain The Boeing Company Model 777–200 and –300 series airplanes equipped with Rolls-Royce RB211 Trent 800 engines. This AD was prompted by reports of events related to thermal damage of the thrust reverser (T/R) inner wall on Rolls-Royce RB211 Trent 800 engines. This AD requires replacing the bleed valve parts and tubing with new parts and tubing on the left and right engines; and installing Aero-Engine database (AEDB) software in the airplane information management system (AIMS) hardware. We are issuing this AD to prevent T/R thermal damage caused by excessive heat downstream of the 8th stage IP8 exhaust ports, which could result in T/R structural failure. This failure could result in large pieces of the T/R or adjacent components departing the airplane. A separated T/R piece could result in a rejected takeoff and cause asymmetric thrust and consequent loss of control of the airplane during reverse thrust operations. Separated components could also cause structural damage to the airplane, damage to other airplanes due to debris left on the runway, or injury to people on the ground.

DATES: This AD is effective October 3, 2012.

The Director of the Federal Register approved the incorporation by reference of certain publications listed in the AD as of October 3, 2012.

ADDRESSES: For Boeing service information identified in this AD, contact Boeing Commercial Airplanes, Attention: Data & Services Management, P.O. Box 3707, MC 2H–65, Seattle, Washington 98124–2207; phone: 206–544–5000, extension 1; fax: 206–766–5680; Internet: *https://www.myboeingfleet.com.* For Rolls-Royce service information identified in this AD, contact Rolls-Royce plc, P.O. Box 31, Derby, DE24 8BJ, England; telephone 011 44 1332 242424; fax 011 44 1332 249936; Internet: *https://www.aeromanager.com.* You may review copies of the referenced service information at the FAA, Transport Airplane Directorate, 1601 Lind Avenue SW., Renton, Washington. For information on the availability of this material at the FAA, call 425–227–1221.

Examining the AD Docket

You may examine the AD docket on the Internet at *http://www.regulations.gov;* or in person at the Docket Management Facility between 9 a.m. and 5 p.m., Monday through Friday, except Federal holidays. The AD docket contains this AD, the regulatory evaluation, any comments received, and other information. The address for the Docket Office (phone: 800–647–5527) is Document Management Facility, U.S. Department of Transportation, Docket Operations, M–30, West Building Ground Floor, Room W12–140, 1200 New Jersey Avenue SE., Washington, DC 20590.

FOR FURTHER INFORMATION CONTACT: Margaret Langsted, Aerospace Engineer, Propulsion Branch, ANM–140S, FAA, Seattle Aircraft Certification Office, 1601 Lind Avenue SW., Renton, Washington 98057–3356; phone: 425–917–6500; fax: 425–917–6590; email: *Margaret.Langsted@faa.gov.*

SUPPLEMENTARY INFORMATION:

Discussion

We issued a notice of proposed rulemaking (NPRM) to amend 14 CFR part 39 to include an AD that would apply to the specified products. That NPRM published in the **Federal Register** on December 12, 2011 (76 FR 77157). That NPRM proposed to require replacing bleed valve parts and tubing with new parts and tubing on the left and right Rolls-Royce RB211 Trent 800 engines; and installing AEDB software in the airplane AIMS hardware.

Comments

We gave the public the opportunity to participate in developing this AD. The following presents the comments received on the proposal (76 FR 77157, December 12, 2011) and the FAA's response to each comment.

Request To Use Certain Service Information

American Airlines (American) and Boeing requested that the NPRM (76 FR 77157, December 12, 2011) allow the use of Boeing Special Attention Service Bulletin 777–31–0177, Revision 1, dated October 13, 2011, as a source of information to comply with the actions required by paragraph (h) of the NPRM.

We agree. Paragraph (h) of the NPRM (76 FR 77157, December 12, 2011) specified the use of Boeing Special Attention Service Bulletin 777–31–0177, dated September 23, 2010. We have revised paragraph (h) of the final rule to add Boeing Special Attention Service Bulletin 777–31–0177, Revision 1, dated October 13, 2011, as an additional source of service information for accomplishing the actions specified in that paragraph. Boeing Special Attention Service Bulletin 777–31–0177, Revision 1, dated October 13, 2011, specifies updates to the concurrent requirements paragraph.

Request To Allow Use of Service Information Revision

American requested that the NPRM (76 FR 77157, December 12, 2011) allow the use of Rolls-Royce Service Bulletin RB.211–75–G466, dated November 21, 2011, as an additional source of information to accomplish the requirements of paragraph (g) of the NPRM.

We agree. We have changed the final rule to specify that the actions required by paragraph (g) of the AD may be done in accordance with the Accomplishment Instructions of Rolls-Royce Service Bulletin RB.211–75–G466, Revision 1, including Supplement, dated June 20, 2011; or Rolls-Royce Service Bulletin RB.211–75–G466, Revision 2, including Supplement, dated November 21, 2011.

Conclusion

We reviewed the relevant data, considered the comments received, and determined that air safety and the public interest require adopting the AD with the changes described previously and minor editorial changes. We have determined that these minor changes:

- Are consistent with the intent that was proposed in the NPRM (76 FR 77157, December 12, 2011) for correcting the unsafe condition; and
- Do not add any additional burden upon the public than was already proposed in the NPRM (76 FR 77157, December 12, 2011).

We also determined that these changes will not increase the economic burden on any operator or increase the scope of the AD.

Costs of Compliance

We estimate that this AD affects 55 airplanes of U.S. registry.

We estimate the following costs to comply with this AD:

ESTIMATED COSTS

Action	Labor cost	Parts cost	Cost per product	Cost on U.S. operators
Replacement	16 work-hours × $85 per hour = $1,360	$75,000	$76,360	$4,199,800
Installation of AEDB software	1 work-hour × $85 per hour = $85	0	85	4,675

According to the manufacturer, some of the costs of this AD may be covered under warranty, thereby reducing the cost impact on affected individuals. We do not control warranty coverage for affected individuals. As a result, we have included all costs in our cost estimate.

Authority for This Rulemaking

Title 49 of the United States Code specifies the FAA's authority to issue rules on aviation safety. Subtitle I, section 106, describes the authority of the FAA Administrator. Subtitle VII: Aviation Programs, describes in more detail the scope of the Agency's authority.

We are issuing this rulemaking under the authority described in Subtitle VII, Part A, Subpart III, Section 44701: ''General requirements.'' Under that section, Congress charges the FAA with promoting safe flight of civil aircraft in air commerce by prescribing regulations for practices, methods, and procedures the Administrator finds necessary for safety in air commerce. This regulation is within the scope of that authority because it addresses an unsafe condition that is likely to exist or develop on products identified in this rulemaking action.

Regulatory Findings

This AD will not have federalism implications under Executive Order 13132. This AD will not have a substantial direct effect on the States, on the relationship between the national government and the States, or on the distribution of power and responsibilities among the various levels of government.

For the reasons discussed above, I certify that this AD:

(1) Is not a ''significant regulatory action'' under Executive Order 12866,

(2) Is not a ''significant rule'' under DOT Regulatory Policies and Procedures (44 FR 11034, February 26, 1979),

(3) Will not affect intrastate aviation in Alaska, and

(4) Will not have a significant economic impact, positive or negative, on a substantial number of small entities under the criteria of the Regulatory Flexibility Act.

List of Subjects in 14 CFR Part 39

Air transportation, Aircraft, Aviation safety, Incorporation by reference, Safety.

Adoption of the Amendment

Accordingly, under the authority delegated to me by the Administrator, the FAA amends 14 CFR part 39 as follows:

PART 39—AIRWORTHINESS DIRECTIVES

■ 1. The authority citation for part 39 continues to read as follows:

Authority: 49 U.S.C. 106(g), 40113, 44701.

§ 39.13 [Amended]

■ 2. The FAA amends § 39.13 by adding the following new airworthiness directive (AD):

2012–16–04 The Boeing Company: Amendment 39–17151; Docket No. FAA–2011–1319; Directorate Identifier 2011–NM–143–AD.

(a) Effective Date

This AD is effective October 3, 2012.

(b) Affected ADs

None.

(c) Applicability

This AD applies to The Boeing Company Model 777–200 and –300 series airplanes, certificated in any category, equipped with Rolls-Royce RB211 Trent 800 engines, as identified in Boeing Service Bulletin 777–75A0002, Revision 1, dated October 26, 2011.

(d) Subject

Joint Aircraft System Component (JASC)/Air Transport Association (ATA) of America Code 78, Exhaust.

(e) Unsafe Condition

This AD was prompted by reports of events related to thermal damage of the thrust reverser (T/R) inner wall on Rolls-Royce RB211 Trent 800 engines. We are issuing this AD to eliminate T/R thermal damage caused by excessive heat downstream of the 8th stage IP8 exhaust ports, which could result in T/R structural failure. This failure could result in large pieces of the T/R or adjacent components departing the airplane. A separated T/R piece could result in a rejected takeoff and cause asymmetric thrust and consequent loss of control of the airplane during reverse thrust operations. Separated components could also cause structural damage to the airplane, damage to other airplanes due to debris left on the runway, or injury to people on the ground.

(f) Compliance

Comply with this AD within the compliance times specified, unless already done.

(g) Replacement of Bleed Valve Parts and Tubing

Within 36 months after the effective date of this AD, replace the bleed valve parts and tubing with new parts and tubing on the left and right engines, in accordance with the Accomplishment Instructions of Boeing Service Bulletin 777–75A0002, Revision 1, dated October 26, 2011; Rolls-Royce Service Bulletin RB.211–75–G466, Revision 1, including Supplement, dated June 20, 2011; or Rolls-Royce Service Bulletin RB.211–75–G466, Revision 2, including Supplement, dated November 21, 2011.

(h) Concurrent Requirements

Prior to or concurrently with doing the actions required by paragraph (g) of this AD, install Aero-Engine database software, software part number 3110–BCG–00R–06, media set part number 243W0033–7, in the airplane information management system hardware, in accordance with the Accomplishment Instructions of Boeing Special Attention Service Bulletin 777–31–

0177, dated September 23, 2010; or Boeing Special Attention Service Bulletin 777–31–0177, Revision 1, dated October 13, 2011.

(i) Credit for Previous Actions

This paragraph provides credit for the replacement required by paragraph (g) of this AD, if the replacement was performed before the effective date of this AD using Boeing Alert Service Bulletin 777–75A0002, dated January 12, 2011.

(j) Alternative Methods of Compliance (AMOCs)

(1) The Manager, Seattle Aircraft Certification Office (ACO), FAA, has the authority to approve AMOCs for this AD, if requested using the procedures found in 14 CFR 39.19. In accordance with 14 CFR 39.19, send your request to your principal inspector or local Flight Standards District Office, as appropriate. If sending information directly to the manager of the ACO, send it to the attention of the person identified in the Related Information section of this AD. Information may be emailed to: *9-ANM-Seattle-ACO-AMOC-Requests@faa.gov.*

(2) Before using any approved AMOC, notify your appropriate principal inspector, or lacking a principal inspector, the manager of the local flight standards district office/certificate holding district office.

(k) Related Information

For more information about this AD, contact Margaret Langsted, Aerospace Engineer, Propulsion Branch, ANM–140S, FAA, Seattle Aircraft Certification Office, 1601 Lind Avenue SW., Renton, Washington 98057–3356; phone: 425–917–6500; fax: 425–917–6590; email: *Margaret.Langsted@faa.gov.*

(l) Material Incorporated by Reference

(1) The Director of the Federal Register approved the incorporation by reference (IBR) under 5 U.S.C. 552(a) and 1 CFR part 51.

(2) You must use the following service information to do the actions required by this AD, unless the AD specifies otherwise.

(i) Boeing Service Bulletin 777–75A0002, Revision 1, dated October 26, 2011.

(ii) Boeing Special Attention Service Bulletin 777–31–0177, dated September 23, 2010.

(iii) Boeing Special Attention Service Bulletin 777–31–0177, Revision 1, dated October 13, 2011.

(iv) Rolls-Royce Service Bulletin RB.211–75–G466, Revision 1, including Supplement, dated June 20, 2011. The revision level of this document is not identified in the document.

(v) Rolls-Royce Service Bulletin RB.211–75–G466, Revision 2, including Supplement, dated November 21, 2011. The revision level of this document is not identified in the document.

(3) For Boeing service information identified in this AD, contact For Boeing service information identified in this AD, contact Boeing Commercial Airplanes, Attention: Data & Services Management, P.O. Box 3707, MC 2H–65, Seattle, Washington 98124–2207; phone: 206–544–5000, extension 1; fax: 206–766–5680; Internet: *https://www.myboeingfleet.com.*

(4) For Rolls-Royce service information identified in this AD, contact Rolls-Royce plc, P.O. Box 31, Derby, DE24 8BJ, England; telephone: 011 44 1332 242424; fax: 011 44 1332 249936; Internet: *https://www.aeromanager.com.*

(5) You may review copies of the referenced service information at the FAA, Transport Airplane Directorate, 1601 Lind Avenue SW., Renton, Washington. For information on the availability of this material at the FAA, call 425–227–1221.

(6) You may also review copies of the service information that is incorporated by reference at the National Archives and Records Administration (NARA). For information on the availability of this material at NARA, call 202–741–6030, or go to: *http://www.archives.gov/federal-register/cfr/ibr-locations.html.*

Issued in Renton, Washington, on July 26, 2012.

Kalene C. Yanamura,

Acting Manager, Transport Airplane Directorate, Aircraft Certification Service.

[FR Doc. 2012–19252 Filed 8–28–12; 8:45 am]

BILLING CODE 4910–13–P

DEPARTMENT OF TRANSPORTATION

Federal Aviation Administration

14 CFR Part 39

[Docket No. FAA–2012–0881; Directorate Identifier 2012–CE–029–AD; Amendment 39–17164; AD 2012–17–01]

RIN 2120–AA64

Airworthiness Directives; Goodyear Aviation Tires

AGENCY: Federal Aviation Administration (FAA), DOT.

ACTION: Final rule; request for comments.

SUMMARY: We are adopting a new airworthiness directive (AD) for Goodyear Aviation Tires, part number 299K63–1 (Brazilian made new tires only), installed on various transport category airplanes, including but not limited to Bombardier, Inc. Model CL–600–2B19 airplanes. This AD results from mandatory continuing airworthiness information (MCAI) issued by the aviation authority of another country to identify and correct an unsafe condition on an aviation product. The MCAI describes the unsafe condition as tire tread separations and tread-area bulges on the main landing gear tires due to low adhesion in the tread shoulder area. The unsafe condition is specific to Brazilian produced new tires, size H29x9.0–15, only; retread tires are not affected by this AD. This condition, if not detected and corrected, could cause the main landing gear tires to fail during takeoff or landing. The failure may cause damage to the airplane structure, flaps, engine, and wheel well and result in reduced controllability of the airplane. We are issuing this AD to require actions to address the unsafe condition on these products.

DATES: This AD is effective September 13, 2012.

The Director of the Federal Register approved the incorporation by reference of a certain publication listed in the AD as of September 13, 2012.

We must receive comments on this AD by October 15, 2012.

ADDRESSES: You may send comments by any of the following methods:

- *Federal eRulemaking Portal:* Go to *http://www.regulations.gov.* Follow the instructions for submitting comments.
- *Fax:* (202) 493–2251.
- *Mail:* U.S. Department of Transportation, Docket Operations, M–30, West Building Ground Floor, Room W12–140, 1200 New Jersey Avenue SE., Washington, DC 20590.
- *Hand Delivery:* U.S. Department of Transportation, Docket Operations, M–30, West Building Ground Floor, Room W12–140, 1200 New Jersey Avenue SE., Washington, DC 20590, between 9 a.m. and 5 p.m., Monday through Friday, except Federal holidays.

For service information identified in this AD, contact Goodyear Aviation, ATTN: Richard McKenna—Product Support Manager (North America), 100 Business Center Drive, Stockbridge, GA 30281; phone: (678) 364–8956; fax: (678) 284–6101; email: *rich_mckenna@goodyear.com;* Internet: *www.goodyearaviation.com.* You may review copies of the referenced service information at the FAA, Small Airplane Directorate, 901 Locust, Kansas City, Missouri 64106. For information on the availability of this material at the FAA, call (816) 329–4148.

Examining the AD Docket

You may examine the AD docket on the Internet at *http://www.regulations.gov;* or in person at the Docket Management Facility between 9 a.m. and 5 p.m., Monday through Friday, except Federal holidays. The AD docket contains this AD, the regulatory evaluation, any comments received, and other information. The street address for the Docket Office (telephone (800) 647–5527) is in the **ADDRESSES** section. Comments will be available in the AD docket shortly after receipt.

FOR FURTHER INFORMATION CONTACT: Samuel Belete, Aerospace Engineer, FAA, Atlanta Aircraft Certification Office, 1701 Columbia Avenue, College

Park, Georgia 30337; phone: (404) 474–5580; fax: (404) 474–5606; email: *samuel.belete@faa.gov.*

SUPPLEMENTARY INFORMATION:

Discussion

The Agência Nacional de Aviação Civil (ANAC), which is the aviation authority for Brazil, has issued Brazilian Airworthiness Directive 2012–05–01, dated June 5, 2012 (referred to after this as ''the MCAI''), to correct an unsafe condition for the specified products. The MCAI states:

> This AD was prompted by reports of tread separations and tread-area bulges on the main landing gear tire. The ANAC is issuing this AD to prevent tread separation from the main landing gear tire during takeoff or landing, which could result in structural damage to the airplane, damage to the flaps, engine, wheel well, and consequent reduced controllability of the airplane on the runway or in the air.

The MCAI requires replacing all affected tires and prohibits any future installation of the affected tires. You may obtain further information by examining the MCAI in the AD docket.

Relevant Service Information

Goodyear Aviation has issued Service Bulletin 2012–32–001, dated April 19, 2012. The actions described in this service information are intended to correct the unsafe condition identified in the MCAI.

FAA's Determination and Requirements of the AD

This product has been approved by the aviation authority of another country, and is approved for operation in the United States. Pursuant to our bilateral agreement with this State of Design Authority, they have notified us of the unsafe condition described in the MCAI and service information referenced above. We are issuing this AD because we evaluated all information provided by the State of Design Authority and determined the unsafe condition exists and is likely to exist or develop on other products of the same type design.

FAA's Determination of the Effective Date

An unsafe condition exists that requires the immediate adoption of this AD. The FAA has found that the risk to the flying public justifies waiving notice and comment prior to adoption of this rule because failure of the main landing gear tires during takeoff or landing could cause damage to the airplane structure, flaps, engine, wheel well and may result in reduced controllability of the airplane. Therefore, we determined that notice and opportunity for public comment before issuing this AD are impracticable and that good cause exists for making this amendment effective in fewer than 30 days.

Comments Invited

This AD is a final rule that involves requirements affecting flight safety, and we did not precede it by notice and opportunity for public comment. We invite you to send any written relevant data, views, or arguments about this AD. Send your comments to an address listed under the **ADDRESSES** section. Include ''Docket No. FAA–2012–0881; Directorate Identifier 2012–CE–029–AD'' at the beginning of your comments. We specifically invite comments on the overall regulatory, economic, environmental, and energy aspects of this AD. We will consider all comments received by the closing date and may amend this AD because of those comments.

We will post all comments we receive, without change, to *http://www.regulations.gov*, including any personal information you provide. We will also post a report summarizing each substantive verbal contact we receive about this AD.

Costs of Compliance

We estimate that this AD will affect about 3,400 tires potentially installed on products of U.S. registry. We also estimate that it would take about 3 work-hours per product to comply with the basic requirements of this AD. The average labor rate is $85 per work-hour. Required parts would cost about $2,000 per product.

Based on these figures, we estimate the cost of the AD on U.S. operators to be $7,667,000, or $2,255 per product.

According to the manufacturer, some of the costs of this AD may be covered on a one-to-one basis as noted in Goodyear Aviation Service Bulletin 2012–32–001, dated April 19, 2012, thereby reducing the cost impact on affected individuals. We do not control warranty or exchange coverage for affected operators. As a result, we have included all costs in our cost estimate.

Authority for This Rulemaking

Title 49 of the United States Code specifies the FAA's authority to issue rules on aviation safety. Subtitle I, section 106, describes the authority of the FAA Administrator. ''Subtitle VII: Aviation Programs,'' describes in more detail the scope of the Agency's authority.

We are issuing this rulemaking under the authority described in ''Subtitle VII, Part A, Subpart III, Section 44701: General requirements.'' Under that section, Congress charges the FAA with promoting safe flight of civil aircraft in air commerce by prescribing regulations for practices, methods, and procedures the Administrator finds necessary for safety in air commerce. This regulation is within the scope of that authority because it addresses an unsafe condition that is likely to exist or develop on products identified in this rulemaking action.

Regulatory Findings

We determined that this AD will not have federalism implications under Executive Order 13132. This AD will not have a substantial direct effect on the States, on the relationship between the national government and the States, or on the distribution of power and responsibilities among the various levels of government.

For the reasons discussed above, I certify that this AD:

(1) Is not a ''significant regulatory action'' under Executive Order 12866,

(2) Is not a ''significant rule'' under the DOT Regulatory Policies and Procedures (44 FR 11034, February 26, 1979),

(3) Will not affect intrastate aviation in Alaska, and

(4) Will not have a significant economic impact, positive or negative, on a substantial number of small entities under the criteria of the Regulatory Flexibility Act.

List of Subjects in 14 CFR Part 39

Air transportation, Aircraft, Aviation safety, Incorporation by reference, Safety.

Adoption of the Amendment

Accordingly, under the authority delegated to me by the Administrator, the FAA amends 14 CFR part 39 as follows:

PART 39—AIRWORTHINESS DIRECTIVES

■ 1. The authority citation for part 39 continues to read as follows:

Authority: 49 U.S.C. 106(g), 40113, 44701.

§ 39.13 [Amended]

■ 2. The FAA amends § 39.13 by adding the following new AD:

2012–17–01 Goodyear Aviation Tires: Amendment 39–17164; Docket No. FAA–2012–0881; Directorate Identifier 2012–CE–029–AD.

(a) Effective Date

This airworthiness directive (AD) becomes effective September 13, 2012.

(b) Affected ADs

None.

(c) Applicability

This AD applies to the following new Goodyear Aviation Tires (retreads are not affected by this AD), installed on various transport category airplanes, including but not limited to Bombardier, Inc. Model CL–600–2B19 airplanes:

(1) New tire part number (P/N) 299K63–1 with the following specifications:

(i) Tire size: H29x9.0–15;

(ii) Ply rating: 16PR; and

(iii) Speed rating: 210 miles per hour.

(2) Serial numbers (S/N) 01867xxx through 02737xxx with the following specifications:

(i) The 5th digit of the serial number must be a ''7''; and

(ii) ''XXX'' can be any combination of three single digit numbers.

(d) Subject

Air Transport Association of America (ATA) Code 32: Landing gear.

(e) Reason

This AD was prompted by mandatory continuing airworthiness information (MCAI) issued by the aviation authority of another country to identify and correct an unsafe condition on an aviation product. The MCAI describes the unsafe condition as tire tread separations and tread-area bulges on the main landing gear tires due to low adhesion in the tread should area. We are issuing this AD to prevent failure of the main landing gear tires during takeoff or landing, which could cause damage to the airplane structure, flaps, engine, and wheel well and result in reduced controllability of the airplane.

(f) Actions and Compliance

Unless already done, do the following actions in accordance with Goodyear Aviation Service Bulletin 2012–32–001, dated April 19, 2012.

(1) Within the next 5 flight cycles (landings) after September 13, 2012 (the effective date of this AD), inspect the main landing gear tires, P/N 299K63–1, to determine if an affected S/N tire, as specified in paragraph (c) of this AD, is installed. A review of the airplane maintenance records is acceptable in lieu of this inspection if the P/N and S/N of the tires installed can be positively determined from that review. Operators that do not maintain landing records can determine the number of landings by dividing the number of airplane hours time-in-service (TIS) by two.

(2) Before further flight after the inspection required in paragraph (f)(1) of this AD, replace any tire that has an affected serial number.

(3) As of September 13, 2012 (the effective date of this AD), do not install any main landing gear tire, P/N 299K63–1, that has an affected serial number specified in paragraph (c)(2) of this AD.

(g) Other FAA AD Provisions

The following provisions also apply to this AD:

(1) *Alternative Methods of Compliance (AMOCs):* The Manager, Atlanta Aircraft Certification Office (ACO), FAA, has the authority to approve AMOCs for this AD, if requested using the procedures found in 14 CFR 39.19. Send information to ATTN: Samuel Belete, Aerospace Engineer, FAA, Atlanta ACO, 1701 Columbia Avenue, College Park, Georgia 30337; phone: (404) 474–5580; fax: (404) 474–5606; email: *samuel.belete@faa.gov.* Before using any approved AMOC on any airplane to which the AMOC applies, notify your appropriate principal inspector (PI) in the FAA Flight Standards District Office (FSDO), or lacking a PI, your local FSDO.

(2) *Airworthy Product:* For any requirement in this AD to obtain corrective actions from a manufacturer or other source, use these actions if they are FAA-approved. Corrective actions are considered FAA-approved if they are approved by the State of Design Authority (or their delegated agent). You are required to assure the product is airworthy before it is returned to service.

(3) *Reporting Requirements:* For any reporting requirement in this AD, a federal agency may not conduct or sponsor, and a person is not required to respond to, nor shall a person be subject to a penalty for failure to comply with a collection of information subject to the requirements of the Paperwork Reduction Act unless that collection of information displays a current valid OMB Control Number. The OMB Control Number for this information collection is 2120–0056. Public reporting for this collection of information is estimated to be approximately 5 minutes per response, including the time for reviewing instructions, completing and reviewing the collection of information. All responses to this collection of information are mandatory. Comments concerning the accuracy of this burden and suggestions for reducing the burden should be directed to the FAA at: 800 Independence Ave. SW., Washington, DC 20591, Attn: Information Collection Clearance Officer, AES–200.

(h) Special Flight Permit

We are allowing a one-time special flight permit to return the airplane to a suitable maintenance base provided a detailed inspection of the main landing gear tires is done and no tread separation or bulge is detected.

(i) Related Information

Refer to MCAI Agência Nacional de Aviação Civil (ANAC) Brazilian Airworthiness Directive 2012–05–01, dated June 5, 2012, and Goodyear Aviation Service Bulletin 2012–32–001, dated April 19, 2012, for related information.

(j) Material Incorporated by Reference

(1) The Director of the Federal Register approved the incorporation by reference (IBR) of the service information listed in this paragraph under 5 U.S.C. 552(a) and 1 CFR part 51.

(2) You must use this service information as applicable to do the actions required by this AD, unless the AD specifies otherwise.

(i) Goodyear Aviation Service Bulletin 2012–32–001, dated April 19, 2012.

(ii) Reserved.

(3) For Goodyear Aviation Tires service information identified in this AD, contact Goodyear Aviation, ATTN: Richard McKenna—Product Support Manager (North America), 100 Business Center Drive, Stockbridge, GA 30281; phone: (678) 364–8956; fax: (678) 284–6101; email: *rich_mckenna@goodyear.com.*

(4) You may view this service information at FAA, Small Airplane Directorate, 901 Locust, Kansas City, Missouri 64106. For information on the availability of this material at the FAA, call (816) 329–4148.

(5) You may view this service information that is incorporated by reference at the National Archives and Records Administration (NARA). For information on the availability of this material at NARA, call 202–741–6030, or go to: *http://www.archives.gov/federal-register/cfr/index.html.*

Issued in Kansas City, Missouri, on August 16, 2012.

Earl Lawrence,

Manager, Small Airplane Directorate, Aircraft Certification Service.

[FR Doc. 2012–20696 Filed 8–28–12; 8:45 am]

BILLING CODE 4910–13–P

DEPARTMENT OF TRANSPORTATION

Federal Aviation Administration

14 CFR Part 39

[Docket No. FAA–2011–0360; Directorate Identifier 2010–CE–061–AD; Amendment 39–17023; AD 2012–08–06]

RIN 2120–AA64

Airworthiness Directives; Univair Aircraft Corporation Airplanes

AGENCY: Federal Aviation Administration (FAA), DOT.

ACTION: Final rule.

SUMMARY: We are superseding an existing airworthiness directive (AD) for certain Univair Aircraft Corporation Models (ERCO) 415–C, 415–CD, 415–D, E, G; (Forney) F–1 and F–1A; (Alon) A–2 and A2–A; and (Mooney) M10 airplanes. That AD currently requires an inspection of the aileron balance assembly and ailerons for cracks and excessive looseness of associated parts with the required repair or replacement of defective parts as necessary. This new AD would add airplanes to the Applicability section; require inspections of the ailerons, aileron balance assembly, and aileron rigging for looseness or wear, require repair or replacement of parts as necessary; and require a report of the inspection results. This new AD was prompted by a report of a Univair Aircraft Corporation Model ERCO 415–D Ercoupe that crashed after an in-flight

breakup due to possible aileron flutter. We are issuing this AD to correct the unsafe condition on these products.

DATES: This AD is effective October 3, 2012.

The Director of the Federal Register approved the incorporation by reference of certain publications listed in the AD as of October 3, 2012.

ADDRESSES: For service information identified in this AD, contact Univair Aircraft Corporation, 2500 Himalaya Road, Aurora, Colorado 80011; telephone: (303) 375–8882, fax: (303) 375–8888; Internet: *http://univairparts.com.* You may review copies of the referenced service information at the FAA, Small Airplane Directorate, 901 Locust, Kansas City, Missouri 64106. For information on the availability of this material at the FAA, call (816) 329–4148.

Examining the AD Docket

You may examine the AD docket on the Internet at *http://www.regulations.gov;* or in person at the Docket Management Facility between 9 a.m. and 5 p.m., Monday through Friday, except Federal holidays. The AD docket contains this AD, the regulatory evaluation, any comments received, and other information. The address for the Docket Office (phone: 800–647–5527) is Document Management Facility, U.S. Department of Transportation, Docket Operations, M–30, West Building Ground Floor, Room W12–140, 1200 New Jersey Avenue SE., Washington, DC 20590.

FOR FURTHER INFORMATION CONTACT: Roger Caldwell, Aerospace Engineer, FAA, Denver Aircraft Certification Office, 26805 East 68th Ave., Room 214, Denver, Colorado 80249–6361; telephone: (303) 342–1086; fax: (303) 342–1088; email: *roger.caldwell@faa.gov.*

SUPPLEMENTARY INFORMATION:

Discussion

We issued a notice of proposed rulemaking (NPRM) to amend 14 CFR part 39 to supersede AD 52–02–02 (21 FR 9447, December 4, 1956). That AD applies to the specified products. The NPRM published in the **Federal Register** on April 14, 2011 (76 FR 20894, April 14, 2011). That NPRM proposed to add airplanes to the Applicability section; require inspections of the ailerons, aileron balance assembly, and aileron rigging for looseness or wear; repair or replacement of parts as necessary; and require a report of the inspection results.

Comments

We gave the public the opportunity to participate in developing this AD. The following presents the comments received on the proposal (76 FR 20894, April 14, 2011) and the FAA's response to each comment.

Request To Withdraw NPRM or Change the Inspection Interval

William R. Bayne and Hartmut Beil stated that the service bulletin and/or the manufacturer's existing recommendations, such as lubricating control rod ends at 300 hour intervals, are adequate, and the existing AD 52–02–02 (21 FR 9447, December 4, 1956) is sufficient. They stated that the number of in-flight breakups do not identify a failure of the flight control system and do not justify the need for AD action. They also stated the inspection interval should be 300 hours instead of 100 hours to match the existing recommendations, and the proposed AD puts a financial burden on owners with little or no gain for safety.

We disagree with these comments. This AD will add airplanes to the Applicability section that were not included in AD 52–02–02 (21 FR 9447, December 4, 1956). Also, the flight control free play limits can vary or be out of tolerance for many more reasons than not doing the 300-hour lubrication requirement. Also, varying field reports indicated that the majority of flight control systems are not in tolerance. In addition, Ercoupe Service Memorandum No. 57, Revision A, dated September 1, 2008, recommends free play inspection every 100 hours.

Request To Allow for Credit for the Calibration of the Airspeed Indicator

Linda Abrams requested we change the calibration of the airspeed indicator (ASI) requirement, paragraph (g)(8) of the proposed AD (76 FR 20894, April 14, 2011), to allow for ''unless already done'' credit since that applies to the other inspection requirements, and it would impose a financial burden on owners and operators.

We agree. ''Unless already done'' credit will be applied for the ASI calibration requirement in paragraph (g)(8) of this AD as all other ''unless already done'' credit is being applied by reference to the Compliance section, paragraph (f) of this AD.

Request To Reference Mooney M–10 Service and Maintenance Manual

James E. Dyer of Univair requested the Mooney M–10 service and maintenance requirements be addressed by separate applicable service information since the Ercoupe Service Memorandum No. 57 and 35A, both Revisions A, both dated September 1, 2008, are not applicable to the Mooney M–10.

We agree. We revised the ''Required Actions'' section paragraph (g) of this AD by adding text that requires inspecting and taking corrective action on the Mooney M–10 flight control system per pages 5–1 through 5–4 of the Mooney M–10 Service and Maintenance Manual, Serial Numbers 690001 through 690011 and 700001 and on, Revision A, dated September 1, 2008. We also added Ercoupe Service Memorandum No. 35A, Revision A, dated September 1, 2008, to the applicable service information, and added an area to the reporting requirement pertaining to the use of Ercoupe Service Memorandum No. 35A, Revision A, dated September 1, 2008.

Request To Reference Ercoupe Service Bulletin No. 20 for the Aileron Balance Assembly Requirements

James E. Dyer commented that Ercoupe Service Memorandum No. 20, Revision A, dated September 1, 2008, is only referenced in the one-time reporting requirement of the ''Required Actions'' section, paragraph (g) of the proposed AD and not referenced as a procedural requirement for the inspection of ailerons with counter weights.

We agree. We have revised this AD by adding Ercoupe Service Memorandum No. 20, Revision A, dated September 1, 2008, as a reference in the ''Required Actions'' section, paragraph (g), of this AD pertaining to airplanes with the aileron balance assembly (ERCO part number (P/N) 415–16009).

Request To Require the Airspeed Indicator Calibration To Be Done at an Instrument Repair Facility

James E. Dyer, Linda T. Abrams, and Jack Chmiel commented that the calibration test for the ASI should be completed by an authorized instrument repair facility because Advisory Circular AC 23–8B, Appendix 9 contains technical requirements that exceed the ability of most owner/operators, repair stations, or Airframe & Powerplant (A&P) mechanics on this class of airplane.

We partially agree. We have revised the ''Required Actions'' section, paragraph (g)(8) of this AD to require an FAA-authorized instrument repair facility to calibrate the ASI if the bench test method is used. However we will allow an exception for global positioning system (GPS) or other owner/operator FAA-approved methods of calibrating the ASI following the instructions in FAA Advisory Circular AC 23–8C, Appendix 9, dated

November 16, 2011. These procedures will be repetitively required every 4 years and any time maintenance affects the system integrity.

Request To Make the Reporting Requirement a One-Time Action

Jack Chmiel, William R. Bayne, and an anonymous commenter stated they did not think the Inspection Report should be submitted after each inspection interval. They didn't feel the referenced report was clearly defined in the NPRM as a one-time report that is only required at the time of initial compliance with the AD.

We agree. We have revised this AD to clearly state the reporting requirement is a one-time action submitted after the initial inspection.

Request To Update the P/N "Costs of Compliance"

James E. Dyer commented that there has been a revision to a P/N listed in the "Costs of Compliance" section of this AD, and we should change the P/N.

We agree. We revised this AD to reflect the aileron hinge and rudder hinge P/N from 415–24003 to F24003 in the "Costs of Compliance" section.

Request To Limit the Aileron Free Play

Vince Hammons and Jack Chmiel commented that the aileron free play should be limited to 1/8 inch to 5/16 inch, which they believe would be easily attainable and would remove any confusion on allowable amount of free play.

We do not agree. Ercoupe Service Memorandums No. 56 and No. 57, both Revisions A, both dated September 1, 2008, state that 7/16 inch is allowable for ailerons with counter weights, and 5/16 inch is allowable for ailerons without counter weights per the original design. Anything less could be unattainable due to different wear patterns and usage between airplane units and the services times and duration of the type design for the fleet since inception.

Conclusion

We reviewed the relevant data, considered the comments received, and determined that air safety and the public interest require adopting the AD with the changes described previously and minor editorial changes. We have determined that these minor changes:

- Are consistent with the intent that was proposed in the NPRM (76 FR 20894, April 14, 2011) for correcting the unsafe condition; and
- Do not add any additional burden upon the public than was already proposed in the NPRM (76 FR 20894, April 14, 2011).

We also determined that these changes will not increase the economic burden on any operator or increase the scope of the AD.

Costs of Compliance

We estimate that this AD affects 2,600 airplanes of U.S. registry.

We estimate the following costs to comply with this AD:

ESTIMATED RETAINED COSTS

Action	Labor cost	Parts cost	Cost per product	Cost on U.S. operators
Inspect the ailerons for cracks in the support structure and skin.	4 work-hours × $85 per hour = $340	Not applicable	$340	$884,000

ESTIMATED NEW COSTS

Action	Labor cost	Parts cost	Cost per product	Cost on U.S. operators
Remove load from nose wheel and adjust rigging.	.5 work-hour × $85 per hour = $42.50	Not applicable	$42.50	$110,500

We estimate the following costs to do any necessary replacements for the flight control system that would be required based on the results of the inspection. We have no way of determining the number of airplanes that may need this replacement:

ON-CONDITION COSTS

Action	Labor cost	Parts cost	Cost per product
Install aileron hinge	2 work-hours × $85 per hour = $170	Aileron Hinge Part Number (P/N) F24003 $25	$195
Install elevator hinge	2 work-hours × $85 per hour = $170	Elevator Hinge P/N 415–22007 $40	210
Install elevator hinge	2 work-hours × $85 per hour = $170	Elevator Hinge P/N 415–22008 $83	253
Install rudder hinge	2 work-hours × $85 per hour = $170	Rudder Hinge P/N F24003 $25	195
Install aileron rod-end bearing.	2 work-hours × $85 per hour = $170	Aileron Rod-End Bearing P/N GMM–3M–670 $20	190

Authority for This Rulemaking

Title 49 of the United States Code specifies the FAA's authority to issue rules on aviation safety. Subtitle I, Section 106, describes the authority of the FAA Administrator. Subtitle VII, Aviation Programs, describes in more detail the scope of the Agency's authority.

We are issuing this rulemaking under the authority described in Subtitle VII, Part A, Subpart III, Section 44701, "General requirements." Under that section, Congress charges the FAA with promoting safe flight of civil aircraft in air commerce by prescribing regulations for practices, methods, and procedures the Administrator finds necessary for safety in air commerce. This regulation is within the scope of that authority because it addresses an unsafe condition

that is likely to exist or develop on products identified in this rulemaking action.

Regulatory Findings

We have determined that this AD will not have federalism implications under Executive Order 13132. This AD will not have a substantial direct effect on the States, on the relationship between the national government and the States, or on the distribution of power and responsibilities among the various levels of government.

For the reasons discussed above, I certify that this AD:

(1) Is not a ''significant regulatory action'' under Executive Order 12866,

(2) Is not a ''significant rule'' under DOT Regulatory Policies and Procedures (44 FR 11034, February 26, 1979),

(3) Will not affect intrastate aviation in Alaska, and

(4) Will not have a significant economic impact, positive or negative, on a substantial number of small entities under the criteria of the Regulatory Flexibility Act.

List of Subjects in 14 CFR Part 39

Air transportation, Aircraft, Aviation safety, Incorporation by reference, Safety.

Adoption of the Amendment

Accordingly, under the authority delegated to me by the Administrator, the FAA amends 14 CFR part 39 as follows:

PART 39—AIRWORTHINESS DIRECTIVES

■ 1. The authority citation for part 39 continues to read as follows:

Authority: 49 U.S.C. 106(g), 40113, 44701.

§ 39.13 [Amended]

■ 2. The FAA amends § 39.13 by removing airworthiness directive (AD) 52–02–02, (21 FR 9447, December 4, 1956), and adding the following new AD:

2012–08–06 Univair Aircraft Corporation: Amendment 39–17023; Docket No. FAA–2011–0360; Directorate Identifier 2010–CE–061–AD.

(a) Effective Date

This airworthiness directive (AD) is effective October 3, 2012.

(b) Affected ADs

This AD supersedes AD 52–02–02 (21 FR 9447, December 4, 1956).

(c) Applicability

This AD applies to Univair Aircraft Corporation Models (ERCO) 415–C, 415–CD, 415–D, E, G; (Forney) F–1 and F–1A; (Alon) A–2 and A2–A; and (Mooney) M10 airplanes, all serial numbers, that are certificated in any category.

(d) Subject

Joint Aircraft System Component (JASC)/ Air Transport Association (ATA) of America Code 27, Flight Controls.

(e) Unsafe Condition

This AD was prompted by a Univair Aircraft Corporation Model ERCO 415–D Ercoupe that crashed after an in-flight breakup due to possible aileron flutter. We are issuing this AD to correct the unsafe condition on these products.

(f) Compliance

Comply with this AD within the compliance times specified, unless already done.

(g) Required Actions

TABLE 1 OF PARAGRAPH (G)—REQUIRED ACTIONS

What must be done?	When must it be done?	How it must be done
(1) *For all airplanes:* Inspect the ailerons for cracks in the support structure and skin.	Within the next 25 hours time-in-service (TIS) after October 3, 2012 (the effective date of this AD) or within 3 months after October 3, 2012 (the effective date of this AD), whichever occurs first. Repetitively thereafter inspect at intervals not to exceed 100 hours TIS or 12 months, whichever occurs first.	For all airplanes except the Mooney M–10, follow Ercoupe Service Memorandums No. 56 and 35A, both Revisions A, both dated September 1, 2008. For the Mooney M–10 follow the Mooney M–10 Service and Maintenance Manual, Serial Numbers 690001 through 690011 and 700001 and on, Revision A, dated September 1, 2008, Section V, pages 5–1 through 5–4.
(2) *For airplanes with the aileron balance assembly (ERCO Part Number (P/N) 415–16009) installed:* Inspect the assembly for cracks in the support structure and skin.	Within the next 25 hours TIS after October 3, 2012 (the effective date of this AD) or within 3 months after October 3, 2012 (the effective date of this AD), whichever occurs first. Repetitively thereafter inspect at intervals not to exceed 100 hours TIS or 12 months, whichever occurs first.	Follow Ercoupe Service Memorandums No. 20, 56, and 57, all Revisions A, all dated September 1, 2008; and for Models E and (Forney) F–1 and F–1A, follow Ercoupe Service Memorandum No. 35A, Revision A, dated September 1, 2008.
(3) *For all airplanes:* If any cracking is found during the inspections required in paragraphs (g)(1) and/or (g)(2) of this AD, repair or replace cracked parts.	Before further flight after the inspection where the cracking was found.	Follow Ercoupe Service Memorandums No. 20, 56, and 57, all Revisions A, all dated September 1, 2008; and for Models E and (Forney) F–1 and F–1A, follow Ercoupe Service Memorandum No. 35A, Revision A, dated September 1, 2008.
(4) *For airplanes with the aileron balance assembly (ERCO P/N 415–16009) installed:* Inspect the four No. 6–32 screws that attach the balance weight support to the aileron for looseness and damage.	Within the next 25 hours TIS after October 3, 2012 (the effective date of this AD) or within 3 months after October 3, 2012 (the effective date of this AD), whichever occurs first. Repetitively thereafter inspect at intervals not to exceed 100 hours TIS or 12 months, whichever occurs first.	Follow Ercoupe Service Memorandums No. 20, 56, and 57, all Revisions A, all dated September 1, 2008; and for Models E and (Forney) F–1 and F–1A, follow Ercoupe Service Memorandum No. 35A, Revision A, dated September 1, 2008.
(5) *For all airplanes:* If any looseness or damage is found during the inspection of the screws required in paragraph (g)(4) of this AD, replace the screws with AN 526–632 screws, making sure to not overstress during tightening.	Before further flight after the inspection where the looseness or damage was found.	Follow Ercoupe Service Memorandums No. 20, 56, and 57, all Revisions A, all dated September 1, 2008; and for Models E and (Forney) F–1 and F–1A, follow Ercoupe Service Memorandum No. 35A, Revision A, dated September 1, 2008.

TABLE 1 OF PARAGRAPH (G)—REQUIRED ACTIONS—Continued

What must be done?	When must it be done?	How it must be done
(6) *For airplanes with the aileron balance assembly (ERCO P/N 415–16009) installed:* Inspect the aileron hinges and aileron control system for excessive looseness or wear in hinge pins or bearings. If, with one aileron blocked in the neutral position, the total play of the other aileron, measured at the trailing edge, exceeds 7/16-inch, inspect all the joints and bearings and tighten or replace those which are loose.	Within the next 25 hours TIS after October 3, 2012 (the effective date of this AD) or within 3 months after October 3, 2012 (the effective date of this AD), whichever occurs first. Repetitively thereafter inspect at intervals not to exceed 100 hours TIS or 12 months, whichever occurs first.	Follow Ercoupe Service Memorandums No. 20, 56, and 57, all Revisions A, all dated September 1, 2008; and for Models E and (Forney) F–1 and F–1A, follow Ercoupe Service Memorandum No. 35A, Revision A, dated September 1, 2008.
(7) *For airplanes that do not have the aileron balance assembly (ERCO P/N 415–16009) installed:* Inspect the aileron hinges and aileron control system for excessive looseness or wear in hinge pins or bearings. If, with one aileron blocked in the neutral position the total play of the other aileron, measured at the trailing edge, exceeds 5/16-inch, inspect all the joints and bearings and tighten those which are loose.	Within the next 25 hours TIS after October 3, 2012 (the effective date of this AD) or within 3 months after October 3, 2012 (the effective date of this AD), whichever occurs first.	Follow Ercoupe Service Memorandums No. 20, 56, and 57, all Revisions A, all dated September 1, 2008; and for Models E and (Forney) F–1 and F–1A, follow Ercoupe Service Memorandum No. 35A, Revision A, dated September 1, 2008.
(8) *For all airplanes:* Determine that the airspeed instrument is correctly calibrated and distinctly marked in accordance with the operating limitations.	Within the next 25 hours TIS after October 3, 2012 (the effective date of this AD) or within 3 months after October 3, 2012 (the effective date of this AD), whichever occurs first, and repetitively thereafter every four years, and any time maintenance occurs that affects the system integrity.	For airspeed instrument calibration by bench test method, you must use an FAA-authorized instrument repair facility. For airspeed calibration by global positioning system (GPS) or other owner/operator FAA-approved method, you may follow the instructions in Advisory Circular (AC) AC 23–8C, Appendix 9, dated November 16, 2011. AC 23–8C can be found at: *http://www.airweb.faa.gov/Regulatory_and_Guidance_Library/rgAdvisoryCircular.nsf/0/bc4325ad70e84ff58625795d00635d7c/$FILE/23-8C.pdf.*
(9) *For all airplanes except the Mooney M–10:* Remove load from nose wheel and adjust rigging.	Within the next 25 hours TIS after October 3, 2012 (the effective date of this AD) or within 3 months after October 3, 2012 (the effective date of this AD), whichever occurs first. Repetitively thereafter adjust at intervals not to exceed 100 hours TIS or 12 months, whichever occurs first.	Follow Ercoupe Service Memorandum No. 35, Revised January 6, 2006, and/or Ercoupe Service Memorandum 35A, Revision A, dated September 1, 2008.
(10) *For all airplanes:* Submit a one-time report from the initial inspections and/or actions required in paragraphs (g)(1), (g)(2), (g)(4), (g)(6), (g)(7), (g)(8), and (g)(9) of this AD.	Within 30 days after the initial inspections and/or actions required in paragraphs (g)(1), (g)(2), (g)(4), (g)(6), (g)(7), (g)(8), and (g)(9) of this AD, or 30 days after October 3, 2012 (the effective date of this AD) if you are using the ''unless already done'' credit.	Use the reporting form found in Figure 1 of paragraph (g)(10) of this AD and send the report to the following offices: Roger A. Caldwell, Aerospace Engineer, FAA, ANM–100D, Denver Aircraft Certification Office (ACO), 26805 East 68th Avenue, Room 214, Denver, Colorado 80249–6361; and Univair Aircraft Corporation, 2500 Himalaya Road, Aurora, Colorado 80011.

BILLING CODE 4910–13–P

AD No. 2012-08-06 INSPECTION REPORT			
Airplane model and year of manufacture			
Airplane serial number			
Airplane registration			
Airplane tachometer hours at time of inspection			
Airspeed calibrated and marked per paragraph (g)(8) of this AD?	YES, but no calibration adjustment required.	YES, and calibration was adjusted.	
For Ercoupe Service Memorandum No. 56, Revision A, dated September 1, 2008			
Did aileron system play exceed 7/16 of an inch?	NO	YES, and was adjusted	
Was rudder looseness greater than ¼ of an inch at the trailing edge?	NO	YES, and was adjusted	
Was there elevator motion greater than 3/8 of an inch?	NO	YES, and was adjusted	
Were any other discrepancies noticed during this inspection, to include cracks or loose hinges?			
For Ercoupe Service Memorandum No. 57, Revision A, dated September 1, 2008			
Does the airplane have aileron balance weights?	NO	YES	
If balance weights are installed, were the attachments secure?	NO	YES	
Did you remove the balance weights if allowed?	NO	YES	
If you did not remove balance weights, did you perform Ercoupe Service Memorandum No. 20 (Ailerons-Reinforcement of)	NO	YES	
If balance weights were removed, was the aileron free play 5/16 of an inch or less?	NO	YES	Not applicable

Were any other discrepancies noticed during this inspection?		
For Ercoupe Service Memorandum No. 35, Revised January 1, 2006		
Did you perform steps 1, 2, and 7 of the Ercoupe Service Memorandum No. 35?	NO	YES
Were any other discrepancies noticed during this inspection?		
For Ercoupe Service Memorandum No. 35A, Revision A, dated September 1, 2008		
Did you perform the procedures in Ercoupe Service Memorandum No. 35A?	NO	YES
Were any other discrepancies noticed during this inspection?		
For Mooney M-10 Service and Maintenance Manual, Revision A, dated September 1, 2008		
Have you performed the inspections outlined in the Mooney M-10 Service and Maintenance Manual, Serial Numbers 690001 through 690011 and 700001 and on, Section V pages 5-1 through 5-4?	NO	YES
Were any other discrepancies noticed during this inspection?		
Send report to: Roger A. Caldwell, Aerospace Engineer, FAA, ANM-100D, Denver ACO, 26805 East 68th Avenue, Room 214, Denver, Colorado 80249-6361; *fax:* (303) 342-1088; *email:* roger.caldwell@faa.gov; and Univair Aircraft Corporation, 2500 Himalaya Road, Aurora, Colorado 80011		

Figure 1 of paragraph (g)(10) of this AD "Reporting Form"

BILLING CODE 4910–13–C

(h) Paperwork Reduction Act Burden Statement

A federal agency may not conduct or sponsor, and a person is not required to respond to, nor shall a person be subject to a penalty for failure to comply with a collection of information subject to the requirements of the Paperwork Reduction Act unless that collection of information displays a current valid OMB Control Number. The OMB Control Number for this information collection is 2120–0056. Public reporting for this collection of information is estimated to be approximately 5 minutes per response, including the time for reviewing instructions, completing and reviewing the collection of information. All responses to this collection of information are mandatory. Comments concerning the accuracy of this burden and suggestions for reducing the burden should be directed to the FAA at: 800 Independence Ave. SW., Washington, DC

20591, Attn: Information Collection Clearance Officer, AES–200.

(i) Alternative Methods of Compliance (AMOCs)

(1) The Manager, Denver ACO, FAA, has the authority to approve AMOCs for this AD, if requested using the procedures found in 14 CFR 39.19. In accordance with 14 CFR 39.19, send your request to your principal inspector or local Flight Standards District Office, as appropriate. If sending information directly to the manager of the ACO, send it to the attention of the person identified in the Related Information section of this AD.

(2) Before using any approved AMOC, notify your Principal Maintenance Inspector or Principal Avionics Inspector, as appropriate, or lacking a principal inspector, your local Flight Standards District Office.

(3) AMOCs approved for AD 52–02–02 (21 FR 9447, December 4, 1956) are approved as AMOCs for this AD.

(j) Related Information

For more information about this AD, contact Roger Caldwell, Aerospace Engineer, FAA, Denver ACO, 26805 East 68th Ave., Room 214, Denver, Colorado 80249–6361; telephone: (303) 342–1086; fax: (303) 342–1088; email: *roger.caldwell@faa.gov.*

(k) Material Incorporated by Reference

(1) The Director of the Federal Register approved the incorporation by reference (IBR) of the service information listed in this paragraph under 5 U.S.C. 552(a) and 1 CFR part 51.

(2) You must use this service information as applicable to do the actions required by this AD, unless the AD specifies otherwise.

(i) Ercoupe Service Memorandum No. 56, Revision A, dated September 1, 2008;

(ii) Ercoupe Service Memorandum No. 57, Revision A, dated September 1, 2008;

(iii) Ercoupe Service Memorandum No. 35, revised January 6, 2006;

(iv) Ercoupe Service Memorandum No. 35A, Revision A, dated September 1, 2008;

(v) Ercoupe Service Memorandum No. 20, Revision A, dated September 1, 2008; and

(vi) Mooney M–10 Service and Maintenance Manual, Serial Numbers 690001 through 690011 and 700001 and on, Section V, pages 5–1 through 5–4, Revision A, dated September 1, 2008.

Note for paragraph (k)(2)(i), (k)(2)(ii), (k)(2)(iv), (k)(2)(v), and (k)(2)(vi) of this AD: The only change in Revision A of the above listed service information was to add dates to the previously undated service information.

(3) For Univair Aircraft Corporation service information identified in this AD, contact Univair Aircraft Corporation, 2500 Himalaya Road, Aurora, Colorado 80011; telephone: (303) 375–8882, facsimile: (303) 375–8888; Internet: *http://univairparts.com.*

(4) You may view this service information at FAA, Small Airplane Directorate, 901 Locust St., Kansas City, MO 64106. For information on the availability of this material at the FAA, call (816) 329–4148.

(5) You may view this service information that is incorporated by reference at the National Archives and Records Administration (NARA). For information on the availability of this material at NARA, call 202–741–6030, or go to: *http://www.archives.gov/federal-register/cfr/index.html.*

Issued in Kansas City, Missouri, on August 16, 2012.

Earl Lawrence,

Manager, Small Airplane Directorate, Aircraft Certification Service.

[FR Doc. 2012–21018 Filed 8–28–12; 8:45 am]

BILLING CODE 4910–13–P

DEPARTMENT OF TRANSPORTATION

Federal Aviation Administration

14 CFR Part 39

[Docket No. FAA–2011–1326; Directorate Identifier 2010–NM–177–AD; Amendment 39–17144; AD 2012–15–15]

RIN 2120–AA64

Airworthiness Directives; The Boeing Company Airplanes

AGENCY: Federal Aviation Administration (FAA), DOT.

ACTION: Final rule.

SUMMARY: We are superseding an existing airworthiness directive (AD) for certain The Boeing Company Model 757–200, –200CB, and –300 series airplanes. That AD currently requires initial and repetitive inspections of the fuselage skin and bear strap at the forward, upper corner of the L1 entry door cutout for cracking, and repair if necessary. That action also provides an optional terminating action for the repetitive inspections. This new AD requires additional inspections for airplanes having repairs or preventative modifications installed and inspections for certain other airplanes. This AD also adds airplanes to the applicability. This AD was prompted by reports of additional cracking in the fuselage skin. We are issuing this AD to detect and correct cracking of the fuselage skin and bear strap at the forward upper corner of the L1 entry door cutout, which could result in reduced structural integrity of the L1 entry door, and consequent rapid decompression of the airplane.

DATES: This AD is effective October 3, 2012.

The Director of the Federal Register approved the incorporation by reference of a certain publication listed in the AD as of October 3, 2012.

The Director of the Federal Register approved the incorporation by reference of a certain other publication listed in this AD as of May 24, 2004 (69 FR 25481, May 7, 2004).

ADDRESSES: For service information identified in this AD, contact Boeing Commercial Airplanes, Attention: Data & Services Management, P. O. Box 3707, MC 2H–65, Seattle, Washington 98124–2207; telephone 206–544–5000, extension 1; fax 206–766–5680; Internet *https://www.myboeingfleet.com.* You may review copies of the referenced service information at the FAA, Transport Airplane Directorate, 1601 Lind Avenue SW., Renton, Washington. For information on the availability of this material at the FAA, call 425–227–1221.

Examining the AD Docket

You may examine the AD docket on the Internet at *http://www.regulations.gov;* or in person at the Docket Management Facility between 9 a.m. and 5 p.m., Monday through Friday, except Federal holidays. The AD docket contains this AD, the regulatory evaluation, any comments received, and other information. The address for the Docket Office (phone: 800–647–5527) is Document Management Facility, U.S. Department of Transportation, Docket Operations, M–30, West Building Ground Floor, Room W12–140, 1200 New Jersey Avenue SE., Washington, DC 20590.

FOR FURTHER INFORMATION CONTACT: Nancy Marsh, Aerospace Engineer, Airframe Branch, ANM–120S, FAA, Seattle Aircraft Certification Office, 1601 Lind Avenue SW., Renton, Washington 98057–3356; phone: 425–917–6440; fax: 425–917–6590; email: *nancy.marsh@faa.gov.*

SUPPLEMENTARY INFORMATION:

Discussion

We issued a notice of proposed rulemaking (NPRM) to amend 14 CFR part 39 to supersede AD 2004–09–32, Amendment 39–13622 (69 FR 25481, May 7, 2004). That AD applies to the specified products. The NPRM published in the **Federal Register** on December 29, 2011 (76 FR 81890). That NPRM proposed to continue to require initial and repetitive inspections of the fuselage skin and bear strap at the forward upper corner of the L1 entry door cutout for cracking, and repair if necessary. That NPRM also provided an optional terminating action for the repetitive inspections. That NPRM also proposed to require additional inspections for airplanes having repairs or preventative modifications installed and inspections for certain other airplanes. That NPRM also proposed to add airplanes to the applicability.

Comments

We gave the public the opportunity to participate in developing this AD. The

following presents the comments received on the proposal (76 FR 81890, December 29, 2011) and the FAA's response to each comment.

Request To Add Compliance Time for Group 2 Airplanes

Allegiant Air requested that we revise paragraph (k) of the NPRM (76 FR 81890, December 29, 2011) to include a 90-day compliance time for airplanes in Group 2. The commenter stated that Boeing Special Attention Service Bulletin 757–53–0094, Revision 1, dated August 12, 2009, specifies a compliance time after the ''original issue date'' or ''Revision 1 date of the service bulletin.'' Allegiant Air stated that Group 2 airplanes may have accumulated more than 500 flight cycles since August 12, 2009 (the issue date of Boeing Special Attention Service Bulletin 757–53–0094, Revision 1), and therefore airplanes would be non-compliant with the AD as soon as the AD is published.

We partially agree with the commenter. We disagree with adding a 90-day compliance time because paragraph (p)(1) of the AD includes an exception to the compliance times that refers to the dates in Boeing Special Attention Service Bulletin 757–53–0094, Revision 1, dated August 12, 2009. However, we have clarified paragraph (k) of this AD by referring to paragraph (p)(1) of this AD as an exception to the compliance times. We have also revised the language in paragraph (p)(1) of this AD for clarity.

Request To Change Repetitive Intervals

American Airlines (AAL) and United Airlines (United) requested that we extend the repetitive intervals. AAL requested that we change the repetitive intervals specified in paragraphs (h) and (k) of the NPRM (76 FR 81890, December 29, 2011) from 1,400 flight cycles to 2,200 flight cycles. AAL stated that they have inspected over 50 percent of its fleet prior to the effective date of the NPRM, and have had no findings. AAL believes that the repetitive interval could be extended without jeopardizing safety. United requested that we lengthen the interval of the repetitive inspections from 1,400 flight cycles to 3,000 flight cycles, to align with normally scheduled maintenance. United also noted that other areas of the airplane fuselage skin shown in the Boeing structural repair manual (SRM) have intervals as long as 3,000 flight cycles.

We disagree with changing the repetitive interval as requested. A damage tolerance analysis of the predicted crack growth rate is used to establish the repetitive intervals of 1,400 flight cycles. These repetitive intervals must include the variability of crack growth rate between airplanes and include a probability of detection of the cracks for the method used for the inspection. The door surround structure appears to have higher stress levels than the other portions of the fuselage skin inspected by the repairs in the Boeing SRM. This is the main cause for the fatigue cracking addressed by Boeing Special Attention Service Bulletin 757–53–0094, Revision 1, dated August 12, 2009. The other areas of fuselage skin in the Boeing SRM have not demonstrated this premature fatigue cracking requiring the higher repetitive inspection intervals. We have determined that the 1,400 flight cycle interval is necessary to address the identified unsafe condition. No change has been made to this AD in this regard; however, operators may request an alternative method of compliance (AMOC) according to the provision of paragraph (r) of this AD, if the request is submitted with substantiating data that proves the repetitive interval will provide an adequate level of safety.

Request To Add Option for Repetitive Inspection Intervals

AAL requested that we revise the 1,400 flight cycle intervals for the eddy current inspection to include an option for a 1,000 flight cycle detailed inspection combined with a 3,000 flight cycle eddy current inspection to permit the eddy current inspections to be accomplished during normally scheduled maintenance intervals.

We disagree. Since no analysis was provided to demonstrate that the proposal provides an acceptable level of safety, we disagree with adding the requested option. It is unlikely that an analysis would demonstrate that the requested 1,000 flight cycle detailed inspections are adequate compared to the probability of detection by the eddy current inspections at 1,400 flight cycles, since the eddy current inspection methods are used to find very small cracks not readily detected by the human eye. Further, the inspections of the bear strap structure cannot be accomplished visually since the bear strap is covered by the fuselage skin. According to the provisions of paragraph (r) of this AD, operators may request an AMOC to include an option to the repetitive inspection intervals, if the request is submitted with substantiating data that proves that the alternate method and intervals will provide an adequate level of safety. No change has been made to this AD in this regard.

Request To Revise Compliance Time

United requested that we revise the compliance time to increase the time allowed after the effective date from 500 flight cycles to 1,400 flight cycles. United stated that it would be a better transition for implementation of the inspections as 1,400 flight cycles would permit normal scheduling for the airplanes.

We disagree with revising the compliance time. In developing an appropriate compliance time for this AD, we considered not only the safety implications, but the manufacturer's recommendations, the availability of required parts, and the practical aspect of accomplishing the inspections within an interval of time that corresponds to typical scheduled maintenance for affected operators. Under the provisions of paragraph (r) of this AD, however, we may consider requests for adjustments to the compliance time if data are submitted to substantiate that such an adjustment would provide an acceptable level of safety.

Request Credit for Repetitive Inspections Defined in Figure 1 of Boeing Special Attention Service Bulletin 757–53–0089, Dated March 18, 2004

Delta Airlines, Inc. (Delta) requested that we revise the NPRM (76 FR 81890, December 29, 2011) to give credit for the inspections done using Figure 1 of Boeing Special Attention Service Bulletin 757–53–0089, dated March 18, 2004. This service bulletin is the appropriate source of service information for accomplishing the actions required by AD 2004–09–32, Amendment 39–13622 (69 FR 25481, May 7, 2004). Delta stated that the new inspections would be required in less than 500 flight cycles after the effective date of the new AD for airplanes that were already on the 1,400 flight cycle repetitive inspection required by AD 2004–09–32.

We disagree with this request to revise this AD. The inspections specified in Figure 1 in both Boeing Special Attention Service Bulletin 757–53–0089, dated March 18, 2004; and Boeing Special Attention Service Bulletin 757–53–0094, Revision 1, dated August 12, 2009; are the same method, locations, and sections of the Boeing 757 Non-destructive Testing Manual. Since paragraph (f) of this AD already provides credit for previous accomplishment of the inspection, no change has been made to the AD in this regard.

Request To Revise Applicability

UPS requested that we revise paragraph (c) of the NPRM (76 FR 81890, December 29, 2011) to add the text, ''as specified in Boeing Special Attention Service Bulletin 757–53–0094, Revision 1, dated August 12, 2009.'' UPS stated that the NPRM is applicable to all Model 757–200 airplanes.

We agree to clarify the applicability paragraph. All Model 757–200, –200CB, and –300 series airplanes are affected by this AD, as specified in paragraph (c) of this AD. Model 757–200PF airplanes are not listed in the applicability and are not affected by the identified unsafe condition. We have clarified paragraph (c) of this AD by adding a sentence that specifies that Model 757–200PF series airplanes are not affected by this AD.

Request To Clarify Paragraph (g)(3) of the NPRM (76 FR 81890, December 29, 2011)

Boeing requested that we clarify paragraph (g)(3) of the NPRM (76 FR 81890, December 29, 2011) by adding the text, ''around each fastener of the subject door edge corner for cracking,'' to be consistent with paragraphs (g)(1) and (g)(2) of the NPRM.

We disagree with the request. Boeing Special Attention Service Bulletin 757–53–0094, Revision 1, dated August 12, 2009, clearly defines the inspection. No change has been made to the AD in this regard.

Request To Clarify Access Steps

AAL requested that we add a statement to clarify the steps required to access the inspection area. AAL stated that this note is included in many Boeing service bulletins, but was not included in Boeing Special Attention Service Bulletin 757–53–0094, dated January 16, 2008; or Boeing Special Attention Service Bulletin 757–53–0094, Revision 1, dated August 12, 2009.

We agree that clarification is needed. We have added paragraph (p)(6) to this AD to state that if it is necessary to remove more parts for access, you may remove those parts, but it is not necessary to remove all of the parts. We have also added a reference to paragraph (p)(6) in paragraph (k) of this AD.

Request To Clarify Paragraph (n) of the NPRM (76 FR 81890, December 29, 2011)

Boeing requested that we clarify paragraph (n) of the NPRM (76 FR 81890, December 29, 2011) by revising the text from, ''a repair doubler, tripler, or quadrupler is installed;'' to ''a repair doubler; a doubler and a tripler; or a doubler, tripler, and quadrupler.'' Boeing stated that a tripler installation also has a doubler installed, and a quadrupler installation also has a doubler and a tripler installed. Each combination has unique inspection requirements.

We agree that the requested text would provide clarity to the operators. Paragraph (n) of this AD has been revised to include the text, ''a repair doubler; a doubler and a tripler; or a doubler, tripler, and quadrupler.''

Request To Revise Compliance Time Exceptions

Delta requested that the exceptions to certain compliance times in paragraph (p)(2) of the NPRM (76 FR 81890, December 29, 2011), be revised to include a third option of 4,000 flight cycles since installation of the preventive modification or repair. Delta stated that, by adding a third criteria of 4,000 flight cycles after installation, the inspection would be required at the next repetitive interval.

We agree that an optional compliance time is needed. In the case of an airplane that has more than 37,500 total flight cycles and has had the modification or the required repair installed more than 24 months after the effective date of the AD, the inspections would be required immediately. We have added paragraph (p)(2)(iii) to this AD to add an optional compliance time of 4,000 flight cycles since installation of the preventive modification or repair.

Request To Permit Fastener and Material Substitution

AAL requested that the NPRM (76 FR 81890, December 29, 2011) be revised to allow substitution of certain fasteners and materials as specified in Chapter 51 of the Boeing 757 SRM and Boeing Drawing 65–88700.

We partially agree with the request. We disagree because Boeing Drawing 65–88700 is not an FAA-approved document. However, we agree that the Boeing 757 SRM, which is an FAA-approved document, is an appropriate source of information for fastener and material substitution. We have added paragraph (p)(4) to this AD to allow fasteners and material to be substituted, as specified in Chapter 51 of the Boeing 757 SRM to be used as an appropriate source of information for fastener and material substitution. We have also revised paragraphs (l) and (m) of this AD to refer to this exception.

Request To Permit Fastener Grip Length Adjustment Substitution

AAL requested that we permit fastener grip length adjustment substitution and washer installation for fastener grip length, as specified in Chapter 51 of the Boeing 757 SRM.

We agree that Chapter 51 of the Boeing 757 SRM is an appropriate source for fastener grip length adjustment substitution. We have added paragraph (p)(5) to this AD to allow Chapter 51 of the Boeing 757 SRM to be used as an appropriate source of information for fastener grip length adjustment substitutions. We have also revised paragraphs (l) and (m) of this AD to refer to this exception.

Request To Allow Credit for Previous Inspections

AAL requested that we allow credit for inspections done previously using Boeing Special Attention Service Bulletin 757–53–0094, dated January 16, 2008.

We agree. We have added paragraph (q) to this AD to allow the inspections for airplanes in Group 1, Configurations 1 and 2; and Group 2, Configuration 1; as defined in Boeing Special Attention 757–53–0094, Revision 1, dated August 12, 2009, done prior to the effective date of this AD, if done using Boeing Special Attention Service Bulletin 757–53–0094, dated January 16, 2008. We have also updated subsequent paragraph identifiers accordingly.

Other Changes Made to This AD

We have revised certain headings throughout this AD. We have also revised paragraph (h) of this AD to specify that the repair in paragraph (i) of this AD also terminates the repetitive inspections.

Conclusion

We reviewed the relevant data, considered the comments received, and determined that air safety and the public interest require adopting the AD with the changes described previously and minor editorial changes. We have determined that these minor changes:

- Are consistent with the intent that was proposed in the NPRM (76 FR 81890, December 29, 2011) for correcting the unsafe condition; and
- Do not add any additional burden upon the public than was already proposed in the NPRM (76 FR 81890, December 29, 2011).

We also determined that these changes will not increase the economic burden on any operator or increase the scope of the AD.

Costs of Compliance

We estimate that this AD affects 591 airplanes of U.S. registry.

We estimate the following costs to comply with this AD:

ESTIMATED COSTS

Action	Work-hours	Average labor rate per hour	Cost per airplane	Number of U.S.-registered airplanes	Fleet cost
Inspections (retained actions from existing AD 2004–09–32, Amendment 39–13622 (69 FR 25481, May 7, 2004)).	2	$85	$170 per inspection cycle	57	$9,690 per inspection cycle.
Inspection (new action)	3	85	$255 per inspection cycle	591	$150,705 per inspection cycle.
Inspection (new action)	15	85	$1,275 per inspection cycle ..	591	$753,525 per inspection cycle.

We estimate the following costs to do any necessary repairs that would be required based on the results of the inspections. We have no way of determining the number of aircraft that might need these repairs:

ON-CONDITION COSTS

Action	Labor cost	Parts cost	Cost per product
Repair	Up to 26 work-hours × $85 = Up to $2,210.	Up to $2,661	Up to $4,871 depending on configuration.
Preventive modification	18 work-hours × $85 = $1,530	$1,338	$2,868

Authority for This Rulemaking

Title 49 of the United States Code specifies the FAA's authority to issue rules on aviation safety. Subtitle I, Section 106, describes the authority of the FAA Administrator. Subtitle VII, Aviation Programs, describes in more detail the scope of the Agency's authority.

We are issuing this rulemaking under the authority described in Subtitle VII, Part A, Subpart III, Section 44701, ''General requirements.'' Under that section, Congress charges the FAA with promoting safe flight of civil aircraft in air commerce by prescribing regulations for practices, methods, and procedures the Administrator finds necessary for safety in air commerce. This regulation is within the scope of that authority because it addresses an unsafe condition that is likely to exist or develop on products identified in this rulemaking action.

Regulatory Findings

We have determined that this AD will not have federalism implications under Executive Order 13132. This AD will not have a substantial direct effect on the States, on the relationship between the national government and the States, or on the distribution of power and responsibilities among the various levels of government.

For the reasons discussed above, I certify that this AD:

(1) Is not a ''significant regulatory action'' under Executive Order 12866,

(2) Is not a ''significant rule'' under DOT Regulatory Policies and Procedures (44 FR 11034, February 26, 1979),

(3) Will not affect intrastate aviation in Alaska, and

(4) Will not have a significant economic impact, positive or negative, on a substantial number of small entities under the criteria of the Regulatory Flexibility Act.

List of Subjects in 14 CFR Part 39

Air transportation, Aircraft, Aviation safety, Incorporation by reference, Safety.

Adoption of the Amendment

Accordingly, under the authority delegated to me by the Administrator, the FAA amends 14 CFR part 39 as follows:

PART 39—AIRWORTHINESS DIRECTIVES

■ 1. The authority citation for part 39 continues to read as follows:

Authority: 49 U.S.C. 106(g), 40113, 44701.

§ 39.13 [Amended]

■ 2. The FAA amends § 39.13 by removing airworthiness directive (AD) 2004–09–32, Amendment 39–13622 (69 FR 25481, May 7, 2004), and adding the following new AD:

2012–15–15 The Boeing Company: Amendment 39–17144; Docket No. FAA–2011–1326; Directorate Identifier 2010–NM–177–AD.

(a) Effective Date

This airworthiness directive (AD) is effective October 3, 2012.

(b) Affected ADs

This AD supersedes AD 2004–09–32, Amendment 39–13622 (69 FR 25481, May 7, 2004).

(c) Applicability

This AD applies to all The Boeing Company Model 757–200, –200CB, and –300 series airplanes, certificated in any category. Model 757–200PF series airplanes are not affected by this AD.

(d) Subject

Joint Aircraft System Component (JASC)/ Air Transport Association (ATA) of America Code 53: Fuselage.

(e) Unsafe Condition

This AD was prompted by reports of additional cracking in the fuselage skin and bear strap at the forward upper corner of the L1 entry door cutout. We are issuing this AD to detect and correct cracking of the fuselage skin and bear strap at the forward upper corner of the L1 entry door cutout, which could result in reduced structural integrity of the L1 entry door, and consequent rapid decompression of the airplane.

(f) Compliance

Comply with this AD within the compliance times specified, unless already done.

(g) Retained Initial Inspections

This paragraph restates the requirements of paragraph (a) of AD 2004–09–32, Amendment 39–13622 (69 FR 25481, May 7, 2004), with a new terminating action. For airplanes having line numbers 1 through 90 inclusive: Within 500 flight cycles after May 24, 2004 (the effective date of AD 2004–09–32), or within 90 days after May 24, 2004 (the effective date of AD 2004–09–32), whichever occurs later, do the inspections of the forward upper corner of the L1 entry door cutout specified in paragraphs (g)(1), (g)(2), and (g)(3) of this AD, per Part 1 of the Work Instructions of Boeing Special Attention Service Bulletin 757–53–0089, dated March 18, 2004, until the initial inspection required by paragraph (k) of this AD has been done. Doing the repair specified in paragraph (i) or (l) of this AD, or doing the preventive modification specified in paragraph (j) of this AD, terminates the inspections required by this paragraph.

(1) Do a high frequency eddy current (HFEC) inspection for cracking of the fuselage skin around the adjacent fasteners.

(2) Do an HFEC inspection for cracking along the edge of the skin and bear strap.

(3) Do a low frequency eddy current (LFEC) inspection for cracking of the bear strap around each fastener.

(h) Retained: Repetitive Inspections and New Terminating Modification When No Crack Is Detected

This paragraph restates the requirements of paragraph (b) of AD 2004–09–32, Amendment 39–13622 (69 FR 25481, May 7, 2004), with a new terminating modification. If no crack is detected during any inspection required by paragraph (g) of this AD: Repeat the inspections required by paragraph (g) of this AD at intervals not to exceed 1,400 flight cycles, until the requirements of paragraph (k) of this AD are done. Doing the repair specified in paragraph (i) or (l) of this AD, or doing the preventive modification specified in paragraph (j) of this AD, as applicable, terminates the repetitive inspections required by this paragraph.

(i) Retained: Repair, With New Repair Option When Any Crack Is Detected

This paragraph restates the requirements of paragraph (c) of AD 2004–09–32, Amendment 39–13622 (69 FR 25481, May 7, 2004), with a new repair option. If any crack is detected during any inspection required by paragraph (g) or (h) of this AD, and Boeing Special Attention Service Bulletin 757–53–0089, dated March 18, 2004, specifies to contact Boeing for appropriate action: Before further flight, repair, in accordance with a method approved by the Manager, Seattle Aircraft Certification Office (ACO), FAA; or in accordance with data meeting the type certification basis of the airplane approved by the Boeing Commercial Airplanes Organization Designation Authorization (ODA) that has been authorized by the Manager, Seattle ACO, to make such findings; or using a method approved in accordance with the procedures specified in paragraph (r) of this AD. For a repair method to be approved, the approval must specifically reference this AD. Doing the repair terminates the inspections required by paragraphs (g) and (h) of this AD.

(j) Retained Optional Preventive Modification

This paragraph restates the optional preventive modification specified in paragraph (d) of AD 2004–09–32, Amendment 39–13622 (69 FR 25481, May 7, 2004); As an alternative to accomplishing the inspections required by paragraphs (g) and (h) of this AD, do the optional preventative modification of the forward upper corner of the L1 entry door cutout, and do all applicable related investigative/corrective actions, by accomplishing all the actions specified in Part 2 of the Work Instructions of Boeing Special Attention Service Bulletin 757–53–0089, dated March 18, 2004. Accomplishment of the modification constitutes terminating action for the inspections required by paragraphs (g) and (h) of this AD.

(k) New Inspections

For airplanes in Group 1, Configurations 1 and 2, and Group 2, Configuration 1 as defined in Boeing Special Attention Service Bulletin 757–53–0094, Revision 1, dated August 12, 2009: Except as provided by paragraph (p)(1) of this AD, at the applicable times specified in paragraph 1.E, ''Compliance,'' of Boeing Special Attention Service Bulletin 757–53–0094, Revision 1, dated August 12, 2009, do HFEC and LFEC inspections for cracking of the skin and bear strap at the forward upper corner of the L1 entry door cutout, in accordance with the Accomplishment Instructions of Boeing Special Attention Service Bulletin 757–53–0094, Revision 1, dated August 12, 2009, except as provided by paragraph (p) of this AD. Repeat the inspections thereafter at intervals not to exceed 1,400 flight cycles. Doing the initial inspection required by this paragraph terminates the inspections required by paragraphs (g) and (h) of this AD. Doing the repair specified in paragraph (l) of this AD, or doing the optional preventive modification specified in paragraph (m) of this AD, terminates the inspections required by this paragraph.

(l) New Terminating Repair

If any cracking is found during any inspection required by paragraph (k) of this AD, before further flight, repair in accordance with the Accomplishment Instructions of Boeing Special Attention Service Bulletin 757–53–0094, Revision 1, dated August 12, 2009, except as required by paragraph (p) of this AD. Doing the repair terminates the repetitive inspections required by paragraph (k) of this AD.

(m) Optional Preventive Modification

Accomplishing the optional preventive modification, in accordance with the Accomplishment Instructions of Boeing Special Attention Service Bulletin 757–53–0094, Revision 1, dated August 12, 2009, except as provided by paragraph (p) of this AD, terminates the repetitive inspections required by paragraph (k) of this AD.

(n) New Inspections and Repair

For airplanes in Group 1, Configurations 3 and 5, and Group 2, Configurations 2 and 4, as identified in Boeing Special Attention Service Bulletin 757–53–0094, Revision 1, dated August 12, 2009, with a repair doubler; a doubler and a tripler; or a doubler, tripler, and quadrupler installed; or with a preventive modification doubler installed: At the applicable times specified in paragraph 1.E, ''Compliance,'' of Boeing Special Attention Service Bulletin 757–53–0094, Revision 1, dated August 12, 2009, except as required by paragraph (p)(2) of this AD, do LFEC, HFEC, and detailed inspections, as applicable, for cracking of the doubler, tripler, quadrupler, skin, bear strap, and inner chord strap, as applicable, in accordance with the Accomplishment Instructions of Boeing Special Attention Service Bulletin 757–53–0094, Revision 1, dated August 12, 2009. Repeat the inspections thereafter at the applicable times specified in paragraph 1.E., ''Compliance,'' of Boeing Special Attention Service Bulletin 757–53–0094, Revision 1, dated August 12, 2009.

(o) New Repair

If any cracking is found during any inspection required by paragraph (n) of this AD, before further flight, repair the crack in accordance with the procedures specified in paragraph (r) of this AD.

(p) New Exceptions to Service Bulletin Specifications

The following exceptions apply to this AD.

(1) Where Boeing Special Attention Service Bulletin 757–53–0094, Revision 1, dated August 12, 2009, specifies a compliance time after the ''original issue date'' or ''Revision 1 date of the service bulletin,'' this AD requires compliance within the specified compliance time after the effective date of this AD.

(2) Where Boeing Special Attention Service Bulletin 757–53–0094, Revision 1, dated August 12, 2009, specifies doing the HFEC, LFEC, and detailed inspections required by paragraph (n) of this AD before the accumulation of 37,500 total flight cycles, this AD requires the inspections to be accomplished at the latest of the times specified in paragraphs (p)(2)(i), (p)(2)(ii), and (p)(2)(iii) of this AD.

(i) Before the accumulation of 37,500 total flight cycles.

(ii) Within 24 months after the effective date of this AD.

(iii) Within 4,000 flight cycles since installation of a repair doubler; a doubler and a tripler; or a doubler, tripler, and quadrupler; or on which a preventive modification doubler is installed; in accordance with the Accomplishment Instructions of Boeing Special Attention Service Bulletin 757–53–0094, Revision 1, dated August 12, 2009, or in accordance with paragraph (h) of this AD.

(3) Where Boeing Special Attention Service Bulletin 757–53–0094, Revision 1, dated August 12, 2009, specifies contacting Boeing for repair instructions, this AD requires repairing in accordance with the procedures specified in paragraph (r) of this AD.

(4) Where Boeing Special Attention Service Bulletin 757–53–0094, Revision 1, dated

August 12, 2009, specifies a specific fastener and material to be used for accomplishing a repair, this AD allows the substitution of fastener and material, as specified in Chapter 51 of the Boeing 757 Structural Repair Manual.

(5) Where Boeing Special Attention Service Bulletin 757–53–0094, Revision 1, dated August 12, 2009, specifies a specific fastener grip length, this AD allows substitution of a fastener grip length, as specified in Chapter 51 of the Boeing 757 Structural Repair Manual.

(6) If it is necessary to remove more parts for access, those parts may be removed. If access is possible without removing identified parts, it is not necessary to remove all of the identified parts.

(q) Credit for Previous Actions

For airplanes in Group 1, Configurations 1 and 2; and Group 2, Configuration 1; as defined in Boeing Special Attention 757–53–0094, Revision 1, dated August 12, 2009: This paragraph provides credit for the actions required by paragraph (k) of this AD, if those actions were performed before the effective date of this AD using Boeing Special Attention Service Bulletin 757–53–0094, dated January 16, 2008, or using Special Attention Service Bulletin 757–53–0089, dated March 18, 2004.

(r) Alternative Methods of Compliance (AMOCs)

(1) The Manager, Seattle ACO, FAA, has the authority to approve AMOCs for this AD, if requested using the procedures found in 14 CFR 39.19. In accordance with 14 CFR 39.19, send your request to your principal inspector or local Flight Standards District Office, as appropriate. If sending information directly to the ACO, send it to ATTN: Nancy Marsh, Aerospace Engineer, Airframe Branch, ANM–120S, FAA, 1601 Lind Avenue SW., Renton, Washington 98057–3356; phone: 425–917–6440; fax: 425–917–6432; email: *nancy.marsh@faa.gov*.

(2) Before using any approved AMOC, notify your appropriate principal inspector, or lacking a principal inspector, the manager of the local flight standards district office/certificate holding district office.

(3) An AMOC that provides an acceptable level of safety may be used for any repair required by this AD if it is approved by the Boeing Commercial Airplanes ODA that has been authorized by the Manager, Seattle ACO to make those findings. For a repair method to be approved, the repair must meet the certification basis of the airplane, and the approval must specifically refer to this AD.

(4) AMOCs previously approved in accordance with AD 2004–09–32, Amendment 39–13622 (69 FR 25481, May 7, 2004), are approved as AMOCs for the corresponding actions specified in paragraphs (g), (h), and (i) of this AD.

(s) Related Information

For more information about this AD, contact Nancy Marsh, Aerospace Engineer, Airframe Branch, ANM–120S, FAA, 1601 Lind Avenue SW., Renton, Washington 98057–3356; phone: 425–917–6440; fax: 425–917–6432; email: *nancy.marsh@faa.gov.*

(t) Material Incorporated by Reference

(1) The Director of the Federal Register approved the incorporation by reference (IBR) of the service information listed in this paragraph under 5 U.S.C. 552(a) and 1 CFR part 51.

(2) You must use this service information as applicable to do the actions required by this AD, unless the AD specifies otherwise.

(3) The following service information was approved for IBR on October 3, 2012.

(i) Boeing Special Attention Service Bulletin 757–53–0094, Revision 1, dated August 12, 2009.

(ii) Reserved.

(4) The following service information was approved for IBR on May 24, 2004 (69 FR 25481, May 7, 2004).

(i) Boeing Special Attention Service Bulletin 757–53–0089, dated March 18, 2004.

(ii) Reserved.

(5) For service information identified in this AD, contact Boeing Commercial Airplanes, Attention: Data & Services Management, P.O. Box 3707, MC 2H–65, Seattle, Washington 98124–2207; telephone 206–544–5000, extension 1; fax 206–766–5680; Internet *https://www.myboeingfleet.com.*

(6) You may review copies of the service information at the FAA, Transport Airplane Directorate, 1601 Lind Avenue SW., Renton, Washington. For information on the availability of this material at the FAA, call 425–227–1221.

(7) You may also review copies of the service information that is incorporated by reference at the National Archives and Records Administration (NARA). For information on the availability of this material at NARA, call 202–741–6030, or go to: *http://www.archives.gov/federal-register/cfr/ibr_locations.html.*

Issued in Renton, Washington, on July 23, 2012.

Kalene C. Yanamura,

Acting Manager, Transport Airplane Directorate, Aircraft Certification Service.

[FR Doc. 2012–20763 Filed 8–28–12; 8:45 am]

BILLING CODE 4910–13–P

DEPARTMENT OF TRANSPORTATION

Federal Aviation Administration

14 CFR Part 71

[Docket No. FAA–2012–0519; Airspace Docket No. 12–ANM–16]

Amendment of Class D and Class E Airspace; Bozeman, MT

AGENCY: Federal Aviation Administration (FAA), DOT.

ACTION: Final rule.

SUMMARY: This action modifies Class D and Class E airspace at Bozeman Yellowstone International Airport, Bozeman, MT. This action aligns two Class E airspace areas with the Class D airspace area. This action also updates the airport name to Bozeman Yellowstone International Airport. This improves the safety and management of Instrument Flight Rules (IFR) operations at the airport.

DATES: Effective date, 0901 UTC, November15, 2012. The Director of the Federal Register approves this incorporation by reference action under 1 CFR Part 51, subject to the annual revision of FAA Order 7400.9 and publication of conforming amendments.

FOR FURTHER INFORMATION CONTACT: Eldon Taylor, Federal Aviation Administration, Operations Support Group, Western Service Center, 1601 Lind Avenue SW., Renton, WA 98057; telephone (425) 203–4537.

SUPPLEMENTARY INFORMATION:

History

On June 27, 2012, the FAA published in the **Federal Register** a Notice of Proposed Rulemaking (NPRM) to modify Class D and E airspace at Bozeman, MT (77 FR 38227). Interested parties were invited to participate in this rulemaking effort by submitting written comments on the proposal to the FAA. No comments were received.

Class D and E airspace designations are published in paragraphs 5000, 6002, 6004, 6005 and 6006, respectively, of FAA Order 7400.9V dated August 9, 2011, and effective September 15, 2011, which is incorporated by reference in 14 CFR part 71.1. The Class D and Class E airspace designations listed in this document will be published subsequently in that Order.

The Rule

This action amends Title 14 Code of Federal Regulations (14 CFR) part 71 by modifying Class E surface airspace and Class E airspace designated as an extension to Class D, at Bozeman Yellowstone International Airport, Bozeman, MT, adjusting the radii to be in alignment with the Class D airspace area. This action also updates the airport name from Bozeman, Gallatin Field Airport, to Bozeman Yellowstone International Airport for existing Class D and E airspace areas. This action is necessary for the safety and management of IFR operations.

The FAA has determined this regulation only involves an established body of technical regulations for which frequent and routine amendments are necessary to keep them operationally current. Therefore, this regulation: (1) Is not a ''significant regulatory action'' under Executive Order 12866; (2) is not a ''significant rule'' under DOT Regulatory Policies and Procedures (44 FR 11034; February 26, 1979); and (3)

does not warrant preparation of a regulatory evaluation as the anticipated impact is so minimal. Since this is a routine matter that will only affect air traffic procedures and air navigation, it is certified this rule, when promulgated, will not have a significant economic impact on a substantial number of small entities under the criteria of the Regulatory Flexibility Act. The FAA's authority to issue rules regarding aviation safety is found in Title 49 of the U.S. Code. Subtitle 1, Section 106 discusses the authority of the FAA Administrator. Subtitle VII, Aviation Programs, describes in more detail the scope of the agency's authority. This rulemaking is promulgated under the authority described in Subtitle VII, Part A, Subpart I, Section 40103. Under that section, the FAA is charged with prescribing regulations to assign the use of airspace necessary to ensure the safety of aircraft and the efficient use of airspace. This regulation is within the scope of that authority as it amends controlled airspace at Bozeman Yellowstone International Airport, Bozeman, MT.

Environmental Review

The FAA has determined that this action qualifies for categorical exclusion under the National Environmental Policy Act in accordance with FAA Order 1050.1E, ''Environmental Impacts: Policies and Procedures,'' paragraph 311a. This airspace action is not expected to cause any potentially significant environmental impacts, and no extraordinary circumstances exist that warrant preparation of an environmental assessment.

List of Subjects in 14 CFR Part 71

Airspace, Incorporation by reference, Navigation (air)

Adoption of the Amendment

In consideration of the foregoing, the Federal Aviation Administration amends 14 CFR part 71 as follows:

PART 71—DESIGNATION OF CLASS A, B, C, D AND E AIRSPACE AREAS; AIR TRAFFIC SERVICE ROUTES; AND REPORTING POINTS

■ 1. The authority citation for 14 CFR Part 71 continues to read as follows:

Authority: 49 U.S.C. 106(g), 40103, 40113, 40120; E.O. 10854, 24 FR 9565, 3 CFR, 1959–1963 Comp., p. 389.

§ 71.1 [Amended]

■ 2. The incorporation by reference in 14 CFR Part 71.1 of the Federal Aviation Administration Order 7400.9V, Airspace Designations and Reporting Points, dated August 9, 2011, and effective September 15, 2011 is amended as follows:

Paragraph 5000 Class D airspace.

* * * * *

ANM MT D Bozeman, MT [Modified]

Bozeman Yellowstone International Airport, MT
(Lat. 45°46′39″ N., long. 111°09′07″ W.)

That airspace extending upward from the surface to and including 7,000 feet MSL within a 5.4-mile radius of Bozeman Yellowstone International Airport. This Class D airspace area is effective during the specific dates and times established in advance by a Notice to Airmen. The effective date and time will thereafter be continuously published in the Airport/Facility Directory.

Paragraph 6002 Class E airspace designated as surface areas.

* * * * *

ANM MT E2 Bozeman, MT [Modified]

Bozeman Yellowstone International Airport, MT
(Lat. 45°46′39″ N., long. 111°09′07″ W.)

Within a 5.4-mile radius of Bozeman Yellowstone International Airport. This Class E airspace area is effective during the specific dates and times established in advance by a Notice to Airmen. The effective date and time will thereafter be continuously published in the Airport/Facility Directory.

Paragraph 6004 Class E airspace designated as an extension to a Class D surface area.

* * * * *

ANM MT E4 Bozeman, MT [Modified]

Bozeman Yellowstone International Airport, MT
(Lat. 45°46′39″ N., Long. 111°09′07″ W.)

That airspace extending upward from the surface within 3 miles each side of the 316° bearing of Bozeman Yellowstone International Airport extending from the 5.4-mile radius of the airport to 15.5 miles northwest of the airport, and that airspace 2.4 miles each side of the 212° bearing of the Bozeman Yellowstone International Airport extending from the 5.4-mile radius of the airport to 7 miles southwest of the airport.

Paragraph 6005 Class E airspace areas extending upward from 700 feet or more above the surface of the earth.

* * * * *

ANM MT E5 Bozeman, MT [Modified]

Bozeman Yellowstone International Airport, MT
(Lat. 45°46′39″ N., long. 111°09′07″ W.)

That airspace extending upward from 700 feet above the surface within a 13.5-mile radius of Bozeman Yellowstone International Airport, and within 8 miles northeast and 13 miles southwest of the 316° bearing of the airport extending from the 13.5-mile radius to 24.4 miles northwest of the airport.

Paragraph 6006 En route domestic airspace areas.

* * * * *

ANM MT E6 Bozeman, MT [Modified]

Bozeman Yellowstone International Airport, MT
(Lat. 45°46′39″ N., Long. 111°09′07″ W.)

That airspace extending upward from 1,200 feet above the surface within a 50-mile radius of the Bozeman Yellowstone International Airport; excluding existing lateral limits of controlled airspace 12,000 feet MSL and above.

Issued in Seattle, Washington, on August 21, 2012.

Vered Lovett,

Acting Manager, Operations Support Group, Western Service Center.

[FR Doc. 2012–21161 Filed 8–28–12; 8:45 am]

BILLING CODE 4910–13–P

DEPARTMENT OF TRANSPORTATION

Federal Aviation Administration

14 CFR Part 71

[Docket No. FAA–2012–0411; Airspace Docket No. 12–ASO–26]

Amendment of Class E Airspace; Montgomery, AL, Correction

AGENCY: Federal Aviation Administration (FAA), DOT.

ACTION: Final rule, technical amendment, correction.

SUMMARY: This action corrects geographic coordinates that were not adjusted in the airspace description of a final rule, technical amendment published in the **Federal Register** on July 31, 2012, amending controlled airspace in the Montgomery, AL, area. The corrected coordinates for Maxwell AFB and Wetumpka Municipal Airport, are included in this final.

DATES: Effective date 0901 UTC, September 20, 2012. The Director of the Federal Register approves this incorporation by reference action under Title 1, Code of Federal Regulations, part 51, subject to the annual revision of FAA Order 7400.9 and publication of conforming amendments.

FOR FURTHER INFORMATION CONTACT: John Fornito, Operations Support Group, Eastern Service Center, Federal Aviation Administration, P.O. Box 20636, Atlanta, Georgia 30320; telephone (404) 305–6364.

SUPPLEMENTARY INFORMATION:

History

On July 31, 2012, the FAA published a final rule, technical amendment, in the **Federal Register** amending the Class E airspace area for Montgomery, AL, by recognizing the name change to Prattville-Grouby Field Airport (formerly Autauga Airport) (77 FR

45238). After publication, the FAA found that the geographic coordinates of Maxwell AFB and Wetumpka Municipal Airport need to be adjusted to be in concert with the FAAs aeronautical database. This action makes the administrative adjustment that does not affect the altitude, boundaries, or operating requirements of the airspace. Therefore, notice and public procedures under 5 U.S.C. 553(b) are unnecessary.

The Class E airspace designations are published in Paragraphs 6005 of FAA order 7400.9V, dated August 9, 2011, and effective September 15, 2011, which is incorporated by reference in 14 CFR 71.1. The Class E airspace designations listed in this document will be published subsequently in the Order.

Correction to Final Rule

Accordingly, pursuant to the authority delegated to me, the geographic coordinates for Maxwell AFB and Wetumpka Municipal Airport, as listed in the airspace designation of the Class E airspace, Montgomery, AL, as published in the **Federal Register** of July 31, 2012, (77 FR 45238), FR Doc. 2012–18522, are corrected as follows:

§ 71.1 [Corrected]

* * * * *

ASO AL E5 Montgomery, AL [Corrected]

On page 45238, column 3, line 51, under Maxwell AFB, remove, lat. 32°22′45″N., long. 86°21′45″W, and insert lat. 32°22′59″N., long. 86°21′57″W, and on page 45238, column 3, line 55, under Wetumpka Municipal Airport, remove lat. 32°31′46″N., long. 86°19′42″W, and insert lat. 32°31′38″N., long. 86°19′52″W.

Issued in College Park, Georgia, on August 16, 2012.

Barry A. Knight,

Manager, Operations Support Group, Eastern Service Center, Air Traffic Organization.

[FR Doc. 2012–21162 Filed 8–28–12; 8:45 am]

BILLING CODE 4910–13–P

DEPARTMENT OF TRANSPORTATION

Federal Aviation Administration

14 CFR Part 71

[Docket No. FAA–2012–0538; Airspace Docket No. 12–ANM–8]

Amendment of Class E Airspace; Lewistown, MT

AGENCY: Federal Aviation Administration (FAA), DOT.

ACTION: Final rule.

SUMMARY: This action modifies Class E airspace at Lewistown Municipal Airport, Lewistown, MT. Controlled airspace is necessary to accommodate aircraft using Area Navigation (RNAV) Global Positioning System (GPS) standard instrument approach procedures at Lewistown Municipal Airport. This improves the safety and management of Instrument Flight Rules (IFR) operations at the airport.

DATES: Effective date, 0901 UTC, November 15, 2012. The Director of the Federal Register approves this incorporation by reference action under 1 CFR Part 51, subject to the annual revision of FAA Order 7400.9 and publication of conforming amendments.

FOR FURTHER INFORMATION CONTACT: Eldon Taylor, Federal Aviation Administration, Operations Support Group, Western Service Center, 1601 Lind Avenue SW., Renton, WA 98057; telephone (425) 203–4537.

SUPPLEMENTARY INFORMATION:

History

On June 27, 2012, the FAA published in the **Federal Register** a Notice of Proposed Rulemaking (NPRM) to modify controlled airspace at Lewistown, MT (77 FR 38226). Interested parties were invited to participate in this rulemaking effort by submitting written comments on the proposal to the FAA. No comments were received.

Class E airspace designations are published in paragraph 6002 and 6005, respectively, of FAA Order 7400.9V dated August 9, 2011, and effective September 15, 2011, which is incorporated by reference in 14 CFR part 71.1. The Class E airspace designations listed in this document will be published subsequently in that Order.

The Rule

This action amends Title 14 Code of Federal Regulations (14 CFR) part 71 by modifying Class E surface airspace, and Class E airspace extending upward from 700 feet above the surface, at Lewistown Municipal Airport, Lewistown, MT, to accommodate IFR aircraft executing RNAV (GPS) standard instrument approach procedures at the airport. This action is necessary for the safety and management of IFR operations.

The FAA has determined this regulation only involves an established body of technical regulations for which frequent and routine amendments are necessary to keep them operationally current. Therefore, this regulation: (1) Is not a ''significant regulatory action'' under Executive Order 12866; (2) is not a ''significant rule'' under DOT Regulatory Policies and Procedures (44 FR 11034; February 26, 1979); and (3) does not warrant preparation of a regulatory evaluation as the anticipated impact is so minimal. Since this is a routine matter that will only affect air traffic procedures and air navigation, it is certified this rule, when promulgated, will not have a significant economic impact on a substantial number of small entities under the criteria of the Regulatory Flexibility Act. The FAA's authority to issue rules regarding aviation safety is found in Title 49 of the U.S. Code. Subtitle 1, Section 106 discusses the authority of the FAA Administrator. Subtitle VII, Aviation Programs, describes in more detail the scope of the agency's authority. This rulemaking is promulgated under the authority described in Subtitle VII, Part A, Subpart I, Section 40103. Under that section, the FAA is charged with prescribing regulations to assign the use of airspace necessary to ensure the safety of aircraft and the efficient use of airspace. This regulation is within the scope of that authority as it modifies controlled airspace at Lewistown Municipal Airport, Lewistown, MT.

Environmental Review

The FAA has determined that this action qualifies for categorical exclusion under the National Environmental Policy Act in accordance with FAA Order 1050.1E, ''Environmental Impacts: Policies and Procedures,'' paragraph 311a. This airspace action is not expected to cause any potentially significant environmental impacts, and no extraordinary circumstances exist that warrant preparation of an environmental assessment.

List of Subjects in 14 CFR Part 71

Airspace, Incorporation by reference, Navigation (air)

Adoption of the Amendment

In consideration of the foregoing, the Federal Aviation Administration amends 14 CFR part 71 as follows:

PART 71—DESIGNATION OF CLASS A, B, C, D AND E AIRSPACE AREAS; AIR TRAFFIC SERVICE ROUTES; AND REPORTING POINTS

■ 1. The authority citation for 14 CFR part 71 continues to read as follows:

Authority: 49 U.S.C. 106(g), 40103, 40113, 40120; E.O. 10854, 24 FR 9565, 3 CFR, 1959–1963 Comp., p. 389.

§ 71.1 [Amended]

■ 2. The incorporation by reference in 14 CFR Part 71.1 of the Federal Aviation Administration Order 7400.9V, Airspace Designations and Reporting Points, dated August 9, 2011, and effective

September 15, 2011 is amended as follows:

Paragraph 6002 Class E airspace designated as surface areas.

* * * * *

ANM MT E2 Lewistown, MT [Modified]

Lewistown Municipal Airport, MT
(Lat. 47°02′57″N., long. 109°28′00″W.)

Within a 6.8-mile radius of the Lewistown Municipal Airport. This Class E airspace area is effective during the specific dates and times established in advance by a Notice to Airmen. The effective date and time will thereafter be continuously published in the Airport/Facility Directory.

Paragraph 6005 Class E airspace areas extending upward from 700 feet or more above the surface of the earth.

* * * * *

ANM MT E5 Lewistown, MT [Modified]

Lewistown Municipal Airport, MT
(Lat. 47°02′57″N., long. 109°28′00″W.)

That airspace extending upward from 700 feet above the surface within 9.3-mile radius of the Lewistown Municipal Airport, and within 4.5 miles each side of the Lewistown Municipal Airport 269° bearing extending from the 9.3-mile radius to 14.5 miles west of the airport, and within 2.5 miles south and 4 miles north of the Lewistown Municipal Airport 258° bearing extending from the 9.3-mile radius to 20.5 miles west of the airport; that airspace extending upward from 1,200 feet above the surface bounded by a line beginning at lat. 47°21′00″N., long. 110°33′00″W.; to lat. 47°30′00″N., long. 110°00′00″W.; to lat. 47°16′00″N., long. 109°44′00″W.; to lat. 47°11′33″N., long. 108°46′00″W.; to lat. 46°43′40″N., long. 108°48′22″W.; to lat. 46°43′40″N., long. 109°32′14″W., to lat. 46°32′19″N., long. 109°32′14″W.; to lat. 46°32′19″N., long. 110°06′30″W.; thence to the point of origin.

Issued in Seattle, Washington, on August 17, 2012.

John Warner,

Manager, Operations Support Group, Western Service Center.

[FR Doc. 2012–21164 Filed 8–28–12; 8:45 am]

BILLING CODE 4910–13–P

CONSUMER PRODUCT SAFETY COMMISSION

16 CFR Part 1221

[CPSC Docket No. CPSC–2011–0064]

RIN 3041–AC92

Safety Standard for Play Yards

AGENCY: Consumer Product Safety Commission.

ACTION: Final rule.

SUMMARY: Section 104(b) of the Consumer Product Safety Improvement Act of 2008 (CPSIA), also known as the ''Danny Keysar Child Product Safety Notification Act,'' requires the United States Consumer Product Safety Commission (Commission, CPSC, us, or we) to promulgate consumer product safety standards for durable infant or toddler products. These standards are to be ''substantially the same as'' applicable voluntary standards or more stringent than the voluntary standard if the Commission concludes that more stringent requirements would further reduce the risk of injury associated with the product. In this rule, we are issuing a safety standard for play yards in response to the CPSIA.[1]

DATES: This rule is effective on February 28, 2013 and will apply to all play yards manufactured or imported on or after that date. The incorporation by reference of the publication listed in this rule is approved by the Director of the Federal Register as of February 28, 2013.

FOR FURTHER INFORMATION CONTACT: Justin Jirgl, Compliance Officer, Office of Compliance and Field Investigations, U.S. Consumer Product Safety Commission, 4330 East-West Highway, Bethesda, MD 20814; email: *jjirgl@cpsc.gov.*

SUPPLEMENTARY INFORMATION:

A. Background: Section 104(b) of the Consumer Product Safety Improvement Act

The Consumer Product Safety Improvement Act of 2008 (CPSIA, Pub. L. 110–314) was enacted on August 14, 2008. Section 104(b) of the CPSIA requires the Commission to promulgate consumer product safety standards for durable infant and toddler products. These standards are to be ''substantially the same as'' applicable voluntary standards or more stringent than the voluntary standard if the Commission concludes that more stringent requirements would further reduce the risk of injury associated with the product. The term ''durable infant or toddler product'' is defined in section 104(f)(1) of the CPSIA as a durable product intended for use, or that may be reasonably expected to be used, by children under the age of 5 years. Play yards are one of the products specifically identified in section 104(f)(2)(F) as a durable infant or toddler product.

In the **Federal Register** of September 20, 2011 (76 FR 58167), we published a notice of proposed rulemaking (NPR) for play yards, incorporating by reference ASTM F406–11, ''Standard Consumer Safety Specification for Non-Full-Size Baby Cribs/Play Yards,'' with three clarifications. ASTM F406 is the safety standard for both non-full-size cribs and play yards. In the proposed rule for play yards, we indicated which sections of the ASTM standard apply to play yards, and we excluded the provisions of ASTM F406 that apply to non-full-size cribs.

The ASTM subcommittee on play yards developed a newer edition of this standard, ASTM F406–12a, which includes the three clarifications we proposed in the NPR. ASTM F406–12a also contains two clarifications that were suggested in comments we received from the public in response to the NPR. Those two clarifications: (1) Added a preload to the mattress vertical displacement test; and (2) exempted from the top rail configuration requirement play yards with upward-folding top rails.

In this document, we are issuing a safety standard for play yards, which incorporates by reference ASTM F406–12a and provides a 6-month (from the date of publication) effective date for the mandatory play yard standard.

B. The Product

ASTM F406–12a defines a ''play yard'' as a ''framed enclosure that includes a floor and has mesh or fabric sided panels primarily intended to provide a play or sleeping environment for children. It may fold for storage or travel.'' Play yards are intended for children who are less than 35 inches tall, who cannot climb out of the product. Some play yards include accessory items that attach to the product, including mobiles, toy bars, canopies, bassinets, and changing tables.

C. Incident Data

The preamble to the NPR (76 FR 58168) summarized the data for incidents related to play yards reported to us from early November 2007 through early April 2011. The final rule is based on the data provided in the NPR, as well as updated data on incidents related to play yards reported to us from April 2011 through December 31, 2011.

From April 10, 2011, through December 31, 2011, we received information on 41 play yard-related incidents. Fifteen of the 41 incidents were fatal. Of the remaining 26 incidents, eight resulted in injuries to the child.

[1] The Commission voted 4–0 to approve publication of this rule. Chairman Inez M. Tenenbaum filed a statement concerning this action which may be viewed on the Commission's Web site at *http://www.cpsc.gov/library/foia/ballot/ballot12/playyards.pdf* or obtained from the Commission's Office of the Secretary.

Eleven of the 15 fatal incidents are attributable to an unsafe sleep environment, such as the presence of soft bedding. For one fatality, very little information was supplied to us and, we were unable to determine the cause of the death. Three of the 15 fatalities were play yard related. One child died when the bassinet accessory being used as a sleep environment was assembled without key structural elements, which resulted in a dangerous tilt of the sleep surface. The child slid into the corner of the bassinet and suffocated. In another incident, a child was attempting to climb out of a play yard and, while holding onto a separate bassinet nearby, the canopy of the bassinet fell forward and caught him on the back of the neck, suffocating him. A third child suffocated when he got his head stuck in a torn opening between the floor and the mesh side of the play yard.

The recent incidents have hazard patterns similar to those reported in the NPR, and include:

- Eleven incidents, all resulting in fatalities, were the result of unsafe sleep environments and unsafe sleep practices.
- Ten incidents were caused by broken or detached component parts, such as loose wheels and loose hardware, which resulted in the instability or collapse of the product. There were three injuries reported in this category.
- Five incidents were related to the mesh or fabric sides of the play yard, such as stitching that unraveled, tears in the fabric, and mesh holes that were too large. There were two injuries and one fatality reported in this category.
- Four incidents were caused by hazardous accessories, such as broken or detached components from a mobile or a tent accessory. There was one injury reported in this category.
- Three incidents were related to the mattress pad or floor of the play yard, including reports that the fasteners designed to keep the floor board in place failed. There were no injuries reported in this category.
- Three incidents were due to the side rail of the play yard collapsing. There were no injuries in this category.
- Two incidents were the result of the child being able to climb out of the play yard. There was one injury and one fatality reported in this category.
- One incident, which resulted in a fatality, can be attributed to assembly issues in the bassinet accessory of a play yard. In this incident, the bassinet was missing key structural elements meant to support the accessory. The sleep surface of the bassinet tilted, and the child slid into the corner and suffocated.
- One incident was the result of a child nearly choking on a sticker that was a component of the play yard.
- For one reported fatality associated with a play yard, there was insufficient information to determine the cause.

D. Response to Comments on the Proposed Rule

The preamble to the NPR invited comments concerning all aspects of the proposed rule. We received comments from 23 individuals or organizations. Many of the comments contained more than one issue. Thus, we organized our responses by issue, rather than responding to each individual commenter. Each comment and response is numbered below to help distinguish between different comments. The number assigned to each comment is purely for organizational purposes and does not signify the comment's value or importance, or the order in which it was received. All of the comments can be viewed on: *www.regulations.gov*, by searching under the docket number for this rulemaking, CPSC–2011–0064.

1. Generally Unsupportive of Regulations

(Comment 1)—One commenter does not support government regulation of this, or any, consumer product and asserts that the free market will ''weed out those manufacturers of unsafe products.''

(Response 1)—The CPSIA requires that we promulgate mandatory regulations for durable infant or toddler products, including play yards. This final rule fulfills a statutory obligation given to us by Congress. Accordingly, issuance of a play yard mandatory standard is consistent with the statutory requirements of the CPSIA.

2. The Definition of ''Play Yard''

(Comment 2)—One commenter notes a possible loophole in the ASTM F406 definition of ''play yard'' because materials other than mesh or fabric could be used to form the walls. According to the commenter, this would allow a manufacturer to circumvent the mandatory play yard rule.

(Response 2)—Play yards with sides made of materials that are not flexible would be considered rigid-sided products. These products would be classified as full-size- or non-full-size cribs, subject to more severe requirements under 16 CFR part 1219 (full-size cribs) or 16 CFR part 1220 (non-full-size cribs). It would be less burdensome to produce a mesh- or fabric-sided product. Accordingly, we do not believe that a play yard manufacturer would attempt to evade the play yard standard requirements by making a rigid-sided product.

3. ASTM Voluntary Standard as the Basis for the Mandatory Standard

(Comment 3)—Three commenters note that the ASTM standard might not be the best basis for the mandatory play yard rule. Each commenter asserts that because we do not have data to indicate whether the fatalities and injuries were caused by play yards not in compliance with the current ASTM standard, we cannot be sure that incorporating by reference the ASTM standard will result in safer play yards.

(Response 3)—The CPSIA requires that we base our mandatory standard for play yards on a voluntary standard. We chose the ASTM standard because it is the most widely used play yard standard in the United States. The ASTM committees that produce the durable infant and toddler product standards represent a cross-section of stakeholders, including manufacturers, retailers, testing laboratories, independent consultants, representatives from consumer advocacy groups, representatives from Health Canada, as well as CPSC staff. The creation of an ASTM standard involves analyzing CPSC incident data in detail, assessing other standards (including international standards), and testing products. The ASTM standard upon which we are basing the mandatory regulation addresses the known hazards of play yards and it is the most stringent standard available. Therefore, we believe that it is an appropriate standard upon which to base the play yard mandatory rule.

4. Injury Rates

(Comment 4)—One commenter indicates that ''the extremely low incidence of injury puts into question the need for regulation at all, outside of the CPSIA mandate, as there probably is no heinous market failure.''

(Response 4)—The standard is based on careful analysis of incidents, injuries, and fatalities associated with play yards. Injury rates, when available, are an important part of that analysis. In this case, however, even if we agreed with the commenter that the injury rate is too low, that does not negate the requirement for the issuance of a play yard mandatory standard, which fulfills a statutory obligation given to us by Congress. However, we disagree with the commenter and believe that the incidents, injuries, and fatalities justify

the issuance of a play yard mandatory standard.

5. American Baby Group Data

(Comment 5)—One commenter says that the ''record demonstrates that the Commission relies solely upon information provided by a 2005 survey by American Baby Group for all market data,'' and that ''affected parties may challenge the rule by claiming that the Commission's actions are based on old, inaccurate data.''

(Response 5)—The commenter is incorrect in assuming that the 2005 American Baby Group survey (*2006 Baby Products Tracking Study*) was the sole source of market information we considered in the rulemaking process. The *Baby Products Tracking Study* was used to provide an estimate of the magnitude of the play yard market. The initial regulatory flexibility analysis recognized the limitations of this data, both for its age and potentially biased sampling methods.

However, we also used market research—conducted independently—to perform the regulatory flexibility analysis. This research provided information on the number of firms supplying play yards to the U.S. market, their type, their size, and their location. We also researched, independently, the number of products supplied by each firm, each firm's compliance with the voluntary standard, as well as details about accessories sold with each play yard. It is this information, along with input from our staff and play yard manufacturers, which led to the conclusions of the initial regulatory flexibility analysis.

6. Small Business Impact

(Comment 6)—One commenter expresses concerns about how effectively the CPSC complied with the requirements of the Regulatory Flexibility Act (RFA). The commenter asserts that the proposed rule will have a significant impact on all small firms.

(Response 6)—The economic impact of the mandatory play yard standard proposed in the NPR would not be significant for play yard suppliers who already are in compliance with the ASTM play yard standard. Many play yard manufacturers and importers have a history of making adjustments to their play yards to remain in compliance with the ASTM standard, and they likely would continue to comply in the absence of a mandatory standard. Firms with a history of voluntary compliance would have few, if any, costs associated with the proposed rule, regardless of their size.

The initial regulatory flexibility analysis recognized that the impact on firms that supply noncompliant play yards to the U.S. market potentially could be significant. However, because the CPSIA requires that we promulgate a mandatory standard that is substantially the same as, or more stringent than, the voluntary standard, the CPSC is limited in how it can minimize the economic impact on small firms that are not in compliance with the standard.

7. International Standards

(Comment 7)—We received two comments regarding international play yard standards. One commenter expresses the concern that our play yard mandatory standard could impact trade agreements and emphasizes the importance of standards harmonization as a way to avoid this. Another commenter states that international harmonization should be a priority.

(Response 7)—When drafting the NPR for play yards, we reviewed, compared, and considered a variety of play yard standards, including the Canadian standard, the European standard, and the Australian/New Zealand standard. There are differences among all of the international standards. Thus, even if we adopt part, or all, of one of the standards listed here, we still would not have complete international harmonization. We are aware of the utility of having harmonized standards in a global marketplace, and we will continue to strive to achieve this harmonization, whenever possible.

8. Adequacy of Testing

(Comment 8)—One commenter states that the proposed test methods for play yards, which do not include any cyclic tests (tests that involve hundreds or thousands of testing cycles in order to evaluate a product's durability), are insufficient because play yards are set up and taken down more often than cribs.

(Response 8)—Cyclic testing is time-consuming and expensive. For play yards, we have found that using very heavy loads applied for one testing cycle (instead of cyclic testing that would require relatively lighter loads and testing cycles that are repeated hundreds or thousands of times) can simulate a lifetime of use. The tests found in the play yard standard were developed over time, and they have been found to be reliable indicators of when a play yard could present a hazard.

9. Quality Control

(Comment 9)—One commenter states that the CPSC should establish a mandatory set of production and manufacturing inspection standards for the industry.

(Response 9)—The CPSC's role is to monitor the results of the manufacturing process, not participate in the process itself. We monitor the manufacturing process in several ways. First, we are able to act preventatively by issuing mandatory standards and requiring children's products be third party tested by an accredited laboratory. Second, we have the ability to act if the manufacturing process fails and a product is sold that does not meet a mandatory standard or is defective and presents a substantial risk of injury to the public.

10. Effective Date

(Comment 10)—Several commenters weigh in on the appropriate effective date for the proposed rule. One commenter, representing numerous juvenile product manufacturers, supports the proposed 6-month effective date. One manufacturer says: ''from an industrial point of view, 6 months of fulfilling a new legislation is very short'' and, therefore, suggests a 12-month effective date. Two other commenters also feel that the effective date should be longer. One suggests that it is ''doubtful that a six month grace period would provide sufficient protection for the small businesses that the RFA intends to protect,'' while the other says that an effective date ''6 months after publication of the final rule'' is ''seemingly arbitrary'' and that other alternatives ''may encourage more compliance.''

One commenter, representing several consumer advocacy groups, recommends: ''an effective date of 90 days after publication in the **Federal Register**.'' Their rationale is twofold. First, ''the changes to the voluntary standard proposed by CPSC are minor,'' the commenter opines. Second, the commenter adds: ''it affects only product manufactured after that date, not sold by that date,'' and ''manufacturers and retailers have large inventories of children's products and will be able to sell noncompliant product for years after the effective date. The sooner new products meet the standard, the better for the infants and toddlers who will be using them.''

(Response 10)—We consider 6 months sufficient time for suppliers to come into compliance with the proposed rule. Although a longer effective date would allow small entities to spread their costs

out over a longer period of time, 6 months is common in the industry. For example, 6 months is the amount of time the Juvenile Products Manufacturers Association allows for products in their certification program to shift to a new standard. On the other hand, a shorter effective date could put a substantial burden on firms, particularly those whose play yards currently do not meet the requirements of the voluntary ASTM standard.

We share concerns about noncompliant products being available for years beyond the effective date. However, the number and severity of play yard incidents does not seem to warrant a shorter effective date than that used for other durable infant products, particularly given that ongoing compliance activities would continue to be used to pull unsafe play yards from the market.

11. Bassinet and Cradle Accessory Misassembly

(Comment 11)—One commenter states that incidents arise from products that appear to be set up correctly but are actually misassembled. The commenter recommends that we add language to the mandatory play yard standard to address this hazard, by requiring products with consumer-assembled components be designed to prevent misassembly. If that is not possible, the commenter suggests that clear visual indicators be included to alert consumers that the accessory has not been assembled correctly.

(Response 11)—Many play yards are sold with accessories that attach to the product, such as bassinets, changing tables, and mobiles. Bassinet accessories are unique among play yard accessories because bassinet accessories are intended to be used as a sleeping environment, and infants are meant to be left unsupervised in them for extended periods of time. Serious injuries or fatalities can result if a play yard bassinet accessory has been assembled without key structural elements, such as rods, tubes, bars, and hooks, which keep the sleep surface flat and level. A tilt in the sleeping surface of the bassinet can result in an infant getting into a position where he or she is unable to breathe and is at risk of suffocation.

It is possible that the omission of key structural elements initially may not be visually evident to the consumer. If the misassembled accessory supports an infant without a catastrophic and obvious change to the sleep surface, then a consumer may continue to use the accessory and place a child in danger inadvertently.

We considered adding a provision to the play yard final rule to address the hazards associated with play yard bassinet accessories that can be assembled while missing key structural elements. However, we have chosen, instead, to publish an NPR in today's issue of the **Federal Register**, in which we propose a requirement and a test method to address bassinet accessory misassembly in play yards.

12. Play Yards With Upward Folding Side Rails

(Comment 12)—One commenter, a play yard manufacturer, states that play yards with side rails that fold upward should be excluded from the top rail configuration requirement. The commenter notes that most play yards form a dangerous V-shape if the side rail latch mechanisms are not locked properly. The commenter states that his firm's play yards are designed differently than the ''typical'' play yard, in that the top rail folds upward, which forms a non-dangerous upside down V-shape. If a child were to put their weight on the top rail by leaning on it, their weight would actually lock the top side rail further, rather than unlock it. The commenter requests that the play yard standard exempt play yards that fold upward from the top rail configuration requirement because they will not expose a child to a dangerous V-shape.

(Response 12)—We agree with the commenter. The top rail configuration requirements, found in section 7.10 of ASTM F406–12a, are intended to address entrapment hazards associated with side rails folding and creating a V-shape. If a child's neck is caught in the V-shape, the child could suffocate. The exemption for play yards with upward folding side rails has already been added to ASTM F406–12a. By incorporating by reference ASTM F406–12a, we support the inclusion of this clarification in the play yard mandatory standard.

13. Unsafe Sleep Environment

(Comment 13)—Five commenters raise concerns about the addition of soft bedding, such as blankets, pillows, and quilted covers, which can create an unsafe sleep environment for an infant. Some commenters suggest methods to educate the public about this issue, including: Publishing a safety guide, providing public outreach through traditional and social media, and offering information on the Web site: *www.saferproducts.gov,* in addition to: *www.cpsc.gov*.

(Response 13)—We agree that this is an extremely serious issue, and we are dedicated to public outreach and education campaigns that could prevent infant fatalities caused by unsafe sleep environments and practices. Safety guides, blogs, and videos addressing safe sleep are already available on the agency's Web site at: *www.cpsc.gov*. Additionally, we use traditional media channels, as well as popular social media outlets, such as Twitter, YouTube and Flickr, to disseminate information to the public about unsafe sleep environments and practices.

(Comment 14)—One commenter recommends that graphics or pictograms depicting the dangers of unsafe sleep environments be added to the existing warnings in the play yard standard in order to enhance their effectiveness.

(Response 14)—We believe that graphics depicted on warnings are useful and potentially can enhance the effectiveness of warnings. However, the development of an effective pictogram warning takes considerable testing to ensure that the graphic is not confusing or counterintuitive or does not lessen the effectiveness of current warnings. We continue to evaluate warnings on play yards and other children's products and will revise such warnings, as necessary.

14. Clearance Around Play Yards

(Comment 15)—One commenter is concerned about outside objects, such as window blind cords and computer cords, which can fall into the play yard and potentially strangle a child. The commenter feels that requiring a minimum clearance of 24 inches around a play yard would prevent children from reaching out and pulling window blind cords or other hazardous objects into the play yard.

(Response 15)—For children who are too young to climb out of the play yard, a minimum clearance of about 3 feet usually would suffice. However, once a child can climb out of the play yard, this minimum clearance has limited utility. For this reason, we feel that the existing required warning on play yards, advising parents to stop using the product once the child can climb out, is the most effective way to prevent these incidents. The ASTM standard also includes warnings that address the hazards of strings, cords, and window blind cords that may fall into the play yard.

15. Play Yard Covers

(Comment 16)—One commenter is concerned about fatalities that have occurred when caregivers place improvised covers on the play yard in an attempt to keep children in the product. In some instances, children were killed when attempting to climb

out of the play yard because they became trapped between the cover and the play yard side rail. The commenter feels that perhaps, there is a ''market failure in providing adequate, and adequately priced, covers.'' The commenter also suggests that play yard covers could be subject to mandatory regulations.

(Response 16)—Before a child can stand and reach a cover, the cover likely presents little risk. Once the child can reach it, the cover itself becomes a hazard. We are aware of two fatal incidents associated with covers and tents that can be affixed on top of play yards and cribs. In one incident, a child was able to tear the tent fabric and strangle in the loose strands. In the other incident, the child was able to deform the tent poles and become trapped beneath the mattress and the inverted poles. Because of these incidents, we recommend that consumers avoid using tents and covers on play yards and cribs. We believe that the following existing warning in section 9.4.2.6 of ASTM F406–12a is sufficient to address this hazard: ''Child can become entrapped and die when improvised netting or covers are placed on top of product. Never add such items to confine child in product.''

16. Risks Associated With Children Climbing Out of a Play Yard

(Comment 17)—One commenter feels that the CPSC has ''unnecessarily disregarded the idea to make the play yard walls higher'' as a way to prevent children from climbing out of the product.

(Response 17)—A designer of a play yard faces limited options for preventing children from climbing out of the product. The play yard is essentially a lidless box. Play yards that prevent climbing out would require either higher sides or lids to be effective. Both designs could introduce other problems that potentially are of more concern than the problem of climbing out of the play yard. For instance, making the sides higher increases the difficulty caregivers have placing their children, especially the youngest ones, into the play yard. This could increase the use of alternative sleeping arrangements, such as allowing children to sleep in adult beds, which can have serious hazards associated with them. Introducing a lid or some other kind of cover to a play yard creates more movable parts and the potential for mechanical failures that could lead to entrapment, entanglement, or strangulation.

We have been unable to identify a performance requirement for inclusion in the play yard standard that would effectively reduce incidents of children climbing out of play yards without simultaneously introducing other potential hazards. The current ASTM standard contains a warning advising parents to stop using the product once a child can climb out of the play yard. We feel that this is the most effective way to prevent injuries associated with children being able to climb out of play yards.

17. Standing/Choking Deaths

(Comment 18)—In the NPR, we reported that two toddlers were killed in separate incidents while standing up in a play yard. It is believed that they leaned forward against the side rail (perhaps to reach an object that the child had thrown outside the play yard), lost consciousness, or suffocated when the pressure from the side rail compressed their airway. One commenter asks that we continue to investigate these deaths and address this hazard.

(Response 18)—We are very concerned about these deaths. At this time, we are unable to explain how these children died; and thus, we are unable to comment on whether there are changes that could be made to play yard designs that would prevent fatalities like this from occurring. We have reached out to medical professionals and are continuing to collect information that might assist us in understanding the deaths and determining whether there is an engineering solution that could prevent them.

18. Hazards Related to Accessories

(Comment 19)—One commenter notes that the accessories that come with play yards can be dangerous. Specifically, the commenter feels that changing table attachments should come with restraints.

(Response 19)—There are strong arguments against changing table attachments having restraints, including the concern that the presence of restraints will give the consumer a false sense of security about the accessory. Restraints might lead to the caregiver walking away while the infant is left on the table. More troubling is the concern that parents mistakenly will use changing tables as a sleep environment, which is not the intended use of the product and can be very dangerous. Thus, we cannot recommend that changing tables have restraints.

(Comment 20)—One commenter requests that play yard accessories, such as changing tables and bassinets, be banned completely. Failing this, the commenter asks that these products be required to lock in place so that they cannot be manipulated by infants and toddlers. The commenter's 13-month-old daughter died when her head became trapped between a non-locking changing table attachment and side rail of a play yard.

(Response 20)—The current ASTM standard includes a requirement to address this hazard. It can be found in section 5.15 of ASTM F406–12a, titled, *Entrapment in Accessories*. The requirement was added in 2005. The standard requires that accessories not separate from a play yard when an infant-size head probe is pushed against the attachment from inside the play yard with 25 pounds of force. The pushing direction is varied to evaluate the security of the attachment to the play yard better. We feel that this test is adequate to address the hazard the commenter mentions, and we are not recommending any further action.

(Comment 21)—One commenter states that the cyclic testing required for rigid-sided products, contained in section 8.5 of ASTM F406–12a, should be required for mesh-sided products, such as play yards. The commenter states that a cyclic test would better assess the integrity of play yard accessory attachment points used to secure bassinets and changing tables to the side rails of play yards. The commenter recommends that the cyclic testing in section 8.5 of the ASTM standard be repeated with and without the attachments installed. The commenter states that it appears that many incidents reported to the CPSC occur when the accessory became unattached at one or more attachment points and that additional durability testing will ensure that the attachment points will hold through a lifetime of use.

(Response 21)—The purpose of the cyclic testing requirement, found in section 8.5, is to evaluate the attachment security of threaded fasteners, such as screws, used in rigid-sided products, specifically full- and non-full-size cribs. Of the accessories mentioned by the commenter, bassinet play yard accessories are of the greatest concern because they are intended to be used while an infant is sleeping unsupervised. The majority of play yard bassinet accessories are structureless, fabric shells that attach to the top rails of play yards. Because they have no structure of their own they will be substantially unaffected by this kind of cyclic testing. The attachment components in play yards typically consist of plastic clips, hook-and-loop (Velcro) straps, or snaps sewn into soft material around the inner perimeter of

the play yard. These attachment means are substantially different than the threaded fasteners this test is intended to evaluate. Thus, we feel that cyclic testing would not adequately test the durability of attachment points in play yard accessories.

We identified five incidents where the attachment points of a play yard bassinet accessory failed. None of the incidents resulted in an injury to the child. Three incidents were caused by weak fabric or poor stitching. These hazards are addressed in the ASTM standard for play yards at sections 7.7 and 7.8, which address the durability of fabric and the strength of seams. The other two incidents were caused by separated hook-and-loop (Velcro) closures. On one, the closure failed to secure during the consumer's first use of the product and permitted the sleep surface to tilt slightly. The consumer noticed the problem immediately. We have evaluated the incident and determined that it can be attributed, most likely, to poor quality control in the manufacturing process. In the other incident, the hook-and-loop closure, used as a back-up means of attachment, wore out over time. The concern is that if the primary attachment were to fail, the worn hook-and-loop closure might permit the sleep surface to tilt. However, in this case, because the hook-and-loop closure was a secondary means of attachment, the product did not cause an injury or incident.

We share the commenter's concern about the robustness of bassinet and cradle attachments, but we do not agree that requiring cyclic testing for the attachment points will address those concerns. At this point, we cannot recommend a performance requirement and test method that would reduce the risk of injury associated with this hazard. Incoming data will be monitored to ensure that any emerging trends are identified.

19. Mattress Vertical Displacement Test Repeatability

(Comment 22)—One commenter feels that the consistency of the mattress vertical displacement test could be improved by adding a provision that accounts for slack in the mattress.

(Response 22)—The change the commenter suggests will improve testing consistency for vertical mattress displacement by ensuring that free movement of fabric is taken up before establishing the initial clamp position reference point. It has already been approved by ASTM members and was published in ASTM F406–12. It is also contained in F406–12a. By incorporating by reference ASTM F406–12a, we support the inclusion of this clarification in the play yard mandatory standard.

20. Impact on Play Yard

(Comment 23)—One commenter states that small children have ''wobbly legs and can fall down'' and sustain an injury because the play yard is not secured firmly to the floor, or it might be placed on an unlevel floor. The commenter suggests securing play yards to the surface of hard floors with suction cups.

(Response 23)—Our incident data suggest that most children who are injured by falling in a play yard simply lose their balance. Thus, we disagree that children fall in play yards because the products are not secured firmly to the floor. However, even if that were the case, we disagree that suction cups will provide an improved attachment to hard surfaces. The length of time for which the suction effect can be maintained depends significantly on the porosity, flatness, and cleanliness of the floor surface. Furthermore, play yards typically are set up and taken down multiple times and are used on a multitude of indoor surfaces, including carpet, hardwood, and tile, as well as outdoor surfaces, such as grass or dirt. A consumer would not only have to inspect the suction cups for cleanliness and physical deformation before each use, but also remember to remove and install the suction cups, as needed, depending upon the floor surface. Therefore, we feel that requiring suction cups is not an adequate means of preventing injuries to children who fall in play yards.

21. Warnings Statements

(Comment 24)—One commenter notes that the ASTM standard does not require multilingual warnings, and they ask us to consider requiring them. The commenter argues that the use of multilingual warnings reasonably could be expected to reduce play yard injuries by educating caregivers who do not speak or read English.

(Response 24)—We are not opposed to the use of multilingual labels. Many manufacturers already use multilingual warnings, although currently, they are not required. We feel that play yard manufacturers are in the best position to determine who uses their product and decide when to create labels and instructional materials in other languages.

(Comment 25)—One commenter feels that the warning label on play yards requiring adult supervision while the child uses the product is unreasonable because you cannot reasonably expect a parent to supervise a child who is sleeping in a play yard.

(Response 25)—The warning label that this commenter refers to can be found in section 9.4.2.11 of ASTM F406–12a, and it advises caregivers: ''(a)lways provide the supervision necessary for the continued safety of your child. When used for playing, never leave child unattended.'' This warning is intended to address the use of play yards as a play environment, not as a sleep environment. We agree with the commenter that a caregiver is not expected to continuously supervise a child who is sleeping in a play yard. This warning is intended for caregivers who are using the product as a play environment.

22. Package and Product Marking To Indicate Compliance With the Mandatory Rule

(Comment 26)—One commenter recommends that products be marked clearly to enable a consumer to determine if the product was manufactured after the play yard mandatory standard became effective. This would enable consumers to discern easily which products comply with the mandatory rule, and which were manufactured before the standard became effective.

(Response 26)—A date code is already required to be on the product, under section 9.1.1.2 of ASTM F406–12a. In addition, future changes to the standard may come into effect. Because it is not practicable to delineate every change to the standard through a new mark on the product, we decline to take action.

E. Summary of ASTM F406–12a and Description of the Final Rule

For the play yard final rule, we are incorporating by reference ASTM F406–12a. The final rule excludes sections of ASTM F406–12a that apply to non-full-size cribs exclusively. In this section, we: (1) summarize the requirements of ASTM F406–12a; and (2) describe the final rule, listing the excluded provisions of ASTM F406–12a that only apply to non-full-size cribs.

1. Summary of ASTM F406–12a

In the NPR (76 FR 58169 through 58170), we described, in detail, the key provisions of ASTM F406–11 that apply to play yards. ASTM F406–12a differs from ASTM F406–11 in the following ways:

- It includes the three changes to the play yard standard we proposed in the NPR, specifically two clarifications to the testing method used to measure the strength of the play yard floor, and one change to the Top Rail to Corner Post

Attachment Test that would allow testers to choose the shape and area of the clamping surface, within a specified range. We reviewed the language that ASTM adopted and, while not exactly the same as the wording we proposed in the NPR, we believe it provides better clarity than what we proposed. By incorporating by reference ASTM F406–12a, we support the inclusion of these clarifications in the play yard mandatory standard.

- On its own initiative, the ASTM committee clarified the Top Rail to Corner Post Attachment Test, as well as the accompanying explanatory graphics. By incorporating by reference ASTM F406–12a, we support the inclusion of these clarifications in the play yard mandatory standard.
- A preload was added to the Mattress Vertical Displacement Test in order to improve testing consistency by ensuring that free movement of fabric is taken up before establishing the initial clamp position reference point. We also received a comment to the NPR suggesting this change. By incorporating by reference ASTM F406–12a, we support the inclusion of this clarification in the play yard mandatory standard.
- An exemption was included in the Top Rail Configuration requirement to exclude play yards with side rails that fold upward. The side rails of most play yards move downward vertically. If the side rail latch mechanisms are not locked properly, they can form a dangerous V-shape. If the child's neck is caught in the V-shape, the child could suffocate. Play yards with side rails that fold upward, however, do not create this risk. We also received a comment to the NPR suggesting this change. By incorporating by reference of ASTM F406–12a, we support the inclusion of this clarification in the play yard mandatory standard.

2. Description of the Final Rule

The final play yard rule incorporates by reference ASTM F406–12a, with several exclusions for provisions that apply to non-full-size cribs only. In the **Federal Register** of December 28, 2010 (75 FR 81766), we issued a final rule on safety standards for non-full-size cribs. Thus, the final rule excludes provisions of ASTM F406–12a that apply to non-full-size cribs, including the following:

- Section 5.17 of ASTM F406–12a, containing the requirements for mattresses in rigid-sided products;
- Section 5.19 of ASTM F406–12a, containing a provision to prevent misassembly in non-full-size cribs;
- Section 5.20 of ASTM F406–12a, containing record keeping requirements for non-full-size cribs;
- The entirety of section 6 of ASTM F406–12a, containing the performance requirements for rigid-sided products;
- Sections 8.1 through 8.10.5 of ASTM F406–12a, containing the test methods for rigid-sided products;
- A portion of section 9.4.2.10 of ASTM F406–12a, containing warning label requirements for nonrectangular cribs; and
- Section 10.1.1.1 of ASTM F406–12a, containing instructional literature requirements for non-full-size cribs.

F. Effective Date

The Administrative Procedure Act (APA) generally requires that the effective date of a rule be at least 30 days after publication of the final rule. 5 U.S.C. 553(d).

We are providing a 6-month effective date, as proposed in the NPR. This will give suppliers sufficient time to come into compliance with the mandatory standard.

G. Regulatory Flexibility Act

1. Introduction

The Regulatory Flexibility Act (RFA), 5 U.S.C. 601–605, requires that final rules be reviewed for their potential economic impact on small entities, including small businesses. Section 604 of the RFA requires that we prepare a final regulatory flexibility analysis when promulgating final rules. The final regulatory flexibility analysis must describe the impact of the rule on small entities and identify any alternatives that may reduce the impact. Specifically, the final regulatory flexibility analysis must contain:

1. A succinct statement of the need for, and objectives of, the rule;
2. A summary of the significant issues raised by the public comments in response to the initial regulatory flexibility analysis, a summary of the assessment of the agency of such issues, and a statement of any changes made in the proposed rule as a result of such comments;
3. A description of, and an estimate of, the number of small entities to which the rule will apply, or an explanation of why no such estimate is available;
4. A description of the projected reporting, recordkeeping, and other compliance requirements of the rule, including an estimate of the classes of small entities that will be subject to the requirement, and the type of professional skills necessary for preparation of the report or record; and
5. A description of the steps that the agency has taken to minimize the significant economic impact on small entities, consistent with the stated objectives of applicable statutes, including a statement of the factual, policy, and legal reasons for selecting the alternative adopted in the final rule, and why each one of the other significant alternatives to the rule considered by the agency that affect the impact on small entities was rejected.

2. The Market

There are 21 domestic firms known to be producing or selling play yards in the United States. Ten are domestic manufacturers, and 11 are domestic importers. Under the U.S. Small Business Administration (SBA) guidelines, a manufacturer of play yards is small if it has 500 or fewer employees, and an importer is considered small if it has 100 or fewer employees. Based on these guidelines, nine domestic manufacturers and 10 domestic importers known to supply play yards to the U.S. market are small businesses. The remaining domestic entities are one large manufacturer and one large importer. There are also three foreign firms supplying play yards to the U.S. market. There may be additional unknown small manufacturers and importers operating in the U.S. market.

The Juvenile Products Manufacturers Association (JPMA) runs a voluntary certification program for juvenile products. Certification under the JPMA program is based on the most recent ASTM voluntary play yard standard, typically with a 6-month delay. Six of the nine small manufacturers produce play yards that are certified as compliant with the ASTM voluntary play yard standard by the JPMA. Of the importers, three import play yards that have been certified as compliant with the ASTM voluntary standard. One additional importer claims compliance with the ASTM standard but is not JPMA certified.

3. Impact of the Standard on Small Businesses

a. Costs of Complying With the Voluntary Standard

The extent to which each firm will be impacted by the play yard mandatory standard depends upon whether the firm's play yards currently comply with the ASTM voluntary standard. Small firms whose play yards already comply with the voluntary standard will not incur any new costs. Many of these firms are active in the ASTM standard development process, and compliance with the voluntary standard is part of an established business practice. Thus, it is

likely that most of the firms that already comply with the ASTM standard would continue to do so, even in the absence of a mandatory regulation.

b. Small Domestic Manufacturers

Six of the small manufacturers produce play yards known to comply with the voluntary standard. Small firms whose play yards already comply with the voluntary standard will not incur any new costs. For the three manufacturing firms whose play yards may not be compliant with the voluntary standard, the costs could be more significant. Meeting the existing voluntary standard could require manufacturers to redesign their product. The impact on manufacturers who produce noncompliant play yards may be mitigated if the costs are treated as new product expenses and amortized over time.

This scenario also assumes that the three firms whose play yards are not JPMA certified do not meet the voluntary standard. In fact, we have identified many instances in which a juvenile product not certified by the JPMA complies with the ASTM voluntary standard. To the extent that these firms already may supply play yards that meet the ASTM voluntary standard, the costs incurred would be lower.

c. Small Domestic Importers

Four of the 10 small importers produce play yards known to comply with the voluntary standard. Three are certified by the JPMA, and one additional firm claims compliance with the ASTM standard. Small firms whose play yards already comply with the voluntary standard will not incur any new costs.

The costs to the six importers whose play yards may not be compliant with the voluntary standard could be more significant. Importers of play yards would need to find an alternate source if their existing supplier does not come into compliance with the standard. Purchasing compliant, higher quality play yards could increase the cost of the product.

This will not be an option for two of the noncompliant play yard importers because they specialize in the importation of play yards from a specific foreign company. Thus, finding an alternative supply source is probably not an option for them. These firms could respond to the rule by discontinuing the import of play yards. The impact of this decision could be mitigated by replacing play yards with a different infant or toddler product. Deciding to import an alternative infant or toddler product would be a reasonable and realistic way to offset any lost revenue.

As with manufacturers, to the extent that some of the firms believed to supply noncompliant play yards actually may supply play yards that meet the ASTM voluntary standard, the costs incurred would be lower.

4. Alternatives

An alternative that could minimize the economic impact on small business is providing an effective date longer than 6 months. However, the JPMA, which represents many play yard manufacturers, felt that a 6-month effective date was adequate to allow suppliers to come into compliance with the mandatory standard. We agree. Therefore, we have chosen a 6-month effective date for the play yard mandatory standard.

5. Issues Raised by Public Comment

We received several comments from the public in response to the initial regulatory flexibility analysis, including comments regarding the use of market data, the impact on small businesses, and the appropriate effective date. A summary of those comments and our responses can be found in part D of this preamble, titled, ''Response to Comments on the Proposed Rule.''

6. Conclusion of the Final Regulatory Flexibility Analysis

The impact of the final play yard rule on firms supplying non-ASTM-compliant play yards could be significant. However, the requirements of the final rule address known play yard hazard patterns and will help reduce injuries and deaths. We are providing a 6-month effective date as proposed in the NPR. This will give suppliers sufficient time to come into compliance with the mandatory standard and spread the costs over a longer period of time.

H. Environmental Considerations

The Commission's regulations address whether we are required to prepare an environmental assessment or an environmental impact statement. Our rules generally have ''little or no potential for affecting the human environment,'' and therefore, are exempt from any requirement to prepare an environmental assessment or impact statement. 16 CFR 1021.5(c)(1). This rule falls within the categorical exemption.

I. Paperwork Reduction Act

This rule contains information collection requirements that are subject to public comment and review by the Office of Management and Budget (OMB) under the Paperwork Reduction Act of 1995. The preamble to the proposed rule (76 FR 58173 through 58174) discussed the information collection burden of the proposed rule and specifically requested comments on the accuracy of our estimates. Briefly, sections 9 and 10 of ASTM F406–12a contain requirements for marking, labeling, and instructional literature. These requirements fall within the definition of ''collection of information,'' as defined in 44 U.S.C. 3502(3).

OMB has assigned control number 3041–0152 to this information collection. We did not receive any comments regarding the information collection burden of this proposal. However, the final rule makes modifications regarding the information collection burden because the number of estimated suppliers subject to the information collection burden is now estimated to be 24 firms rather than the nine firms initially estimated in the proposed rule.

Accordingly, the estimated burden of this collection of information is modified as follows:

TABLE 1—ESTIMATED ANNUAL REPORTING BURDEN

16 CFR section	Number of respondents	Frequency of responses	Total annual responses	Hours per response	Total burden hours
1221.2(a)	24	3	72	1	72

There are 24 known firms supplying play yards to the U.S. market. All 24 firms are assumed to use labels already on both their products and their packaging, but they might need to make some modifications to their existing

labels. The estimated time required to make these modifications is about 1 hour per model. Each entity supplies an average of three different models of play yards; therefore, the estimated burden associated with labels is 1 hour per model × 24 entities × 3 models per entity = 72 hours. We estimate the hourly compensation for the time required to create and update labels is $28.36 (U.S. Bureau of Labor Statistics, ''Employer Costs for Employee Compensation,'' September 2011, Table 9, total compensation for all sales and office workers in goods-producing private industries: *http://www.bls.gov/ncs/*). Therefore, the estimated annual cost to industry associated with the labeling requirements is $2,041.92 ($28.36 per hour × 72 hours = $2,041.92). There are no operating, maintenance, or capital costs associated with the collection.

In compliance with the Paperwork Reduction Act of 1995 (44 U.S.C. 3507(d)), we have submitted the information collection requirements of this final rule to the OMB.

J. Preemption

Section 26(a) of the Consumer Product Safety Act (CPSA), 15 U.S.C. 2075(a), provides that where a consumer product safety standard is in effect and applies to a product, no state or political subdivision of a state may establish or continue in effect a requirement dealing with the same risk of injury, unless the state's requirement is identical to the federal standard. Section 26(c) of the CPSA also provides that states or political subdivisions of states may apply to the Commission for an exemption from this preemption under certain circumstances. Section 104(b) of the CPSIA refers to the rules to be issued under that section as ''consumer product safety rules,'' thus, implying that the preemptive effect of section 26(a) of the CPSA would apply. Therefore, a rule issued under section 104 of the CPSIA will invoke the preemptive effect of section 26(a) of the CPSA when the rule becomes effective.

K. Certification

Once in effect, the final rule on play yards will make it unlawful for anyone to manufacture, distribute, or import a play yard into the United States that is not in conformity with the standard. 15 U.S.C. 2068(1). Pursuant to section 14(a)(2) of the CPSA, play yards must be certified by the manufacturer to the final standard based on testing conducted by a CPSC-accepted third party conformity assessment body. The third party testing and certification requirement for play yards will not be in effect until we issue a final notice of requirements (NOR). The final NOR establishes requirements for how third party conformity assessment bodies can become accepted by us to test play yards to the final rule. A proposed NOR for play yards was published in the **Federal Register** on May 24, 2012, as part of an NPR titled, ''Requirements Pertaining to Third Party Conformity Assessment Bodies.'' 77 FR 31086. When the final rule is effective and the NOR is final, third party conformity assessment bodies can apply to us for acceptance of their accreditation to test play yards. Play yard manufacturers will be required to certify products to the final play yard rule based on third party testing once we have accepted the accreditation of such laboratories.

List of Subjects in 16 CFR Part 1221

Consumer protection, Imports, Incorporation by reference, Infants and children, Labeling, Law enforcement, Safety and toys.

Therefore, the Commission amends Title 16 of the Code of Federal Regulations by adding part 1221 to read as follows:

PART 1221—SAFETY STANDARD FOR PLAY YARDS

Sec.
1221.1 Scope.
1221.2 Requirements for play yards.

Authority: The Consumer Product Safety Improvement Act of 2008, Pub. L. 110–314, section 104, 122 Stat. 3016 (August 14, 2008).

§ 1221.1 Scope.

This part establishes a consumer product safety standard for play yards manufactured or imported on or after February 28, 2013.

§ 1221.2 Requirements for play yards.

(a) Except as provided in paragraph (b) of this section, each play yard must comply with all applicable provisions of ASTM F406–12a, Standard Consumer Safety Specification for Non-Full-Size Baby Cribs/Play Yards, approved on May 1, 2012. The Director of the Federal Register approves this incorporation by reference in accordance with 5 U.S.C. 552(a) and 1 CFR part 51. You may obtain a copy from ASTM International, 100 Bar Harbor Drive, P.O. Box 0700, West Conshohocken, PA 19428; *http://www.astm.org.* You may inspect a copy at the Office of the Secretary, U.S. Consumer Product Safety Commission, Room 820, 4330 East-West Highway, Bethesda, MD 20814, telephone 301–504–7923, or at the National Archives and Records Administration (NARA). For information on the availability of this material at NARA, call 202–741–6030, or go to: *http://www.archives.gov/federal_register/code_of_federal_regulations/ibr_locations.html.*

(b) Comply with the ASTM F406–12a standard with the following exclusions:

(1) Do not comply with section 5.17 of ASTM F406–12a.

(2) Do not comply with section 5.19 of ASTM F406–12a.

(3) Do not comply with section 5.20 of ASTM F406–12a.

(4) Do not comply with section 6, Performance Requirements for Rigid-Sided Products, of ASTM F406–12a, in its entirety.

(5) Do not comply with sections 8.1 through 8.10.5 of ASTM F406–12a.

(6) Instead of complying with section 9.4.2.10 of ASTM F406–12a, comply with only the following:

(i) 9.4.2.10 For products that have a separate mattress that is not permanently fixed in place: Use ONLY mattress/pad provided by manufacturer.

(ii) [Reserved].

(7) Do not comply with section 10.1.1.1 of ASTM F406–12a.

Dated: August 23, 2012.

Todd A. Stevenson,

Secretary, Consumer Product Safety Commission.

[FR Doc. 2012–21168 Filed 8–28–12; 8:45 am]

BILLING CODE 6355–01–P

DEPARTMENT OF HEALTH AND HUMAN SERVICES

Food and Drug Administration

21 CFR Part 172

[Docket No. FDA–2009–F–0570]

Food Additives Permitted for Direct Addition to Food for Human Consumption; Vitamin D_2 Bakers Yeast

AGENCY: Food and Drug Administration, HHS.

ACTION: Final rule.

SUMMARY: The Food and Drug Administration (FDA) is amending the food additive regulations to provide for the safe use of vitamin D_2 bakers yeast as a source of vitamin D_2 and as a leavening agent in yeast-leavened baked products at levels not to exceed 400 International Units (IU) of vitamin D_2 per 100 grams (g) in the finished food. This action is in response to a petition filed by Lallemand, Inc. (Lallemand).

DATES: This rule is effective August 29, 2012. Submit either electronic or written objections and requests for a hearing by September 28, 2012. See section VII of this document for information on filing objections.

ADDRESSES: You may submit either electronic or written objections and requests for a hearing, identified by Docket No. FDA–2009–F–0570, by any of the following methods:

Electronic Submissions

Submit electronic objections in the following way:

• *Federal eRulemaking Portal: http://www.regulations.gov.* Follow the instructions for submitting comments.

Written Submissions

Submit written objections in the following ways:

• *FAX:* 301–827–6870.

• *Mail/Hand delivery/Courier (for paper or CD–ROM submissions):* Division of Dockets Management (HFA–305), Food and Drug Administration, 5630 Fishers Lane, Rm. 1061, Rockville, MD 20852.

Instructions: All submissions received must include the Agency name and Docket No. FDA–2009–F–0570. All objections received will be posted without change to *http://www.regulations.gov,* including any personal information provided. For detailed instructions on submitting objections, see the ''Objections'' heading of the **SUPPLEMENTARY INFORMATION** section of this document.

Docket: For access to the docket to read background documents or objections received, go to *http://www.regulations.gov* and insert the docket number, found in brackets in the heading of this document, into the ''Search'' box and follow the prompts and/or go to the Division of Dockets Management, 5630 Fishers Lane, Rm. 1061, Rockville, MD 20852.

FOR FURTHER INFORMATION CONTACT: Judith Kidwell, Center for Food Safety and Applied Nutrition (HFS–265), Food and Drug Administration, 5100 Paint Branch Pkwy, College Park, MD 20740, 240–402–1071.

SUPPLEMENTARY INFORMATION:

I. Introduction

In a notice published in the **Federal Register** of December 17, 2009 (74 FR 66979), FDA announced that a food additive petition (FAP 9A4779) had been filed by Lallemand, Inc., c/o Dennis T. Gordon, 117 N. Welcome Slough Rd., Puget Island, Cathlamet, WA 98612. The petition proposed to amend the food additive regulations in part 172—*Food Additives Permitted for Direct Addition to Food for Human Consumption* (21 CFR part 172), to provide for the safe use of vitamin D_2 bakers yeast as a dual purpose nutrient supplement and leavening agent or dough relaxer in yeast-containing baked products at levels not to exceed 400 IU of vitamin D_2 per 100 g in the finished food. The specific foods identified by the petition in which the additive will be used are yeast-leavened baked goods and baking mixes and yeast-leavened baked snack foods. After the notice was published, Lallemand amended the petition to exclude the proposed use of the additive as a dough relaxer.

Vitamin D,[1] including Vitamin D_2, is affirmed as generally recognized as safe (GRAS) for use in food as a nutrient supplement in § 184.1950(c)(1) (21 CFR 184.1950(c)(1)) in accordance with § 184.1(b)(2) (21 CFR 184.1(b)(2)), with the following specific limitations:

Category of food	Maximum levels in food (as served)
Breakfast cereals	350 IU/100 g.
Grain products and pasta	90 IU/100 g.
Milk	42 IU/100 g.
Milk products	89 IU/100 g.

Additionally, under §§ 184.1950(c)(2) and (c)(3), vitamin D is affirmed as GRAS for use in infant formulas and margarine, respectively. Under § 172.380, vitamin D_3 is approved for use as a nutrient supplement in calcium-fortified fruit juices and fruit juice drinks; meal replacement and other type bars, soy protein-based meal replacement beverages represented for special dietary use in reducing or maintaining body weight; and cheese and cheese products as defined therein. Under § 172.379, vitamin D_2 is approved for use as a nutrient supplement in soy beverages, soy beverage products, soy-based butter substitute spreads, and soy-based cheese substitutes and soy-based cheese substitute products.

Vitamin D_2, also known as ergocalciferol, is the chemical 9,10-seco(5Z,7E,22E)-5,7,10(19),22-ergostatetraen-3-ol. The additive that is the subject of this petition is vitamin D_2 bakers yeast that is produced by exposing bakers yeast (*Saccharomyces cerevisiae*) to ultraviolet (UV) light, resulting in increased conversion of endogenous ergosterol to ergocalciferol. The vitamin D_2 in the UV light-treated bakers yeast is the same substance affirmed as GRAS in § 184.1950 and approved for use as a nutrient supplement in § 172.379.

Vitamin D is essential for human health. The major function of vitamin D is the maintenance of blood serum concentrations of calcium and phosphorus by enhancing the absorption of these minerals in the small intestine. Vitamin D deficiency can lead to abnormalities in calcium and bone metabolism such as rickets in children or osteomalacia in adults. Excessive intake of vitamin D elevates blood plasma calcium levels by increased intestinal absorption and/or mobilization from the bone.

To ensure that vitamin D is not added to the U.S. food supply at levels that could raise safety concerns, FDA affirmed vitamin D as GRAS with specific limitations as listed in § 184.1950. Under § 184.1(b)(2), an ingredient affirmed as GRAS with specific limitations may be used in food only within such limitations, including the category of food, functional use, and level of use. Any addition of vitamin D to food beyond those limitations set out in § 184.1950 requires either a food additive regulation or an amendment of § 184.1950.

To support the safety of the proposed uses of vitamin D_2 bakers yeast, Lallemand performed analyses for the presence of any potential toxic precursor sterol components in UV light-treated bakers yeast. In addition, Lallemand submitted dietary intake estimates of vitamin D from the proposed uses of vitamin D_2 bakers yeast, currently-regulated uses of vitamin D, and from naturally-occurring sources of vitamin D. They compared these intake estimates to the Tolerable Upper Intake Level (UL) for vitamin D established by the Institute of Medicine (IOM) of the National Academies. Lallemand also submitted a number of publications pertaining to human clinical studies on vitamin D. Based on this information, which is discussed in section II of this document, Lallemand concluded that the proposed uses of vitamin D_2 bakers yeast in yeast-leavened baked products are safe.

II. Evaluation of Safety

A. UV Light-Treated Bakers Yeast

To support the safety of UV light-treated bakers yeast, Lallemand performed analyses to demonstrate that UV light treatment of bakers yeast does not produce additional sterols of toxicological concern. Lallemand provided chromatograms of extracts of UV light-treated and non-UV light-treated bakers yeast, and identified the substances present in the yeast extracts. One of the substances identified, tachysterol, is a photoisomer resulting from UV light treatment of the vitamin D precursor, pre-vitamin D. Tachysterol is a biologically inactive pre-vitamin form of vitamin D. Lallemand

[1] Vitamin D comprises a group of fat-soluble seco-sterols and comes in many forms. The two major physiologically relevant forms are vitamin D_2 and vitamin D_3. Vitamin D without a subscript represents either vitamin D_2 or vitamin D_3.

concluded that the small amount of tachysterol present in vitamin D_2 bakers yeast was insignificant and did not pose a toxicological concern.

A second photoisomer, lumisterol, is also typically formed from UV light treatment of pre-vitamin D. Lallemand reported that they did not detect lumisterol in the UV light-treated samples. Because tachysterol is reported as the predominant photoisomer produced at the UV wavelength used to make vitamin D_2 bakers yeast, it is reasonable that lumisterol would not be present at a detectable amount.

Other substances identified from the chromatograms were pre-vitamin D_2 (nonactive form of vitamin D_2), vitamin D_2, and ergosterol (naturally present in yeast). No other substances related to UV light treatment of bakers yeast were observed.

B. Vitamin D

To establish with reasonable certainty that a food additive is not harmful under its intended conditions of use, FDA considers the projected human dietary intake of the additive, the additive's toxicological data, and other relevant information (such as published literature) available to the Agency. FDA compares an individual's estimated daily intake (EDI) of the additive from all food sources to an acceptable intake level established by toxicological data. The EDI is determined by projections based on the amount of the additive proposed for use in particular foods and on data regarding the amount consumed from all food sources of the additive. The Agency commonly uses the EDI for the 90th percentile consumer of a food additive as a measure of high chronic dietary intake.

1. Estimated Daily Intake for Vitamin D

Lallemand provided mean and 90th percentile vitamin D intake estimates for consumers of yeast-leavened baked products from: (1) The proposed food uses of vitamin D_2 bakers yeast; (2) current food uses of vitamin D (including regulated uses, naturally-occurring sources of vitamin D, and dietary supplements); and (3) combined current and proposed food uses. Lallemand provided intake estimates for the overall U.S. population (1 year of age and older) and nine population subgroups (including infants less than 12 months of age). The Agency has determined that the methodology used to calculate these estimates is appropriate.

Lallemand's estimate of intake of vitamin D from all food sources for the overall U.S. population (1 year of age and older), including consumers of the yeast-leavened baked products identified in the petition, was 1,670 IU per person per day (IU/p/d) for the 90th percentile consumer. For the population subgroup of infants less than 12 months of age, including consumers of the yeast-leavened baked products identified in the petition, the dietary intake of vitamin D from all food sources was estimated to be 969 IU/p/d for the 90th percentile consumer. FDA concurs with these intake estimates.

2. Acceptable Intake Level for Vitamin D

In 1997, the Standing Committee on the Scientific Evaluation of Dietary Reference Intakes of the Food and Nutrition Board at the IOM conducted an extensive review of toxicology and metabolism studies on vitamin D published through 1996. The IOM published a detailed report that included a UL for vitamin D for infants, children, and adults. At that time, the IOM established a UL for vitamin D of 2,000 IU/per day (p/d) for children 1 to 18 years of age and adults. The UL for all infants was 1,000 IU/p/d.

More recently, the IOM conducted an extensive review of relevant published scientific literature on vitamin D to update current dietary reference intakes and ULs for vitamin D. Based on more recent information, the IOM revised the ULs for vitamin D and developed a report on their findings.[2] In their current assessment of vitamin D, the IOM determined a UL of 1,000 IU/p/d for infants 0 months to 6 months of age and a UL of 1,500 IU/p/d for infants 6 months to 12 months of age. For children 1 year to 3 years of age, the UL was determined to be 2,500 IU/p/d; for children 4 years to 8 years of age, the UL was determined to be 3,000 IU/p/d. For children 9 years to 18 years of age and adults, the UL was determined to be 4,000 IU/p/d.

The IOM considers the UL as the highest usual intake level of a nutrient that poses no risk of adverse effects when the nutrient is consumed over long periods of time. The UL is determined using a risk assessment model developed specifically for nutrients and considers intake from all sources: food, water, nutrient supplements, and pharmacological agents. The dose-response assessment, which concludes with an estimate of the UL, is built upon three toxicological concepts commonly used in assessing the risk of exposures to chemical substances: No-observed-adverse-effect level, lowest-observed-effect level, and an uncertainty factor.

C. Safety Assessment

FDA reviewed and evaluated the information submitted by Lallemand regarding the safety of UV light-treated bakers yeast. FDA concludes that the use of UV light-treated bakers yeast does not pose a safety concern, since the UV light treatment has been shown not to produce any new components of toxicological concern that could be introduced into the diet (see section II.A of this document).

In addition, FDA reviewed and evaluated the information submitted by Lallemand regarding the safety of the dietary intake of vitamin D_2 that would result from the proposed uses of vitamin D_2 bakers yeast. Lallemand submitted scientific articles published subsequent to the 1997 IOM report and issuance of the March 16, 2009, final rule (74 FR 11019) for the use of vitamin D_2 in soy-based food products. Lallemand concluded that these recent publications continue to support vitamin D supplementation in humans. FDA concurs with Lallemand's conclusion.

FDA considered the ULs established by the IOM relative to the intake estimates provided by Lallemand as the primary basis for assessing the safety of petitioned uses of vitamin D. FDA also reviewed the scientific articles submitted by Lallemand. Finally, FDA reviewed studies on vitamin D that have published since the Agency's evaluation of four previous food additive petitions for fortifying a variety of foods with vitamin D. The most recent petition resulted in FDA's amendment of the food additive regulations in § 172.379 to allow for the safe use of vitamin D_2 as a nutrient supplement in soy-based food products (74 FR 11019, March 16, 2009). The three earlier food additive petitions also resulted in amendments of the food additive regulations to allow for the safe use of vitamin D_3 as a nutrient supplement in certain foods (70 FR 69435, November 16, 2005; 70 FR 37255, June 29, 2005; 70 FR 36021, June 22, 2005; and 68 FR 9000, February 27, 2003).

Depending on the age group, the IOM ULs for the U.S. population 1 year of age and older range from 2,500 IU/p/d to 4,000 IU/p/d. The estimated intake of vitamin D from all food sources, including the proposed uses, at the 90th percentile for the overall U.S. population (1 year of age and older) is estimated to be 1,670 IU/p/d, which is below the lowest IOM UL in the range of ULs for the overall U.S. population (1 year of age and older). For infants less

[2] Committee to Review Dietary Reference Intakes for Vitamin D and Calcium, Food and Nutrition Board, Institute of Medicine, ''Dietary Reference Intakes for Calcium and Vitamin D,'' National Academies Press, Washington, DC, 2011.

than 12 months of age, the estimated intake of vitamin D from all food sources, including the proposed uses, at the 90th percentile is 969 IU/p/d, which is below both the IOM UL of 1,000 IU/p/d for infants 0 months to 6 months of age and the IOM UL of 1,500 IU/p/d for infants 6 months to 12 months of age. Because the 90th percentile EDI of vitamin D from all current and proposed food sources calculated for each population group is less than the corresponding IOM UL for that population group, the Agency concludes that dietary intake of vitamin D_2 bakers yeast from its proposed uses as a source of vitamin D_2 and as a leavening agent in yeast-leavened baked products will not pose a safety concern.

III. Conclusion

Based on all data relevant to vitamin D_2 bakers yeast reviewed by the Agency, FDA concludes that there is a reasonable certainty that no harm will result from the use of vitamin D_2 bakers yeast as a source of vitamin D_2 and as a leavening agent in yeast-leavened baked products within the limits proposed by Lallemand. Thus, vitamin D_2 bakers yeast is safe for the proposed uses, and the Agency concludes that the food additive regulations should be amended as set forth in this document.

IV. Public Disclosure

In accordance with § 171.1(h) (21 CFR 171.1(h)), the petition and the documents that FDA considered and relied upon in reaching its decision to approve the petition will be made available for inspection at the Center for Food Safety and Applied Nutrition by appointment with the information contact person (see **FOR FURTHER INFORMATION CONTACT**). As provided in § 171.1(h), the Agency will delete from the documents any materials that are not available for public disclosure before making the documents available for inspection.

V. Environmental Impact

The Agency has previously considered the environmental effects of this rule as announced in the notice of filing for FAP 9A4779 (74 FR 66979). No new information or comments have been received that would affect the Agency's previous determination that there is no significant impact on the human environment and that an environmental impact statement is not required.

VI. Paperwork Reduction Act of 1995

This final rule contains no collection of information. Therefore, clearance by the Office of Management and Budget under the Paperwork Reduction Act of 1995 is not required.

VII. Objections

Any person who will be adversely affected by this regulation may file with the Division of Dockets Management (see **ADDRESSES**) either electronic or written objections. Each objection must be separately numbered, and each numbered objection must specify with particularity the provisions of the regulation to which objection is made and the grounds for the objection. Each numbered objection on which a hearing is requested must specifically so state. Failure to request a hearing for any particular objection constitutes a waiver of the right to a hearing on that objection. Each numbered objection for which a hearing is requested must include a detailed description and analysis of the specific factual information intended to be presented in support of the objection in the event that a hearing is held. Failure to include such a description and analysis for any particular objection constitutes a waiver of the right to a hearing on the objection. It is only necessary to send one set of documents. Identify documents with the docket number found in brackets in the heading of this document. Any objections received in response to the regulation may be seen in the Division of Dockets Management between 9 a.m. and 4 p.m., Monday through Friday.

VIII. Section 301(ll) of the Federal Food, Drug, and Cosmetic Act (FD&C Act)

FDA's review of this petition was limited to section 409 of the FD&C Act (21 U.S.C. 348). This final rule is not a statement regarding compliance with other sections of the FD&C Act. For example, the Food and Drug Administration Amendments Act of 2007, which was signed into law on September 27, 2007, amended the FD&C Act to, among other things, add section 301(ll) (21 U.S.C. 331(ll)). Section 301(ll) of the FD&C Act prohibits the introduction or delivery for introduction into interstate commerce of any food that contains a drug approved under section 505 of the FD&C Act (21 U.S.C. 355), a biological product licensed under section 351 of the Public Health Service Act (42 U.S.C. 262), or a drug or biological product for which substantial clinical investigations have been instituted and their existence has been made public, unless one of the exemptions in section 301(ll)(1) to (ll)(4) of the FD&C Act applies. In our review of this petition, FDA did not consider whether section 301(ll) of the FD&C Act or any of its exemptions apply to food containing this additive. Accordingly, this final rule should not be construed to be a statement that a food containing this additive, if introduced or delivered for introduction into interstate commerce, would not violate section 301(ll) of the FD&C Act. Furthermore, this language is included in all food additive final rules and therefore should not be construed to be a statement of the likelihood that section 301(ll) of the FD&C Act applies.

List of Subjects in 21 CFR Part 172

Food additives, Reporting and recordkeeping requirements.

Therefore, under the Federal Food, Drug, and Cosmetic Act and under authority delegated to the Commissioner of Food and Drugs and redelegated to the Director, Center for Food Safety and Applied Nutrition, 21 CFR part 172 is amended as follows:

PART 172—FOOD ADDITIVES PERMITTED FOR DIRECT ADDITION TO FOOD FOR HUMAN CONSUMPTION

■ 1. The authority citation for 21 CFR part 172 continues to read as follows:

Authority: 21 U.S.C. 321, 341, 342, 348, 371, 379e.

■ 2. Section 172.381 is added to subpart D to read as follows:

§ 172.381 Vitamin D_2 bakers yeast.

Vitamin D_2 bakers yeast may be used safely in foods as a source of vitamin D_2 and as a leavening agent in accordance with the following prescribed conditions:

(a) Vitamin D_2 bakers yeast is the substance produced by exposing bakers yeast (*Saccharomyces cerevisiae*) to ultraviolet light, resulting in the photochemical conversion of endogenous ergosterol in bakers yeast to vitamin D_2 (also known as ergocalciferol or (9,10-seco(5Z,7E,22E)-5,7,10(19),22-ergostatetraen-3-ol)).

(b) Vitamin D_2 bakers yeast may be used alone as an active dry yeast concentrate or in combination with conventional bakers yeast.

(c) The additive may be used in yeast-leavened baked goods and baking mixes and yeast-leavened baked snack foods at levels not to exceed 400 International Units of vitamin D_2 per 100 grams in the finished food.

(d) To assure safe use of the additive, the label or labeling of the food additive container shall bear, in addition to the other information required by the Federal Food, Drug, and Cosmetic Act, adequate directions for use to provide a final product that complies with the

limitations prescribed in paragraph (c) of this section.

(e) Labels of manufactured food products containing the additive shall bear, in the ingredient statement, the name of the additive, ''vitamin D_2 bakers yeast,'' in the proper order of decreasing predominance in the finished food.

Dated: August 20, 2012.

Kirk B. Arvidson,

Acting Director, Office of Food Additive Safety, Center for Food Safety and Applied Nutrition.

[FR Doc. 2012–21353 Filed 8–28–12; 8:45 am]

BILLING CODE 4160–01–P

ENVIRONMENTAL PROTECTION AGENCY

40 CFR Part 52

[EPA–R04–OAR–2012–0323; FRL–9720–8]

Approval and Promulgation of Implementation Plans and Designations of Areas for Air Quality Planning Purposes; Tennessee: Bristol; Determination of Attaining Data for the 2008 Lead Standards

AGENCY: Environmental Protection Agency (EPA).

ACTION: Final rule.

SUMMARY: EPA is taking final action to determine that the Bristol nonattainment area (hereafter also referred to as the ''Bristol Area'' or ''Area'') has attained the 2008 lead NAAQS. On April 4, 2012, the State of Tennessee, through the Tennessee Department of Environment and Conservation, submitted a request to EPA to make a determination that the Bristol nonattainment area for the 2008 lead national ambient air quality standards (NAAQS or standard) has attained the 2008 lead NAAQS. This determination of attaining data is based upon complete, quality-assured and certified ambient air monitoring data for the 2009–2011 period showing that the Area has monitored attainment of the 2008 lead NAAQS. Additionally, as a result of this determination, EPA is taking final action to suspend the requirements for the Area to submit an attainment demonstration, together with reasonably available control measures (RACM), a reasonable further progress (RFP) plan, and contingency measures for failure to meet RFP and attainment deadlines for so long as the Area continues to attain the 2008 lead NAAQS.

DATES: *Effective Date:* This final rule is effective on September 28, 2012.

ADDRESSES: EPA has established a docket for this action under Docket ID Number EPA–R04–OAR–2012–0323. All documents in the docket are listed in the *www.regulations.gov* Web site. Although listed in the electronic docket, some information is not publicly available, i.e., confidential business information or other information whose disclosure is restricted by statute. Certain other material, such as copyrighted material, is not placed on the Internet and will be publicly available only in hard copy form. Publicly available docket materials are available either electronically through *www.regulations.gov* or in hard copy for public inspection during normal business hours at the Regulatory Development Section, Air Planning Branch, Air, Pesticides and Toxics Management Division, U.S. Environmental Protection Agency, Region 4, 61 Forsyth Street SW., Atlanta, Georgia 30303–8960.

FOR FURTHER INFORMATION CONTACT: Steve Scofield or Zuri Farngalo, Regulatory Development Section, Air Planning Branch, Air, Pesticides and Toxics Management Division, U.S. Environmental Protection Agency, Region 4, 61 Forsyth Street SW., Atlanta, Georgia 30303–8960. Mr. Scofield may be reached by phone at (404) 562–9034 or via electronic mail at *scofield.steve@epa.gov*. Mr. Farngalo may be reached by phone at (404) 562–9152 or via electronic mail at *farngalo.zuri@epa.gov*.

SUPPLEMENTARY INFORMATION:

I. What action is EPA taking?
II. What is the effect of this action?
III. What is EPA's final action?
IV. Statutory and Executive Order Reviews

I. What action is EPA taking?

EPA is taking final action to determine that the Bristol Area (comprising the portion of Sullivan County bounded by a 1.25 kilometer radius surrounding the Universal Transverse Mercator (UTM) coordinates 4042923 meters E, 386267 meters N, Zone 17, which surrounds the Exide Technologies Facility) has attaining data for the 2008 lead NAAQS. This clean data determination is based upon quality assured, quality controlled and certified ambient air monitoring data that shows the Area has monitored attainment of the 2008 lead NAAQS based on the 2009–2011 data. While still preliminary, the available 2012 monitoring data also monitored attainment for the 2008 lead NAAQS.

Other specific requirements of the clean data determination and the rationale for EPA's action are explained in the Notice of Proposed Rulemaking (NPR) published on June 14, 2012 (77 FR 35652) and will not be restated here. The comment period closed on July 16, 2012. No comments, adverse or otherwise, were received in response to the NPR.

II. What is the effect of this action?

This final action suspends the requirements for this Area to submit an attainment demonstration, associated RACM, RFP plan, and contingency measures for failure to meet RFP and attainment deadlines so long as this Area continues to meet the 2008 lead NAAQS. Finalizing this action does not constitute a redesignation of the Bristol Area to attainment for the 2008 lead NAAQS under section 107(d)(3) of the Clean Air Act (CAA). Further, finalizing this action does not involve approving a maintenance plan for the Area as required under section 175A of the CAA, nor does it involve a determination that the Area has met all requirements for a redesignation.

III. What is EPA's final action?

EPA is taking final action to determine that the Bristol Area has attaining data for the 2008 lead NAAQS. This clean data determination is based upon quality assured, quality controlled, and certified ambient air monitoring data showing that this Area has monitored attainment of the 2008 lead NAAQS during the period 2009–2011. This final action suspends the requirements for this Area to submit an attainment demonstration, associated RACM, RFP plans, and contingency measures for failure to meet RFP and attainment deadlines so long as this Area continues to meet the 2008 lead NAAQS. EPA is taking this final action because it is in accordance with the CAA and EPA policy and guidance.

IV. Statutory and Executive Order Reviews

Under Executive Order 12866 (58 FR 51735, October 4, 1993), this action is not a ''significant regulatory action'' and therefore is not subject to review by the Office of Management and Budget. For this reason, this action is also not subject to Executive Order 13211, ''Actions Concerning Regulations that Significantly Affect Energy Supply, Distribution, or Use'' (66 FR 28355, May 22, 2001). This action makes the determination based on air quality data, and suspends certain federal requirements. Accordingly, the Administrator certifies that this rule will not have a significant economic impact on a substantial number of small entities under the Regulatory Flexibility

Act (5 U.S.C. 601, *et seq.*). Because this rule makes a determination based on air quality data and suspends certain federal requirements, it does not contain any unfunded mandate or significantly or uniquely affect small governments, as described in the Unfunded Mandates Reform Act of 1995 (Pub. L. 104–4). This rule also does not have tribal implications because it will not have a substantial direct effect on one or more Indian tribes, on the relationship between the Federal Government and Indian tribes, or on the distribution of power and responsibilities between the Federal Government and Indian tribes, as specified by Executive Order 13175 (65 FR 67249, November 9, 2000). This action also does not have Federalism implications because it does not have substantial direct effects on the states, on the relationship between the national government and the states, or on the distribution of power and responsibilities among the various levels of government, as specified in Executive Order 13132 (64 FR 43255, August 10, 1999), because it only proposes to make a determination based on air quality data and suspend certain federal requirements, and does not alter the relationship or the distribution of power and responsibilities established in the CAA. This rule also is not subject to Executive Order 13045 ''Protection of Children from Environmental Health Risks and Safety Risks'' (62 FR 19885, April 23, 1997), because it proposes to determine that air quality in the affected area is meeting federal standards. The requirements of section 12(d) of the National Technology Transfer and Advancement Act of 1995 (15 U.S.C. 272 note) do not apply because it would be inconsistent with applicable law for EPA, when determining the attainment status of an area, to use voluntary consensus standards in place of promulgated air quality standards and monitoring procedures that otherwise satisfy the provisions of the CAA. This rule does not impose an information collection burden under the provisions of the Paperwork Reduction Act of 1995 (44 U.S.C. 3501, *et seq.*). Under Executive Order 12898, EPA finds that this rule involves a proposed determination of attainment based on air quality data and will not have disproportionately high and adverse human health or environmental effects on any communities in the area, including minority and low-income.

The Congressional Review Act, 5 U.S.C. 801 *et seq.,* as added by the Small Business Regulatory Enforcement Fairness Act of 1996, generally provides that before a rule may take effect, the agency promulgating the rule must submit a rule report, which includes a copy of the rule, to each House of the Congress and to the Comptroller General of the United States. EPA will submit a report containing this action and other required information to the U.S. Senate, the U.S. House of Representatives, and the Comptroller General of the United States prior to publication of the rule in the **Federal Register**. A major rule cannot take effect until 60 days after it is published in the **Federal Register**. This action is not a ''major rule'' as defined by 5 U.S.C. 804(2).

Under section 307(b)(1) of the CAA, petitions for judicial review of this action must be filed in the United States Court of Appeals for the appropriate circuit by October 29, 2012. Filing a petition for reconsideration by the Administrator of this final rule does not affect the finality of this action for the purposes of judicial review nor does it extend the time within which a petition for judicial review may be filed, and shall not postpone the effectiveness of such rule or action. This action, pertaining to the determination of attaining data for the 2008 lead standard for the Bristol Area, may not be challenged later in proceedings to enforce its requirements. *See* section 307(b)(2).

List of Subjects in 40 CFR Part 52

Environmental protection, Air pollution control, Lead, Reporting and recordkeeping requirements.

Dated: August 13, 2012.

A. Stanley Meiburg,

Acting Regional Administrator, Region 4.

40 CFR part 52 is amended as follows:

PART 52—[AMENDED]

■ 1. The authority citation for part 52 continues to read as follows:

Authority: 42 U.S.C. 7401 *et seq.*

Subpart RR—Tennessee

■ 2. Amend § 52.2236 by designating the existing undesignated paragraph as paragraph (a), and adding paragraph (b) to read as follows:

§ 52.2236 Control strategy; lead.

(a) * * *

(b) *Determination of attaining data.* EPA has determined the Bristol, Tennessee, nonattainment area has attaining data for the 2008 lead (Pb) NAAQS. This clean data determination suspends the requirements for this area to submit an attainment demonstration, associated reasonably available control measures, a reasonable further progress plan, contingency measures, and other planning SIPs related to attainment of the standard for as long as this area continues to meet the 2008 Pb NAAQS.

[FR Doc. 2012–21246 Filed 8–28–12; 8:45 am]

BILLING CODE 6560–50–P

ENVIRONMENTAL PROTECTION AGENCY

40 CFR Parts 52 and 70

[EPA–R02–OAR–2012–0032, FRL–9714–5]

Approval and Promulgation of Implementation Plans and Operating Permits Program; Commonwealth of Puerto Rico; Administrative Changes

AGENCY: Environmental Protection Agency (EPA).

ACTION: Final rule.

SUMMARY: EPA is approving revisions to the Puerto Rico Regulations for the Control of Atmospheric Pollution, submitted to EPA by the Puerto Rico Environmental Quality Board on July 13, 2011. This action approves revisions to Rules 102, 111, 115, 116 and Appendix A. EPA is also approving a revision to Rule 609 as part of Puerto Rico's Title V Operating Program. Generally the revisions to the regulations involve administrative changes which improve the clarity of the rules contained in the Commonwealth's Implementation Plan and Operating Permits Program. They do not change the emission limitations nor add significant new requirements.

DATES: *Effective Date:* This rule will be effective on September 28, 2012.

ADDRESSES: EPA has established a docket for this action under the Federal Docket Management System (FDMS) which replaces the Regional Materials in EDOCKET (RME) docket system. The new FDMS is located at www.regulations.gov and the docket ID for this action is EPA–R02–OAR–2012–0032. All documents in the docket are listed in the FDMS index. Publicly available docket materials are available either electronically in FDMS or in hard copy at the Environmental Protection Agency, Region 2 Office, Air Programs Branch, 290 Broadway, 25th Floor, New York, New York 10007–1866. Copies of the documents relevant to this action are also available for public inspection during normal business hours, by appointment at the Air and Radiation Docket and Information Center, Environmental Protection Agency, Room 3334, 1301 Constitution Avenue NW., Washington, DC; and the Puerto Rico Environmental Quality Board, Cruz A. Matos Environmental Agencies

Building, 1375 Ponce de Leon Avenue, San Juan, Puerto Rico, 00926.

FOR FURTHER INFORMATION CONTACT: Kirk J. Wieber, Air Programs Branch, Environmental Protection Agency, 290 Broadway, 25th Floor, New York, New York 10007–1866, (212) 637–3381.

SUPPLEMENTARY INFORMATION: On July 13, 2011, the Puerto Rico Environmental Quality Board (PREQB) submitted to EPA a request for approval of revisions to the Puerto Rico Regulations for the Control of Atmospheric Pollution (PRRCAP). In the context of the Clean Air Act (CAA or Act), the Commonwealth of Puerto Rico is regarded as a state. Generally the changes to the PRRCAP involve administrative changes which improve the clarity of the rules. They do not change the emission limitations nor add significant new requirements.

On March 22, 2012 (77 FR 16676), EPA published a direct final rule that approved the revisions to the Puerto Rico Regulations for the Control of Atmospheric Pollution that were submitted to EPA by PREQB on July 13, 2011. EPA also published a proposed rule on March 22, 2012 (77 FR 16795). In the direct final rule, EPA stated that if we received adverse comments by April 23, 2012, the rule would be withdrawn and not take effect. EPA received an adverse comment and withdrew the direct final rule on May 29, 2012 (77 FR 31499). Based upon the proposed action published on March 22, 2012 (77 FR 16795), EPA is addressing the comment received in this final action. EPA is not instituting a second comment period on this action.

I. Revisions to the PRRCAP

Most of the revisions consist of clarification type changes such as public law or code cites or word changes. A summary of the various revisions is given below. EPA has determined that the revisions improve the effectiveness of the PRRCAP and will have no negative effect on maintaining the national ambient air quality standards.

A. General Provisions

Rule 102, ''Definitions'' and Appendix A, ''Hazardous Air Pollutants—Section 112(b) of the Clean Air Act''

PREQB revised two definitions in the revised Rule 102. They include the definition for ''Volatile Organic Compounds (VOC)'' and the definition for ''Applicable Rule and Regulation.'' PREQB revised the VOC definition to make it consistent with EPA's definition for VOC found in 40 CFR section 51.100(s). The revision to the ''Applicable Rule and Regulation'' definition includes a change to the citation of Puerto Rico's Environmental Public Policy Act. It was previously referenced in the definition as Law No. 9 of June 18, 1970. That Law was replaced by Law No. 416 of September 22, 2004.

PREQB also revised Appendix A to the PRRCAP. PREQB revised Appendix A to make it consistent with EPA's amended list of hazardous air pollutants in CAA section 112. Appendix A is referenced in the federally approved definition of Rule 102—''Hazardous Air Pollutant'' of the PRRCAP.

Rule 111, ''Applications, Hearings, Public Notice'' and Rule 115, ''Punishment''

PREQB revised Rules 111 and 115 in order to change the citation to Puerto Rico's Environmental Public Policy Act. It was previously referenced in Rules 111 and 115 as Law No. 9 of June 18, 1970. That Law was replaced by Law No. 416 of September 22, 2004.

Rule 116, ''Public Nuisance''

PREQB revised Rule 116 in order to revise the citation of the applicable Puerto Rico code. Rule 116 previously referenced Article 329 of the Penal Code of Puerto Rico and this reference was replaced with Article 277 of the Civil Prosecution Code of Puerto Rico.

None of the revisions to Rules 102, 111, 115, 116 or Appendix A of the PRRCAP involve changing the stringency of these provisions. EPA has thoroughly reviewed all of the revisions contained in these rules and has determined they meet EPA guidance and requirements; therefore, EPA is approving these revised rules. However, with regard to the revisions to the definition of VOC in Rule 102 and Appendix A, which are intended to achieve consistency with the CAA Section 112 list of chemicals, it is important to note that the CAA Section 112 list could potentially be revised by EPA and, for federal enforcement purposes, EPA will rely on the federally issued CAA Section 112 list.

B. Other Provisions

Rule 609, ''Permit Review''

PREQB also submitted a revision to Rule 609(g), ''Confidential information'' of the PRRCAP on July 13, 2011. The revisions to Rule 609 include the citation for Puerto Rico's Environmental Public Policy Act. It was previously referenced as Law No. 9 of June 18, 1970. That Law has subsequently been replaced by Law No. 416 of September 22, 2004. Rule 609 was never approved into the federally enforceable SIP for Puerto Rico since the provisions of Rule 609 are relevant to the Title V of the Act requirements. The federally approved SIP reflects only Title I of the Act requirements and not Title V. Therefore, EPA is not approving the revisions to Rule 609 into the federally enforceable Puerto Rico SIP. However, EPA is approving the revision to Rule 609 as part of the federally approved Puerto Rico Title V operating permits program. Rule 609 and the Puerto Rico Title V program were previously approved by EPA on February 26, 1996 (61 FR 7073).

II. What comments did EPA receive in response to its proposal?

On March 22, 2012 (77 FR 16676), EPA proposed to approve the revisions to the PRRCAP, submitted to EPA by the Puerto Rico Environmental Quality Board on July 13, 2011.

In response to EPA's March 22, 2012 proposed rulemaking action, EPA received one comment from Aida T. Fuentes Rivera, MPH.

Comment: The commentor states that there are other volatile organic compounds that have the potential to volatilize and produce adverse health effects, but are neither subject to the PRRCAP Rule 102 definition for VOCs, nor included in the section 112(b) Hazardous Air Pollutant (HAP) list. The commentor suggests that Puerto Rico harmonize all of its rules to clarify the applicability of all sources of VOCs, not just those sources applicable to Rule 102, National Emission Standards from Hazardous Air Pollutants (NESHAPs) or New Source Performance Standards (NSPS) or other federal requirements.

Response: EPA is approving a revision to the PRRCAP to include, among other things, the federal definition of ''VOC'' into Rule 102. This definition is consistent with the existing federal definition of VOC found in 40 CFR section 51.100(s). EPA is acting on a request by the PREQB to include such definition into its SIP. Incorporation of the definition into the Puerto Rico SIP does not impose any new requirements, i.e., emission rates, reporting or recordkeeping. It is PREQB's prerogative should they subsequently decide to revise their SIP approved regulations, i.e., Rules 102 and 206 (Rule 419 and Appendix B are not part of the federally approved Puerto Rico SIP), to include a discussion of those rules' applicability to sources not otherwise affected by NESHAPs, NSPS or other federal requirements. However, that is not necessary for EPA approval of the definition of VOC into the SIP, nor is that part of PREQB's request for which EPA is taking this action. EPA suggests the comment would be more

appropriately directed towards PREQB during the public hearing process associated with any subsequent and relevant revisions to the PRRCAP. Also, it is important to note that approved implementation plans or SIPs pursuant to section 110 of the CAA are required to include provisions necessary to implement, maintain and enforce the criteria pollutants or national ambient air quality standards and not directly HAPs or air toxics.

III. Conclusion

The revisions to Rules 102, 111, 115, 116 and Appendix A of the PRRCAP, effective February 18, 2011, are generally administrative changes, which improve the clarity of the rules. They do not change emission limitations nor add significant new requirements. EPA has thoroughly reviewed all of the revisions contained in these rules and has determined they meet EPA guidance and requirements. EPA is therefore approving revised PRRCAP Rules 102, 111, 115, 116 and Appendix A into the SIP. In addition, EPA is approving revised Rule 609 of the PRRCAP, effective February 18, 2011, as part of the federally approved Puerto Rico Title V operating permits program.

IV. Statutory and Executive Order Reviews

Under the Clean Air Act, the Administrator is required to approve a SIP submission that complies with the provisions of the Act and applicable Federal regulations. 42 U.S.C. 7410(k); 40 CFR 52.02(a). Thus, in reviewing SIP submissions, EPA's role is to approve state choices, provided that they meet the criteria of the Clean Air Act. Accordingly, this action merely approves state law as meeting Federal requirements and does not impose additional requirements beyond those imposed by state law. For that reason, this action:

- Is not a ''significant regulatory action'' subject to review by the Office of Management and Budget under Executive Order 12866 (58 FR 51735, October 4, 1993);
- Does not impose an information collection burden under the provisions of the Paperwork Reduction Act (44 U.S.C. 3501 *et seq.*);
- Is certified as not having a significant economic impact on a substantial number of small entities under the Regulatory Flexibility Act (5 U.S.C. 601 *et seq.*);
- Does not contain any unfunded mandate or significantly or uniquely affect small governments, as described in the Unfunded Mandates Reform Act of 1995 (Pub. L. 104–4);
- Does not have Federalism implications as specified in Executive Order 13132 (64 FR 43255, August 10, 1999);
- Is not an economically significant regulatory action based on health or safety risks subject to Executive Order 13045 (62 FR 19885, April 23, 1997);
- Is not a significant regulatory action subject to Executive Order 13211 (66 FR 28355, May 22, 2001);
- Is not subject to requirements of Section 12(d) of the National Technology Transfer and Advancement Act of 1995 (15 U.S.C. 272 note) because application of those requirements would be inconsistent with the Clean Air Act; and
- Does not provide EPA with the discretionary authority to address, as appropriate, disproportionate human health or environmental effects, using practicable and legally permissible methods, under Executive Order 12898 (59 FR 7629, February 16, 1994).

In addition, this rule does not have tribal implications as specified by Executive Order 13175 (65 FR 67249, November 9, 2000), because the SIP is not approved to apply in Indian country located in the state, and EPA notes that it will not impose substantial direct costs on tribal governments or preempt tribal law.

The Congressional Review Act, 5 U.S.C. 801 *et seq.,* as added by the Small Business Regulatory Enforcement Fairness Act of 1996, generally provides that before a rule may take effect, the agency promulgating the rule must submit a rule report, which includes a copy of the rule, to each House of the Congress and to the Comptroller General of the United States. EPA will submit a report containing this action and other required information to the U.S. Senate, the U.S. House of Representatives, and the Comptroller General of the United States prior to publication of the rule in the **Federal Register**. A major rule cannot take effect until 60 days after it is published in the **Federal Register**. This action is not a ''major rule'' as defined by 5 U.S.C. 804(2).

Under section 307(b)(1) of the Clean Air Act, petitions for judicial review of this action must be filed in the United States Court of Appeals for the appropriate circuit by October 29, 2012. Filing a petition for reconsideration by the Administrator of this final rule does not affect the finality of this action for the purposes of judicial review nor does it extend the time within which a petition for judicial review may be filed, and shall not postpone the effectiveness of such rule or action. This action may not be challenged later in proceedings to enforce its requirements. (See section 307(b)(2).)

List of Subjects

40 CFR Part 52

Environmental protection, Air pollution control, Incorporation by reference, Intergovernmental relations, Reporting and recordkeeping requirements, Volatile organic compounds.

40 CFR Part 70

Administrative practice and procedure, Air pollution control, Intergovernmental relations, Reporting and recordkeeping requirements.

Dated: July 31, 2012.

Judith A. Enck,

Regional Administrator, Region 2.

Part 52, chapter I, title 40 of the Code of Federal Regulations is amended as follows:

PART 52—[AMENDED]

■ 1. The authority citation for part 52 continues to read as follows:

Authority: 42 U.S.C. 7401–7671q.

Subpart BBB—Puerto Rico

■ 2. Section 52.2723 is amended by revising the ''EPA approval date'' entries for Rules 102, 111, 115, 116 and Appendix A.

§ 52.2723 EPA approved Puerto Rico regulations.

REGULATION FOR THE CONTROL OF ATMOSPHERIC POLLUTION

Puerto Rico regulation	Commonwealth effective date	EPA approval date	Comments
* *		* *	* * *
Rule 102—Definitions	2/18/11	8/29/12, [Insert FR page citation].	Puerto Rico's Environmental Public Policy Act Law No. 9 of June 18, 1970 was replaced with Law 416 of September 22, 2004.
* *		* *	* * *
Rule 111—Applications, Public Hearings and Public Notice.	2/18/11	8/29/12, [Insert FR page citation].	Puerto Rico's Environmental Public Policy Act Law No. 9 of June 18, 1970 was replaced with Law 416 of September 22, 2004.
* *		* *	* * *
Rule 115— Penalties	2/18/11	8/29/12, [Insert FR page citation].	Puerto Rico's Environmental Public Policy Act Law No. 9 of June 18, 1970 was replaced with Law 416 of September 22, 2004.
Rule 116— Public Nuisance	2/18/11	8/29/12, [Insert FR page citation].	Puerto Rico's Environmental Public Policy Act Law No. 9 of June 18, 1970 was replaced with Law 416 of September 22, 2004.
* *		* *	* * *
Appendix A, Hazardous Air Pollutants—Section 112(b) of the Clean Air Act.	2/18/11	8/29/12, [Insert FR page citation].	

[FR Doc. 2012–19961 Filed 8–28–12; 8:45 am]

BILLING CODE 6560–50–P

ENVIRONMENTAL PROTECTION AGENCY

40 CFR Part 180

[EPA–HQ–OPP–2011–0564; FRL–9360–2]

Thifensulfuron Methyl; Pesticide Tolerances

AGENCY: Environmental Protection Agency (EPA).

ACTION: Final rule.

SUMMARY: This regulation establishes tolerances for residues of thifensulfuron methyl in or on chicory roots and chicory tops. Interregional Research Project Number 4 (IR–4) requested these tolerances under the Federal Food, Drug, and Cosmetic Act (FFDCA).

DATES: This regulation is effective August 29, 2012. Objections and requests for hearings must be received on or before October 29, 2012, and must be filed in accordance with the instructions provided in 40 CFR part 178 (see also Unit I.C. of the **SUPPLEMENTARY INFORMATION**).

ADDRESSES: The docket for this action, identified by docket identification (ID) number EPA–HQ–OPP–2011–0564, is available at *http://www.regulations.gov* or at the OPP Docket in the Environmental Protection Agency Docket Center (EPA/DC), located in EPA West, Rm. 3334, 1301 Constitution Ave. NW., Washington, DC 20460–0001. The Public Reading Room is open from 8:30 a.m. to 4:30 p.m., Monday through Friday, excluding legal holidays. The telephone number for the Public Reading Room is (202) 566–1744, and the telephone number for the OPP Docket is (703) 305–5805. Please review the visitor instructions and additional information about the docket available at *http://www.epa.gov/dockets.*

FOR FURTHER INFORMATION CONTACT: Andrew Ertman, Registration Division (7505P), Office of Pesticide Programs, Environmental Protection Agency, 1200 Pennsylvania Ave. NW., Washington, DC 20460–0001; telephone number: (703) 308–9367; email address*: ertman.andrew@epa.gov.*

SUPPLEMENTARY INFORMATION:

I. General Information

A. Does this action apply to me?

You may be potentially affected by this action if you are an agricultural producer, food manufacturer, or pesticide manufacturer. Potentially affected entities may include, but are not limited to those engaged in the following activities:

- Crop production (NAICS code 111).
- Animal production (NAICS code 112).
- Food manufacturing (NAICS code 311).
- Pesticide manufacturing (NAICS code 32532).

B. How can I get electronic access to other related information?

You may access a frequently updated electronic version of EPA's tolerance regulations at 40 CFR part 180 through the Government Printing Office's e-CFR site at *http://ecfr.gpoaccess.gov/cgi/t/text/text-idx?&c=ecfr&tpl=/ecfrbrowse/Title40/40tab_02.tpl.*

C. How can I file an objection or hearing request?

Under FFDCA section 408(g), 21 U.S.C. 346a, any person may file an objection to any aspect of this regulation and may also request a hearing on those objections. You must file your objection or request a hearing on this regulation in accordance with the instructions provided in 40 CFR part 178. To ensure proper receipt by EPA, you must identify docket ID number EPA–HQ–OPP–2011–0564 in the subject line on the first page of your submission. All objections and requests for a hearing must be in writing, and must be received by the Hearing Clerk on or before October 29, 2012. Addresses for mail and hand delivery of objections and hearing requests are provided in 40 CFR 178.25(b).

In addition to filing an objection or hearing request with the Hearing Clerk as described in 40 CFR part 178, please submit a copy of the filing that does not contain any CBI for inclusion in the public docket. Information not marked confidential pursuant to 40 CFR part 2 may be disclosed publicly by EPA without prior notice. Submit a copy of

your non-CBI objection or hearing request, identified by docket ID number EPA–HQ–OPP–2011–0564, by one of the following methods:

• *Federal eRulemaking Portal: http://www.regulations.gov.* Follow the online instructions for submitting comments. Do not submit electronically any information you consider to be Confidential Business Information (CBI) or other information whose disclosure is restricted by statue.

• *Mail:* OPP Docket, Environmental Protection Agency Docket Center (EPA/DC), Mail Code: 28221T, 1200 Pennsylvania Ave. NW., Washington, DC 20460–0001.

• *Hand Delivery:* To make special arrangements for hand delivery or delivery of boxed information, please follow the instructions at *http://www.epa.gov/dockets/contacts.htm.*

II. Summary of Petitioned-for Tolerance

In the **Federal Register** of August 26, 2011 (76 FR 53372) (FRL–8884–9), EPA issued a notice pursuant to FFDCA section 408(d)(3), 21 U.S.C. 346a(d)(3), announcing the filing of a pesticide petition (PP 1E7885) by IR–4, 500 College Rd. East, Suite 201W, Princeton, NJ 08540. The petition requested that 40 CFR 180.439 be amended by establishing tolerances for residues of the herbicide thifensulfuron methyl, methyl-3-[[[[(4-methoxy-6-methyl-1,3,5-triazin-2-yl) amino]carbonyl]amino]sulfonyl]-2-thiophenecarboxylate, in or on chicory, roots at 0.01 parts per million (ppm) and chicory, tops at 0.01 ppm. That notice referenced a summary of the petition prepared by E.I. du Pont de Nemours and Company, the registrant, which is available in the docket, *http://www.regulations.gov.* There were no comments received in response to the notice of filing.

III. Aggregate Risk Assessment and Determination of Safety

Section 408(b)(2)(A)(i) of FFDCA allows EPA to establish a tolerance (the legal limit for a pesticide chemical residue in or on a food) only if EPA determines that the tolerance is ''safe.'' Section 408(b)(2)(A)(ii) of FFDCA defines ''safe'' to mean that ''there is a reasonable certainty that no harm will result from aggregate exposure to the pesticide chemical residue, including all anticipated dietary exposures and all other exposures for which there is reliable information.'' This includes exposure through drinking water and in residential settings, but does not include occupational exposure. Section 408(b)(2)(C) of FFDCA requires EPA to give special consideration to exposure of infants and children to the pesticide chemical residue in establishing a tolerance and to ''ensure that there is a reasonable certainty that no harm will result to infants and children from aggregate exposure to the pesticide chemical residue* * *.''

Consistent with FFDCA section 408(b)(2)(D), and the factors specified in FFDCA section 408(b)(2)(D), EPA has reviewed the available scientific data and other relevant information in support of this action. EPA has sufficient data to assess the hazards of and to make a determination on aggregate exposure for thifensulfuron methyl including exposure resulting from the tolerances established by this action. EPA's assessment of exposures and risks associated with thifensulfuron methyl follows.

A. Toxicological Profile

EPA has evaluated the available toxicity data and considered its validity, completeness, and reliability as well as the relationship of the results of the studies to human risk. EPA has also considered available information concerning the variability of the sensitivities of major identifiable subgroups of consumers, including infants and children.

Thifensulfuron methyl has mild to low acute toxicity when administered via the oral, inhalation and dermal routes of exposure. It has moderate to low toxicity with respect to eye and skin irritation and is not a dermal sensitizer. Most findings in the submitted studies related to decreases in body weights, body weight gains, or organ weights (a reflection of the lower body weights compared with control weights). There were increased liver weights in male dogs and increased thyroid/parathyroid weights in female dogs. There were no gross or histopathological changes reported in any of the studies.

In the rat developmental study, there were no maternal effects at the highest dose tested (HDT). The rabbit developmental study showed a decrease in maternal body weights at the HDT. There were no developmental effects at the HDT. In the 2-generation rat reproduction study there were no parental, reproductive or offspring effects. There was an increase in quantitative susceptibility in the rat developmental study, based on decreased mean fetal body weights, and an increase in the incidence of small renal papillae (only at the highest dose level).

Neurotoxicity was not observed in any of the submitted studies, including the recently submitted neurotoxicity studies which are currently under review. Based on the lack of neurotoxicity in the submitted studies, a developmental neurotoxicity study (DNT) is not required. A decrease in spleen weight was noted only in mid-dose males in the subchronic rat study, and was considered a potential sign of immunotoxicity. However, in the recently submitted immunotoxicity study in female rats, dosing with thifensulfuron methyl did not affect any immunotoxicity parameters up to the HDT of 529 milligrams//kilograms/day.

Thifensulfuron methyl is classified as ''not likely to be carcinogenic to humans,'' based on acceptable chronic/carcinogenicity studies in rats and mice at doses that are considered to be adequate, and not excessive for the determination of carcinogenic potential; there were no tumors observed in the studies, and the only adverse effects were decreased body weights and body weight gains. The available mutagenicity studies *in vivo* and *in vitro* show that thifensulfuron methyl is neither mutagenic nor clastogenic.

Specific information on the studies received and the nature of the adverse effects caused by thifensulfuron-methyl as well as the no-observed-adverse-effect-level (NOAEL) and the lowest-observed-adverse-effect-level (LOAEL) from the toxicity studies can be found at *http://www.regulations.gov* in the document titled ''Thifensulfuron Methyl. Human Health Risk Assessment for the Proposed Use of the Herbicide on Chicory'' on pages 30–33 in docket ID number EPA–HQ–OPP–2011–0564.

B. Toxicological Points of Departure/Levels of Concern

Once a pesticide's toxicological profile is determined, EPA identifies toxicological points of departure (POD) and levels of concern to use in evaluating the risk posed by human exposure to the pesticide. For hazards that have a threshold below which there is no appreciable risk, the toxicological POD is used as the basis for derivation of reference values for risk assessment. PODs are developed based on a careful analysis of the doses in each toxicological study to determine the dose at which no adverse effects are observed (the NOAEL) and the lowest dose at which adverse effects of concern are identified (the LOAEL). Uncertainty/safety factors are used in conjunction with the POD to calculate a safe exposure level—generally referred to as a population-adjusted dose (PAD) or a reference dose (RfD)—and a safe margin of exposure (MOE). For non-threshold risks, the Agency assumes that any amount of exposure will lead to some degree of risk. Thus, the Agency

estimates risk in terms of the probability of an occurrence of the adverse effect expected in a lifetime. For more information on the general principles EPA uses in risk characterization and a complete description of the risk assessment process, see *http://www.epa.gov/pesticides/factsheets/riskassess.htm.*

A summary of the toxicological endpoints for thifensulfuron methyl used for human risk assessment is shown in the following Table.

TABLE—SUMMARY OF TOXICOLOGICAL DOSES AND ENDPOINTS FOR THIFENSULFURON METHYL FOR USE IN HUMAN HEALTH RISK ASSESSMENT

Exposure/Scenario	Point of departure and uncertainty/safety factors	RfD, PAD, LOC for risk assessment	Study and toxicological effects
Acute dietary (Females 13–50 years of age).	NOAEL = 159 mg/kg/day UF_A = 10X UF_H = 10X FQPA SF = 1X	aRfD = 1.59 mg/kg/day aPAD = 1.59 mg/kg/day	Developmental oral toxicity in rats. LOAEL = 725 mg/kg/day, based on an increased incidence of small renal papillae.
Chronic dietary (All populations)	NOAEL= 4.3 mg/kg/day UF_A = 10X UF_H = 10X FQPA SF = 1X	cRfD = 0.043 mg/kg/day cPAD = 0.043 mg/kg/day	Carcinogenicity oral toxicity in mice. LOAEL = 128 mg/kg/day, based on decreased body weight and body weight gain.

FQPA SF = Food Quality Protection Act Safety Factor. LOAEL = lowest-observed-adverse-effect-level. LOC = level of concern. mg/kg/day = milligram/kilogram/day. MOE = margin of exposure. NOAEL = no-observed-adverse-effect-level. PAD = population adjusted dose (a = acute, c = chronic). RfD = reference dose. UF = uncertainty factor. UF_A = extrapolation from animal to human (interspecies). UF_H = potential variation in sensitivity among members of the human population (intraspecies).

C. Exposure Assessment

1. *Dietary exposure from food and feed uses.* In evaluating dietary exposure to thifensulfuron methyl, EPA considered exposure under the petitioned-for tolerances as well as all existing thifensulfuron methyl tolerances in 40 CFR 180.439. EPA assessed dietary exposures from thifensulfuron methyl in food as follows:

i. *Acute exposure.* Quantitative acute dietary exposure and risk assessments are performed for a food-use pesticide, if a toxicological study has indicated the possibility of an effect of concern occurring as a result of a 1-day or single exposure.

Such effects were identified for thifensulfuron methyl. In estimating acute dietary exposure, EPA used food consumption information from the U.S. Department of Agriculture (USDA) 1994–1996 and 1998 Nationwide Continuing Surveys of Food Intake by Individuals (CSFII). As to residue levels in food, EPA assumed 100 percent crop treated (PCT) and tolerance level residues for all commodities.

ii. *Chronic exposure.* In conducting the chronic dietary exposure assessment EPA used the food consumption data from the USDA 1994–1996 and 1998 CSFII. As to residue levels in food, EPA assumed 100 PCT and tolerance level residues for all commodities.

iii. *Cancer.* Based on the data summarized in Unit III.A., EPA has concluded that thifensulfuron methyl does not pose a cancer risk to humans. Therefore, a dietary exposure assessment for the purpose of assessing cancer risk is unnecessary.

iv. *Anticipated residue and PCT information.* EPA did not use anticipated residue or PCT information in the dietary assessment for thifensulfuron methyl. Tolerance level residues and 100 PCT were assumed for all food commodities.

2. *Dietary exposure from drinking water.* The Agency used screening level water exposure models in the dietary exposure analysis and risk assessment for thifensulfuron methyl in drinking water. These simulation models take into account data on the physical, chemical, and fate/transport characteristics of thifensulfuron methyl. Further information regarding EPA drinking water models used in pesticide exposure assessment can be found at *http://www.epa.gov/oppefed1/models/water/index.htm.*

Based on the First Index Reservoir Screening Tool (FIRST) and Screening Concentration in Ground Water (SCI–GROW) models, the estimated drinking water concentrations (EDWCs) of thifensulfuron methyl for acute exposures are estimated to be 4.429 parts per billion (ppb) for surface water and 0.0972 ppb for ground water. For chronic exposures for non-cancer assessments the EDWCs are estimated to be 1.5 ppb for surface water and 0.0972 ppb for ground water.

Modeled estimates of drinking water concentrations were directly entered into the dietary exposure model. For acute dietary risk assessment, the water concentration value of 4.429 ppb was used to assess the contribution to drinking water. For chronic dietary risk assessment, the water concentration of value 1.5 ppb was used to assess the contribution to drinking water.

3. *From non-dietary exposure.* The term ''residential exposure'' is used in this document to refer to non-occupational, non-dietary exposure (e.g., for lawn and garden pest control, indoor pest control, termiticides, and flea and tick control on pets).

Thifensulfuron methyl is not registered for any specific use patterns that would result in residential exposure.

4. *Cumulative effects from substances with a common mechanism of toxicity.* Section 408(b)(2)(D)(v) of FFDCA requires that, when considering whether to establish, modify, or revoke a tolerance, the Agency consider ''available information'' concerning the cumulative effects of a particular pesticide's residues and ''other substances that have a common mechanism of toxicity.''

EPA has not found thifensulfuron methyl to share a common mechanism of toxicity with any other substances, and thifensulfuron methyl does not appear to produce a toxic metabolite produced by other substances. For the purposes of this tolerance action, therefore, EPA has assumed that thifensulfuron methyl does not have a common mechanism of toxicity with other substances. For information regarding EPA's efforts to determine which chemicals have a common mechanism of toxicity and to evaluate the cumulative effects of such chemicals, see EPA's Web site at *http://www.epa.gov/pesticides/cumulative.*

D. Safety Factor for Infants and Children

1. *In general.* Section 408(b)(2)(C) of FFDCA provides that EPA shall apply an additional tenfold (10X) margin of safety for infants and children in the case of threshold effects to account for prenatal and postnatal toxicity and the completeness of the database on toxicity and exposure unless EPA determines based on reliable data that a different margin of safety will be safe for infants and children. This additional margin of safety is commonly referred to as the Food Quality Protection Act (FQPA) Safety Factor (SF). In applying this provision, EPA either retains the default value of 10X, or uses a different additional safety factor when reliable data available to EPA support the choice of a different factor.

2. *Prenatal and postnatal sensitivity.* The prenatal and postnatal toxicology database for thifensulfuron methyl includes rat and rabbit prenatal developmental toxicity studies and a 2-generation reproduction toxicity study in rats. There was evidence of increased quantitative susceptibility in the rat developmental toxicity study. At the HDT, decreased mean fetal weights, and an increase in incidence of small renal papillae were observed in the absence of maternal toxicity. There was no indication of pre- or post-natal susceptibility in the rabbit developmental or rat reproduction studies.

3. *Conclusion.* EPA has determined that reliable data show the safety of infants and children would be adequately protected if the FQPA SF were reduced to 1X. That decision is based on the following findings:

i. The toxicity database for thifensulfuron methyl is complete.

ii. There is no indication that thifensulfuron methyl is a neurotoxic chemical and there is no need for a developmental neurotoxicity study or additional UFs to account for neurotoxicity.

iii. Although there was evidence of increased quantitative susceptibility in the rat developmental study, the Agency's degree of concern for the increased susceptibility is low because it was only observed in the rat developmental toxicity study and not seen in the rabbit developmental or reproduction studies, and was observed at doses considerably higher than the doses chosen for risk assessment; in addition, there was a clear NOAEL for the fetal effects, and therefore EPA's risk assessment is protective of the potential susceptibility.

iv. There are no residual uncertainties identified in the exposure databases. The dietary food exposure assessments were performed based on 100 PCT and tolerance-level residues. EPA made conservative (protective) assumptions in the ground and surface water modeling used to assess exposure to thifensulfuron methyl in drinking water. These assessments will not underestimate the exposure and risks posed by thifensulfuron methyl.

E. Aggregate Risks and Determination of Safety

EPA determines whether acute and chronic dietary pesticide exposures are safe by comparing aggregate exposure estimates to the acute PAD (aPAD) and chronic PAD (cPAD). For linear cancer risks, EPA calculates the lifetime probability of acquiring cancer given the estimated aggregate exposure. Short-, intermediate-, and chronic-term risks are evaluated by comparing the estimated aggregate food, water, and residential exposure to the appropriate PODs to ensure that an adequate MOE exists.

1. *Acute risk.* Using the exposure assumptions discussed in this unit for acute exposure, the acute dietary exposure from food and water to thifensulfuron methyl will occupy less than 1% of the aPAD for females 13–49 years old, the only population subgroup of concern.

2. *Chronic risk.* Using the exposure assumptions described in this unit for chronic exposure, EPA has concluded that chronic exposure to thifensulfuron methyl from food and water will utilize 1.4% of the cPAD for children 3–5 years old, the population group receiving the greatest exposure. There are no residential uses for thifensulfuron methyl.

3. *Short- and intermediate-term risk.* Short- and intermediate-term aggregate exposure takes into account short- and intermediate-term residential exposure plus chronic exposure to food and water (considered to be a background exposure level).

A short- and intermediate-term adverse effect was identified; however, thifensulfuron methyl is not registered for any use patterns that would result in either short- and/or intermediate-term residential exposure. Short- and intermediate-term risk is assessed based on short- and intermediate-term residential exposure plus chronic dietary exposure. Because there is no short- and/or intermediate-term residential exposure and chronic dietary exposure has already been assessed under the appropriately protective cPAD (which is at least as protective as the POD used to assess short- and intermediate-term risk), no further assessment of short- and intermediate-term risk is necessary, and EPA relies on the chronic dietary risk assessment for evaluating short- and intermediate-term risk for thifensulfuron methyl.

4. *Aggregate cancer risk for U.S. population.* Based on the lack of evidence of carcinogenicity in two adequate rodent carcinogenicity studies, thifensulfuron methyl is not expected to pose a cancer risk to humans.

5. *Determination of safety.* Based on these risk assessments, EPA concludes that there is a reasonable certainty that no harm will result to the general population or to infants and children from aggregate exposure to thifensulfuron methyl residues.

IV. Other Considerations

A. Analytical Enforcement Methodology

Adequate enforcement methodology (liquid chromatograpy/mass spectrometry/mass spectrometry (LC/MS/MS)) is available to enforce the tolerance expression. The method may be requested from: Chief, Analytical Chemistry Branch, Environmental Science Center, 701 Mapes Rd., Ft. Meade, MD 20755–5350; telephone number: (410) 305–2905; email address: *residuemethods@epa.gov.*

B. International Residue Limits

In making its tolerance decisions, EPA seeks to harmonize U.S. tolerances with international standards whenever possible, consistent with U.S. food safety standards and agricultural practices. EPA considers the international maximum residue limits (MRLs) established by the Codex Alimentarius Commission (Codex), as required by FFDCA section 408(b)(4). The Codex Alimentarius is a joint United Nations Food and Agriculture Organization/World Health Organization food standards program, and it is recognized as an international food safety standards-setting organization in trade agreements to which the United States is a party. EPA may establish a tolerance that is different from a Codex MRL; however, FFDCA section 408(b)(4) requires that EPA explain the reasons for departing from the Codex level. The Codex has not established a MRL for thifensulfuron methyl in or on chicory roots and/or tops.

V. Conclusion

Therefore, tolerances are established for residues of thifensulfuron methyl, methyl-3-[[[[(4-methoxy-6-methyl-1,3,5-triazin-2-ylamino]carbonyl]amino]

sulfonyl]-2-thiophenecarboxylate, in or on chicory roots at 0.01 ppm and chicory tops at 0.01 ppm.)

VI. Statutory and Executive Order Reviews

This final rule establishes tolerances under FFDCA section 408(d) in response to a petition submitted to the Agency. The Office of Management and Budget (OMB) has exempted these types of actions from review under Executive Order 12866, entitled ''Regulatory Planning and Review'' (58 FR 51735, October 4, 1993). Because this final rule has been exempted from review under Executive Order 12866, this final rule is not subject to Executive Order 13211, entitled ''Actions Concerning Regulations That Significantly Affect Energy Supply, Distribution, or Use'' (66 FR 28355, May 22, 2001) or Executive Order 13045, entitled ''Protection of Children from Environmental Health Risks and Safety Risks'' (62 FR 19885, April 23, 1997). This final rule does not contain any information collections subject to OMB approval under the Paperwork Reduction Act (PRA), 44 U.S.C. 3501 *et seq.,* nor does it require any special considerations under Executive Order 12898, entitled ''Federal Actions to Address Environmental Justice in Minority Populations and Low-Income Populations'' (59 FR 7629, February 16, 1994).

Since tolerances and exemptions that are established on the basis of a petition under FFDCA section 408(d), such as the tolerance in this final rule, do not require the issuance of a proposed rule, the requirements of the Regulatory Flexibility Act (RFA) (5 U.S.C. 601 *et seq.*) do not apply.

This final rule directly regulates growers, food processors, food handlers, and food retailers, not States or tribes, nor does this action alter the relationships or distribution of power and responsibilities established by Congress in the preemption provisions of FFDCA section 408(n)(4). As such, the Agency has determined that this action will not have a substantial direct effect on States or tribal governments, on the relationship between the national government and the States or tribal governments, or on the distribution of power and responsibilities among the various levels of government or between the Federal Government and Indian tribes. Thus, the Agency has determined that Executive Order 13132, entitled ''Federalism'' (64 FR 43255, August 10, 1999) and Executive Order 13175, entitled ''Consultation and Coordination with Indian Tribal Governments'' (65 FR 67249, November 9, 2000) do not apply to this final rule. In addition, this final rule does not impose any enforceable duty or contain any unfunded mandate as described under Title II of the Unfunded Mandates Reform Act of 1995 (UMRA) (Pub. L. 104–4).

This action does not involve any technical standards that would require Agency consideration of voluntary consensus standards pursuant to section 12(d) of the National Technology Transfer and Advancement Act of 1995 (NTTAA), Public Law 104–113, section 12(d) (15 U.S.C. 272 note).

VII. Congressional Review Act

The Congressional Review Act, 5 U.S.C. 801 *et seq.,* generally provides that before a rule may take effect, the agency promulgating the rule must submit a rule report to each House of the Congress and to the Comptroller General of the United States. EPA will submit a report containing this rule and other required information to the U.S. Senate, the U.S. House of Representatives, and the Comptroller General of the United States prior to publication of this final rule in the **Federal Register**. This final rule is not a ''major rule'' as defined by 5 U.S.C. 804(2).

List of Subjects in 40 CFR Part 180

Environmental protection, Administrative practice and procedure, Agricultural commodities, Pesticides and pests, Reporting and recordkeeping requirements.

Dated: August 17, 2012.

Daniel J. Rosenblatt,

Acting Director, Registration Division, Office of Pesticide Programs.

Therefore, 40 CFR chapter I is amended as follows:

PART 180—[AMENDED]

■ 1. The authority citation for part 180 continues to read as follows:

Authority: 21 U.S.C. 321(q), 346a and 371.

■ 2. Section 180.439 is amended by alphabetically adding the following commodities to the table in paragraph (a) to read as follows:

§ 180.439 Thifensulfuron methyl; tolerances for residues.

(a) * * *

Commodity	Parts per million
* * * * *	
Chicory, roots	0.01
Chicory, tops	0.01
* * * * *	

* * * * *

[FR Doc. 2012–21356 Filed 8–28–12; 8:45 am]

BILLING CODE 6560–50–P

ENVIRONMENTAL PROTECTION AGENCY

40 CFR Part 180

[EPA–HQ–OPP–2011–0521; FRL–9360–5]

Pendimethalin; Pesticide Tolerances

AGENCY: Environmental Protection Agency (EPA).

ACTION: Final rule.

SUMMARY: This regulation establishes tolerances for residues of pendimethalin in or on multiple commodities which are identified and discussed later in this document. Interregional Research Project No. 4 (IR–4) requested these tolerances under the Federal Food, Drug, and Cosmetic Act (FFDCA).

DATES: This regulation is effective August 29, 2012. Objections and requests for hearings must be received on or before October 29, 2012, and must be filed in accordance with the instructions provided in 40 CFR part 178 (see also Unit I.C. of the **SUPPLEMENTARY INFORMATION**).

ADDRESSES: The docket for this action, identified by docket identification (ID) number EPA–HQ–OPP–2011–0521, is available at *http://www.regulations.gov* or at the Office of Pesticide Programs Regulatory Public Docket (OPP Docket) in the Environmental Protection Agency Docket Center (EPA/DC), EPA West Bldg., Rm. 3334, 1301 Constitution Ave. NW., Washington, DC 20460–0001. The Public Reading Room is open from 8:30 a.m. to 4:30 p.m., Monday through Friday, excluding legal holidays. The telephone number for the Public Reading Room is (202) 566–1744, and the telephone number for the OPP Docket is (703) 305–5805. Please review the visitor instructions and additional information about the docket available at *http://www.epa.gov/dockets.*

FOR FURTHER INFORMATION CONTACT: Andrew Ertman, Registration Division, Office of Pesticide Programs, Environmental Protection Agency, 1200 Pennsylvania Ave. NW., Washington, DC 20460–0001; telephone number: (703) 308–9367; email address: *ertman.andrew@epa.gov.*

SUPPLEMENTARY INFORMATION:

I. General Information

A. Does this action apply to me?

You may be potentially affected by this action if you are an agricultural producer, food manufacturer, or

pesticide manufacturer. The following list of North American Industrial Classification System (NAICS) codes is not intended to be exhaustive, but rather provides a guide to help readers determine whether this document applies to them. Potentially affected entities may include:

- Crop production (NAICS code 111).
- Animal production (NAICS code 112).
- Food manufacturing (NAICS code 311).
- Pesticide manufacturing (NAICS code 32532).

B. How can I get electronic access to other related information?

You may access a frequently updated electronic version of EPA's tolerance regulations at 40 CFR part 180 through the Government Printing Office's e-CFR site at *http://ecfr.gpoaccess.gov/cgi/t/text/text-idx?&c=ecfr&tpl=/ecfrbrowse/Title40/40tab_02.tpl.*

C. How can I file an objection or hearing request?

Under FFDCA section 408(g), 21 U.S.C. 346a, any person may file an objection to any aspect of this regulation and may also request a hearing on those objections. You must file your objection or request a hearing on this regulation in accordance with the instructions provided in 40 CFR part 178. To ensure proper receipt by EPA, you must identify docket ID number EPA–HQ–OPP–2011–0521 in the subject line on the first page of your submission. All objections and requests for a hearing must be in writing, and must be received by the Hearing Clerk on or before October 29, 2012. Addresses for mail and hand delivery of objections and hearing requests are provided in 40 CFR 178.25(b).

In addition to filing an objection or hearing request with the Hearing Clerk as described in 40 CFR part 178, please submit a copy of the filing (excluding any CBI) for inclusion in the public docket. Information not marked confidential pursuant to 40 CFR part 2 may be disclosed publicly by EPA without prior notice. Submit the non-CBI copy of your objection or hearing request, identified by docket ID number EPA–HQ–OPP–2011–0521, by one of the following methods:

- *Federal eRulemaking Portal: http://www.regulations.gov.* Follow the online instructions for submitting comments. Do not submit electronically any information you consider to be Confidential Business Information (CBI) or other information whose disclosure is restricted by statute.
- *Mail:* OPP Docket, Environmental Protection Agency Docket Center (EPA/DC), (28221T), 1200 Pennsylvania Ave. NW., Washington, DC 20460–0001.
- *Hand Delivery:* To make special arrangements for hand delivery or delivery of boxed information, please follow the instructions at *http://www.epa.gov/dockets/contacts.htm.*

Additional instructions on commenting or visiting the docket, along with more information about dockets generally, is available at *http://www.epa.gov/dockets.*

II. Summary of Petitioned-For Tolerance

In the **Federal Register** of July 20, 2011 (76 FR 43231) (FRL–8880–1), EPA issued a notice pursuant to FFDCA section 408(d)(3), 21 U.S.C. 346a(d)(3), announcing the filing of a pesticide petition (PP 1E7878) by IR–4, 500 College Road East, Suite 201W, Princeton, NJ 08540. The petition requested that 40 CFR 180.361 be amended by establishing tolerances for residues of the herbicide pendimethalin, *N*-(1-ethylpropyl)-3,4-dimethyl-2,6dinitrobenzenamine, and its 3, 5-dinitrobenzyl alcohol metabolite (CL 202347), in or on lettuce, leaf at 3.0 parts per million (ppm); *Brassica,* leafy greens, subgroup 5B at 0.2 ppm; turnip greens at 0.2 ppm; melons subgroup 9A at 0.1 ppm; vegetable, soybean, succulent at 0.1 ppm; and small fruit vine climbing subgroup 13–07E, except grape at 0.1 ppm. That notice referenced a summary of the petition prepared by BASF, the registrant, which is available in the docket, *http://www.regulations.gov.* There were no comments received in response to the notice of filing.

Based upon review of the data supporting the petition, EPA has modified the level for which the tolerance is being established for leaf lettuce. The reason for this change is explained in Unit IV.C.

III. Aggregate Risk Assessment and Determination of Safety

Section 408(b)(2)(A)(i) of FFDCA allows EPA to establish a tolerance (the legal limit for a pesticide chemical residue in or on a food) only if EPA determines that the tolerance is ''safe.'' Section 408(b)(2)(A)(ii) of FFDCA defines ''safe'' to mean that ''there is a reasonable certainty that no harm will result from aggregate exposure to the pesticide chemical residue, including all anticipated dietary exposures and all other exposures for which there is reliable information.'' This includes exposure through drinking water and in residential settings, but does not include occupational exposure. Section 408(b)(2)(C) of FFDCA requires EPA to give special consideration to exposure of infants and children to the pesticide chemical residue in establishing a tolerance and to ''ensure that there is a reasonable certainty that no harm will result to infants and children from aggregate exposure to the pesticide chemical residue * * *.''

Consistent with FFDCA section 408(b)(2)(D), and the factors specified in FFDCA section 408(b)(2)(D), EPA has reviewed the available scientific data and other relevant information in support of this action. EPA has sufficient data to assess the hazards of and to make a determination on aggregate exposure for pendimethalin including exposure resulting from the tolerances established by this action. EPA's assessment of exposures and risks associated with pendimethalin follows.

A. Toxicological Profile

EPA has evaluated the available toxicity data and considered its validity, completeness, and reliability as well as the relationship of the results of the studies to human risk. EPA has also considered available information concerning the variability of the sensitivities of major identifiable subgroups of consumers, including infants and children.

Pendimethalin has low acute oral, dermal, and inhalation toxicity, and is not a dermal sensitizer. The thyroid is a target organ for pendimethalin. Thyroid toxicity in chronic and subchronic rat and mouse studies was manifested as alterations in thyroid hormones, increased thyroid weight, and microscopic thyroid lesions. Due to these effects, the Agency required that a developmental thyroid assay be conducted to evaluate the impact of pendimethalin on thyroid hormones, structure, and/or thyroid hormone homeostasis during development. A developmental thyroid study was submitted and demonstrated that there is no potential thyroid toxicity following pre- and/or post-natal exposure to pendimethalin. The available prenatal and postnatal developmental toxicity data provided no indication of qualitative or quantitative susceptibility to the young. The overall weight of evidence suggests that this chemical does not directly target the immune system. There is no evidence of neurotoxicity for pendimethalin exposure.

The points of departure (PODs) used for the chronic and short-term risk assessments were based on a 92-day thyroid function study in rats, a 56-day thyroid study in rats, and a 14-day intra

thyroid metabolism study in rats. Due to several important quantitative dynamic differences between rats and humans with respect to thyroid function, the interspecies uncertainty factor ((UF); used to account for animal to human differences in toxicokinetics and toxicodynamics) was reduced to 3X for the chronic and short-term risk assessments. A 10X interspecies UF was used in the acute risk assessment because the POD was based on an acute neurotoxicity study, not a thyroid study. The use of an oral POD, assuming 100 percent inhalation absorption is considered protective for assessing short-term inhalation exposure since pendimethalin has a low vapor pressure (1.24×10^{-8} Millimeter (mm) mercury (Hg) at 20°C) and is not likely to volatilize substantially. It also has a relatively low solubility in water (0.275 ppm at 25 °C). Further, the EPA has determined a subchronic inhalation study is not needed at this time.

Pendimethalin is considered a possible human carcinogen based on a statistically significant increased trend and pair-wise comparison between the high dose group and controls for thyroid folliculate cell adenomas in male and female rats. A threshold approach is being used to evaluate cancer risk because mode of action studies are available demonstrating that the thyroid tumors are due to a thyroid-pituitary imbalance (a threshold effect), and also because pendimethalin was shown to be non-mutagenic in mammalian somatic cells and germ cells.

Specific information on the studies received and the nature of the adverse effects caused by pendimethalin as well as the no-observed-adverse-effect-level (NOAEL) and the lowest-observed-adverse-effect-level (LOAEL) from the toxicity studies can be found at *http://www.regulations.gov,* on pp. 51–54 in the document titled ''*Revised Pendimethalin: Human Health Risk Assessment for Proposed Use on Leaf lettuce; Leafy brassica greens; Melons; Edamame; Kiwi and other small fruit vines*'' in docket ID number EPA–HQ–OPP–2011–0521.

B. Toxicological Points of Departure/Levels of Concern

Once a pesticide's toxicological profile is determined, EPA identifies toxicological points of departure (POD) and levels of concern to use in evaluating the risk posed by human exposure to the pesticide. For hazards that have a threshold below which there is no appreciable risk, the toxicological POD is used as the basis for derivation of reference values for risk assessment. PODs are developed based on a careful analysis of the doses in each toxicological study to determine the dose at which no adverse effects are observed (the NOAEL) and the lowest dose at which adverse effects of concern are identified (the LOAEL). Uncertainty/safety factors are used in conjunction with the POD to calculate a safe exposure level—generally referred to as a population-adjusted dose (PAD) or a reference dose (RfD)—and a safe margin of exposure (MOE). For non-threshold risks, the Agency assumes that any amount of exposure will lead to some degree of risk. Thus, the Agency estimates risk in terms of the probability of an occurrence of the adverse effect expected in a lifetime. For more information on the general principles EPA uses in risk characterization and a complete description of the risk assessment process, see *http://www.epa.gov/pesticides/factsheets/riskassess.htm.*

A summary of the toxicological endpoints for pendimethalin used for human risk assessment is shown in the Table of this unit.

TABLE—SUMMARY OF TOXICOLOGICAL DOSES AND ENDPOINTS FOR PENDIMETHALIN FOR USE IN HUMAN HEALTH RISK ASSESSMENT

Exposure/scenario	Point of departure and uncertainty/safety factors	RfD, PAD, LOC for risk assessment	Study and toxicological effects
Acute dietary (General population including infants and children).	NOAEL = 100 mg/kg/day UF_A = 10X UF_H = 10X FQPA SF = 1X	Acute RfD = 1 mg/kg/day aPAD = 1 mg/kg/day	Acute neurotoxicity study LOAEL = 300 mg/kg, based on reduced motor activity for males and females on Day 0
Chronic dietary (All populations)	NOAEL= 10 mg/kg/day UF_A = 3X UF_H = 10X FQPA SF = 1X	Chronic RfD = 0.3 mg/kg/day cPAD = 0.3 mg/kg/day	92-Day thyroid function study in rats; 56-day thyroid study in rats; 14-day intra thyroid metabolism study in rats LOAEL = 31 mg/kg/day based on hormonal and histopathological changes in the thyroid
Incidental oral short-term (1 to 30 days)	NOAEL= 10 mg/kg/day UF_A = 3X UF_H = 10X FQPA SF = 1X	LOC for MOE = 30	92-Day thyroid function study in rats; 56-day thyroid study in rats; 14-day intra thyroid metabolism study in rats LOAEL = 31 mg/kg/day based on hormonal and histopathological changes in the thyroid
Dermal short-term (1 to 30 days)	Oral study NOAEL = 10 mg/kg/day (dermal absorption rate = 3% UF_A = 3X UF_H = 10X FQPA SF = 1X	LOC for MOE = 30	92-Day thyroid function study in rats; 56-day thyroid study in rats; 14-day intra thyroid metabolism study in rats LOAEL = 31 mg/kg/day based on hormonal and histopathological changes in the thyroid

TABLE—SUMMARY OF TOXICOLOGICAL DOSES AND ENDPOINTS FOR PENDIMETHALIN FOR USE IN HUMAN HEALTH RISK ASSESSMENT—Continued

Exposure/scenario	Point of departure and uncertainty/ safety factors	RfD, PAD, LOC for risk assessment	Study and toxicological effects
Inhalation short-term (1 to 30 days)	Oral study NOAEL= 10 mg/kg/day (inhalation absorption rate = 100%) UF_A = 3X UF_H = 10X FQPA SF = 1X	LOC for MOE = 30	92-Day thyroid function study in rats; 56-day thyroid study in rats; 14-day intra thyroid metabolism study in rats LOAEL = 31 mg/kg/day based on hormonal and histopathological changes in the thyroid
Cancer (Oral, dermal, inhalation)	Pendimethalin has been classified as a possible human carcinogen based on a statistically significant increased trend and pair-wise comparison between the high dose group and controls for thyroid follicular cell adenomas in male and female rats. A non-quantitative approach (i.e., non-linear, RfD approach) was used since mode of action studies are available		

FQPA SF = Food Quality Protection Act Safety Factor. LOAEL = lowest-observed-adverse-effect-level. LOC = level of concern. mg/kg/day = milligram/kilogram/day. MOE = margin of exposure. NOAEL = no-observed-adverse-effect-level. PAD = population adjusted dose (a = acute, c = chronic). RfD = reference dose. UF = uncertainty factor. UF_A = extrapolation from animal to human (interspecies). UF_H = potential variation in sensitivity among members of the human population (intraspecies).

C. Exposure Assessment

1. *Dietary exposure from food and feed uses.* In evaluating dietary exposure to pendimethalin, EPA considered exposure under the petitioned-for tolerances as well as all existing pendimethalin tolerances in 40 CFR 180.361. EPA assessed dietary exposures from pendimethalin in food as follows:

i. *Acute exposure.* Quantitative acute dietary exposure and risk assessments are performed for a food-use pesticide, if a toxicological study has indicated the possibility of an effect of concern occurring as a result of a 1-day or single exposure.

Such effects were identified for pendimethalin. In estimating acute dietary exposure, EPA used food consumption information from the United States Department of Agriculture (USDA) 1994–1996 and 1998 Nationwide Continuing Surveys of Food Intake by Individuals (CSFII). As to residue levels in food, EPA assumed 100 percent crop treated (PCT) and tolerance-level residues for all current and proposed crops.

ii. *Chronic exposure.* In conducting the chronic dietary exposure assessment EPA used the food consumption data from the USDA 1994–1996 and 1998 CSFII. As to residue levels in food, EPA assumed 100 PCT and tolerance-level residues for all current and proposed crops.

iii. *Cancer.* EPA determines whether quantitative cancer exposure and risk assessments are appropriate for a food-use pesticide based on the weight of the evidence from cancer studies and other relevant data. Cancer risk is quantified using a linear or nonlinear approach. If sufficient information on the carcinogenic mode of action is available, a threshold or nonlinear approach is used and a cancer RfD is calculated based on an earlier noncancer key event. If carcinogenic mode of action data are not available, or if the mode of action data determines a mutagenic mode of action, a default linear cancer slope factor approach is utilized. Based on the data summarized in Unit III.A., EPA has concluded that a nonlinear RfD approach is appropriate for assessing cancer risk to pendimethalin. Cancer risk was assessed using the same exposure estimates as discussed in Unit III.C.1.ii., *chronic exposure.*

iv. *Anticipated residue and PCT information.* EPA did not use anticipated residue or PCT information in the dietary assessment for pendimethalin. Tolerance level residues and 100 PCT were assumed for all food commodities.

2. *Dietary exposure from drinking water.* The Agency used screening level water exposure models in the dietary exposure analysis and risk assessment for pendimethalin in drinking water. These simulation models take into account data on the physical, chemical, and fate/transport characteristics of pendimethalin. Further information regarding EPA drinking water models used in pesticide exposure assessment can be found at *http://www.epa.gov/oppefed1/models/water/index.htm.*

Based on the Pesticide Root Zone Model/Exposure Analysis Modeling System (PRZM/EXAMS) and Screening Concentration in Ground Water (SCI–GROW) models the estimated drinking water concentrations (EDWCs) of pendimethalin for acute exposures are estimated to be 80.5 parts per billion (ppb) for surface water and 0.036 ppb for ground water; and for chronic exposures are estimated to be 6.2 ppb for surface water and 0.036 ppb for ground water.

Modeled estimates of drinking water concentrations were directly entered into the dietary exposure model. For acute dietary risk assessment, the water concentration value of 80.5 ppb was used to assess the contribution to drinking water. For chronic dietary risk assessment, the water concentration of value 6.2 ppb was used to assess the contribution to drinking water.

3. *From non-dietary exposure.* The term ''residential exposure'' is used in this document to refer to non-occupational, non-dietary exposure (e.g., for lawn and garden pest control, indoor pest control, termiticides, and flea and tick control on pets).

Pendimethalin is currently registered for the following uses that could result in residential exposures: Turf and ornamentals. EPA assessed residential exposure using the following assumptions: For handlers, it is assumed that most residential use will result in short-term (1 to 30 days) dermal and inhalation exposures. Residential handlers are assumed to be wearing short-sleeved shirts, short pants, shoes and socks during application of pendimethalin.

Residential post-application exposure is assumed to be short-term (1–30 days) in duration, resulting from the following: physical activities on turf: adults (dermal) and children 1–2 years old (dermal and incidental oral); mowing: adults (dermal) and children 11 < 16 years old (dermal); and golfing: adults (dermal), children 11 < 16 years

old (dermal), and children 6 < 11 years old (dermal).

EPA did not combine exposure resulting from adult handler and post-application exposure resulting from treated lawns and/or golfing because of the conservative assumptions and inputs within each estimated exposure scenario. The Agency believes that combining exposures resulting from handler and post-application activities would result in an overestimate of adult exposure. EPA selected the most conservative adult residential scenario (adults 50+ years old; dermal post-application exposure) as the contributing source of residential exposure to be combined with the dietary exposure for the aggregate assessment.

The children's oral exposure is based on post-application hand-to-mouth exposures. To include exposure from object-to-mouth and soil ingestion in addition to hand-to-mouth could result in a very conservative estimation of exposure, as it would overestimate the potential for oral exposure. However, there is potential for co-occurrence of the dermal and oral exposure based on the use pattern and combining them is appropriate because risk estimated from the dermal and oral routes of exposure are based on the same toxicological study. As a result, the children's aggregate assessment combines post-application dermal and oral exposure along with dietary exposure from food and water.

Further information regarding EPA standard assumptions and generic inputs for residential exposures may be found at *http://www.epa.gov/pesticides/trac/science/trac6a05.pdf.*

4. *Cumulative effects from substances with a common mechanism of toxicity.* Section 408(b)(2)(D)(v) of FFDCA requires that, when considering whether to establish, modify, or revoke a tolerance, the Agency consider ''available information'' concerning the cumulative effects of a particular pesticide's residues and ''other substances that have a common mechanism of toxicity.''

EPA has not found pendimethalin to share a common mechanism of toxicity with any other substances, and pendimethalin does not appear to produce a toxic metabolite produced by other substances. For the purposes of this tolerance action, therefore, EPA has assumed that pendimethalin does not have a common mechanism of toxicity with other substances. For information regarding EPA's efforts to determine which chemicals have a common mechanism of toxicity and to evaluate the cumulative effects of such chemicals, see EPA's Web site at *http://www.epa.gov/pesticides/cumulative.*

D. Safety Factor for Infants and Children

1. *In general.* Section 408(b)(2)(C) of FFDCA provides that EPA shall apply an additional tenfold (10X) margin of safety for infants and children in the case of threshold effects to account for prenatal and postnatal toxicity and the completeness of the database on toxicity and exposure unless EPA determines based on reliable data that a different margin of safety will be safe for infants and children. This additional margin of safety is commonly referred to as the FQPA SF. In applying this provision, EPA either retains the default value of 10X, or uses a different additional safety factor when reliable data available to EPA support the choice of a different factor.

2. *Prenatal and postnatal sensitivity.* There was no indication of pre- and/or post-natal qualitative or quantitative increased susceptibility in the developmental studies in rats and rabbits or the 2-generation reproduction studies in rats. In addition, a developmental thyroid toxicity study demonstrated that there is no potential thyroid toxicity following pre- and/or post-natal exposure to pendimethalin.

3. *Conclusion.* EPA has determined that reliable data show the safety of infants and children would be adequately protected if the FQPA SF were reduced to 1X. That decision is based on the following findings:

i. The toxicity database for pendimethalin is complete.

ii. There is no indication that pendimethalin is a neurotoxic chemical and there is no need for a developmental neurotoxicity study or additional UFs to account for neurotoxicity.

iii. There is no evidence that pendimethalin results in increased susceptibility in *in utero* rats or rabbits in the prenatal developmental studies or in young rats in the 2-generation reproduction study. In addition, a developmental thyroid toxicity study demonstrated that there is no potential thyroid toxicity following pre- and/or post-natal exposure to pendimethalin.

iv. There are no residual uncertainties identified in the exposure databases. The dietary food exposure assessments were performed based on 100 PCT and tolerance-level residues. EPA made conservative (protective) assumptions in the ground and surface water modeling used to assess exposure to pendimethalin in drinking water. EPA used similarly conservative assumptions to assess postapplication exposure of children as well as incidental oral exposure of toddlers. These assessments will not underestimate the exposure and risks posed by pendimethalin.

E. Aggregate Risks and Determination of Safety

EPA determines whether acute and chronic dietary pesticide exposures are safe by comparing aggregate exposure estimates to the aPAD and cPAD. For linear cancer risks, EPA calculates the lifetime probability of acquiring cancer given the estimated aggregate exposure. Short-, intermediate-, and chronic-term risks are evaluated by comparing the estimated aggregate food, water, and residential exposure to the appropriate PODs to ensure that an adequate MOE exists.

1. *Acute risk.* Using the exposure assumptions discussed in this unit for acute exposure, the acute dietary exposure from food and water to pendimethalin will occupy 2.0% of the aPAD for all infants less than 1 year old, the population group receiving the greatest exposure.

2. *Chronic risk.* Using the exposure assumptions described in this unit for chronic exposure, EPA has concluded that chronic exposure to pendimethalin from food and water will utilize 1.6% of the cPAD for children 1–2 years old, the population group receiving the greatest exposure. Based on the explanation in Unit III.C.3., regarding residential use patterns, chronic residential exposure to residues of pendimethalin is not expected.

3. *Short-term risk.* Short-term aggregate exposure takes into account short-term residential exposure plus chronic exposure to food and water (considered to be a background exposure level).

Pendimethalin is currently registered for uses that could result in short-term residential exposure, and the Agency has determined that it is appropriate to aggregate chronic exposure through food and water with short-term residential exposures to pendimethalin.

Using the exposure assumptions described in this unit for short-term exposures, EPA has concluded the combined short-term food, water, and residential exposures result in aggregate MOEs of 125 for adults and 93 for children 1–2 years old, the two population subgroups receiving the greatest combined dietary and non-dietary exposure. Because EPA's level of concern for pendimethalin is a MOE of 30 or below, these MOEs are not of concern.

4. *Intermediate-term risk.* Intermediate-term aggregate exposure

takes into account intermediate-term residential exposure plus chronic exposure to food and water (considered to be a background exposure level).

An intermediate-term adverse effect was identified; however, pendimethalin is not registered for any use patterns that would result in intermediate-term residential exposure. Intermediate-term risk is assessed based on intermediate-term residential exposure plus chronic dietary exposure. Because there is no intermediate-term residential exposure and chronic dietary exposure has already been assessed under the appropriately protective cPAD (which is at least as protective as the POD used to assess intermediate-term risk), no further assessment of intermediate-term risk is necessary, and EPA relies on the chronic dietary risk assessment for evaluating intermediate-term risk for pendimethalin.

5. *Aggregate cancer risk for U.S. population.* Pendimethalin is considered a ''possible human carcinogen'' based on a statistically significant increased trend and pair-wise comparison between the high dose group and controls for thyroid follicular cell adenomas in male and female rats. A non-quantitative approach (i.e., non-linear, RfD approach) was used since mode of action studies are available to demonstrate that the thyroid tumors are due to a thyroid-pituitary imbalance, and also since pendimethalin was shown to be non-mutagenic in mammalian somatic cells and germ cells. The chronic dietary risk assessment is considered to be protective of any cancer effects.

6. *Determination of safety.* Based on these risk assessments, EPA concludes that there is a reasonable certainty that no harm will result to the general population or to infants and children from aggregate exposure to pendimethalin residues.

IV. Other Considerations

A. Analytical Enforcement Methodology

PAM Volume II lists four Gas Chromatography/Electron Capture Detector (GC/ECD), methods for the determination of pendimethalin and its 3,5-dinitrobenzyl alcohol metabolite in plant commodities. Methods I and III determine residues of the parent, whereas Methods II and IV determine residues of the 3,5-dinitrobenzyl alcohol metabolite.

B. International Residue Limits

In making its tolerance decisions, EPA seeks to harmonize U.S. tolerances with international standards whenever possible, consistent with U.S. food safety standards and agricultural practices. EPA considers the international maximum residue limits (MRLs) established by the Codex Alimentarius Commission (Codex), as required by FFDCA section 408(b)(4). The Codex Alimentarius is a joint United Nations Food and Agriculture Organization/World Health Organization food standards program, and it is recognized as an international food safety standards-setting organization in trade agreements to which the United States is a party. EPA may establish a tolerance that is different from a Codex MRL; however, FFDCA section 408(b)(4) requires that EPA explain the reasons for departing from the Codex level.

The Codex has not established MRLs for pendimethalin on any of these new uses.

C. Revisions to Petitioned-For Tolerances

The proposed tolerance of 3.0 ppm on leaf lettuce is being increased to 4.0 ppm. This is because the Agency used the Organization of Economic Cooperation and Development (OECD) tolerance calculation procedures in determining appropriate tolerance levels, whereas the petitioner used the North American Free Trade Agreement (NAFTA) tolerance calculation procedures.

V. Conclusion

Therefore, tolerances are established for residues of pendimethalin, *N*-(1-ethylpropyl)-3,4-dimethyl-2,6dinitrobenzenamine, and its 3, 5-dinitrobenzyl alcohol metabolite (CL 202347), in or on lettuce, leaf at 4.0 ppm; *Brassica,* leafy greens, subgroup 5B at 0.20 ppm; turnip greens at 0.20 ppm; melon subgroup 9A at 0.10 ppm; vegetable, soybean (edamame) at 0.10 ppm; and fruit, small vine climbing subgroup 13–07E, except grape at 0.10 ppm.

VI. Statutory and Executive Order Reviews

This final rule establishes tolerances under FFDCA section 408(d) in response to a petition submitted to the Agency. The Office of Management and Budget (OMB) has exempted these types of actions from review under Executive Order 12866, entitled ''Regulatory Planning and Review'' (58 FR 51735, October 4, 1993). Because this final rule has been exempted from review under Executive Order 12866, this final rule is not subject to Executive Order 13211, entitled ''Actions Concerning Regulations That Significantly Affect Energy Supply, Distribution, or Use'' (66 FR 28355, May 22, 2001) or Executive Order 13045, entitled ''Protection of Children from Environmental Health Risks and Safety Risks'' (62 FR 19885, April 23, 1997). This final rule does not contain any information collections subject to OMB approval under the Paperwork Reduction Act (PRA) (44 U.S.C. 3501 *et seq.*), nor does it require any special considerations under Executive Order 12898, entitled ''Federal Actions to Address Environmental Justice in Minority Populations and Low-Income Populations'' (59 FR 7629, February 16, 1994).

Since tolerances and exemptions that are established on the basis of a petition under FFDCA section 408(d), such as the tolerance in this final rule, do not require the issuance of a proposed rule, the requirements of the Regulatory Flexibility Act (RFA) (5 U.S.C. 601 *et seq.*), do not apply.

This final rule directly regulates growers, food processors, food handlers, and food retailers, not States or tribes, nor does this action alter the relationships or distribution of power and responsibilities established by Congress in the preemption provisions of FFDCA section 408(n)(4). As such, the Agency has determined that this action will not have a substantial direct effect on States or tribal governments, on the relationship between the national government and the States or tribal governments, or on the distribution of power and responsibilities among the various levels of government or between the Federal Government and Indian tribes. Thus, the Agency has determined that Executive Order 13132, entitled ''Federalism'' (64 FR 43255, August 10, 1999) and Executive Order 13175, entitled ''Consultation and Coordination with Indian Tribal Governments'' (65 FR 67249, November 9, 2000) do not apply to this final rule. In addition, this final rule does not impose any enforceable duty or contain any unfunded mandate as described under Title II of the Unfunded Mandates Reform Act of 1995 (UMRA) (2 U.S.C. 1501 *et seq.*).

This action does not involve any technical standards that would require Agency consideration of voluntary consensus standards pursuant to section 12(d) of the National Technology Transfer and Advancement Act of 1995 (NTTAA) (15 U.S.C. 272 note).

VII. Congressional Review Act

Pursuant to the Congressional Review Act (5 U.S.C. 801 *et seq.*), EPA will submit a report containing this rule and other required information to the U.S. Senate, the U.S. House of Representatives, and the Comptroller

General of the United States prior to publication of the rule in the **Federal Register**. This action is not a ''major rule'' as defined by 5 U.S.C. 804(2).

List of Subjects in 40 CFR Part 180

Environmental protection, Administrative practice and procedure, Agricultural commodities, Pesticides and pests, Reporting and recordkeeping requirements.

Dated: August 17, 2012.

Lois Rossi,

Director, Registration Division, Office of Pesticide Programs.

Therefore, 40 CFR chapter I is amended as follows:

PART 180—[AMENDED]

■ 1. The authority citation for part 180 continues to read as follows:

Authority: 21 U.S.C. 321(q), 346a and 371.

■ 2. Section 180.361 is amended by alphabetically adding the following commodities to the table in paragraph (a) to read as follows:

§ 180.361 Pendimethalin; tolerances for residues.

(a) * * *

Commodity	Parts per million
* * * * *	
Brassica, leafy greens, subgroup 5B	0.20
* * * * *	
Fruit, small vine climbing, except grape, subgroup 13–07E	0.10
* * * * *	
Lettuce, leaf	4.0
Melon subgroup 9A	0.10
* * * * *	
Turnip greens	0.20
* * * * *	
Vegetable, soybean, succulent	0.10
* * * * *	

* * * * *

[FR Doc. 2012–21361 Filed 8–28–12; 8:45 am]

BILLING CODE 6560–50–P

ENVIRONMENTAL PROTECTION AGENCY

40 CFR Part 180

[EPA–HQ–OPP–2010–0217; FRL–9360–4]

Clothianidin; Pesticide Tolerances

AGENCY: Environmental Protection Agency (EPA).

ACTION: Final rule.

SUMMARY: This regulation establishes tolerances for residues of clothianidin in or on rice, grain at 0.01 ppm. Valent U.S.A. Corporation requested these tolerances under the Federal Food, Drug, and Cosmetic Act (FFDCA).

DATES: This regulation is effective August 29, 2012. Objections and requests for hearings must be received on or before October 29, 2012, and must be filed in accordance with the instructions provided in 40 CFR part 178 (see also Unit I.C. of the **SUPPLEMENTARY INFORMATION**).

ADDRESSES: The docket for this action, identified by docket identification (ID) number EPA–HQ–OPP–2010–0217, is available at *http://www.regulations.gov* or at the OPP Docket in the Environmental Protection Agency Docket Center (EPA/DC), located in EPA West, Rm. 3334, 1301 Constitution Ave. NW., Washington, DC 20460–0001. The Public Reading Room is open from 8:30 a.m. to 4:30 p.m., Monday through Friday, excluding legal holidays. The telephone number for the Public Reading Room is (202) 566–1744, and the telephone number for the OPP Docket is (703) 305–5805. Please review the visitor instructions and additional information about the docket available at *http://www.epa.gov/dockets.*

FOR FURTHER INFORMATION CONTACT: Marianne Lewis, Registration Division (7505P), Office of Pesticide Programs, Environmental Protection Agency, 1200 Pennsylvania Ave. NW., Washington, DC 20460–0001; telephone number: (703) 308–8043; email address: *lewis.marianne@epa.gov.*

SUPPLEMENTARY INFORMATION:

I. General Information

A. Does this action apply to me?

You may be potentially affected by this action if you are an agricultural producer, food manufacturer, or pesticide manufacturer. Potentially affected entities may include, but are not limited to those engaged in the following activities:

- Crop production (NAICS code 111).
- Animal production (NAICS code 112).
- Food manufacturing (NAICS code 311).
- Pesticide manufacturing (NAICS code 32532).

This listing is not intended to be exhaustive, but rather to provide a guide for readers regarding entities likely to be affected by this action. Other types of entities not listed in this unit could also be affected. The North American Industrial Classification System (NAICS) codes have been provided to assist you and others in determining whether this action might apply to certain entities. If you have any questions regarding the applicability of this action to a particular entity, consult the person listed under **FOR FURTHER INFORMATION CONTACT**.

B. How can I access electronic copies of this document?

In addition to accessing electronically available documents at *http://www.regulations.gov,* you may access this **Federal Register** document electronically through the EPA Internet under the ''**Federal Register**'' listings at *http://www.epa.gov/fedrgstr.* You may also access a frequently updated electronic version of EPA's tolerance regulations at 40 CFR part 180 through the Government Printing Office's e-CFR cite at *http://www.gpoaccess.gov/ecfr.*

C. Can I file an objection or hearing request?

Under section 408(g) of FFDCA, 21 U.S.C. 346a, any person may file an objection to any aspect of this regulation and may also request a hearing on those objections. You must file your objection or request a hearing on this regulation in accordance with the instructions provided in 40 CFR part 178. To ensure proper receipt by EPA, you must identify docket ID number EPA–HQ–OPP–2010–0217 in the subject line on the first page of your submission. All requests must be in writing, and must be mailed or delivered to the Hearing Clerk as required by 40 CFR part 178 on or before October 29, 2012.

In addition to filing an objection or hearing request with the Hearing Clerk as described in 40 CFR part 178, please submit a copy of the filing that does not contain any CBI for inclusion in the public docket that is described in **ADDRESSES**. Information not marked confidential pursuant to 40 CFR part 2 may be disclosed publicly by EPA without prior notice. Submit this copy, identified by docket ID number EPA–HQ–OPP–2010–0217, by one of the following methods:

- *Federal eRulemaking Portal: http://www.regulations.gov.* Follow the online instructions for submitting comments.

Do not submit electronically any information you consider to be Confidential Business Information (CBI) or other information whose disclosure is restricted by statute.

• *Mail:* OPP Docket, Environmental Protection Agency Docket Center (EPA/DC), Mail Code: 28221T, 1200 Pennsylvania Ave. NW., Washington, DC 20460–0001.

• *Hand Delivery:* To make special arrangements for hand delivery or delivery of boxed information, please follow the instructions at *http://www.epa.gov/dockets/contacts.htm.*

Additional instructions on commenting or visiting the docket, along with more information about dockets generally, is available at *http://www.epa.gov/dockets.*

II. Petition for Tolerance

In the **Federal Register** of May 6, 2011 (76 FR 26291) (FRL–8870–3), EPA issued a notice pursuant to section 408(d)(3) of FFDCA, 21 U.S.C. 346a(d)(3), announcing the filing of a pesticide petition (PP 1F7832) by Valent U.S.A. Corporation, P.O. Box 8025, Walnut Creek, CA 94596. The petition requested that 40 CFR 180.586 be amended by establishing tolerances for residues of the insecticide clothianidin, (E)-1-(2-chloro-1,3-thiazol-5-ylmethyl)-3-methyl-2-nitroguanidine, in or on rice, grain at 0.01 ppm. That notice referenced a summary of the petition prepared by Valent U.S.A. Corporation, the registrant, which is available to the public in the docket, *http://www.regulations.gov.* There were no comments received in response to the notice of filing.

Valent U.S.A. Corporation requested tolerances for residues of clothianidin to support rice, grain uses.

III. Aggregate Risk Assessment and Determination of Safety

Section 408(b)(2)(A)(i) of FFDCA allows EPA to establish a tolerance (the legal limit for a pesticide chemical residue in or on a food) only if EPA determines that the tolerance is ''safe.'' Section 408(b)(2)(A)(ii) of FFDCA defines ''safe'' to mean that ''there is a reasonable certainty that no harm will result from aggregate exposure to the pesticide chemical residue, including all anticipated dietary exposures and all other exposures for which there is reliable information.'' This includes exposure through drinking water and in residential settings, but does not include occupational exposure. Section 408(b)(2)(C) of FFDCA requires EPA to give special consideration to exposure of infants and children to the pesticide chemical residue in establishing a tolerance and to ''ensure that there is a reasonable certainty that no harm will result to infants and children from aggregate exposure to the pesticide chemical residue * * *.''

Consistent with section 408(b)(2)(D) of FFDCA, and the factors specified in section 408(b)(2)(D) of FFDCA, EPA has reviewed the available scientific data and other relevant information in support of this action. EPA has sufficient data to assess the hazards of and to make a determination on aggregate exposure for the petitioned-for tolerances for residues of clothianidin in or on rice, grain at 0.01 ppm. EPA's assessment of exposures and risks associated with clothianidin follows.

A. Toxicological Profile

EPA has evaluated the available toxicity data and considered its validity, completeness, and reliability as well as the relationship of the results of the studies to human risk. EPA has also considered available information concerning the variability of the sensitivities of major identifiable subgroups of consumers, including infants and children.

EPA considered the toxicity of clothianidin as well as several metabolites and degradates in conducting this risk assessment. Metabolites/degradates of concern in plants include parent and TMG for leafy and root and tuber vegetables; parent-only for other crops; and parent, TZNG and MNG for rotational crops. For livestock commodities, the metabolites/degradates of concern include: Parent and TZU, TZG, TZNG and ATMG-pyruvate for ruminants; and parent and TZU, TZG, TZNG, and ATG-acetate for poultry. Acute toxicity and genotoxicity data are available for several metabolites/degradates of clothianidin. Given that the points of departure used for risk assessment are well below the LD_{50} levels observed in the acute toxicology studies and that clothianidin and its metabolites/degradates of toxicological concern are similar in structure, EPA is assuming that these compounds are toxicologically equivalent to clothianidin with respect to the endpoints being used for risk assessment.

Clothianidin and its metabolites and degradates have relatively low acute toxicity via oral, dermal and inhalation routes of exposure; however, acute oral administration of clothianidin in mouse and the TMG metabolite in rat showed evidence of increased relative toxicity. There is no evidence of dermal sensitization or eye irritation with the exception of the clothianidin-triazan intermediate, which is a dermal sensitizer. The available data indicate that there are no consistent target organs in mammals; however, some effects noted in the liver, hematopoietic system and kidney are similar to effects from other neonicotinoid insecticides.

In subchronic oral studies, the dog seemed to be more sensitive to clothianidin than the rat. In addition to decreases in body weight and body weight gains observed in both animals, dogs also displayed decreased white blood cells, albumin and total protein, as well as some anemia. Long-term dietary administration of clothianidin did not result in a wider spectrum of effects in the dog; in contrast, the chronic feeding studies in rats showed additional effects in the liver, ovaries and kidneys. In the mouse chronic oral study, increases in vocalization and decreases in body weight and body weight gain were noted.

Based on the lack of significant tumor increases in two adequate rodent carcinogenicity studies, EPA has classified clothianidin as ''not likely to be carcinogenic to humans.'' A bone marrow micronucleus assay in mice showed that clothianidin is neither clastogenic nor aneugenic up to a toxic oral dose. Additionally, a study on the livers of Wistar male mice showed no induction of unscheduled DNA synthesis up to the limit dose; therefore, mutagenicity is not of concern.

Clinical signs of neurotoxicity were exhibited in both rats (decreased arousal, motor activity and locomotor activity) and mice (decreased spontaneous motor activity, tremors and deep respirations) in acute neurotoxicity studies following exposure by gavage; however, no indications of neurotoxicity were observed following dietary exposure in the subchronic neurotoxicity study in rats.

There was no evidence of increased quantitative or qualitative susceptibility of rat or rabbit fetuses following *in utero* exposure to clothianidin in developmental studies; however, increased quantitative susceptibility of rat pups was seen in both the reproduction and developmental neurotoxicity studies. In the rat reproduction study, offspring toxicity (decreased body weight gains and absolute thymus weights in pups, delayed sexual maturation and an increase in stillbirths) was observed in the absence of maternal effects. In the developmental neurotoxicity study in rats, offspring effects (decreased body weights, body weight gains, motor activity and acoustic startle response amplitude) were noted at doses lower than those resulting in maternal toxicity.

Decreased absolute and relative thymus and spleen weights were observed in multiple studies; these studies showed possible evidence of effects on the immune system. In addition, juvenile rats in the rat reproduction study appeared to be more susceptible to these effects. However, a guideline immunotoxicity study showed no evidence of clothianidin-mediated immunotoxicity in adult rats and a developmental immunotoxicity study demonstrated no increased susceptibility for offspring with regard to immunotoxicity.

Specific information on the studies received and the nature of the adverse effects caused by clothianidin as well as the no-observed-adverse-effect-level (NOAEL) and the lowest-observed-adverse-effect-level (LOAEL) from the toxicity studies can be found at *http://www.regulations.gov* in document ''Clothianidin: Human Health Risk Assessment for Requested Foliar Uses on Rice, Seed Treatment on Leafy Vegetables, Increased Application Rate for Vegetables, and Expanded Uses on Fruiting Vegetables and Pome Fruit.'' in docket ID number EPA–HQ–OPP–2010–0217.

B. Toxicological Endpoints

Once a pesticide's toxicological profile is determined, EPA identifies toxicological points of departure (POD) and levels of concern to use in evaluating the risk posed by human exposure to the pesticide. For hazards that have a threshold below which there is no appreciable risk, the toxicological POD is used as the basis for derivation of reference values for risk assessment. PODs are developed based on a careful analysis of the doses in each toxicological study to determine the dose at which no adverse effects are observed (the NOAEL) and the lowest dose at which adverse effects of concern are identified (the LOAEL). Uncertainty/safety factors are used in conjunction with the POD to calculate a safe exposure level—generally referred to as a population-adjusted dose (PAD) or a reference dose (RfD)—and a safe margin of exposure (MOE). For non-threshold risks, the Agency assumes that any amount of exposure will lead to some degree of risk. Thus, the Agency estimates risk in terms of the probability of an occurrence of the adverse effect expected in a lifetime. For more information on the general principles EPA uses in risk characterization and a complete description of the risk assessment process, see *http://www.epa.gov/pesticides/factsheets/riskassess.htm.*

A summary of the toxicological endpoints for Clothianidin used for human risk assessment is shown in Table 1 of this unit.

TABLE 1—SUMMARY OF TOXICOLOGICAL DOSES AND ENDPOINTS FOR CLOTHIANIDIN FOR USE IN HUMAN HEALTH RISK ASSESSMENT

Exposure/scenario	Point of departure and uncertainty/safety factors	RfD, PAD, LOC for risk assessment	Study and toxicological effects
Acute dietary (Females 13–49 years of age).	NOAEL = 25 milligrams/kilograms/day (mg/kg/day) $UF_A = 10_X$ $UF_H = 10_X$ FQPA SF = 1_X	Acute RfD = 0.25 mg/kg/day aPAD = 0.25mg/kg/day	Rabbit developmental study LOAEL = 75 mg/kg/day based on increased litter incidence of a missing lobe of the lung
Acute dietary (General population)	NOAEL = 25 mg/kg/day $UF_A = 10_X$ $UF_H = 10_X$ FQPA SF = 1_X	Acute RfD = 0.25 mg/kg/day aPAD = 0.25 mg/kg/day	Special neurotoxicity/pharmacological study in mice LOAEL = 50 mg/kg/day based on transient signs of decreased spontaneous motor activity, tremors and deep respirations
Chronic dietary (All populations including infants and children).	NOAEL= 9.8 mg/kg/day $UF_A = 10_X$ $UF_H = 10_X$ FQPA SF = 1_X	Chronic RfD = 0.098 mg/kg/day cPAD = 0.098 mg/kg/day	2-Generation reproduction study LOAEL = 31.2 mg/kg/day based on decreased body weight gains and delayed sexual maturation, decreased absolute thymus weights in F1 pups and increased stillbirths in both generations
Incidental oral (Short and intermediate term).	NOAEL= 9.8 mg/kg/day $UF_A = 10_X$ $UF_H = 10_X$ FQPA SF = 1_X	LOC for MOE = 100	2-Generation reproduction study LOAEL = 31.2 mg/kg/day based on decreased body weight gains and delayed sexual maturation, decreased absolute thymus weights in F1 pups and increased stillbirths in both generations
Dermal (All durations)	Oral study NOAEL = 9.8 mg/kg/day (dermal absorption rate = 1%) $UF_A = 10_X$ $UF_H = 10_X$ FQPA SF = 1_X	LOC for MOE = 100	2-Generation reproduction study LOAEL = 31.2 mg/kg/day based on decreased body weight gains and delayed sexual maturation, decreased absolute thymus weights in F1 pups and increased stillbirths in both generations

TABLE 1—SUMMARY OF TOXICOLOGICAL DOSES AND ENDPOINTS FOR CLOTHIANIDIN FOR USE IN HUMAN HEALTH RISK ASSESSMENT—Continued

Exposure/scenario	Point of departure and uncertainty/ safety factors	RfD, PAD, LOC for risk assessment	Study and toxicological effects
Inhalation (All durations)	Oral study NOAEL= 9.8 mg/kg/day (inhalation absorption rate = 100%) $UF_A = 10_X$ $UF_H = 10_X$ FQPA SF = 1_X	LOC for MOE = 100	2-Generation reproduction study LOAEL = 31.2 mg/kg/day based on decreased body weight gains and delayed sexual maturation, decreased absolute thymus weights in F1 pups and increased still-births in both generations
Cancer (Oral, dermal, inhalation)	''Not likely to be Carcinogenic to Humans''		

UF_A = extrapolation from animal to human (interspecies). UF_H = potential variation in sensitivity among members of the human population (intraspecies). FQPA SF = Food Quality Protection Act Safety Factor. PAD = population adjusted dose (a = acute, c = chronic). RfD = reference dose. MOE = margin of exposure. LOC = level of concern.

C. Exposure Assessment

1. *Dietary exposure from food and feed uses.* In evaluating dietary exposure to clothianidin, EPA considered exposure from the petitioned-for tolerances as well as all existing clothianidin tolerances in 40 CFR 180.586. EPA assessed dietary exposures from clothianidin in food as follows:

i. *Acute exposure.* Quantitative acute dietary exposure and risk assessments are performed for a food-use pesticide, if a toxicological study has indicated the possibility of an effect of concern occurring as a result of a 1-day or single exposure.

Such effects were identified for clothianidin. In estimating acute dietary exposure, EPA used food consumption information from the United States Department of Agriculture (USDA) 1994–1996 and 1998 Nationwide Continuing Surveys of Food Intake by Individuals (CSFII). As to residue levels in food from use of clothianidin, EPA used maximum field trial values, empirical processing factors and assumed 100 percent crop treated (PCT) for all commodities. Clothianidin is a major metabolite of thiamethoxam, and there are a number of crops for which uses of both clothianidin and thiamethoxam have been registered. The labels for the various end-use products containing these active ingredients prohibit the application of both active ingredients to the same crop during a growing cycle. Due to that restriction and the assumption of 100 PCT, a single value reflecting the greatest clothianidin residue from either active ingredient has been used for crops listed for use with both active ingredients (versus combined estimates from clothianidin and from thiamethoxam). Generally, this assessment uses the established or recommended clothianidin tolerance for crops having tolerances for both compounds (the exception being low-growing berry, subgroup 13–07G, which is based on observed clothianidin residues in thiamethoxam strawberry field trials). For foods with thiamethoxam tolerances but without clothianidin tolerances, maximum residues of clothianidin observed in thiamethoxam field trials have been used in these assessments. These include meats, meat by-products, artichoke, tropical fruits, coffee, hop, mint, rice, and strawberry. The metabolism of clothianidin is complex, with a few major (> 10% of the total radioactive residues) and numerous minor metabolites. Metabolites/degradates of concern in plants include clothianidin and TMG for leafy and root and tuber vegetables; parent-only for other crops; and parent, TZNG and MNG for rotational crops. For livestock commodities, the metabolites of concern include: parent and TZU, TZG, TZNG, and ATMG-pyruvate for ruminants; and parent and TZU, TZG, TZNG, and ATG-acetate for poultry. For leafy vegetables the EPA required analysis for residues of TMG along with parent in field trial samples. Residues of TMG were shown to occur in leafy vegetables at levels approximately 10-fold below those of clothianidin. EPA has not included these metabolites in the tolerance expression for plant or animal commodities because the metabolites are only found in certain commodities, including the metabolites would create tolerance harmonization issues with Canada, and monitoring residues of clothianidin based on parent only would be representative of total clothianidin residues and thus adequate for enforcement. Because the metabolites are not included in the tolerance expressions, an adjustment factor of 1.1 has been incorporated into the assessment for leafy vegetables to account for the presence of the metabolite TMG, and an adjustment factor of 1.5 has been incorporated for livestock-derived commodities (milk) to account for the presence of metabolites TZU, TZG, TZNG, ATMG-pyruvate and ATG-acetate. The 1.1 adjustment factor is based on field trial data showing TMG does not exceed 10% of the parent compound residue level in leafy vegetables and the 1.5 factor was based on metabolism data.

ii. *Chronic exposure.* In conducting the chronic dietary exposure assessment EPA used the food consumption data from the USDA 1994–1996 and 1998 CSFII. As to residue levels in food, EPA assessed chronic dietary exposure using the same residue information and assumptions regarding metabolites/degradates as in the acute exposure analysis.

iii. *Cancer.* Based on the lack of evidence of carcinogenicity in two adequate rodent carcinogenicity studies, EPA has classified clothianidin as ''not likely to be carcinogenic to humans.'' Therefore, a quantitative exposure assessment to evaluate cancer risk is unnecessary.

iv. *Anticipated residue and percent crop treated (PCT) information.*

For food with thiamethoxam tolerances but without clothianidin tolerances, maximum residues of clothianidin observed in thiamethoxam field trials have been used in these assessments. For all commodities, 100 PCT was assumed.

2. *Dietary exposure from drinking water.* The Agency used screening level water exposure models in the dietary exposure analysis and risk assessment for clothianidin in drinking water. These simulation models take into account data on the physical, chemical, and fate/transport characteristics of

clothianidin. Further information regarding EPA drinking water models used in pesticide exposure assessment can be found at *http://www.epa.gov/oppefed1/models/water/index.htm.*

Based on the First Index Reservoir Screening Tool (FIRST) and Screening Concentration in Ground Water (SCI–GROW) models, the estimated drinking water concentrations (EDWCs) of clothianidin for surface water are estimated to be 72 parts per billion (ppb) for acute exposures and <72 ppb for chronic exposures.

Modeled estimates of drinking water concentrations were directly entered into the dietary exposure model. The EDWC of 72 ppb was used to account for residues of clothianidin in both the acute and chronic dietary risk assessments.

3. *From non-dietary exposure.* The term ''residential exposure'' is used in this document to refer to non-occupational, non-dietary exposure (e.g., for lawn and garden pest control, indoor pest control, termiticides, and flea and tick control on pets).

Clothianidin is currently registered for use on turf. Residential handler exposure is not expected from the currently registered or proposed uses of clothianidin since these products are to be applied by commercial applicators. Adult short- and intermediate-term postapplication exposures were assessed for dermal exposures from commercial applications (via granular push-type spreaders), dermal post-application contact and golfer postapplication contact. For toddlers, short- and intermediate-term postapplication incidental oral (hand-to-mouth and soil ingestion) and dermal risks were assessed for exposure to treated turf.

4. *Cumulative effects from substances with a common mechanism of toxicity.* Section 408(b)(2)(D)(v) of FFDCA requires that, when considering whether to establish, modify, or revoke a tolerance, the Agency consider ''available information'' concerning the cumulative effects of a particular pesticide's residues and ''other substances that have a common mechanism of toxicity.''

Clothianidin is a member of the neonicotinoid class of pesticides and is a metabolite of another neonicotinoid, thiamethoxam. Structural similarities or common effects do not constitute a common mechanism of toxicity. Evidence is needed to establish that the chemicals operate by the same, or essentially the same sequence of major biochemical events (EPA, 2002). Although clothianidin and thiamethoxam bind selectively to insect nicotinic acetylcholine receptors (nAChR), the specific binding site(s)/receptor(s) for clothianidin, thiamethoxam, and the other neonicotinoids are unknown at this time. Additionally, the commonality of the binding activity itself is uncertain, as preliminary evidence suggests that clothianidin operates by direct competitive inhibition, while thiamethoxam is a noncompetitive inhibitor. Furthermore, even if future research shows that neonicotinoids share a common binding activity to a specific site on insect nAChRs, there is not necessarily a relationship between this pesticidal action and a mechanism of toxicity in mammals. Structural variations between the insect and mammalian nAChRs produce quantitative differences in the binding affinity of the neonicotinoids towards these receptors, which, in turn, confers the notably greater selective toxicity of this class towards insects, including aphids and leafhoppers, compared to mammals. While the insecticidal action of the neonicotinoids is neurotoxic, the most sensitive regulatory endpoint for clothianidin is based on unrelated effects in mammals, including changes in body and thymus weights, delays in sexual maturation, and still births. Additionally, the most sensitive toxicological effect in mammals differs across the neonicotinoids (such as testicular tubular atrophy with thiamethoxam, and mineralized particles in thyroid colloid with imidaclopid). Thus, there is currently no evidence to indicate that neonicotinoids share common mechanisms of toxicity, and EPA is not following a cumulative risk approach based on a common mechanism of toxicity for the neonicotinoids. For information regarding EPA's efforts to determine which chemicals have a common mechanism of toxicity and to evaluate the cumulative effects of such chemicals, see the policy statements concerning common mechanism determinations and procedures for cumulating effects from substances found to have a common mechanism released by OPP on EPA's Web site at *http://www.epa.gov/pesticides/cumulative/.*

D. Safety Factor for Infants and Children

1. *In general.* Section 408(b)(2)(c) of FFDCA provides that EPA shall apply an additional tenfold (10X) margin of safety for infants and children in the case of threshold effects to account for prenatal and postnatal toxicity and the completeness of the database on toxicity and exposure unless EPA determines based on reliable data that a different margin of safety will be safe for infants and children. This additional margin of safety is commonly referred to as the FQPA Safety Factor (SF). In applying this provision, EPA either retains the default value of 10X, or uses a different additional safety factor when reliable data available to EPA support the choice of a different factor.

2. *Prenatal and postnatal sensitivity.* There is no indication of increased quantitative or qualitative susceptibility, as compared to adults, of rat and rabbit fetuses following *in utero* exposure to clothianidin in developmental studies. However, increased quantitative susceptibility was observed in both the developmental neurotoxicity and rat multi-generation reproduction studies. In the developmental neurotoxicity study, offspring toxicity (decreased body weight gains, motor activity and acoustic startle response) was seen at a lower dose than that which caused maternal toxicity. In the two-generation rat reproduction study, offspring toxicity (decreased body weight gains, delayed sexual maturation in males, decreased absolute thymus weights in F1 pups of both sexes and an increase in stillbirths in both generations) was seen at a dose lower than that which caused parental toxicity.

3. *Conclusion.* In the final rule published in the **Federal Register** of February 6, 2008 (73 FR 6851) (FRL–8346–9), EPA had previously determined that the FQPA SF for clothianidin should be retained at 10X because EPA had required the submission of a developmental immunotoxicity study to address the combination of evidence of decreased absolute and adjusted organ weights of the thymus and spleen in multiple studies in the clothianidin data base, and evidence showing that juvenile rats in the two-generation reproduction study appear to be more susceptible to these potential immunotoxic effects. In the absence of a developmental immunotoxicity study EPA concluded that there was sufficient uncertainty regarding immunotoxic effects in the young that the 10X FQPA factor should be retained as a database uncertainty factor. Since that determination, EPA has received and reviewed an acceptable/guideline developmental immunotoxicity study, which demonstrated no treatment-related effects. Taking the results of this study into account as well as the rest of the data on clothianidin, EPA has determined that reliable data show the safety of infants and children would be adequately protected if the FQPA SF for clothianidin were reduced to 1X. That

decision is based on the following findings:

The toxicity database for clothianidin is complete. As noted, the prior data gap concerning developmental immunotoxicity has been addressed by the submission of an acceptable developmental immunotoxicity study.

i. There are no residual concerns regarding potential pre- and postnatal toxicity in the young. A rat developmental neurotoxicity study is available and shows evidence of increased quantitative susceptibility of offspring. However, EPA considers the degree of concern for the developmental neurotoxicity study to be low for pre- and postnatal toxicity because the NOAEL and LOAEL were well characterized, and the doses and endpoints selected for risk assessment are protective of the observed susceptibility.

While the rat multi-generation reproduction study showed evidence of increased quantitative susceptibility of offspring compared to adults, the degree of concern is low because the study NOAEL has been selected as the POD for risk assessment purposes for relevant exposure routes and durations. In addition, the potential immunotoxic effects observed in the study have been further characterized with the submission of a developmental immunotoxicity study that showed no evidence of susceptibility. As a result, there are no concerns or residual uncertainties for pre- and postnatal toxicity after establishing toxicity endpoints and traditional UFs to be used in the risk assessment for clothianidin.

ii. There are no residual uncertainties identified in the exposure databases. The dietary food exposure assessments were performed based on assumptions that were judged to be highly conservative and health-protective for all durations and population subgroups, including maximum field trial residues, adjustment factors from metabolite data, empirical processing factors, and 100 PCT for all commodities. Additionally, EPA made conservative (protective) assumptions in the ground and surface water modeling used to assess exposure to clothianidin in drinking water. EPA used similarly conservative assumptions to assess postapplication exposure of children and adults as well as incidental oral exposure of toddlers. These assessments will not underestimate the exposure and risks posed by clothianidin.

E. Aggregate Risks and Determination of Safety

EPA determines whether acute and chronic dietary pesticide exposures are safe by comparing aggregate exposure estimates to the aPAD and cPAD. For linear cancer risks, EPA calculates the probability of additional cancer cases given the estimated aggregate exposure. Short-, intermediate-, and chronic-term risks are evaluated by comparing the estimated aggregate food, water, and residential exposure to the appropriate POD to ensure that an adequate MOE exists.

1. *Acute risk.* Using the exposure assumptions discussed in this unit for acute exposure, the acute dietary exposure from food and water to clothianidin will occupy 24% of the aPAD for children 1–2 years old, the population group receiving the greatest exposure.

2. *Chronic risk.* Using the exposure assumptions described in this unit for chronic exposure, EPA has concluded that chronic exposure to clothianidin from food and water will utilize 21% of the cPAD for children 1–2 years old, the population group receiving the greatest exposure. Based on the explanation in Unit III.C.3., regarding residential use patterns, chronic residential exposure to residues of clothianidin is not expected.

3. *Short- and intermediate-term risk.* Short- and intermediate-term aggregate exposure takes into account short- and intermediate-term residential exposure plus chronic exposure to food and water (considered to be a background exposure level).

Clothianidin is currently registered for use on turf that could result in short- and intermediate-term residential exposure and the Agency has determined that it is appropriate to aggregate chronic exposure through food and water with short- and intermediate-term residential exposures to clothianidin. Using the exposure assumptions described in this unit for short- and intermediate-term exposures, EPA has concluded the combined short- and intermediate-term food, water, and residential exposures result in aggregate MOEs of greater than 450 for all population subgroups. As the aggregate MOEs are greater than 100 (the LOC) for all population subgroups, including infants and children, short- and intermediate-term aggregate exposures to clothianidin are not of concern to EPA.

4. *Aggregate cancer risk for U.S. population.* Based on the lack of evidence of carcinogenicity in mice and rats at doses that were judged to be adequate to assess the carcinogenic potential, clothianidin was classified as ''not likely to be carcinogenic to humans,'' and is not expected to pose a cancer risk to humans.

5. *Determination of safety.* Based on these risk assessments, EPA concludes that there is a reasonable certainty that no harm will result to the general population or to infants and children from aggregate exposure to clothianidin residues.

IV. Other Considerations

A. Analytical Enforcement Methodology

Adequate enforcement methodology is available to enforce the tolerance expression. This method involves extraction of residues with acetonitrile/water, cleanup using solid phase extraction (SPE) cartridges, and analysis of clothianidin by LC/MS/MS. The method may be requested from: Chief, Analytical Chemistry Branch, Environmental Science Center, 701 Mapes Rd., Ft. Meade, MD 20755–5350; telephone number: (410) 305–2905; email address: *residuemethods@epa.gov*.

B. International Residue Limits

In making its tolerance decisions, EPA seeks to harmonize U.S. tolerances with international standards whenever possible, consistent with U.S. food safety standards and agricultural practices. EPA considers the international maximum residue limits (MRLs) established by the Codex Alimentarius Commission (Codex), as required by FFDCA section 408(b)(4). The Codex Alimentarius is a joint U.N. Food and Agriculture Organization/World Health Organization food standards program, and it is recognized as an international food safety standards-setting organization in trade agreements to which the United States is a party. EPA may establish a tolerance that is different from a Codex MRL; however, FFDCA section 408(b)(4) requires that EPA explain the reasons for departing from the Codex level.

The Codex has not established a MRL for clothianidin in/on rice, grain.

C. Revisions to Petitioned-For Tolerances

The tolerance is considered appropriate as proposed; therefore, no revisions were needed.

V. Conclusion

Therefore, tolerances are established for residues of clothianidin, (E)-1-(2-chloro-1,3-thiazol-5-ylmethyl)-3-methyl-2-nitroguanidine, in or on rice, grain at 0.01 ppm.

VI. Statutory and Executive Order Reviews

This final rule establishes tolerances under section 408(d) of FFDCA in response to a petition submitted to the Agency. The Office of Management and Budget (OMB) has exempted these types of actions from review under Executive Order 12866, entitled *Regulatory Planning and Review* (58 FR 51735, October 4, 1993). Because this final rule has been exempted from review under

Executive Order 12866, this final rule is not subject to Executive Order 13211, entitled *Actions Concerning Regulations That Significantly Affect Energy Supply, Distribution, or Use* (66 FR 28355, May 22, 2001) or Executive Order 13045, entitled *Protection of Children from Environmental Health Risks and Safety Risks* (62 FR 19885, April 23, 1997). This final rule does not contain any information collections subject to OMB approval under the Paperwork Reduction Act (PRA), 44 U.S.C. 3501 *et seq.,* nor does it require any special considerations under Executive Order 12898, entitled *Federal Actions to Address Environmental Justice in Minority Populations and Low-Income Populations* (59 FR 7629, February 16, 1994).

Since tolerances and exemptions that are established on the basis of a petition under section 408(d) of FFDCA, such as the tolerance in this final rule, do not require the issuance of a proposed rule, the requirements of the Regulatory Flexibility Act (RFA) (5 U.S.C. 601 *et seq.*) do not apply.

This final rule directly regulates growers, food processors, food handlers, and food retailers, not States or tribes, nor does this action alter the relationships or distribution of power and responsibilities established by Congress in the preemption provisions of section 408(n)(4) of FFDCA. As such, the Agency has determined that this action will not have a substantial direct effect on States or tribal governments, on the relationship between the national government and the States or tribal governments, or on the distribution of power and responsibilities among the various levels of government or between the Federal Government and Indian tribes. Thus, the Agency has determined that Executive Order 13132, entitled *Federalism* (64 FR 43255, August 10, 1999) and Executive Order 13175, entitled *Consultation and Coordination with Indian Tribal Governments* (65 FR 67249, November 9, 2000) do not apply to this final rule. In addition, this final rule does not impose any enforceable duty or contain any unfunded mandate as described under Title II of the Unfunded Mandates Reform Act of 1995 (UMRA) (Pub. L. 104–4).

This action does not involve any technical standards that would require Agency consideration of voluntary consensus standards pursuant to section 12(d) of the National Technology Transfer and Advancement Act of 1995 (NTTAA), Public Law 104–113, section 12(d) (15 U.S.C. 272 note).

VII. Congressional Review Act

The Congressional Review Act, 5 U.S.C. 801 *et seq.,* generally provides that before a rule may take effect, the agency promulgating the rule must submit a rule report to each House of the Congress and to the Comptroller General of the United States. EPA will submit a report containing this rule and other required information to the U.S. Senate, the U.S. House of Representatives, and the Comptroller General of the United States prior to publication of this final rule in the **Federal Register**. This final rule is not a ''major rule'' as defined by 5 U.S.C. 804(2).

List of Subjects in 40 CFR Part 180

Environmental protection, Administrative practice and procedure, Agricultural commodities, Pesticides and pests, Reporting and recordkeeping requirements.

Dated: August 17, 2012.

Daniel J. Rosenblatt,

Acting Director, Registration Division, Office of Pesticide Programs.

Therefore, 40 CFR chapter I is amended as follows:

PART 180—[AMENDED]

■ 1. The authority citation for part 180 continues to read as follows:

Authority: 21 U.S.C. 321(q), 346a and 371.

■ 2. Section 180.586 is amended by revising paragraph (a)(1) introductory text, and by alphabetically adding the commodity ''rice, grain'' in the table in paragraph (a)(1) to read as follows:

§ 180.586 Clothianidin; tolerances for residues.

(a) *General.* (1) Tolerances are established for residues of the insecticide clothianidin, including its metabolites and degradates. Compliance with the tolerance levels specified below is to be determined by measuring only clothianidin, (*E*)-*N*-[(2-Chloro-5-thiazolyl)methyl]-*N*′ -methyl-*N*″ -nitroguanidine, in or on the following raw agricultural commodities:

Commodity	Parts per million
* * * * * * *	
Rice, grain	0.01
* * * * * * *	

* * * * *

[FR Doc. 2012–21215 Filed 8–28–12; 8:45 am]

BILLING CODE 6560–50–P

DEPARTMENT OF DEFENSE

Defense Acquisition Regulations System

48 CFR Parts 201 and 212

RIN 0750–AH65

Defense Federal Acquisition Regulation Supplement: Inflation Adjustment of Threshold for Acquisition of Right-Hand Drive Passenger Sedans (DFARS Case 2012–D016)

AGENCY: Defense Acquisition Regulations System, Department of Defense (DoD).

ACTION: Final rule.

SUMMARY: DoD is adopting as final, without change, an interim rule amending the Defense Federal Acquisition Regulation Supplement (DFARS) to implement a section of the National Defense Authorization Act for Fiscal Year 2012 that requires adjustment of the statutory dollar limitation on the acquisition of right-hand drive passenger sedans.

DATES: *Effective Date:* August 29, 2012.

FOR FURTHER INFORMATION CONTACT: Ms. Amy Williams, telephone 571–372–6106.

SUPPLEMENTARY INFORMATION:

I. Background

DoD published an interim rule in the **Federal Register** at 77 FR 19127 on March 30, 2012, to implement section 814(b) of the National Defense Authorization Act for Fiscal Year 2012 (Pub. L. 112–81). The interim rule adjusted the dollar limitation on the acquisition of right-hand drive passenger sedans from $30,000 per vehicle to $40,000 per vehicle, and included this dollar limitation on the list of statutory acquisition-related dollar thresholds subject to inflation adjustment in accordance with the requirements of 41 U.S.C. 1908. One respondent submitted a public comment in response to the interim rule.

II. Discussion and Analysis of the Public Comments

The respondent concurred with the inflation threshold increase listed at DFARS 212.271. There were no comments suggesting changes to the interim rule. Therefore, DoD is finalizing the interim rule without change.

III. Executive Orders 12866 and 13563

Executive Orders (E.O.s) 12866 and 13563 direct agencies to assess all costs and benefits of available regulatory alternatives and, if regulation is necessary, to select regulatory approaches that maximize net benefits (including potential economic, environmental, public health and safety effects, distributive impacts, and equity). E.O. 13563 emphasizes the importance of quantifying both costs and benefits, of reducing costs, of harmonizing rules, and of promoting flexibility. This is not a significant regulatory action and, therefore, was not subject to review under section 6(b) of E.O. 12866, Regulatory Planning and Review, dated September 30, 1993. This rule is not a major rule under 5 U.S.C. 804.

IV. Regulatory Flexibility Act

DoD certifies that this final rule will not have a significant economic impact on a substantial number of small entities within the meaning of the Regulatory Flexibility Act, 5 U.S.C. 601, et seq., because it merely adjusts upward the current limitation for acquisition of right-hand drive passenger vehicles from $30,000 to $40,000 due to inflation.

V. Paperwork Reduction Act

The rule does not contain any information collection requirements that require the approval of the Office of Management and Budget under the Paperwork Reduction Act (44 U.S.C. chapter 35).

List of Subjects in 48 CFR Parts 201 and 212

Government procurement.

Manuel Quinones,

Editor, Defense Acquisition Regulations System.

Interim Rule Adopted as Final Without Change

■ Accordingly, the interim rule amending 48 CFR parts 201 and 212, which was published at 77 FR 19127 on March 30, 2012, is adopted as a final rule without change.

[FR Doc. 2012–21062 Filed 8–28–12; 8:45 am]

BILLING CODE 5001–06–P

DEPARTMENT OF DEFENSE

Defense Acquisition Regulations System

48 CFR Parts 209, 210, 215, 217, 230, 237, 245, and 252

Defense Federal Acquisition Regulation Supplement; Technical Amendments

AGENCY: Defense Acquisition Regulations System, Department of Defense (DoD).

ACTION: Final rule.

SUMMARY: DoD is making technical amendments to the Defense Federal Acquisition Regulation Supplement (DFARS) to provide needed editorial changes.

DATES: *Effective Date:* August 29, 2012.

FOR FURTHER INFORMATION CONTACT: Mr. Manuel Quinones, Defense Acquisition Regulations System, OUSD(AT&L)DPAP(DARS), Room 3B855, 3060 Defense Pentagon, Washington, DC 20301–3060. Telephone 571–372–6088; facsimile 571–372–6094.

SUPPLEMENTARY INFORMATION: This final rule amends the DFARS as follows:

1. Clarifies the designation at 209.403(1) for the Department of Army debarring and suspending official.
2. Revises codes of offices designated to receive reports referenced at 215.403–1(c)(3)(B) and 230.201–5.
3. Directs contracting officers to additional DFARS procedures, guidance, and information by adding references at 210.002, 217.7404, 237.102–77, and 237.102–78.
4. Corrects a form title at 245.7001–6.
6. Corrects a typographical error in clause 252.219–7003, paragraph (f), and revises the clause date.
7. Makes a conforming change to clause 252.225–7017(a) to add Armenia to the definition of ''Designated country'', which was inadvertently omitted from publication of the final rule under DFARS Case 2011–D046 (77 FR 30368). The final rule for DFARS Case 2011–D057 (77 FR 4631) had previously added Armenia as a World Trade Organization Government Procurement Agreement country and a designated county.

List of Subjects in 48 CFR Parts 209, 210, 215, 217, 230, 237, 245, and 252

Government procurement.

Manuel Quinones,

Editor, Defense Acquisition Regulations System.

Therefore, 48 CFR parts 209, 210, 215, 217, 230, 237, 245, and 252 are amended as follows:

■ 1. The authority citation for 48 CFR parts 209, 215, 217, 245, and 252 continues to read as follows:

Authority: 41 U.S.C. 1303 and 48 CFR chapter 1.

PART 209—CONTRACTOR QUALIFICATIONS

209.403 [Amended]

■ 2. Section 209.403(1) is amended by removing ''Director, Soldier & Family Legal Services'' and adding in its place ''Army—Director, Soldier & Family Legal Services''.

PART 210—MARKET RESEARCH

■ 3. The authority citation for 48 CFR 210 is revised to read as follows:

Authority: 41 U.S.C. 1303 and 48 CFR chapter 1.

■ 4. Section 210.002 is added to read as follows:

210.002 Procedures.

When contracting for services, see the market research report guide for improving the tradecraft in services acquisition at PGI 210.070.

PART 215—CONTRACTING BY NEGOTIATION

215.403–1 [Amended]

■ 5. Section 215.403–1(c)(3)(B) is amended by removing ''ATTN: DPAP/CPF'' and adding in its place ''ATTN: DPAP/CPIC''.

PART 217—SPECIAL CONTRACTING METHODS

■ 6. Section 217.7404 is amended by adding introductory text to read as follows:

217.7404 Limitations.

See PGI 217.7404 for additional guidance on obtaining approval to authorize use of an undefinitized contract action, documentation requirements, and other limitations on their use.

* * * * *

PART 230—COST ACCOUNTING STANDARDS ADMINISTRATION

■ 7. The authority citation for 48 CFR 230 is revised to read as follows:

Authority: 41 U.S.C. 1303 and 48 CFR chapter 1.

230.201–5 [Amended]

■ 8. Section 230.201–5(e) is amended by removing ''ATTN: DPAP/CPF'' and adding in its place ''ATTN: DPAP/CPIC''.

PART 237—SERVICE CONTRACTING

■ 9. The authority citation for 48 CFR 237 is revised to read as follows:

Authority: 41 U.S.C. 1303 and 48 CFR chapter 1.

■ 10. Section 237.102–77 is added to read as follows:

237.102–77 Automated requirements roadmap tool.

See PGI 237.102–77 for guidance on using the Automated Requirements Roadmap Tool to develop and organize performance requirements into draft versions of the performance work statement, the quality assurance surveillance plan, and the performance requirements summary.

■ 11. Section 237.102–78 is added to read as follows:

237.102–78 Market research report guide for improving the tradecraft in services acquisition.

See PGI 210.070 for guidance on use of the market research report guide to conduct and document market research for service acquisitions.

PART 245—GOVERNMENT PROPERTY

245.7001–6 [Amended]

■ 12. In 245.7001–6, amend the section heading by removing ''DD Form 1822,'' and adding in its place ''DLA Form 1822,''.

PART 252—SOLICITATION PROVISIONS AND CONTRACT CLAUSES

252.219–7003 [Amended]

■ 13. Section 252.219–7003 is amended by—

■ a. Amending the clause date by removing ''(JUN 2012)'' and adding in its place ''(AUG 2012)''; and

■ b. Amending paragraph (f) by removing the word ''approval'' and adding in its place ''approved''.

252.225–7017 [Amended]

■ 14. Section 252.225–7017 is amended by—

■ a. Amending the clause date by removing ''(JUN 2012)'' and adding in its place ''(AUG 2012)''; and

■ b. Amending the paragraph (a) definition of ''Designated country'' at paragraph (i) by adding the country of Armenia within the parentheses at the beginning of the (WTO GPA) country list.

[FR Doc. 2012–21053 Filed 8–28–12; 8:45 am]

BILLING CODE 5001–06–P

DEPARTMENT OF DEFENSE

Defense Acquisition Regulations System

48 CFR Parts 211, 212, and 252

RIN 0750–AG83

Defense Federal Acquisition Regulation Supplement: Reporting of Government-Furnished Property (DFARS Case 2012–D001)

AGENCY: Defense Acquisition Regulations System, Department of Defense (DoD).

ACTION: Final rule.

SUMMARY: DoD is issuing a final rule amending the Defense Federal Acquisition Regulation Supplement (DFARS) to revise and standardize reporting requirements for Government-furnished property.

DATES: *Effective Date:* August 29, 2012.

FOR FURTHER INFORMATION CONTACT: Ms. Meredith Murphy, telephone 571–372–6098.

SUPPLEMENTARY INFORMATION:

I. Background

DoD published a proposed rule under DFARS Case 2009–D043 in the **Federal Register** at 75 FR 80426 on December 22, 2010. Subsequently, DoD published a second proposed rule, under DFARS Case 2012–D001, in the **Federal Register** at 76 FR 64885 on October 19, 2011, to revise and standardize reporting requirements for Government-furnished property to include items uniquely and non-uniquely identified, and to clarify policy for contractor access to Government supply sources. DoD held a public meeting to discuss the second proposed rule on November 17, 2011. One respondent submitted comments in response to the second proposed rule. Discussions from the public meeting held to discuss the second proposed rule, as well as the public comments, were considered in drafting this final rule.

II. Discussion and Analysis of the Public Comments

DoD reviewed the public comments in the development of the final rule. A discussion of the comments and the changes made to the rule as a result of those comments is provided, as follows:

A. Summary of Significant Changes

The revisions modify and standardize contractor Government property reporting requirements, making revisions that are necessary given DoD's emphasis on property accountability. The final rule alters the requirements of the current clause, which requires Defense contractors to report (primarily) Government-furnished equipment items valued at $5,000 or more, to a new requirement to report all serialized Government-furnished property regardless of unit acquisition value. The revised reporting requirement includes electronic receipt requirements, which will be expanded to non-serialized items by 2014. This effort is consistent with Secretary of Defense memorandum dated October 13, 2011, which emphasizes both asset accountability and the need to accelerate key elements of DoD's audit readiness plans.

B. Analysis of Public Comments

1. General

Comment: A respondent stated that the rule is ''premature.'' The respondent thought that the current DFARS and its associated contract clause at 252.211–7007, Reporting of Government-Furnished Property, should include a summary of end processes for various types of contracts, such as production, depot, or services, and should include references to business rules used in each type of arrangement. The respondent also proposed that the ''military departments must own the end to end process and use the IUID registry as a tool to manage process, programs and items. The IUID Registry must be integrated into other DoD business management systems. A stand-alone contractor centric system will not provide sufficient benefits to sustain existence.'' In support of its position, the respondent proposed to add to the DFARS text, at 211.274–4, a new paragraph (f) as follows:

''A phased approach by program and department, shall be taken to populate the IUID Registry as determined and directed by the Director, Defense Procurement & Acquisition Policy.''

The respondent further stated that including the proposed DFARS text in part 211, rather than DFARS part 245, makes the requirements part of a Government-furnished property reporting system rather than part of the contractor's Government property system.

Response: As suggested by the respondent in separate correspondence, this revision to current DFARS requirements may be long overdue. In a letter dated October 18, 2011, the respondent requested the Director, DPAP, to ''remind DoD agencies of their obligation to use the IUID registry as the system of record for GFP in the custody of contractors.'' DoD has been considering those changes and has considered public comments submitted in response to two proposed rules and a public meeting.

A phased implementation, as suggested by the respondent, would not be consistent with Secretary of Defense memorandum dated October 13, 2011, ''Improving Financial Information and Achieving Audit Readiness,'' which emphasizes both asset accountability and the need to accelerate key elements of DoD's audit readiness plans.

DoD agrees that, as reflected in the proposed rules and final rule, DFARS part 211 is the appropriate place for including DoD policy for reporting Government-furnished property required to be recorded in the IUID registry because item identification and valuation, addressed at DFARS subpart 211.2, are considered to be elements of the specifications, or requirements, for a contract.

2. Reporting Threshold of $5,000

Comment: The respondent strongly proposed to revise the overall policy for reporting of Government-furnished property, at DFARS 211.274–4(a), in order to retain the $5,000 reporting threshold and ''remain consistent with internal or DoD guidance DODI 5000.64.''

Response: The final rule is consistent with the current DoD Instruction 5000.64, which requires accountability of all Government furnished property regardless of dollar value.

3. Items To Be Reported Above the $5,000 Threshold

Comment: The second proposed rule, at DFARS 211.274–4(b), listed types of property that would not be reported, such as ''property under any statutory leasing authority.'' The respondent proposed, instead, to list at paragraph (b) items, ''if significant or material in nature,'' that ''shall be considered for'' reporting, *e.g.,* DoD Capital Equipment; and Special Tooling, Special Test Equipment, and Equipment. The respondent stated that its approach would increase reporting visibility for DoD. In addition, the respondent claimed that ''providing (special tooling) is in concert with the spirit of the 'Duncan Hunter National Defense Acquisition Act of FY 2009 * * * Section 815.' '' The respondent suggested that the Act's purpose would be served by revising DFARS 252.211–7007(b) to add a table to identify the specific items to be reported to the IUID Registry.

Response: The disclaimer ''if significant or material in nature'' would create unnecessary ambiguity, possibly resulting in calls for ''more consistency.'' In addition, DoD has not identified a nexus to section 815 of the National Defense Authorization Act for Fiscal Year 2009; the referenced provision refers to the preservation and storage of unique tooling, not whether to furnish special tooling to a contractor under a Government contract. The respondent's suggestion to add a table to paragraph (b) to identify the specific items to be reported to the IUID Registry would largely duplicate the Government-furnished property listing required by FAR 45.201.

4. Remove Coverage of Contractor-Acquired Property From Procedures, Guidance and Information (PGI) and Add It to the DFARS Text

Comment: The respondent objected to the portion of the clause prescription proposed at DFARS 211.274–6 that, at (a)(1)(ii), addressed ''cost-reimbursement contracts that may result in the delivery of contractor-acquired property (see requirements at PGI 245.402–71).'' The respondent commented that PGI references should not be contained in regulations. ''They (PGI language) are not controlled, nor vetted with the public as required by FAR Part 1.103(b),'' in the respondent's estimation. The respondent stated that ''PGI is unreliable for regulatory purposes. It provides the PGI writers a form of a blank check.''

Response: The language at DFARS 211.274–6 has become obsolete with publication of this final rule and, therefore, is removed. However, regarding references to the PGI in the DFARS regulation, the PGI is a companion resource to the DFARS containing both mandatory and non-mandatory internal procedures, guidance, and supplemental information for Government contracting personnel. While the PGI is non-regulatory, PGI changes are internally coordinated in the same fashion as DFARS proposals, *i.e.,* at the DAR Council level and coordinated with other DoD stakeholders. All PGI changes are vetted to ensure accuracy and reliability of content.

5. The Clause at DFARS 252.211–7007, Reporting of Government-Furnished Property, Should Not Include in Paragraph (a) Definitions of Terms That Are Defined Elsewhere

Comment: The respondent quoted FAR 1.304(b)(1) to the effect that material should not be unnecessarily repeated, paraphrased, or restated if it is contained in the FAR or higher-level agency regulations.

Response: FAR 52.202–1, Definitions, states that, ''(w)hen a solicitation provision or contract clause uses a word or term that is defined in the Federal Acquisition Regulation (FAR), the word or term has the same meaning as the definition in FAR 2.101 in effect at the time the solicitation was issued, unless * * * the solicitation, or amended solicitation, provides a different definition * * * (or) the part, subpart, or section of the FAR where the provision or clause is prescribed provides a different meaning * * *'' Although the respondent did not specify which definitions were at issue, DoD has reviewed each definition and removed definitions that are not significant to the interpretation of the clause or needed for increased clarity.

6. Requirement To Report Material at the Transaction Level

Comment: The respondent interpreted the exception to IUID reporting for material released for work in process, at DFARS 252.211–7007(c), to require reporting of material at the transactional level. The respondent objected to the latter, stating that it ''is not practical and would be extremely expensive for contractors and the Government.'' The respondent stated that ''(t)here is no harm to the Government in that furnished material is only for a given contract for a given amount—and is not expected to be available for other uses.''

Response: The DFARS rule requires transactional reporting only for the receipt of material. Changes of ''state'' for material released to the floor as work-in-process are not required to be reported.

7. Issues Regarding the IUID Registry

Comment: The respondent raised several issues regarding the clause at

DFARS 252.211–7007, entitled ''Reporting of Government-Furnished Property.'' Citing paragraph (d) of the clause, entitled ''Data for reporting to the IUID Registry,'' the respondent stated that the proposed rule would include items that had been reported previously to the IUID registry. According to the respondent, the rule should address items that were reported as non-UII items that have changed to serially managed items. The respondent requested that the intent of paragraph (d) be made clear.

The respondent also raised issues regarding paragraph (e) of the clause, entitled ''Procedures for establishing Unique Item Identifiers,'' stating that there is ''great efficiency in continuing the usage of virtual Unique Item Identifiers as Special Tooling and Special Test Equipment Unique Item Identifiers with concatenated CAGE plus Property Tag.''

Also citing paragraph (e) of the clause, the respondent proposed the deletion of item (5), the ''mark record'' data element. The respondent stated that the enabling of the contractor's reporting system to ''pull data'' to populate the mark record requirements should be sufficient. The respondent proposed to delete all the sub-elements under ''(5) Mark record'' because this is already a reportable event and is defined in paragraph (f) of the clause. Further, the respondent proposed deletion because its position is that material reporting should not be required.

Response: DoD did not make the requested changes because they would not contribute to the desired outcome, i.e., consistent accountability for Government property in the possession of contractors. To the extent items were previously reported, reporting would consist largely of only changes in status or disposition. The language referring to ''(5) mark record'' was not deleted because it is integral to reporting.

8. Retain Current Government Systems

Comment: The respondent objected to the proposed DFARS 252.211–7007(g) because it is predicated on the eventual demise of other, existing property management systems. The respondent specifically recommended that the Government retain, and leverage, all current Government systems.

Response: This final rule, and previous rules for Government-furnished property, leverage the use of DoD enterprise systems (standard systems used throughout the DoD enterprise and called out in regulation). These systems include Wide-Area WorkFlow, the DoD IUID Registry, Electronic Document Access, and the Defense Contract Management Agency managed electronic tools: Plant Clearance Automated Reutilization and Screening System, and property Lost, Theft, Damaged, and Destroyed reporting system. While this final rule does not propose to eliminate any specific DoD system at this time, it is a step toward the elimination of disparate means of GFP reporting. This final rule supports DoD's plans for audit readiness and asset accountability, which will result in some systems coming under greater scrutiny in the near future.

III. Executive Orders 12866 and 13563

Executive Orders (E.O.s) 12866 and 13563 direct agencies to assess all costs and benefits of available regulatory alternatives and, if regulation is necessary, to select regulatory approaches that maximize net benefits (including potential economic, environmental, public health and safety effects, distributive impacts, and equity). E.O. 13563 emphasizes the importance of quantifying both costs and benefits, of reducing costs, of harmonizing rules, and of promoting flexibility. This is not a significant regulatory action and, therefore, was not subject to review under section 6(b) of E.O. 12866, Regulatory Planning and Review, dated September 30, 1993. This rule is not a major rule under 5 U.S.C. 804.

IV. Regulatory Flexibility Act

A final regulatory flexibility analysis has been prepared consistent with the Regulatory Flexibility Act, 5 U.S.C. 601, *et seq.,* and is summarized as follows:

This final rule revises and standardizes reporting requirements for Government-furnished property to include items uniquely and non-uniquely identified and clarify policy for contractor access to Government supply sources. The clause at 252.211–7007 is significantly revised to eliminate the reported material weakness for DoD with regard to accounting for its property in the hands of contractors.

A number of issues were raised by the single respondent submitting comments in response to the second proposed rule. These resulted in some minor changes to clarify the rule. No comments were submitted by the Chief Counsel for Advocacy of the Small Business Administration.

The Defense Contract Management Agency, which has the overall responsibility for managing Government-furnished property, estimates that approximately 4,400 contractors possess Government-furnished property and, of this total, approximately one-fourth, or 1,100 contractors, are small businesses. All contractors in possession of Government property will be equally affected by the revision in reporting rules.

This rule will remove the mandatory $5,000 unit acquisition cost dollar threshold for reporting. This will not significantly impact items valued at less than $5,000 in unit acquisition cost, as they were also previously required to be reported if they were serially managed, mission essential, sensitive, or controlled inventory. There is potential for eventual elimination of some other electronic reporting tools, such as DoD's Commercial Asset Visibility (CAV) system. There are presently over 900 separate applications of CAV, all of which can be eliminated given the new reporting constructs contained within this rule. This will result in greater efficiency and considerable cost savings to both Government and industry.

All DoD contractors with Government-furnished property will be equally affected. However, DoD's Item Unique Identification (IUID) Registry is already in use by contractors with Government-furnished property. Under this final rule, DoD contractors will continue to use the IUID Registry for property reporting, but they will report somewhat different classes of property than they had been, and DoD will phase out the use of other property management systems.

DoD is responsible for entering new items in the IUID Registry, and contractors will be responsible only for reporting a change in state of the item. In the associated information collection justification, DoD estimated that the data are entered by the equivalent of a GS–11, step 5, that there will be approximately 5 responses annually per contractor, and that each response will take approximately one hour.

These changes were necessitated by the requirement for DoD to establish and maintain proper accountability for its property. The approach selected is designed to provide a single, electronic property management system and eliminate the many overlapping and parallel accountability systems currently in use. The result should be less costly for the DoD and its contractors, including small entities, while providing enhanced accountability.

V. Paperwork Reduction Act

This rule affects the information collection requirements in Government property reporting provisions prescribed at DFARS part 211, currently approved under OMB Control Number 0704–0246 (which covers DFARS part 245, Government Property, DFARS section

211.274, Reporting of Government-Furnished Equipment in the DoD Item Unique Identification (IUID) Registry, the related clauses at DFARS 252.245–7000 through –7004 and 252.211–7007, and the related forms) in the amount of 53,560 hours, in accordance with the Paperwork Reduction Act (44 U.S.C. chapter 35). The impact of this rule, however, is negligible, because the requirements of the final rule are not expected to significantly increase the overall burden hours approved under clearance number 0704–0246.

List of Subjects in 48 CFR Parts 211, 212, and 252

Government procurement.

Manuel Quinones,

Editor, Defense Acquisition Regulations System.

Therefore, 48 CFR parts 211, 212, and 252 are amended as follows:

PART 211—DESCRIBING AGENCY NEEDS

■ 1. The authority citation for 48 CFR part 211 is revised to read as follows:

Authority: 41 U.S.C. 1303 and 48 CFR Chapter 1.

■ 2. Section 211.274–2 is amended to read as follows—

■ a. By removing, in paragraph (b)(2), the phrase ''FAR Part 12 or Part 8'' and adding in its place ''FAR part 12 or part 8'';

■ b. By revising paragraph (b)(2)(ii) to read as follows:

211.274–2 Policy for unique item identification.

* * * * *

(b) * * *

(2) * * *

(ii) The DoD Unique Identification Policy Office must receive a copy of the determination and findings required by paragraph (b)(2)(i) of this subsection. Follow the procedures at PGI 211.274–2.

■ 3. Section 211.274–4 is revised to read as follows:

211.274–4 Policy for reporting of Government-furnished property.

(a) It is DoD policy that all Government-furnished property be recorded in the DoD Item Unique Identification (IUID) Registry, as defined in the clause at 252.211–7007, Reporting of Government-Furnished Property.

(b) The following items are not required to be reported:

(1) Contractor-acquired property, as defined in FAR part 45.

(2) Property under any statutory leasing authority.

(3) Property to which the Government has acquired a lien or title solely because of partial, advance, progress, or performance-based payments.

(4) Intellectual property or software.

(5) Real property.

(6) Property released as work in process.

(7) Non-serial managed items (reporting is limited to receipt transactions only).

■ 4. Section 211.274–6 is amended by—

■ a. Revising paragraph (a)(1);

■ c. Revising paragraph (b).

The revisions read as follows:

211.274–6 Contract clauses.

(a)(1) Use the clause at *252.211–7003*, Item Identification and Valuation, in solicitations and contracts that require item identification or valuation, or both, in accordance with *211.274–2* and *211.274–3.*

* * * * *

(b) Use the clause at *252.211–7007*, Reporting of Government-Furnished Property, in solicitations and contracts that contain the clause at FAR 52.245–1, Government Property.

* * * * *

■ 5. The authority citation for 48 CFR part 212 and 252 continues to read as follows:

Authority: 41 U.S.C. 1303 and 48 CFR chapter 1.

PART 212—ACQUISITION OF COMMERCIAL ITEMS

■ 6. Amend section 212.301 by—

■ a. Redesignating paragraphs (f)(iv)(F) through (Q) as paragraphs (G) through (R); and

■ b. Adding new paragraph (f)(iv)(F) to read as follows:

212.301 Solicitation provisions and contract clauses for the acquisition of commercial items.

* * * * *

(F) Use the clause at 252.211–7007, Reporting of Government-Furnished Property, as prescribed in 211.274–6.

* * * * *

PART 252—SOLICITATION PROVISIONS AND CONTRACT CLAUSES

■ 7. Section 252.211–7007 is revised to read as follows:

252.211–7007 Reporting of Government-Furnished Property.

As prescribed in *211.274–6(b)*, use the following clause:

REPORTING OF GOVERNMENT-FURNISHED PROPERTY (AUG 2012)

(a) *Definitions.* As used in this clause—

''Commercial and Government entity (CAGE) code'' means—

(i) A code assigned by the Defense Logistics Agency Logistics Information Service to identify a commercial or Government entity; or

(ii) A code assigned by a member of the North Atlantic Treaty Organization that the Defense Logistics Agency Logistics Information Service records and maintains in the CAGE master file. The type of code is known as an ''NCAGE code.''

''Contractor-acquired property'' has the meaning given in FAR clause 52.245–1. Upon acceptance by the Government, contractor-acquired property becomes Government-furnished property.

''Government-furnished property'' has the meaning given in FAR clause 52.245–1.

''Item unique identification (IUID)'' means a system of assigning, reporting, and marking DoD property with unique item identifiers that have machine-readable data elements to distinguish an item from all other like and unlike items.

''IUID Registry'' means the DoD data repository that receives input from both industry and Government sources and provides storage of, and access to, data that identifies and describes tangible Government personal property. The IUID Registry is—

(i) The authoritative source of Government unit acquisition cost for items with unique item identification (see DFARS 252.211–7003) that were acquired after January 1, 2004;

(ii) The master data source for Government-furnished property; and

(iii) An authoritative source for establishing the acquisition cost of end-item equipment.

''National stock number (NSN)'' means a 13-digit stock number used to identify items of supply. It consists of a four-digit Federal Supply Code and a nine-digit National Item Identification Number.

''Nomenclature'' means—

(i) The combination of a Government-assigned type designation and an approved item name;

(ii) Names assigned to kinds and groups of products; or

(iii) Formal designations assigned to products by customer or supplier (such as model number or model type, design differentiation, or specific design series or configuration).

''Part or identifying number (PIN)'' means the identifier assigned by the original design activity, or by the controlling nationally recognized standard, that uniquely identifies (relative to that design activity) a specific item.

''Reparable'' means an item, typically in unserviceable condition, furnished to the Contractor for maintenance, repair, modification, or overhaul.

''Serially managed item'' means an item designated by DoD to be uniquely tracked, controlled, or managed in maintenance, repair, and/or supply systems by means of its serial number.

''Supply condition code'' means a classification of materiel in terms of readiness for issue and use or to identify action underway to change the status of

materiel (see *http://www.dtic.mil/whs/directives/corres/pdf/400025m.pdf*).

''Unique item identifier (UII)'' means a set of data elements permanently marked on an item that is globally unique and unambiguous and never changes, in order to provide traceability of the item throughout its total life cycle. The term includes a concatenated UII or a DoD recognized unique identification equivalent.

''Unit acquisition cost'' has the meaning given in FAR clause 52.245–1.

(b) *Reporting Government-furnished property to the IUID Registry.* Except as provided in paragraph (c) of this clause, the Contractor shall report, in accordance with paragraph (f), Government-furnished property to the IUID Registry as follows:—

(1) Up to and including December 31, 2013, report serially managed Government-furnished property with a unit-acquisition cost of $5,000 or greater.

(2) Beginning January 1, 2014, report—

(i) All serially managed Government-furnished property, regardless of unit-acquisition cost; and

(ii) Contractor receipt of non-serially managed items. Unless tracked as an individual item, the Contractor shall report non-serially managed items to the Registry in the same unit of packaging, e.g., original manufacturer's package, box, or container, as it was received.

(c) *Exceptions.* Paragraph (b) of this clause does not apply to—

(1) Contractor-acquired property;

(2) Property under any statutory leasing authority;

(3) Property to which the Government has acquired a lien or title solely because of partial, advance, progress, or performance-based payments;

(4) Intellectual property or software;

(5) Real property; or

(6) Property released for work in process.

(d) *Data for reporting to the IUID Registry.* To permit reporting of Government-furnished property to the IUID Registry, the Contractor's property management system shall enable the following data elements in addition to those required by paragraph (f)(1)(iii)(A)(1) through (3), (5), (7), (8), and (10) of the Government Property clause of this contract (FAR 52.245–1):

(1) Received/Sent (shipped) date.

(2) Status code.

(3) Accountable Government contract number.

(4) Commercial and Government Entity (CAGE) code on the accountable Government contract.

(5) Mark record.

(i) Bagged or tagged code (for items too small to individually tag or mark).

(ii) Contents (the type of information recorded on the item, e.g., item internal control number).

(iii) Effective date (date the mark is applied).

(iv) Added or removed code/flag.

(v) Marker code (designates which code is used in the marker identifier, e.g., D=CAGE, UN=DUNS, LD=DODAAC).

(vi) Marker identifier, e.g., Contractor's CAGE code or DUNS number.

(vii) Medium code; how the data is recorded, e.g., barcode, contact memory button.

(viii) Value, e.g., actual text or data string that is recorded in its human-readable form.

(ix) Set (used to group marks when multiple sets exist.

(6) Appropriate supply condition code, required only for reporting of reparables, per Appendix 2 of DoD 4000.25–2–M, Military Standard Transaction Reporting and Accounting Procedures manual (*http://www.dtic.mil/whs/directives/corres/pdf/400025m.pdf*).

(e) When Government-furnished property is in the possession of subcontractors, Contractors shall ensure that reporting is accomplished using the data elements required in paragraph (d) of this clause.

(f) *Procedures for reporting of Government-furnished property.* Except as provided in paragraph (c) of this clause, the Contractor shall establish and report to the IUID Registry the information required by FAR clause 52.245–1, paragraphs (e) and (f)(1)(iii), in accordance with the data submission procedures at *http://www.acq.osd.mil/dpap/pdi/uid/data_submission_information.html.*

(g) *Procedures for updating the IUID Registry.*

(1) Except as provided in paragraph (g)(2), the Contractor shall update the IUID Registry at *https:///bpn.gov/iuid* for changes in status, mark, custody, condition code (for reparables only), or disposition of items that are—

(i) Received by the Contractor;

(ii) Delivered or shipped from the Contractor's plant, under Government instructions, except when shipment is to a subcontractor or other location of the Contractor;

(iii) Consumed or expended, reasonably and properly, or otherwise accounted for, in the performance of the contract as determined by the Government property administrator, including reasonable inventory adjustments;

(iv) Disposed of; or

(v) Transferred to a follow-on or other contract.

(2) The Contractor need not report to the IUID Registry those transactions reported or to be reported to the following DCMA etools:

(i) Plant Clearance Automated Reutilization and Screening System (PCARSS); or

(ii) Lost, Theft, Damaged or Destroyed (LTDD) system.

(3) The contractor shall update the IUID Registry as transactions occur or as otherwise stated in the Contractor's property management procedure.

(End of clause)

■ 8. Section 252.251–7000 is amended by—

■ a. Amending the clause date by removing ''(NOV 2004)'' and adding in its place ''(AUG 2012)'';

■ b. Revising paragraph (c) introductory text;

■ c. Redesignating paragraphs (d) and (e) as paragraphs (e) and (f); and

■ d. Adding a new paragraph (d).

The revisions and additions read as follows:

252.251–7000 Ordering From Government Supply Sources.

* * * * *

(c) When placing orders for Government stock on a reimbursable basis, the Contractor shall—

* * * * *

(d) When placing orders for Government stock on a non-reimbursable basis, the Contractor shall—

(1) Comply with the requirements of the Contracting Officer's authorization; and

(2) When using electronic transactions to submit requisitions on a non-reimbursable basis only, place orders by authorizing contract number using the Defense Logistics Management System (DLMS) Supplement to Federal Implementation Convention 511R, Requisition; and acknowledge receipts by authorizing contract number using the DLMS Supplement 527R, Receipt, Inquiry, Response and Material Receipt Acknowledgement.

* * * * *

[FR Doc. 2012–21059 Filed 8–28–12; 8:45 am]

BILLING CODE 5001–06–P

DEPARTMENT OF DEFENSE

Defense Acquisition Regulations System

48 CFR Part 242

RIN 0750–AH52

Defense Federal Acquisition Regulation Supplement; DoD Voucher Processing (DFARS Case 2011–D054)

AGENCY: Defense Acquisition Regulations System, Department of Defense (DoD).

ACTION: Final rule.

SUMMARY: DoD is amending the Defense Federal Acquisition Regulation Supplement (DFARS) to update DoD's voucher processing procedures and better accommodate the Wide Area WorkFlow (WAWF) used to process vouchers.

DATES: August 29, 2012.

FOR FURTHER INFORMATION CONTACT: Mr. Mark Gomersall, 571–372–6099.

SUPPLEMENTARY INFORMATION:

I. Background

DoD published a proposed rule in the **Federal Register** at 77 FR 2682 on January 19, 2012. The comment period closed on March 19, 2012. This rule revises requirements for approving interim vouchers and replaces the direct submission process currently referenced

at DFARS 242.803(b)(i)(C) with a risk-based sampling process. Interim vouchers that are selected using sampling methodologies will be reviewed and approved by the contract auditors for provisional payment and sent to the disbursing office after a pre-payment review. Interim vouchers not selected for a pre-payment review will be considered to be provisionally approved and will be sent directly to the disbursing office. All provisionally approved interim vouchers are subject to a later audit of actual costs incurred.

II. Discussion and Analysis

One respondent submitted a comment requesting a clarification to the proposed language at 242.803(b)(i)(A). The respondent suggested that the proposed language could be interpreted to indicate that a contract auditor is authorized to receive vouchers from contractors, but only may approve them when directed by the terms of the contract. The final rule language at 242.803(b)(i)(A) has been revised to state that the contract auditor is the authorized representative of the contracting officer for receiving vouchers from contractors electronically, unless otherwise directed by the terms of the contract.

III. Executive Orders 12866 and 13563

Executive Orders (E.O.s) 12866 and 13563 direct agencies to assess all costs and benefits of available regulatory alternatives and, if regulation is necessary, to select regulatory approaches that maximize net benefits (including potential economic, environmental, public health and safety effects, distributive impacts, and equity). E.O. 13563 emphasizes the importance of quantifying both costs and benefits, of reducing costs, of harmonizing rules, and of promoting flexibility. This is not a significant regulatory action and, therefore, was not subject to review under section 6(b) of E.O. 12866, Regulatory Planning and Review, dated September 30, 1993. This rule is not a major rule under 5 U.S.C. 804.

IV. Regulatory Flexibility Act

DoD does not expect this rule to have a significant economic impact on a substantial number of small entities within the meaning of the Regulatory Flexibility Act, 5 U.S.C. 601, et seq., because this rule merely updates DoD's voucher processing procedures and better accommodates the Wide Area WorkFlow used to process vouchers. However, a final regulatory flexibility analysis has been performed consistent with 5 U.S.C. 604. This rule revises requirements for approving interim vouchers. Interim vouchers that are selected using sampling methodologies will be reviewed and approved by the contract auditors for provisional payment, and sent to the disbursing office after a pre-payment review. Interim vouchers not selected for a pre-payment review will be considered to be provisionally approved and will be sent directly to the disbursing office. All provisionally approved interim vouchers are subject to a later audit of actual costs incurred. No significant issues were raised by the public comments in response to the initial regulatory flexibility analysis and no comments were filed by the Chief Counsel for Advocacy of the Small Business Administration in response to the rule. The proposed rule imposes no reporting, recordkeeping, or other information collection requirements and no known significant alternatives to the rule were identified.

V. Paperwork Reduction Act

The rule does not contain any information collection requirements that require the approval of the Office of Management and Budget under the Paperwork Reduction Act (44 U.S.C. chapter 35).

List of Subjects in 48 CFR Part 242

Government procurement.

Manuel Quinones,

Editor, Defense Acquisition Regulations System.

Therefore 48 CFR part 242 is amended as follows:

PART 242—CONTRACT ADMINISTRATION AND AUDIT SERVICES

■ 1. The authority citation for 48 CFR part 242 continues to read as follows:

Authority: 41 U.S.C. 1303 and 48 CFR chapter 1.

■ 2. Section 242.803(b)(i) is revised to read as follows:

242.803 Disallowing costs after incurrence.

* * * * *

(b) * * *

(i) The contract auditor is the authorized representative of the contracting officer for—

(A) Receiving vouchers from contractors electronically or by other delivery methods as directed by the terms of the contract;

(B) Approving interim vouchers that were selected using sampling methodologies for provisional payment and sending them to the disbursing office after a pre-payment review. Interim vouchers not selected for a pre-payment review will be considered to be provisionally approved and will be sent directly to the disbursing office. All provisionally approved interim vouchers are subject to a later audit of actual costs incurred;

(C) Reviewing completion/final vouchers and sending them to the administrative contracting officer; and

(D) Issuing DCAA Forms 1, Notice of Contract Costs Suspended and/or Disapproved, to deduct costs where allowability is questionable.

* * * * *

[FR Doc. 2012–21057 Filed 8–28–12; 8:45 am]

BILLING CODE 5001–06–P

DEPARTMENT OF COMMERCE

National Oceanic and Atmospheric Administration

50 CFR Parts 300 and 635

[Docket No. 120510051–2335–02]

RIN 0648–BC16

Atlantic Highly Migratory Species; Lifting Trade Restrictive Measures

AGENCY: National Marine Fisheries Service (NMFS), National Oceanic and Atmospheric Administration (NOAA), Commerce.

ACTION: Final rule.

SUMMARY: This final rule lifts the trade restrictions on importing bigeye tuna from Bolivia and Georgia to implement a recommendation adopted at the 2011 meeting of the International Commission for the Conservation of Atlantic Tunas (ICCAT). Additionally, this rule changes the regulations containing species-specific harmonized tariff codes to be consistent with recent changes adopted by the U.S. International Trade Commission (ITC).

DATES: Effective September 28, 2012.

FOR FURTHER INFORMATION CONTACT: Tom Warren at 978–281–9260.

SUPPLEMENTARY INFORMATION: The U.S. Atlantic tuna fisheries are managed under the 2006 Consolidated Highly Migratory Species Fishery Management Plan and regulations at 50 CFR part 635, pursuant to the authority of the Magnuson-Stevens Fishery Conservation and Management Act (Magnuson-Stevens Act), and the Atlantic Tunas Convention Act (ATCA). Under ATCA, the Secretary shall promulgate such regulations as may be necessary and appropriate to carry out ICCAT Recommendations.

Trade Measures

In 2002 and 2003, ICCAT adopted binding measures for Parties to prohibit imports of Atlantic bigeye tuna and its products from Bolivia and Georgia. Specifically, Recommendations 02–17 and 03–18 prohibited the imports to address illegal, unreported, and unregulated catches of tuna (especially bigeye tuna) by large-scale Bolivian and Georgian longline vessels respectively, because they operated in a manner that diminished the effectiveness of ICCAT measures. Recommendation 02–17 expressed concern regarding the overfished status of bigeye tuna in the Atlantic Ocean and noted ICCAT had reviewed information that Bolivian vessels fishing for Atlantic bigeye tuna had continued to operate in a manner that diminished the effectiveness of ICCAT conservation and management measures. Similarly, Recommendation 03–18 expressed concern regarding the overfished status of bigeye tuna in the Atlantic Ocean and stated that Georgian vessels had continued to operate in a manner that diminished the effectiveness of ICCAT conservation and management measures. In 2004, NMFS published a final rule (69 FR 70396; December 6, 2004) that implemented these ICCAT recommendations. When the import prohibitions were implemented in the 2004 final rule, neither Bolivia nor Georgia had exported Atlantic bigeye tuna to the United States in the previous 10 years; therefore, NMFS determined that the import prohibitions would have no socioeconomic impact on fishery participants.

At its 2011 annual meeting, ICCAT examined recent actions of Bolivia and Georgia, and determined that the actions of their vessels no longer diminish the effectiveness of ICCAT's conservation and management measures. Some of the relevant considerations were as follows: (1) Bolivia and Georgia have been responsive to ICCAT requests for information on actions taken to control their vessels; (2) Since 2006, Bolivia has not registered any fishing vessels to carry out fishing-related activities in the Convention area, and information available to ICCAT has indicated that Bolivia has not fished for ICCAT species in recent years; and (3) Georgia has recently taken action to de-register those of its vessels fishing without authorization in the Convention area and has considered increased participation in the work of ICCAT.

Thus, ICCAT adopted Recommendation 11–19, which requires Parties to lift import prohibitions on Atlantic bigeye tuna from Bolivia and Georgia as soon as possible in accordance with domestic procedures. Therefore, on June 26, 2012, NMFS published a proposed rule to remove the Atlantic bigeye tuna import prohibitions from Bolivia and Georgia (77 FR 38030), and provided a 30-day public comment period, which ended July 26, 2012. Because there were no imports of Atlantic bigeye tuna from these countries prior to the implementation of the prohibitions, and because NMFS does not expect imports in the future, NMFS does not expect that lifting the prohibitions will result in socioeconomic impacts on U.S. traders.

Consistent with the regulations at 50 CFR § 635.40(c), for one year after the date of filing of the final rule lifting the import restrictions, every shipment that previously was subject to the import restrictions will continue to be denied entry unless the shipment is accompanied by a certification executed by an authorized official of the country of export and authenticated by a consular officer or consular agent of the United States certifying that no portion of the shipment is composed of fish taken prior to or during the import restriction.

Harmonized Tariff Codes

The June 26, 2012, proposed rule also included administrative changes in support of the International Trade Permit program. Importers, exporters and re-exporters of Atlantic, Pacific, and Southern bluefin tuna, swordfish, frozen bigeye tuna, and shark fins must obtain an International Trade Permit consistent with regulations at 50 CFR 300, subpart M. Permit holders must include the species-specific harmonized tariff codes on the necessary trade documentation when trading these species. The Harmonized System is an international product nomenclature system developed by the World Customs Organization. It is updated every 5 years, and the most recent update occurred in 2012, with subsequent modifications to the Harmonized Tariff Schedule of the United States. Thus, the section of the regulations that include harmonized tariff codes for highly migratory species products located at 50 CFR 300.184 is being changed accordingly. These changes are not expected to have economic impacts and are necessary to maintain consistency with current trade regulations and to ensure that permit holders have the most recent information in order to simplify compliance with the regulations. The Harmonized Tariff Schedule (HTS) of the United States is published by the ITC. The chapter pertaining to fish, including Highly Migratory Species (HMS), is available at the following Web site: *http://www.usitc.gov/publications/docs/tata/hts/bychapter/1202C03.pdf*.

Responses to Public Comments

NMFS received two written comments on the proposed rule during the public comment period.

Comment 1: The commenter opposed the regulatory changes, and suggested that Bolivia and Georgia ''keep their fish''.

Response: If importers determine it is feasible and economically beneficial to import bigeye tuna from Bolivia or Georgia, they are now legally free to do so consistent with a binding decision made at the relevant international regional fishery management organization (ICCAT). That said, NMFS does not anticipate any imports as a result of this change.

Comment 2: The commenter noted that the regulations containing excerpts of the Harmonized Tariff Schedule (for HMS) exclude fresh bigeye tuna and yellowfin tuna and suggested that NMFS investigate the issue due to concerns about illegal, unregulated, and unreported (IUU) fishing and trade in these species.

Response: The commenter stated that the regulations contain ''excerpts of the Harmonized Tariff Schedule.'' To clarify, the regulations will no longer ''excerpt'' the Harmonized Tariff Schedule. Instead, the revised regulations will simply list the fish and fish products that are subject to reporting requirements. The commenter notes that fresh bigeye tuna and yellowfin tuna are not among the species subject to the reporting requirements. NMFS includes on the list at § 300.184 those species that are subject to trade tracking and documentation requirements by one or more regional fishery management organizations (RFMO), including ICCAT. Yellowfin and fresh bigeye tuna currently are not the subject of such reporting requirements and thus are not on the list of species. NMFS will continue to consider this issue as part of international discussions on IUU fishing and in conjunction with future requests to the ITC, to help determine whether additional tracking measures and attendant additional HTS codes are needed in the future.

Classification

Pursuant to section 304 (b)(1)(A) of the Magnuson-Stevens Act, the NMFS Assistant Administrator has determined that this final rule is necessary for the conservation and management of the Atlantic highly migratory species

fishery, and is consistent with the 2006 Consolidated HMS FMP, other provisions of the Magnuson-Stevens Act, and other applicable law.

This rule has been determined to be not significant for purposes of Executive Order 12866.

The Chief Council for Regulation of the Department of Commerce certified to the Chief Council for Advocacy of the Small Business Administration at the proposed rule stage that this rule, if adopted, would not have a significant economic impact on a substantial number of small entities. None of the public comments submitted to NMFS addressed the certification, and no new information has become available that would change this determination. As a result, a final regulatory flexibility analysis is not required and none has been prepared.

List of Subjects

50 CFR Part 300

Antarctica, Canada, Exports, Fish, Fisheries, Fishing, Imports, Indians, Labeling, Marine resources, Reporting and recordkeeping requirements, Russian Federation, Transportation, Treaties, Wildlife.

50 CFR Part 635

Fisheries, Fishing, Fishing vessels, Foreign relations, Imports, Penalties, Reporting and recordkeeping requirements, Treaties.

Dated: August 23, 2012.

Alan D. Risenhoover,

Director, Office of Sustainable Fisheries, performing the functions and duties of the Deputy Assistant Administrator for Regulatory Programs, National Marine Fisheries Service.

For the reasons set out in the preamble, 50 CFR parts 300 and 635 are amended as follows:

PART 300—INTERNATIONAL FISHERIES REGULATIONS

■ 1. The authority citation for part 300 continues to read as follows:

Authority: 16 U.S.C. 951–961 and 971 *et seq.*; 16 U.S.C. 1801 *et seq.*

■ 2. Section 300.184 is revised to read as follows:

§ 300.184 Species subject to permitting, documentation, reporting, and recordkeeping requirements.

(a) Except as noted at (b), the following fish or fish products are subject to the requirements of this subpart, regardless of ocean area of catch, and must be accompanied by the appropriate heading or subheading numbers from the Harmonized Tariff Schedule of the United States (HTS).

(1) Bluefin tuna,
(2) Southern bluefin tuna,
(3) Frozen bigeye tuna,
(4) Swordfish, and
(5) Shark fins.

(b) For bluefin tuna, southern bluefin tuna, frozen bigeye tuna, and swordfish, fish parts other than meat (e.g., heads, eyes, roe, guts, and tails) may be imported without documentation.

PART 635–ATLANTIC HIGHLY MIGRATORY SPECIES

■ 3. The authority citation for part 635 continues to read as follows:

Authority: 16 U.S.C. 971 *et seq.;* 16 U.S.C. 1801 *et seq.*

§ 635.41 [Amended]

■ 4. In § 635.41, remove and reserve paragraph (a).

[FR Doc. 2012–21318 Filed 8–28–12; 8:45 am]

BILLING CODE 3510–22–P

DEPARTMENT OF COMMERCE

National Oceanic and Atmospheric Administration

50 CFR Part 622

[Docket No. 120309176–2075–02]

RIN 0648–XC133

Fisheries of the Caribbean, Gulf of Mexico, and South Atlantic; South Atlantic Snapper-Grouper Fishery; 2012–2013 Accountability Measure and Closure for Recreational Black Sea Bass in the South Atlantic

AGENCY: National Marine Fisheries Service (NMFS), National Oceanic and Atmospheric Administration (NOAA), Commerce.

ACTION: Temporary rule; closure.

SUMMARY: NMFS implements an accountability measure (AM) for the black sea bass recreational sector in the South Atlantic for the 2012–2013 fishing year through this temporary final rule. NMFS has determined that the annual catch limit (ACL) for the black sea bass recreational sector has been reached. Therefore, NMFS closes the recreational sector of black sea bass in the portion of the exclusive economic zone (EEZ) of the South Atlantic through 35°15.19′ N. lat., the latitude of Cape Hatteras Light, North Carolina. This closure is necessary to protect the black sea bass resource.

DATES: This rule is effective 12:01 a.m., local time, September 4, 2012, through May 31, 2013.

FOR FURTHER INFORMATION CONTACT: Catherine Hayslip, telephone: 727–824–5305, or email: *Catherine.Hayslip@noaa.gov.*

SUPPLEMENTARY INFORMATION: The snapper-grouper fishery of the South Atlantic is managed under the Fishery Management Plan for the Snapper-Grouper Fishery of the South Atlantic Region (FMP). The FMP includes black sea bass, and it was prepared by the South Atlantic Fishery Management Council (Council) and is implemented under the authority of the Magnuson-Stevens Fishery Conservation and Management Act (Magnuson-Stevens Act) by regulations at 50 CFR part 622.

Background

Black sea bass are managed throughout their range. In the South Atlantic EEZ, black sea bass are managed under the FMP by the Council from 35°15.19′ N. lat., the latitude of Cape Hatteras Light, North Carolina, south to the boundary between the South Atlantic and Gulf of Mexico (Gulf) Councils, off of Key West, Florida. The boundary between the South Atlantic and Gulf Councils coincides with the line of demarcation between the Atlantic Ocean and the Gulf, which begins at the intersection of the outer boundary of the EEZ, as specified in the Magnuson-Stevens Act, and 83°00′ W. long., proceeds northward along that meridian to 24°35′ N. lat., (near the Dry Tortugas Islands), thence eastward along that parallel, through Rebecca Shoal and the Quicksand Shoal, to the Marquesas Keys, and then through the Florida Keys to the mainland at the eastern end of Florida Bay, the line so running that the narrow waters within the Dry Tortugas Islands, the Marquesas Keys and the Florida Keys, and between the Florida Keys and the mainland, are within the Gulf. From Cape Hatteras Light, North Carolina, through Maine, black sea bass are managed jointly by the Mid-Atlantic Fishery Management Council and the Atlantic States Marine Fisheries Commission. Therefore, the closure provisions contained in this notice are applicable to those vessels harvesting or possessing black sea bass from Cape Hatteras Light, North Carolina, through to the boundary between the South Atlantic and Gulf Councils (off of Key West, Florida), as described above.

The 2006 reauthorization of the Magnuson-Stevens Act established new requirements that ACLs and AMs be implemented to end overfishing and prevent overfishing from occurring. AMs are management controls to prevent ACLs from being exceeded, and

to correct or mitigate the ACL if an overage occurs.

On December 30, 2010, NMFS issued a final rule (75 FR 82280) to implement Amendment 17B to the FMP (Amendment 17B). The final rule for Amendment 17B established ACLs for eight snapper-grouper species in the FMP that are undergoing overfishing, including black sea bass, and AMs if these ACLs are reached or exceeded. The recreational ACL for black sea bass is 409,000 lb (185,519 kg), gutted weight.

On June 1, 2012, NMFS issued a final rule (77 FR 32408) to implement Amendment 18A to the FMP (Amendment 18A). In part, the final rule for Amendment 18A modified the recreational sector AMs for black sea bass. The AMs described at 50 CFR 622.49(b)(5)(ii) require NMFS to close the recreational sector for black sea bass when the recreational ACL is reached, or is projected to be reached by filing a notification to that effect with the Office of the Federal Register. Based on the best scientific information available, NMFS has determined that the black sea bass recreational ACL of 409,000 lb (185,519 kg), gutted weight; 482,620 lb (218,913 kg), round weight, has been reached. Accordingly, NMFS is implementing the necessary AM to close the black sea bass recreational sector in the South Atlantic EEZ at 12:01 a.m., local time, on September 4, 2012, for the remainder of the 2012–2013 fishing year, from 35°15.19′ N. lat., the latitude of Cape Hatteras Light, North Carolina, south to the boundary between the South Atlantic and Gulf Councils, as previously described in this temporary rule.

On, and after, the effective date of the closure, the recreational bag and possession limit of black sea bass in or from the South Atlantic EEZ is zero. This zero bag and possession limit also applies in the South Atlantic on board a vessel for which a valid Federal charter vessel/headboat permit for South Atlantic snapper-grouper has been issued, without regard to where such species were harvested, *i.e.,* in state or Federal waters. The black sea bass recreational sector will reopen on June 1, 2013, the start of the 2013–2014 recreational fishing season.

Classification

The Regional Administrator, Southeast Region, NMFS, has determined this temporary rule is necessary for the conservation and management of the South Atlantic black sea bass component of the South Atlantic snapper-grouper fishery and is consistent with the Magnuson-Stevens Act and other applicable laws.

The temporary rule has been determined to be not significant for purposes of Executive Order 12866.

These measures are exempt from the procedures of the Regulatory Flexibility Act because this temporary rule is issued without opportunity for prior notice and comment.

Pursuant to 5 U.S.C. 553(b)(B), there is good cause to waive the requirements to provide prior notice and opportunity for public comment on this temporary rule. Such procedures are unnecessary because the AMs established by Amendment 18A and located at 50 CFR 622.49(b)(5)(ii) have already been subject to notice and comment and authorize the Assistant Administrator for Fisheries, NOAA, (AA) to file a notification with the Office of the Federal Register to close the recreational sector for black sea bass for the remainder of the fishing year, if recreational landings for black sea bass, reach or are projected to reach the recreational sector ACL. All that remains is to notify the public of the closure of the recreational sector for black sea bass for the remainder of the 2012–2013 fishing year.

Additionally, there is a need to immediately notify the public of the closure of the black sea bass recreational sector because South Atlantic black sea bass are undergoing overfishing and there is a 10-year rebuilding plan in place. Failure to close the recreational harvest of black sea bass in a timely fashion could result in negative biological effects and affect the rebuilding plan for black sea bass within the timeline specified by the Magnuson-Stevens Act. The current ACL is projected to have been met at this time and the delay in effectiveness of the actual closure date is solely to allow for sufficient notice to the recreational sector, including private and for-hire fishers.

To allow for adequate notice to the fishers while simultaneously protecting the black sea bass resource, this temporary rule provides notice to the public prior to the closure of recreational black sea bass to minimize disruption to the activities of the recreational sector. This notice will provide time to schedule and prepare for trips and to purchase the appropriate amount of supplies.

Therefore, the timing for this temporary rule is intended to maximize the biological benefits to the resource while attempting to minimize the negative economic harm to fishermen.

For the aforementioned reasons, the AA also finds good cause to waive the 30-day delay in the effectiveness of this action under 5 U.S.C. 553(d)(3).

Authority: 16 U.S.C. 1801 *et seq.*

Dated: August 24, 2012.

Lindsay Fullenkamp,

Acting Deputy Director, Office of Sustainable Fisheries, National Marine Fisheries Service.

[FR Doc. 2012–21307 Filed 8–24–12; 4:15 pm]

BILLING CODE 3510–22–P

DEPARTMENT OF COMMERCE

National Oceanic and Atmospheric Administration

50 CFR Part 648

[Docket No. 111220786–1781–01]

RIN 0648–XC176

Fisheries of the Northeastern United States; Summer Flounder Fishery; Commercial Quota Harvested for the Commonwealth of Massachusetts

AGENCY: National Marine Fisheries Service (NMFS), National Oceanic and Atmospheric Administration (NOAA), Commerce.

ACTION: Temporary rule; closure.

SUMMARY: NMFS announces that the 2012 summer flounder commercial quota allocated to the Commonwealth of Massachusetts has been harvested. Vessels issued a commercial Federal fisheries permit for the summer flounder fishery may not land summer flounder in Massachusetts for the remainder of calendar year 2012, unless additional quota becomes available through a transfer from another state. Regulations governing the summer flounder fishery require publication of this notification to advise Massachusetts that the quota has been harvested and to advise vessel permit holders and dealer permit holders that no Federal commercial quota is available for landing summer flounder in Massachusetts.

DATES: Effective at 0001 hr local time, August 28, 2012, through 2400 hr local time December 31, 2012.

FOR FURTHER INFORMATION CONTACT: Carly Bari, (978) 281–9224, or *Carly.Bari@noaa.gov.*

SUPPLEMENTARY INFORMATION: Regulations governing the summer flounder fishery are found at 50 CFR part 648. The regulations require annual specification of a commercial quota that is apportioned on a percentage basis among the coastal states from North Carolina through Maine. The process to set the annual commercial quota and the

percent allocated to each state is described in § 648.102.

The initial total commercial quota for summer flounder for the 2012 fishing year is 13,136,001 lb (5,958,490 kg) (76 FR 82189, December 30, 2011). The percent allocated to vessels landing summer flounder in Massachusetts is 6.82046 percent, resulting in a commercial quota of 895,936 lb (406,396 kg). The 2012 allocation was reduced to 868,226 lb (393,827 kg) after deduction of research set-aside and adjustment for 2011 quota overages.

The Administrator, Northeast Region, NMFS (Regional Administrator), monitors the state commercial quotas and determines when a state's commercial quota has been harvested. NMFS is required to publish notification in the **Federal Register** advising and notifying commercial vessels and dealer permit holders that, effective upon a specific date, the state's commercial quota has been harvested and no commercial quota is available for landing summer flounder in that state. The Regional Administrator has determined based upon dealer reports and other available information that Massachusetts has harvested its quota for 2012.

Section 648.4(b) provides that Federal permit holders agree, as a condition of the permit, not to land summer flounder in any state that the Regional Administrator has determined no longer has commercial quota available. Therefore, effective 0001 hours, August 28, 2012, landings of summer flounder in Massachusetts by vessels holding summer flounder commercial Federal fisheries permits are prohibited for the remainder of the 2012 calendar year, unless additional quota becomes available through a transfer and is announced in the **Federal Register**. Effective 0001 hours, August 28, 2012, federally permitted dealers are also notified that they may not purchase summer flounder from federally permitted vessels that land in Massachusetts for the remainder of the calendar year, or until additional quota becomes available through a transfer from another state.

Classification

This action is required by 50 CFR part 648 and is exempt from review under Executive Order 12866.

Authority: 16 U.S.C. 1801 *et seq.*

Dated: August 23, 2012.

Emily H. Menashes,

Deputy Director, Office of Sustainable Fisheries, National Marine Fisheries Service.

[FR Doc. 2012–21255 Filed 8–24–12; 11:15 am]

BILLING CODE 3510–22–P

Proposed Rules

Federal Register

Vol. 77, No. 168

Wednesday, August 29, 2012

This section of the FEDERAL REGISTER contains notices to the public of the proposed issuance of rules and regulations. The purpose of these notices is to give interested persons an opportunity to participate in the rule making prior to the adoption of the final rules.

DEPARTMENT OF TRANSPORTATION

Federal Aviation Administration

14 CFR Part 39

[Docket No. FAA–2012–0890; Directorate Identifier 2011–SW–019–AD]

RIN 2120–AA64

Airworthiness Directives; Hughes Helicopters, Inc., and McDonnell Douglas Helicopter Systems (Type Certificate Currently Held by MD Helicopters, Inc.) Helicopters

AGENCY: Federal Aviation Administration (FAA), DOT.

ACTION: Notice of proposed rulemaking (NPRM).

SUMMARY: We propose to adopt a new airworthiness directive (AD) for MD Helicopters, Inc. (MDHI) Model 369D, 369E, 369F, and 369FF helicopters with certain serial-numbered tailboom assemblies. This proposed AD is prompted by the discovery of short-edge margin conditions on two tailboom assemblies. The proposed actions are intended to detect a short-edge margin condition, to modify the tailboom by adding a longeron doubler over the area with the short-edge distance, and to prevent failure of the tailboom and subsequent loss of control of the helicopter.

DATES: We must receive comments on this proposed AD by October 29, 2012.

ADDRESSES: You may send comments by any of the following methods:

- *Federal eRulemaking Docket:* Go to *http://www.regulations.gov.* Follow the online instructions for sending your comments electronically.
- *Fax:* 202–493–2251.
- *Mail:* Send comments to the U.S. Department of Transportation, Docket Operations, M–30, West Building Ground Floor, Room W12–140, 1200 New Jersey Avenue SE., Washington, DC 20590–0001.
- *Hand Delivery:* Deliver to the ''Mail'' address between 9 a.m. and 5 p.m., Monday through Friday, except Federal holidays.

Examining the AD Docket: You may examine the AD docket on the Internet at *http://www.regulations.gov* or in person at the Docket Operations Office between 9 a.m. and 5 p.m., Monday through Friday, except Federal holidays. The AD docket contains this proposed AD, the economic evaluation, any comments received, and other information. The street address for the Docket Operations Office (telephone 800–647–5527) is in the **ADDRESSES** section. Comments will be available in the AD docket shortly after receipt.

For service information identified in this proposed AD, contact MD Helicopters Inc., Attn: Customer Support Division, 4555 E. McDowell Rd., Mail Stop M615, Mesa, AZ 85215–9734, telephone 1–800–388–3378, fax 480–346–6813, or at *http://www.mdhelicopters.com.* You may review referenced service information at the FAA, Office of Regional Counsel, Southwest Region, 2601 Meacham Boulevard, Room 663, Fort Worth, Texas 76137.

FOR FURTHER INFORMATION CONTACT: John Cecil, Aerospace Engineer, FAA, Los Angeles Aircraft Certification Office, Airframe Branch, 3960 Paramount Blvd., Lakewood, California 90712–4137, telephone (562) 627–5228, fax (562) 627–5210, email *john.cecil@faa.gov.*

SUPPLEMENTARY INFORMATION:

Comments Invited

We invite you to participate in this rulemaking by submitting written comments, data, or views. We also invite comments relating to the economic, environmental, energy, or federalism impacts that might result from adopting the proposals in this document. The most helpful comments reference a specific portion of the proposal, explain the reason for any recommended change, and include supporting data. To ensure the docket does not contain duplicate comments, commenters should send only one copy of written comments, or if comments are filed electronically, commenters should submit only one time.

We will file in the docket all comments that we receive, as well as a report summarizing each substantive public contact with FAA personnel concerning this proposed rulemaking. Before acting on this proposal, we will consider all comments we receive on or before the closing date for comments. We will consider comments filed after the comment period has closed if it is possible to do so without incurring expense or delay. We may change this proposal in light of the comments we receive.

Discussion

We are proposing to adopt a new AD for the specified MDHI helicopters with certain serial-numbered tailboom assemblies installed. Customers returned two tailboom assemblies to the manufacturer that contained an improperly installed frame ring at station 209.78. The frame rings were installed with too short a distance between an aft longeron rivet and the outboard edge of the frame ring. This is known as a short-edge margin condition.

FAA's Determination

We are proposing this AD because we evaluated all known relevant information and determined that an unsafe condition exists and is likely to exist or develop on other helicopters of these same type designs.

Related Service Information

MDHI has issued one Service Bulletin (SB), dated July 20, 2010, with 3 different numbers: SB No. SB369D–207 for the Model 369D helicopters, SB No. SB369E–102 for the Model 369E helicopters, and SB No. SB369F–087 for the Model 369F and FF helicopters. The MDHI SB describes procedures for measuring the distance from the aft face of the station 209.78 canted frame ring to the center of the No. 1 and No. 2 aft rivet locations on each of the four longerons spaced 90° apart around the frame ring. If a short-edge margin condition exists, the SB specifies modifying the tailboom by installing a repair doubler at each affected location.

Proposed AD Requirements

This proposed AD would require measuring the distance from the aft face of the station 209.78 frame ring to the center of rivet No. 1 and rivet No. 2 at the four locations where the frame ring attaches to the tailboom longeron. If either the No. 1 or No. 2 aft rivet at a frame-ring-to-tailboom longeron location is more than 0.50 inches (12.7 millimeters) from the aft face of the

station 209.78 frame ring, before further flight, the proposed AD would require modifying that location by fabricating and installing a doubler over the location in accordance with the previously-described service information.

Costs of Compliance

We estimate that this proposed AD would affect 109 helicopters of U.S. registry. We estimate that operators may incur the following costs in order to comply with this AD. $340 for 4 work hours to access and measure for a short-edge margin condition at $85 per hour for a total of $37,060 for the fleet.

The on-condition costs for installing the doubler are not included in our cost estimate because we have no way of determining the number of aircraft that might need a doubler, which would require about 8 work hours at $85 per hour for a total of $699 additional labor for each helicopter and $19 for required parts.

Authority for This Rulemaking

Title 49 of the United States Code specifies the FAA's authority to issue rules on aviation safety. Subtitle I, section 106, describes the authority of the FAA Administrator. ''Subtitle VII: Aviation Programs,'' describes in more detail the scope of the Agency's authority.

We are issuing this rulemaking under the authority described in ''Subtitle VII, Part A, Subpart III, Section 44701: General requirements.'' Under that section, Congress charges the FAA with promoting safe flight of civil aircraft in air commerce by prescribing regulations for practices, methods, and procedures the Administrator finds necessary for safety in air commerce. This regulation is within the scope of that authority because it addresses an unsafe condition that is likely to exist or develop on products identified in this rulemaking action.

Regulatory Findings

We determined that this proposed AD would not have federalism implications under Executive Order 13132. This proposed AD would not have a substantial direct effect on the States, on the relationship between the national Government and the States, or on the distribution of power and responsibilities among the various levels of government.

For the reasons discussed, I certify this proposed regulation:

1. Is not a ''significant regulatory action'' under Executive Order 12866;

2. Is not a ''significant rule'' under the DOT Regulatory Policies and Procedures (44 FR 11034, February 26, 1979);

3. Will not affect intrastate aviation in Alaska to the extent that it justifies making a regulatory distinction; and

4. Will not have a significant economic impact, positive or negative, on a substantial number of small entities under the criteria of the Regulatory Flexibility Act.

We prepared an economic evaluation of the estimated costs to comply with this proposed AD and placed it in the AD docket.

List of Subjects in 14 CFR Part 39

Air transportation, Aircraft, Aviation safety, Incorporation by Reference, Safety.

The Proposed Amendment

Accordingly, under the authority delegated to me by the Administrator, the FAA proposes to amend 14 CFR part 39 as follows:

PART 39—AIRWORTHINESS DIRECTIVES

1. The authority citation for part 39 continues to read as follows:

Authority: 49 U.S.C. 106(g), 40113, 44701.

§ 39.13 [Amended]

2. The FAA amends § 39.13 by adding the following new Airworthiness Directive (AD):

Hughes Helicopters Inc., and McDonnel Douglas Helicopter Systems (Type Certificate currently held by MD Helicopters, Inc. (MDHI)): Docket No. FAA–2012–0890; Directorate Identifier 2011–SW–019–AD.

(a) Applicability

This AD applies to Model 369D, E, F, and FF helicopters with tailboom assembly, part number (P/N) 369D23500–505, –507, –511, or –513 with a serial number prefix of ''7604'' and –0001 through –0003, –0006 through –0047, –0049 through –0082, or –0084 through –0113, installed, certificated in any category.

(b) Unsafe Condition

This AD defines the unsafe condition as too short an edge distance from an aft longeron rivet to the edge of a tailboom frame ring, which could result in failure of the tailboom and subsequent loss of control of the helicopter.

(c) Compliance

You are responsible for performing each action required by this AD within the specified compliance time unless it has already been accomplished prior to that time.

(d) Required Actions

(1) Within 6 months or 100 hours time-in-service, whichever occurs first, measure the distance from the aft face of the station 209.78 frame ring to the center of rivet No. 1 and rivet No. 2 at the four locations where the frame ring attaches to the tailboom longeron as depicted in Figure 2 of MD Helicopters Service Bulletin (SB) No. SB369D–207, SB369E–102, and SB369F–087, dated July 20, 2010. SB369D–207 applies to the Model 369D helicopters; SB369E–102 applies to the Model 369E helicopters; and SB369F–087 applies to Model 369F and FF helicopters.

Note to paragraph (d)(1) of this AD: The one MD Helicopters SB, dated July 20, 2010, contains three different numbers: SB369D–207; SB369E–102; and SB369F–087.

(2) If either the No. 1 or No. 2 aft rivet at a frame-ring-to-tailboom-longeron location is more than 0.50 inches (12.7 millimeters) from the aft face of the station 209.78 frame ring, before further flight, modify that location by fabricating and installing a doubler over the location as depicted in Figures 3 and 4 and by following the Accomplishment Instructions, paragraph 2.C., of the SB for your model helicopter.

(e) Alternative Methods of Compliance (AMOC)

(1) The Manager, Los Angeles Aircraft Certification Office, FAA, may approve AMOCs for this AD. Send your proposal to John Cecil, Aerospace Engineer, FAA, Los Angeles Aircraft Certification Office, Airframe Branch, 3960 Paramount Blvd., Lakewood, California 90712–4137, telephone (562) 627–5228, fax (562) 627–5210, email *john.cecil@faa.gov.*

(2) For operations conducted under a 14 CFR part 119 operating certificate or under 14 CFR part 91, subpart K, we suggest that you notify your principal inspector, or lacking a principal inspector, the manager of the local flight standards district office or certificate holding district office before operating any aircraft complying with this AD through an AMOC.

(f) Subject

Joint Aircraft System Component (JASC) Code 5302: Rotorcraft Tailboom.

Issued in Fort Worth, Texas, on August 16, 2012.

Kim Smith,

Manager, Rotorcraft Directorate, Aircraft Certification Service.

[FR Doc. 2012–21277 Filed 8–28–12; 8:45 am]

BILLING CODE 4910–13–P

DEPARTMENT OF TRANSPORTATION

Federal Aviation Administration

14 CFR Part 39

[Docket No. FAA–2012–0887; Directorate Identifier 2009–SW–02–AD]

RIN 2120–AA64

Airworthiness Directives; Eurocopter Deutschland GmbH Helicopters

AGENCY: Federal Aviation Administration (FAA), DOT.

ACTION: Notice of proposed rulemaking (NPRM).

SUMMARY: We propose to adopt a new airworthiness directive (AD) for Eurocopter Deutschland GmbH (ECD) Model BO–105A, BO–105C, BO–105S, BO–105LS A–1, BO–105LS A–3, MBB–BK 117 A–1, MBB–BK 117 A–3, MBB–BK 117 A–4, MBB–BK 117 B–1, MBB–BK–117 B–2, and MBB–BK 117 C–1 helicopters to require inspections for corrosion or thread damage to each tail rotor balance weight (weight) and each tail rotor control lever (lever). This proposed AD is prompted by a European Aviation Safety Agency (EASA) AD and a Transport Canada Civil Aviation (TCCA) AD, both issued based on a report that corrosion was detected on a weight in the area of the attachment thread on a model BO–105 helicopter. The proposed actions are intended to detect corrosion and thread damage in the threaded area of the weight and lever, and to prevent failure of a weight or lever, separation of tail rotor parts, severe vibration, and subsequent loss of control of the helicopter.

DATES: We must receive comments on this proposed AD by October 29, 2012.

ADDRESSES: You may send comments by any of the following methods:

- *Federal eRulemaking Docket:* Go to *http://www.regulations.gov.* Follow the online instructions for sending your comments electronically.
- *Fax:* 202–493–2251.
- *Mail:* Send comments to the U.S. Department of Transportation, Docket Operations, M–30, West Building Ground Floor, Room W12–140, 1200 New Jersey Avenue SE., Washington, DC 20590–0001.
- *Hand Delivery:* Deliver to the ''Mail'' address between 9 a.m. and 5 p.m., Monday through Friday, except Federal holidays.

Examining the AD Docket: You may examine the AD docket on the Internet at *http://www.regulations.gov* or in person at the Docket Operations Office between 9 a.m. and 5 p.m., Monday through Friday, except Federal holidays. The AD docket contains this proposed AD, the economic evaluation, any comments received, and other information. The street address for the Docket Operations Office (telephone 800–647–5527) is in the **ADDRESSES** section. Comments will be available in the AD docket shortly after receipt.

For service information identified in this proposed AD, contact American Eurocopter Corporation, 2701 Forum Drive, Grand Prairie, TX 75053–4005; telephone (972) 641–3460; fax (972) 641–3527; or at *http://www.eurocopter.com.* You may review the referenced service information at the FAA, Office of the Regional Counsel, Southwest Region, 2601 Meacham Blvd., Room 663, Fort Worth, TX 76137.

FOR FURTHER INFORMATION CONTACT: Sharon Miles, Aviation Safety Engineer, Regulations and Policy Group, Rotorcraft Directorate, FAA, 2601 Meacham Blvd., Fort Worth, TX 76137; telephone (817) 222–5110; email *sharon.y.miles@faa.gov.*

SUPPLEMENTARY INFORMATION:

Comments Invited

We invite you to participate in this rulemaking by submitting written comments, data, or views. We also invite comments relating to the economic, environmental, energy, or federalism impacts that might result from adopting the proposals in this document. The most helpful comments reference a specific portion of the proposal, explain the reason for any recommended change, and include supporting data. To ensure the docket does not contain duplicate comments, commenters should send only one copy of written comments, or if comments are filed electronically, commenters should submit only one time.

We will file in the docket all comments that we receive, as well as a report summarizing each substantive public contact with FAA personnel concerning this proposed rulemaking. Before acting on this proposal, we will consider all comments we receive on or before the closing date for comments. We will consider comments filed after the comment period has closed if it is possible to do so without incurring expense or delay. We may change this proposal in light of the comments we receive.

Discussion

EASA has issued EASA AD No. 2008–0206, dated November 25, 2008, to correct the unsafe condition for the ECD Model BO 105 A, BO 105 C, BO 105 LS A–1, BO 105 D, BO 105 DS, BO 105 DB, BO 105 DBS, BO 105 DB–4, BO 105 DBS–4, BO 105 DBS–5, BO 105 S, MBB–BK 117 A–1, MBB–BK 117 A–3, MBB–BK 117 A–4, MBB–BK 117 B–1, MBB–BK 117 B–2, and MBB–BK 117 C–1 helicopters, all serial numbers. The TCCA has issued Canadian AD No. CF–2009–12, dated March 24, 2009, to correct the unsafe condition for the Eurocopter Model BO 105 LS A–3 helicopters. These ADs state that during a periodical inspection, corrosion was detected on the weights in the area of the attachment thread. Since the issuance of the Canadian AD, the type certificate for the Model BO 105 LS A–3 has been transferred from Eurocopter Canada Limited to Eurocopter Deutschland (Germany).

The proposed actions are intended to detect corrosion and thread damage in the threaded area of a weight or lever, to prevent failure of a weight or lever, separation of tail rotor parts, severe vibration, and subsequent loss of control of the helicopter. You may obtain further information by examining the EASA and TCCA ADs and any related service information in the AD docket.

FAA's Determination

These helicopters have been approved by the aviation authority of Germany and are approved for operation in the United States. Pursuant to our bilateral agreement with Germany, EASA, its technical representative, has notified us of the unsafe condition described in its AD. We are proposing this AD because we evaluated all known relevant information and determined that an unsafe condition is likely to exist or develop on other products of the same type design.

Related Service Information

Eurocopter has issued Alert Service Bulletin (ASB) No. ASB–MBB–BK 117–30–113, dated September 23, 2008, for all MBB BK 117 model ''A–1 to C–1'' helicopters; ASB No. ASB BO105–30–116, dated September 23, 2008, for all Model BO105 helicopters ''including BO105 CB–3 and BO105 CBS–5 KLH;'' and Eurocopter Canada Limited has issued ASB No. ASB BO 105 LS 30–12, dated December 12, 2008, for Model BO 105 LS A–3 helicopters. These ASBs specify visually inspecting the weights and levers to detect corrosion or mechanical damage; corrosion at an advanced stage could destroy the threads. These ASBs also specify replacing damaged weights and levers that exceed certain limits. The actions described in the mandatory EASA and TCCA ADs are intended to correct the unsafe condition, identified in these ASBs, to ensure the continued airworthiness of these helicopters.

Proposed AD Requirements

This proposed AD would require compliance with specified portions of the manufacturer's service bulletin in conducting repetitive visual inspections of each weight and lever and would provide procedures for installing a weight or lever. Additionally, it proposes allowable tolerances for corrosion or thread damage on the threaded portion of a weight or lever and would require that a part with

corrosion or mechanical damage in excess of allowable tolerances be replaced with an airworthy part.

Differences Between This Proposed AD and the EASA and TCCA ADs

This proposed AD does not provide an extra 60 flight hours or 6 months beyond the repetitive compliance time of 600 flight hours or 48 months for the repetitive inspections. These proposals only apply to those model helicopters type-certificated in the United States.

Costs of Compliance

We estimate that this proposed AD would affect about 33 helicopters of U.S. Registry. We estimate that operators may incur the following costs in order to comply with this AD. It would take approximately 4 work-hours per helicopter to remove, inspect, and install 2 lever assemblies and 4 weights per helicopter at an average labor rate of $85 per work-hour. Based on these figures, we estimate the inspection cost of this proposed AD would be $340 per helicopter or $11,220 on U.S. operators per inspection cycle. The required parts would cost about $5,332 per helicopter. We estimate the cost for replacement would be $5,672 per helicopter, assuming both lever assemblies and all 4 weights are replaced.

Authority for This Rulemaking

Title 49 of the United States Code specifies the FAA's authority to issue rules on aviation safety. Subtitle I, section 106, describes the authority of the FAA Administrator. ''Subtitle VII: Aviation Programs,'' describes in more detail the scope of the Agency's authority.

We are issuing this rulemaking under the authority described in ''Subtitle VII, Part A, Subpart III, Section 44701: General requirements.'' Under that section, Congress charges the FAA with promoting safe flight of civil aircraft in air commerce by prescribing regulations for practices, methods, and procedures the Administrator finds necessary for safety in air commerce. This regulation is within the scope of that authority because it addresses an unsafe condition that is likely to exist or develop on products identified in this rulemaking action.

Regulatory Findings

We determined that this proposed AD would not have federalism implications under Executive Order 13132. This proposed AD would not have a substantial direct effect on the States, on the relationship between the national Government and the States, or on the distribution of power and responsibilities among the various levels of government.

For the reasons discussed, I certify this proposed regulation:

1. Is not a ''significant regulatory action'' under Executive Order 12866;

2. Is not a ''significant rule'' under the DOT Regulatory Policies and Procedures (44 FR 11034, February 26, 1979);

3. Will not affect intrastate aviation in Alaska to the extent that it justifies making a regulatory distinction; and

4. Will not have a significant economic impact, positive or negative, on a substantial number of small entities under the criteria of the Regulatory Flexibility Act.

We prepared an economic evaluation of the estimated costs to comply with this proposed AD and placed it in the AD docket.

List of Subjects in 14 CFR Part 39

Air transportation, Aircraft, Aviation safety, Incorporation by reference, Safety.

The Proposed Amendment

Accordingly, under the authority delegated to me by the Administrator, the FAA proposes to amend 14 CFR part 39 as follows:

PART 39—AIRWORTHINESS DIRECTIVES

1. The authority citation for part 39 continues to read as follows:

Authority: 49 U.S.C. 106(g), 40113, 44701.

§ 39.13 [Amended]

2. The FAA amends § 39.13 by adding the following new airworthiness directive (AD):

EUROCOPTER DEUTSCHLAND GmbH (ECD): Docket No. FAA–2012–0887; Directorate Identifier 2009–SW–02–AD.

(a) Applicability

This AD applies to Model BO–105A, BO–105C, BO–105S, and BO–105LS A–1 helicopters, with a tail rotor control lever (lever), part number (P/N) 105–317231, 105–317365, 105–31736, 105–31767, 105–31728, or 1121–31730, with tail rotor balance weight (weight) P/N 117–31715.01, 117–31715.02, 105–31728.03, 105–31732.07, or 105–31732.08; Model BO–105LS A–3 helicopters, with lever P/N 105–31736 or 105–31767, with weight P/N 117–31715.01, 117–31715.02, B642M1011 201, or 105–317171.10; and Model MBB–BK 117 A–1, MBB–BK 117 A–3, MBB–BK 117 A–4, MBB–BK117 B–1, MBB–BK 117 B–2, and MBB–BK 117 C–1 helicopters, with lever P/N 117–31730, 117–317361, or 105–31736, with weight P/N 117–31714.07, 117–31715.01, 117–31720.01, or 117–31730.02, certificated in any category.

(b) Unsafe Condition

This AD defines the unsafe condition as corrosion or thread damage in the threaded area of a lever or weight. This condition could result in failure of a weight or lever, separation of a tail rotor part, severe tail rotor vibration, and subsequent loss of control of the helicopter.

(c) Compliance

You are responsible for performing each action required by this AD within the specified compliance time unless it has already been accomplished prior to that time.

(d) Required Actions

Within 100 hours time-in-service (TIS) or 2 months, whichever occurs first, and thereafter at intervals not to exceed 600 hours TIS or 48 months, whichever occurs first:

(1) Remove the weights from the lever as depicted in Figure 1 to paragraph (d) of this AD. Apply marks to the weights before they are removed in order to be able to re-establish the correct assignment and the old installation position towards the lever when the weights are installed.

BILLING CODE 4910–13–P

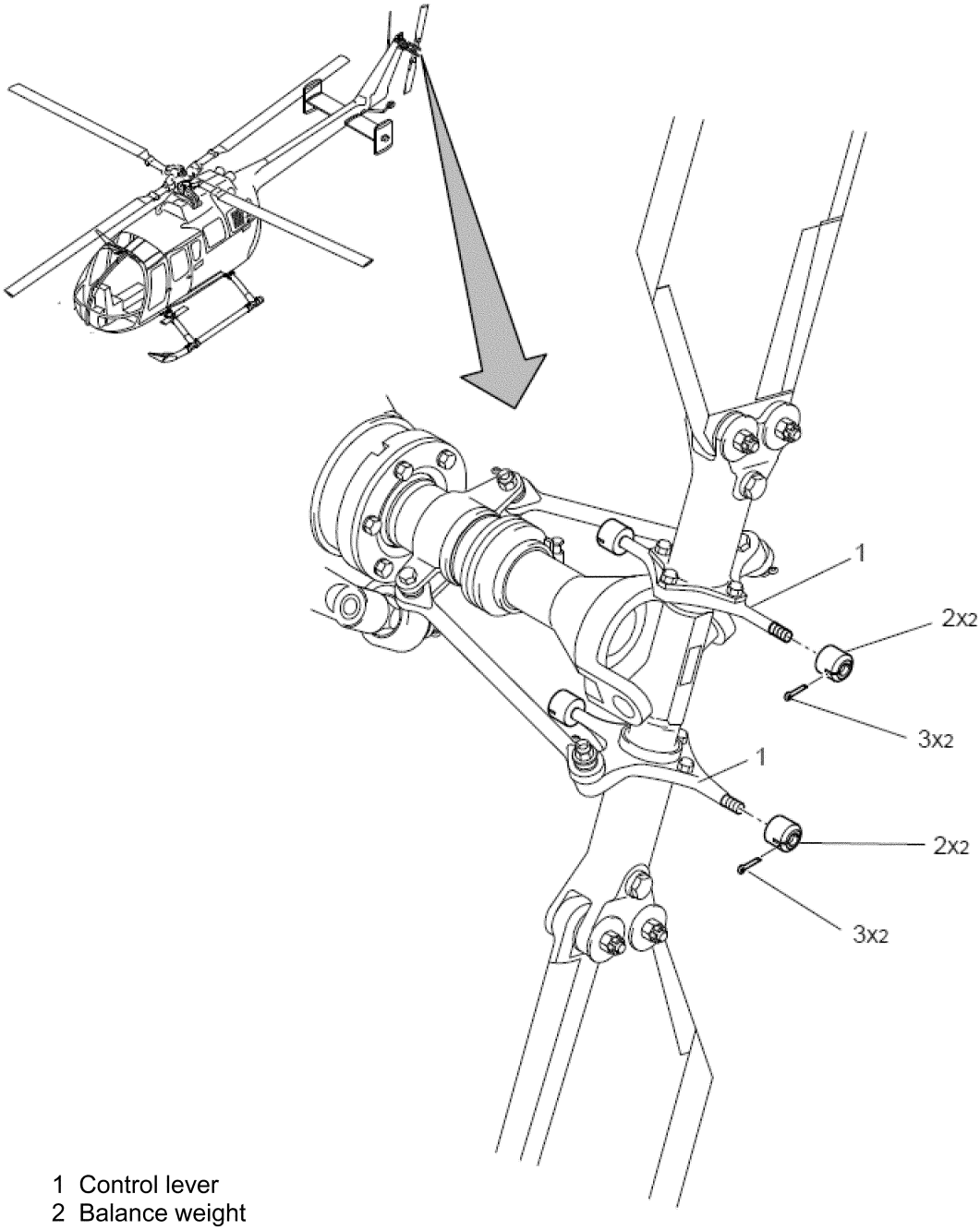

1 Control lever
2 Balance weight
3 Cotter pin LN94-30022

Figure 1 to paragraph (d) Tail Rotor Balance Weights

(2) Visually inspect each weight and lever for corrosion and damage in the threaded areas as depicted in Figure 2 to paragraph (d) of this AD.

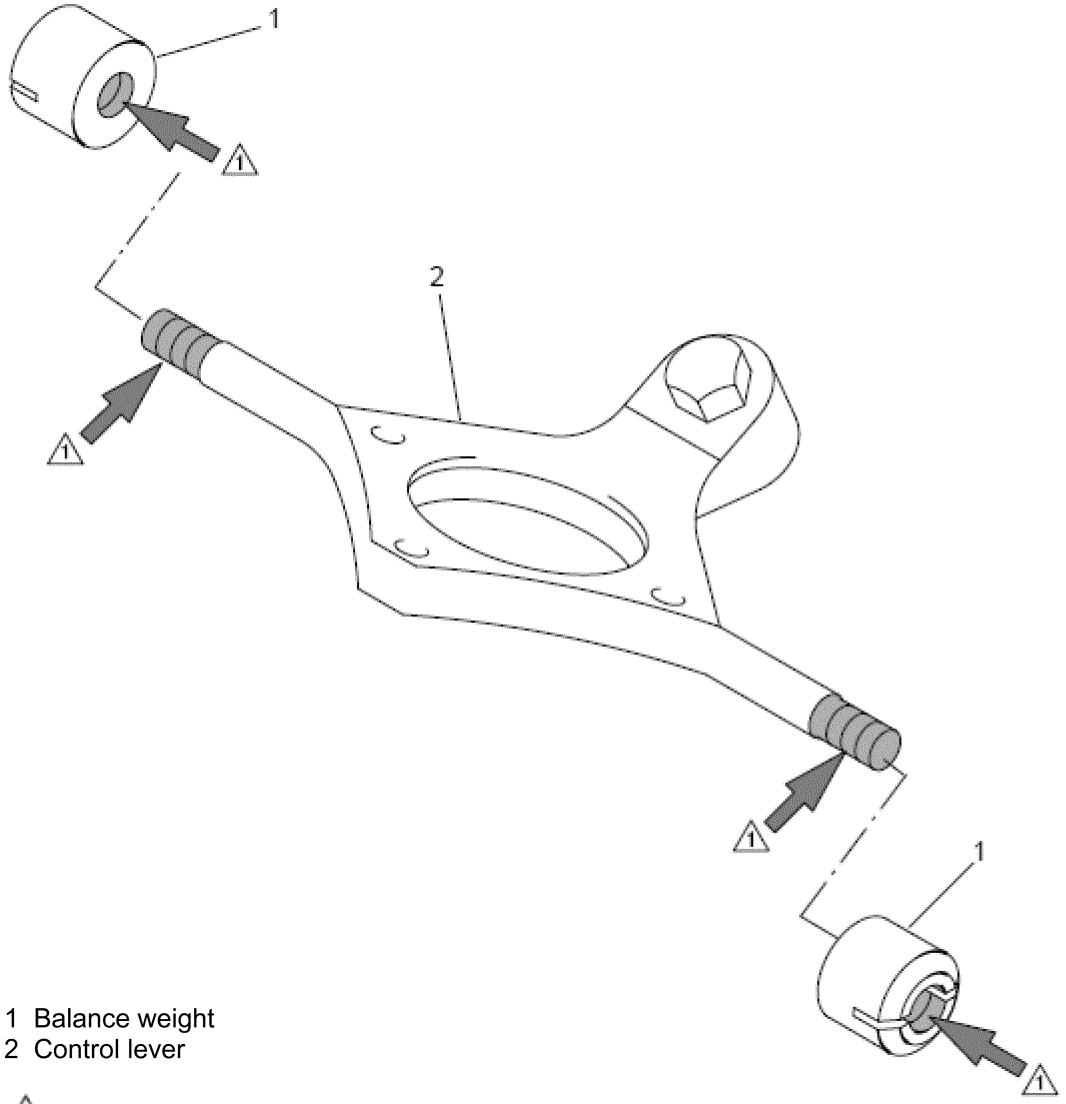

Figure 2 to paragraph (d) Inspection of Balance Weights and Control Lever

BILLING CODE 4910–13–C

(i) If there is no corrosion or thread damage on either the weight or lever, before further flight, reinstall the weight by following paragraph (d)(3) of this AD.

(ii) If there is corrosion or thread damage on the threaded portion of a *weight:*

(A) If the total area of corrosion or thread damage, or both, covers less than 25 percent of the length of the threaded area, the weight can be threaded (screwed) onto the lever, and the cylindrical mating surface has no damage, before further flight, remove the corrosion and reinstall the weight by following paragraph (d)(3) of this AD.

(B) If the total area of corrosion or thread damage, or both, covers 25 percent or more of the length of the threaded area, the weight cannot be threaded (screwed) onto the lever, or the cylindrical mating surface has damage, before further flight, replace the weight with an airworthy weight by following paragraph (d)(3) of this AD.

(iii) If there is corrosion or thread damage on the threaded portion of the *lever,* polish out the corrosion and thread damage using a polishing cloth 600 and:

(A) If the thread depth does not exceed 0.3 millimeter (mm) and the diameter of the lever in the area before the threaded area is not less than 9.95 mm after polish out, before further flight, install airworthy weights to the lever by following paragraph (d)(3) of this AD.

(B) If the thread depth is 0.3 mm or greater or the diameter of the lever in the area before the threaded area is less than 9.95 mm after polish out, before further flight, replace the lever with an airworthy lever.

(3) Apply corrosion preventive paste onto the thread of the lever and install weights to

the lever as depicted in Figure 1 to paragraph (d) of this AD. Ensure during installation of the weights that the weights are correctly assigned and installed to the control lever in accordance with the applied marks.

(e) Alternative Methods of Compliance (AMOC)

(1) The Manager, Safety Management Group, FAA, may approve AMOCs for this AD. Send your proposal to: Sharon Miles, Aviation Safety Engineer, Regulations and Policy Group, Rotorcraft Directorate, FAA, 2601 Meacham Blvd., Fort Worth, TX 76137; telephone (817) 222–5110; email *sharon.y.miles@faa.gov.*

(2) For operations conducted under a 14 CFR part 119 operating certificate or under 14 CFR part 91, subpart K, we suggest that you notify your principal inspector, or lacking a principal inspector, the manager of the local flight standards district office or certificate holding district office before operating any aircraft complying with this AD through an AMOC.

(f) Additional Information

The subject of this AD is addressed in the European Aviation Safety Agency (Germany) AD No. 2008–0206, dated November 25, 2008, and in the Transport Canada Civil Aviation AD No. CF–2009–12, dated March 24, 2009.

(g) Subject

Joint Aircraft Service Component (JASC) Code: 6420, Tail Rotor Head.

Issued in Fort Worth, Texas, on August 16, 2012.

Kim Smith,

Manager, Rotorcraft Directorate, Aircraft Certification Service.

[FR Doc. 2012–21284 Filed 8–28–12; 8:45 am]

BILLING CODE 4910–13–P

DEPARTMENT OF TRANSPORTATION

Federal Aviation Administration

14 CFR Part 39

[Docket No. FAA–2012–0886; Directorate Identifier 2008–SW–067–AD]

RIN 2120–AA64

Airworthiness Directives; Agusta S.p.A. Helicopters

AGENCY: Federal Aviation Administration (FAA), DOT.

ACTION: Notice of proposed rulemaking (NPRM).

SUMMARY: We propose to adopt a new airworthiness directive (AD) for the Agusta S.p.A. (Agusta) Model AB139 and AW139 helicopters with a certain wire strike protection system (WSPS) top cable cutter assembly installed. This proposed AD is prompted by a report of in-flight contact between the top cable cutter assembly and two main rotor (M/R) blades. This proposed AD would require reworking or replacing the top cable-cutter assembly to increase clearance between the WSPS and the M/R blades. The proposed AD actions are intended to prevent damage to the M/R blades and subsequent loss of helicopter control.

DATES: We must receive comments on this proposed AD by October 29, 2012.

ADDRESSES: You may send comments by any of the following methods:

- *Federal eRulemaking Docket:* Go to *http://www.regulations.gov.* Follow the online instructions for sending your comments electronically.
- *Fax:* 202–493–2251.
- *Mail:* Send comments to the U.S. Department of Transportation, Docket Operations, M–30, West Building Ground Floor, Room W12–140, 1200 New Jersey Avenue SE., Washington, DC 20590–0001.
- *Hand Delivery:* Deliver to the ''Mail'' address between 9 a.m. and 5 p.m., Monday through Friday, except Federal holidays.

Examining the AD Docket: You may examine the AD docket on the Internet at *http://www.regulations.gov* or in person at the Docket Operations Office between 9 a.m. and 5 p.m., Monday through Friday, except Federal holidays. The AD docket contains this proposed AD, the economic evaluation, any comments received, and other information. The street address for the Docket Operations Office (telephone 800–647–5527) is in the **ADDRESSES** section. Comments will be available in the AD docket shortly after receipt.

For service information identified in this proposed AD, contact Agusta, Via Giovanni Agusta, 520 21017 Cascina Costa di Samarate (VA), Italy, telephone 39 0331-229111, fax 39 0331–229605/222595, or at *http://customersupport.agusta.com/technical_advice.php.* You may review a copy of the referenced service information at the FAA, Office of the Regional Counsel, Southwest Region, 2601 Meacham Blvd., Room 663, Fort Worth, Texas 76137.

FOR FURTHER INFORMATION CONTACT: Sharon Miles, Aviation Safety Engineer, Regulations and Policy Group, Rotorcraft Directorate, FAA, 2601 Meacham Blvd., Fort Worth, TX 76137; telephone (817) 222–5110; email *sharon.y.miles@faa.gov.*

SUPPLEMENTARY INFORMATION:

Comments Invited

We invite you to participate in this rulemaking by submitting written comments, data, or views. We also invite comments relating to the economic, environmental, energy, or federalism impacts that might result from adopting the proposals in this document. The most helpful comments reference a specific portion of the proposal, explain the reason for any recommended change, and include supporting data. To ensure the docket does not contain duplicate comments, commenters should send only one copy of written comments, or if comments are filed electronically, commenters should submit only one time.

We will file in the docket all comments that we receive, as well as a report summarizing each substantive public contact with FAA personnel concerning this proposed rulemaking. Before acting on this proposal, we will consider all comments we receive on or before the closing date for comments. We will consider comments filed after the comment period has closed if it is possible to do so without incurring expense or delay. We may change this proposal in light of the comments we receive.

Discussion

The European Aviation Safety Agency (EASA), which is the Technical Agent for the Member States of the European Union, has issued EASA AD No. 2008–0148, dated August 5, 2008, to correct the unsafe condition for these Agusta helicopters with a top cable cutter assembly, part number (P/N) 423–83001–1, which is part of the WSPS, P/N 4G9540F00211 or P/N 4G9540F00311. An incident of in-flight contact between the top cable cutter assembly and two M/R blades has been reported. Our proposed AD actions are intended to prevent damage to the M/R blades and subsequent loss of helicopter control.

FAA's Determination

These helicopters have been approved by the aviation authority of Italy and are approved for operation in the United States. Pursuant to our bilateral agreement with Italy, EASA, its technical representative, has notified us of the unsafe condition described in its AD. We are proposing this AD because we evaluated all known relevant information and determined that an unsafe condition is likely to exist or develop on other products of these same type designs.

Related Service Information

We reviewed Agusta Bollettino Tecnico No. 139–126, dated June 20, 2008 (BT), which applies to Model AB139 and AW139 helicopters with certain serial-numbered wire strike protection systems. The BT specifies, within 200 flight hours, reworking the

top cable cutter assembly and marking it with ''BT 139–126 Rev./'' in a visible and permanent manner. EASA classified this BT as mandatory and issued AD No. 2008–0148 to ensure the continued airworthiness of these helicopters.

Proposed AD Requirements

This proposed AD would require:

- Within 200 hours time-in-service, removing the WSPS upper installation, P/N 4G9540A00111, including cutter assembly, P/N 423–83001–1.
- Before installing a WSPS upper installation, P/N 4G9540A00111, either:
  - Reworking the top cable cutter assembly, P/N 423–83001–1, in accordance with portions of BT No. 139–126; or
  - Replacing the top cable cutter assembly, P/N 423–83001–1, with an airworthy top cable cutter assembly.

Differences Between This Proposed AD and the EASA AD

The EASA AD requires marking the reworked top cable-cutter assembly, and this proposed AD does not.

Costs of Compliance

We estimate that this proposed AD would affect about 39 helicopters of U.S. registry. We also estimate that it would take about three work-hours per helicopter to rework the top cable-cutter assembly, one work-hour to replace the top cable-cutter assembly, and one work-hour to remove the WSPS upper installation. The average labor rate is $85 per work-hour. Required parts would cost about $9,000 per helicopter to replace the cutter. Based on these figures, we estimate the cost of the proposed AD on U.S. operators would be $255 per helicopter to rework the top cable-cutter assembly, $9,085 per helicopter to replace the top cable-cutter assembly, and $85 per helicopter to remove the WSPS.

Authority for This Rulemaking

Title 49 of the United States Code specifies the FAA's authority to issue rules on aviation safety. Subtitle I, section 106, describes the authority of the FAA Administrator. ''Subtitle VII: Aviation Programs,'' describes in more detail the scope of the Agency's authority.

We are issuing this rulemaking under the authority described in ''Subtitle VII, Part A, Subpart III, Section 44701: General requirements.'' Under that section, Congress charges the FAA with promoting safe flight of civil aircraft in air commerce by prescribing regulations for practices, methods, and procedures the Administrator finds necessary for safety in air commerce. This regulation is within the scope of that authority because it addresses an unsafe condition that is likely to exist or develop on products identified in this rulemaking action.

Regulatory Findings

We determined that this proposed AD would not have federalism implications under Executive Order 13132. This proposed AD would not have a substantial direct effect on the States, on the relationship between the national Government and the States, or on the distribution of power and responsibilities among the various levels of government.

For the reasons discussed, I certify this proposed regulation:

1. Is not a ''significant regulatory action'' under Executive Order 12866;
2. Is not a ''significant rule'' under the DOT Regulatory Policies and Procedures (44 FR 11034, February 26, 1979);
3. Will not affect intrastate aviation in Alaska to the extent that it justifies making a regulatory distinction; and
4. Will not have a significant economic impact, positive or negative, on a substantial number of small entities under the criteria of the Regulatory Flexibility Act.

We prepared an economic evaluation of the estimated costs to comply with this proposed AD and placed it in the AD docket.

List of Subjects in 14 CFR Part 39

Air transportation, Aircraft, Aviation safety, Incorporation by Reference, Safety.

The Proposed Amendment

Accordingly, under the authority delegated to me by the Administrator, the FAA proposes to amend 14 CFR part 39 as follows:

PART 39—AIRWORTHINESS DIRECTIVES

1. The authority citation for part 39 continues to read as follows:

Authority: 49 U.S.C. 106(g), 40113, 44701.

§ 39.13 [Amended]

2. The FAA amends § 39.13 by adding the following new airworthiness directive (AD):

Agusta S.p.A Helicopters (Agusta): Docket No. FAA–2012–0886; Directorate Identifier 2008–SW–067–AD.

(a) Applicability

This AD applies to Agusta Model AB139 and AW139 helicopters, with a wire strike protection system (WSPS) top cable cutter assembly, part number (P/N) 423–83001–1, installed, which is part of the WSPS, P/N 4G9540F00211 or P/N 4G9540F00311, certificated in any category.

(b) Unsafe Condition

This AD defines the unsafe condition as in-flight contact between the top cable cutter assembly and main rotor (M/R) blades. This condition could result in damage to the M/R blades and subsequent loss of helicopter control.

(c) Compliance

You are responsible for performing each action required by this AD within the specified compliance time unless it has already been accomplished prior to that time.

(d) Required Actions

(1) Within 200 hours time-in-service, remove the WSPS upper installation, P/N 4G9540A00111, including top cable cutter assembly, P/N 423–83001–1.

(2) Before installing a WSPS upper installation, P/N 4G9540A00111, either:

(i) Rework the top cable cutter assembly, P/N 423–83001–1, in accordance with the Compliance Instructions, paragraph 3.1 through 3.5, and Figure 1 of Agusta Bolletino Technico No. 139–126, dated June 20, 2008; or

(ii) Replace the top cable cutter assembly, P/N 423–83001–1, with an airworthy top cable cutter assembly.

(e) Alternative Methods of Compliance (AMOC)

(1) The Manager, Safety Management Group, FAA, may approve AMOCs for this AD. Send your proposal to: Sharon Miles, Aviation Safety Engineer, Regulations and Policy Group, Rotorcraft Directorate, FAA, 2601 Meacham Blvd., Fort Worth, TX 76137; telephone (817) 222–5110; email *sharon.y.miles@faa.gov.*

(2) For operations conducted under a 14 CFR part 119 operating certificate or under 14 CFR part 91, subpart K, we suggest that you notify your principal inspector, or lacking a principal inspector, the manager of the local flight standards district office or certificate holding district office before operating any aircraft complying with this AD through an AMOC.

(f) Additional Information

(1) For service information identified in this AD, contact Agusta, Via Giovanni Agusta, 520 21017 Cascina Costa di Samarate (VA), Italy, telephone 39 0331–229111, fax 39 0331–229605/222595, or at *http://customersupport.agusta.com/technical_advice.php.* You may review a copy of the service information at the FAA, Office of the Regional Counsel, Southwest Region, 2601 Meacham Blvd., Room 663, Fort Worth, Texas 76137.

(2) The subject of this AD is addressed in European Aviation Safety Agency (EASA) AD No. 2008–0148, dated August 5, 2008.

(g) Subject

Joint Aircraft Service Component (JASC) Code: 5320: Fuselage Miscellaneous Structure.

Issued in Fort Worth, Texas, on August 16, 2012.

Kim Smith,

Manager, Rotorcraft Directorate, Aircraft Certification Service.

[FR Doc. 2012–21285 Filed 8–28–12; 8:45 am]

BILLING CODE 4910–13–P

CONSUMER PRODUCT SAFETY COMMISSION

16 CFR Part 1221

[CPSC Docket No. CPSC–2011–0064]

Safety Standard for Play Yards

AGENCY: Consumer Product Safety Commission.

ACTION: Notice of proposed rulemaking.

SUMMARY: The United States Consumer Product Safety Commission (Commission, CPSC, us, or we) is proposing to amend the play yard mandatory standard. This proposed rule would address the hazards associated with the use of play yard bassinet accessories that can be assembled with missing key structural elements. The amendment is being proposed pursuant to section 104(b) of the Consumer Product Safety Improvement Act of 2008 (CPSIA), also known as the ''Danny Keysar Child Product Safety Notification Act'' which requires us to promulgate consumer product safety standards for durable infant or toddler products.

DATES: Submit comments by November 13, 2012.

ADDRESSES: You may submit comments, identified by CPSC Docket No. CPSC–2011–0064 by any of the following methods:

Electronic Submissions: Submit electronic comments to the Federal eRulemaking Portal at: *http://www.regulations.gov.* Follow the instructions for submitting comments. To ensure timely processing of comments, the Commission is no longer directly accepting comments submitted by electronic mail (email), except through *www.regulations.gov.* The Commission encourages you to submit electronic comments by using the Federal eRulemaking Portal, as described above.

Written Submissions: Submit written submissions in the following way: Mail/Hand delivery/Courier (for paper, disk, or CD–ROM submissions), preferably in five copies, to: Office of the Secretary, Consumer Product Safety Commission, Room 820, 4330 East West Highway, Bethesda, MD 20814; telephone (301) 504–7923.

Instructions: All submissions received must include the agency name and docket number for this proposed rulemaking. All comments received may be posted without change, including any personal identifiers, contact information, or other personal information provided, to *http://www.regulations.gov.* Do not submit confidential business information, trade secret information, or other sensitive or protected information that you do not want to be available to the public. If furnished at all, such information should be submitted in writing.

Docket: For access to the docket to read background documents or comments received, go to *http://www.regulations.gov,* and insert the docket number, CPSC–2011–0064, into the ''Search'' box and follow the prompts.

FOR FURTHER INFORMATION CONTACT: Gregory K. Rea, Project Manager, Directorate for Laboratory Sciences, Consumer Product Safety Commission, 5 Research Place, Rockville, MD 20850; email: *GRea@cpsc.gov.*

SUPPLEMENTARY INFORMATION:

A. Background

In the **Federal Register** of September 20, 2011 (76 FR 58167), we published a notice of proposed rulemaking (NPR) to establish a safety standard for play yards pursuant to section 104(b) of the CPSIA, also known as the ''Danny Keysar Child Product Safety Notification Act.'' On June 6, 2012, a draft final rule on play yards was submitted to the Commission for their consideration. The draft final rule incorporated by reference ASTM F406–12a, ''Standard Consumer Safety Specification for Non-Full-Size Baby Cribs/Play Yards.'' The draft final rule included one additional requirement not present in ASTM F406–12a. That requirement would have addressed the hazards associated with the use of play yard bassinet accessories that can be assembled with missing key structural elements. We refer to this provision in this document as the ''bassinet misassembly requirement.'' The bassinet misassembly requirement was created after we received a comment in response to the play yard NPR.

On June 27, 2012, the Commission voted unanimously to approve publication in the **Federal Register** of the draft final rule to establish a safety standard for play yards. Today, elsewhere in the **Federal Register**, we are publishing the final rule, which reflects several changes directed by the Commission in its vote. Specifically, the Commission voted to remove the bassinet misassembly requirement from the draft play yard final rule submitted by staff. In light of that, the Commission also voted to provide a 6-month effective date for the safety standard for play yards, instead of 12 months as stated in the draft final rule because the recommendation for a 12 month effective date was based on the inclusion of the bassinet misassembly requirement. In addition, the Commission directed staff to draft and publish an NPR seeking comment regarding an amendment to the play yard mandatory standard to include the bassinet misassembly requirement, which is the subject of this notice. The Commission's Order, as well as Chairman Inez M. Tenenbaum's statement on the final rule to establish a safety standards for play yards, can be viewed at: *http://www.cpsc.gov/library/foia/ballot/ballot12/ballot12.html.*

B. Description of the Proposed Rule

1. Summary of the Hazard and the Infant Fatality

In August 2011, we received a report of an infant fatality in the bassinet accessory of a play yard. The child died when the sleeping surface of the bassinet tilted, causing the child to slip into the corner where she suffocated. A review of the In-Depth Investigation Report (IDI) 110825CAA2853, as well as our tests on an exemplar model of the bassinet accessory and play yard involved in the fatality, led us to conclude that the incident was caused by the omission of key structural elements.

Many play yards are sold with accessories that attach to the product, such as bassinets, changing tables, and mobiles. Bassinet accessories are unique among play yard accessories because they are intended to be used as a sleeping environment, and infants are meant to be left unsupervised in them for extended periods of time. Serious injuries or fatalities can result if a play yard bassinet accessory has been assembled without key structural elements, such as rods, tubes, bars, and hooks, which keep the sleep surface flat and level. A tilt in the sleeping surface of the bassinet can result in an infant getting into a position where he or she is unable to breathe and is at risk of suffocation.

As seen in the IDI, it is possible that the omission of key structural elements may not initially be visually evident to the consumer. If the misassembled accessory supports an infant without a catastrophic and obvious change to the sleep surface, a consumer may continue to use the accessory and inadvertently place a child in danger. If the bassinet's

sleep surface tilts while the child is unsupervised, the condition may not be discovered by the caregiver for hours, placing the child in a potentially fatal situation.

Initially, the IDI completed for the fatality in August 2011 indicated that the tilt in the sleeping surface was caused by the detachment of plastic clips attached to the bassinet shell that secured the shell to the side rails of the play yard. Sometime after the child was placed in the bassinet accessory, one of the plastic clips detached. However, our testing indicates that detachment of one of the plastic clips is not enough to cause the tilt in the sleeping surface that led to the fatality. Indeed, the plastic clips caused the consumer to *erroneously assume that the product was safe,* when key structural elements, the supporting rods, were missing.

The requirement we are proposing here will address this hazard. Manufacturers will be given two ways to comply. The first way to comply prevents misassembly by requiring that all key structural elements be attached permanently to the bassinet shell. The second method of compliance is designed to alert consumers if a key structural element is missing by requiring that the removal of even one key structural element results in a catastrophic failure of the bassinet. The test for this method of compliance is referred to as the ''catastrophic failure test'' in this document.

2. The Bassinet Misassembly Requirement

Most bassinet accessories consist of a fabric shell that is attached to the side rails of the play yard. The shell is supported by rods, tubes, bars, or hooks. The segmented mattress pad that is used on the floor of the typical play yard is inserted into the bassinet shell.

The requirement we are proposing offers two avenues for compliance. First, the bassinet accessory would meet the requirement if all of the key structural elements are attached permanently to the bassinet accessory. Thus, manufacturers who attach the support rods, tubes, bars, or hooks permanently into the bassinet shell would not need to have their product tested to this requirement.

If a manufacturer chooses not to permanently attach key structural elements to the bassinet, the bassinet would have to be tested by removing each key structural element and numbering them from 1 through *n.* Subsequently, all the key structural elements are put back into place. Key structural element number 1 is then removed from the bassinet. In order to pass the test, when an anthromorphic infant dummy is placed in the center of the sleep surface, the product must: (1) Collapse completely, or (2) tilt more than 30°. The angle of 30° represents a safety factor of three times the 10° maximum safe sleep surface angle of incline. Our Human Factors staff concluded that an angle of 30° would be sufficiently visually obvious to a consumer, such that the consumer would be discouraged from continuing to use the bassinet. The test continues until each key structural element has been tested individually (thus, key structural element number 1 is inserted back into the product, key structural element number 2 is removed, and the test is repeated.) We refer to this test as the ''catastrophic failure test.''

The requirement is meant to ensure that the omission of a key structural element is so visually obvious that the consumer will not use the product and place the child in danger inadvertently. It should be noted that in order to *pass* this test, the item must *fail catastrophically* when each key structural element is omitted.

Most manufacturers will use rods, tubes, bars, or hooks to support the bassinet shell. Thus, the mattress pad is not a key structural element under this provision, unless the manufacturer chooses to stiffen the mattress pad itself in order to provide structural support to the bassinet. If the mattress pad provides the structural support for the bassinet, it becomes a key structural element and must either be attached permanently to the bassinet or designed in such a way that omission of the mattress pad causes the bassinet to become obviously unusable.

In addition to the performance requirement and test method, we are also proposing to modify one definition, add one definition, and include several graphics in the mandatory play yard standard in order to ensure that this requirement is clear to play yard suppliers and testing laboratories. We are modifying the definition of ''key structural elements'' to include ''the components that provide the supporting frame and/or means of attachment for a bassinet/cradle accessory.'' We are also proposing to add a new term, ''bassinet/cradle accessory,'' defined as ''a supported sleep surface that attaches to a non-full-size crib or play yard designed to convert the product into a bassinet/cradle intended to have a horizontal sleep surface while in a rest (non-rocking) position.''

We are proposing to include four new graphics that will assist stakeholders in understanding the new requirement. The first is a figure of the ''CAMI Newborn Dummy'' that will be used in the bassinet misassembly test method. In other ASTM standards, the reference to a CAMI Dummy is included at the beginning of the standard in a section titled, ''Referenced Documents.'' Consistent with ASTM custom, we are adding the CAMI Newborn Dummy to this section, accompanied by a footnote to indicate that the figure we are using is copied from a drawing provided by the U.S. Department of Transportation.

We are also proposing to include three other graphics to illustrate: (1) examples of bassinet/cradle key structural elements; (2) the infant CAMI dummy positioned for the bassinet/cradle accessory sleep surface test; and (3) the bassinet/cradle accessory sleep surface test angle measurement.

3. Consultation With the ASTM Play Yard Subcommittee

The requirement we are proposing was created with the assistance of key stakeholders, such as manufacturers, third party test laboratories, consumer advocates, and CPSC staff. In early 2012, we approached the ASTM Play Yard subcommittee and asked that the infant fatality reported to us in August 2011 be reviewed, and, if possible, a requirement be developed to address injuries and fatalities that can result from play yard bassinet accessories that are assembled incorrectly. The subcommittee formed a task group, which met six times from January through April 2012, and was comprised of major stakeholders, including manufacturers, third party test laboratories, consumer advocates, and CPSC staff.

The result of the task group's efforts is the language proposed here and is intended to address the specific hazard that resulted in the death of the infant. The requirement and test method apply only to bassinet accessories, and only address hazards associated with assembling the bassinet without key structural elements.

C. Effective Date of Final Rule

The Administrative Procedure Act (APA) generally requires that the effective date of a rule be at least 30 days after publication of the final rule. 5 U.S.C. 553(d). To allow time for play yard manufacturers to come into compliance, we recommend that this proposed amendment to the play yard standard become effective 6 months after the publication of the final rule in the **Federal Register**. We invite comment on how long it will take play yard manufacturers to come into compliance.

D. Regulatory Flexibility Act

1. Introduction

The Regulatory Flexibility Act (''RFA''), 5 U.S.C. 601–612, requires agencies to consider the impact of proposed rules on small entities, including small businesses. Section 603 of the RFA requires us to prepare an initial regulatory flexibility analysis and make it available to the public for comment when the NPR is published. The initial regulatory flexibility analysis must describe the impact of the proposed rule on small entities. In addition, it must identify any significant alternatives to the proposed rule that would accomplish the stated objectives of the rule and, at the same time, reduce the economic impact on small businesses. Specifically, the initial regulatory flexibility analysis must contain:

- A description of, and where feasible, an estimate of the number of small entities to which the proposed rule will apply;
- A description of the reasons why action by the agency is being considered;
- A succinct statement of the objectives of, and legal basis for, the proposed rule;
- A description of the projected reporting, recordkeeping, and other compliance requirements of the proposed rule, including an estimate of the classes of small entities subject to the requirements, and the type of professional skills necessary for the preparation of reports or records; and
- Identification, to the extent possible, of all relevant federal rules that may duplicate, overlap, or conflict with the proposed rule.

2. The Market

There are 21 domestic firms known to be producing or selling play yards in the United States. Ten are domestic manufacturers, and 11 are domestic importers. Under the U.S. Small Business Administration (SBA) guidelines, a manufacturer of play yards is small if it has 500 or fewer employees, and an importer is considered small if it has 100 or fewer employees. Based on these guidelines, nine domestic manufacturers and 10 domestic importers known to supply play yards to the U.S. market are small businesses. The remaining domestic entities are one large manufacturer and one large importer. There are also three foreign firms supplying play yards to the U.S. market. There may be additional unknown small manufacturers and importers operating in the U.S. market.

3. Impact of the Standard on Small Businesses

Not every play yard manufacturer makes a bassinet accessory for their product. However, the majority of known small play yard manufacturers have a least one model that includes a bassinet accessory. For these firms, in order to meet this proposed requirement, they will have to: (1) Modify their existing designs in order to attach key structural elements to the bassinet accessory permanently, or (2) design the accessory such that it is obviously unusable when any one key structural element is left out.

It is likely that most suppliers will choose to comply with this requirement by attaching key structural elements to the bassinet accessory permanently. We know of one manufacturer who produces a play yard with a bassinet accessory that is already compliant with this requirement. Several of the firms impacted by this new requirement were involved in the ASTM language development process and have indicated that they are moving toward attaching key structural elements to play yard bassinet accessories permanently. The cost to manufacturers who elect to meet the requirement in this way is expected to be minimal, primarily involving additional stitching, rivets, or other methods of attachment.

At least one manufacturer anticipates meeting the requirement by designing the accessory such that it is obviously unusable when key structural elements are left out. This approach is likely to be more costly than permanently attaching key structural elements because, currently, no design has been identified by manufacturers that would succeed in failing visibly when each key structural element is removed individually.

The impact on small importers will be similar. If an importer's existing supplier is not willing to comply with the bassinet misassembly provision, the importer would need to find an alternate source. If that is not possible, these firms could respond to the rule by discontinuing the importation of play yards. The impact of this decision could be mitigated by replacing play yards with a different infant or toddler product. Deciding to import an alternative infant or toddler product would be a reasonable and realistic way to offset any lost revenue.

4. Alternatives

Setting an effective date longer than 6 months could reduce the impact. This would allow small manufacturers additional time to make necessary changes to their product, and it would allow small importers more time to find alternative sources. It would also allow entities to spread costs over a longer period of time.

5. Conclusion of the Initial Regulatory Flexibility Analysis

It is possible that the proposed amendment, if finalized, could have a significant impact on some small businesses. For manufacturers, the extent of these costs could entail expensive product redesign. Importers may need to find alternative sources of play yards or replace play yards with another infant or toddler product.

We invite comments describing:

- The possible impact of this rule on small manufacturers and importers; and
- Significant alternatives to the proposed rule that would accomplish the stated objectives of the proposed rule, and at the same time, reduce the economic impact on small businesses.

E. Paperwork Reduction Act (PRA), 44 U.S.C. 3501–3521

ASTM F406–12a, which is incorporated by reference into the play yard standard codified at 16 CFR part 1221, requires labels and instructions be supplied with the product. The PRA requirements for the play yard standard codified at 16 CFR part 1221 have been submitted to the Office of Management and Budget (OMB), and OMB has assigned control number 3041–0152 to the information collection. We estimate that there are no additional burden hours associated with this proposed amendment.

F. Environmental Considerations

The Commission's regulations address whether we are required to prepare an environmental assessment or an environmental impact statement. Our rules generally have ''little or no potential for affecting the human environment,'' and therefore, they are exempt from any requirement to prepare an environmental assessment or impact statement. 16 CFR 1021.5(c)(1). This rule falls within the categorical exemption.

G. Preemption

Section 26(a) of the Consumer Product Safety Act (CPSA), 15 U.S.C. 2075(a), provides that where a consumer product safety standard is in effect and applies to a product, no state or political subdivision of a state may establish or continue in effect a requirement dealing with the same risk of injury, unless the state's requirement is identical to the federal standard. Section 26(c) of the CPSA also provides that states or

political subdivisions of states may apply to the Commission for an exemption from this preemption under certain circumstances. Section 104(b) of the CPSIA refers to the rules to be issued under that section as ''consumer product safety rules,'' thus, implying that the preemptive effect of section 26(a) of the CPSA would apply. Therefore, a rule issued under section 104 of the CPSIA will invoke the preemptive effect of section 26(a) of the CPSA when the rule becomes effective.

H. Testing and Certification

Pursuant to section 14(a)(2) of the CPSA, play yards must be certified by the manufacturer to the mandatory standard based on testing conducted by a CPSC-accepted third party conformity assessment body. The third party testing and certification requirement for this proposed amendment to the play yard standard will not be in effect until the proposal is final and effective, and we issue a final notice of requirements (NOR). The NOR establishes requirements for how third party conformity assessment bodies can become accepted by us to test play yards. Play yard manufacturers will be required to certify products to the play yard standard, including this proposed amendment if it is finalized, based on third party testing once we have accepted the accreditation of such laboratories.

I. Request for Comments

We invite all interested persons to submit comments on any aspect of the proposed rule. Comments should be submitted in accordance with the instructions in the **ADDRESSES** section at the beginning of this notice.

Specifically, we invite comments on the following:

- Whether this proposed requirement and test method will address the hazards associated with play yard bassinet accessories that can be assembled with missing key structural elements, and if not, what alternative requirements and test methods would address this hazard;
- Whether the second avenue of compliance, referred to as the ''catastrophic failure test'' is necessary, or if manufacturers should be required to attach all key structural elements permanently;
- Whether the CAMI Newborn Dummy, weighing 7.5 pounds, is appropriate to use for the catastrophic failure test, and if it is not, what should be used;
- Whether the language of the proposed requirements and test methods should be changed in order to improve repeatability and clarity, and if so, what those changes should be;
- Whether 6 months is an appropriate effective date for this provision; and
- Descriptions of the possible impact of this proposed requirement on small manufacturers and importers, as well as alternatives to the proposed rule that would accomplish the stated objectives of the proposed rule, and at the same time, reduce the economic impact on small businesses.

List of Subjects in 16 CFR Part 1221

Consumer protection, Imports, Incorporation by reference, Infants and children, Labeling, Law enforcement, Safety, and Toys.

Therefore, the Commission proposes to amend 16 CFR part 1221 as follows:

PART 1221—SAFETY STANDARD FOR PLAY YARDS

1. The authority citation for part 1221 continues to read as follows:

Authority: The Consumer Product Safety Improvement Act of 2008, Pub. L. 110–314, section 104, 122 Stat. 3016 (August 14, 2008).

2. Add § 1221.3 to read as follows:

§ 1221.3 Play yard bassinet accessory misassembly provision.

(a) In addition to complying with section 2.4 of ASTM F406–12a, comply with the following, along with the accompanying footnote:

(1) 2.5 *Other References:* CAMI Newborn Dummy (Department of Transportation, Federal Aviation Administration, Drawing No. SA–1001). (See Fig. A1.38.)

(2) [Reserved]

(b) Instead of complying with section 3.1.9 of ASTM F406–12a, comply with the following:

(1) 3.1.9 *key structural elements,* n—side assemblies, end assemblies, mattress supports, or stabilizing bars that create the occupant retention area, or the components that provide the supporting frame and/or means of attachment for a bassinet/cradle accessory. (See Fig. A1.39.)

(2) [Reserved]

(c) In addition to complying with section 3.1.26 of ASTM F406–12a, comply with the following:

(1) 3.1.27 *bassinet/cradle accessory,* n—a supported sleep surface that attaches to a non-full-size crib or play yard, designed to convert the product into a bassinet/cradle intended to have a horizontal sleep surface while in a rest (non-rocking) position.

(2) [Reserved]

(d) Instead of complying with section 5.19 of ASTM F406–12a, comply with the following:

(1) 5.19 *Bassinet/Cradle Accessories Missing Key Structural Elements:*

(2) 5.19.1 Bassinet/cradle accessories that have all key structural elements attached permanently to the bassinet/cradle accessory, or by any permanent means, prohibiting their removal from the bassinet/cradle accessory, are exempt from the following key structural element requirements. For the purpose of this section, a mattress pad without key structural elements attached permanently is not considered a key structural element.

(3) 5.19.2 Bassinet/cradle accessories that require consumer assembly of key structural element(s), and can be assembled and attached to the product with any key structural element(s) missing, shall meet either 5.19.2.1, or 5.19.2.2 when each key structural element not attached permanently is removed. For the purpose of this section, a mattress pad without key structural elements attached permanently is not considered a key structural element.

(4) 5.19.2.1 The bassinet/cradle accessory shall collapse, such that any part of the mattress pad contacts the bottom floor of the play yard, or is not able to support the newborn CAMI dummy when tested to 8.31.

(5) 5.19.2.2 The bassinet/cradle accessory sleep surface shall tilt by more than 30 degrees when tested to 8.31.

(6) 5.19.3 *Rationale:* The bassinet/cradle missing key structural elements requirements were included to address IDI 110825CAA2853. Bassinet or cradle accessory misassembly initially may not be visually evident to the consumer. If the accessory with omitted component(s) supports the 7 lbm. newborn CAMI dummy without a catastrophic and obvious change to the sleep surface, a consumer might continue to use the accessory and place a child in danger inadvertently.

(e) In addition to complying with 8.30 of ASTM F406–12a, comply with the following:

(1) 8.31 Bassinet and Cradle Accessory Sleep Surface Collapse/Tilt.

(2) 8.31.1 Determine the number of removable (*i.e.,* not attached permanently to the accessory) key structural elements used in the assembly of the bassinet/cradle accessory and number them 1 through *n,* until all removable elements are numbered.

(3) 8.31.2 Assemble the bassinet/cradle accessory to the product according to manufacturer's instructions.

(4) 8.31.3 Establish a horizontal reference plane by placing an inclinometer on the floor of the testing area, and then zero the inclinometer.

(5) 8.31.4 Remove key structural element #1 used in the assembly of the bassinet/cradle accessory, and attempt to assemble the accessory back onto the product.

(6) 8.31.4.1 If the accessory can be assembled onto the product without element #1, proceed to 8.31.5.

(7) 8.31.4.2 If the accessory cannot be assembled onto the product without element #1, the accessory shall be considered to meet 5.19.2. Proceed to 8.31.7.

(8) 8.31.5 Place a newborn CAMI dummy in the center of the sleep surface, oriented parallel to the longest side of the bassinet/cradle accessory. (See Fig. A1.40.) Determine visually whether the bassinet/cradle accessory collapses or it no longer supports the newborn CAMI within 2 seconds.

(9) 8.31.6 If collapse does not occur, measure the sleep surface's angle of incline relative to the horizontal plane established in 8.31.3 at the location(s) most likely to meet the angle requirement in 5.19.2.2. Record this angle. (See Fig. A1.41.)

(10) 8.31.7 Replace the removed key structural element.

(11) 8.31.8 Repeat 8.31.4–8.31.7 removing and replacing each key structural element (identified in 8.31.1) one at a time, starting with #2 through *n* and evaluating the resulting condition.

(f) In addition to Figure A1.37 of ASTM F406–12a, use the following:

BILLING CODE 6355–01–P

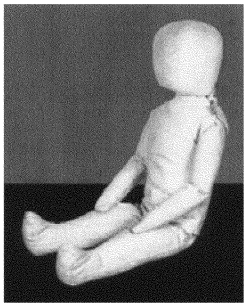

FIG. A1.38 CAMI Newborn Dummy (7.5 lb, 3.4 kg)

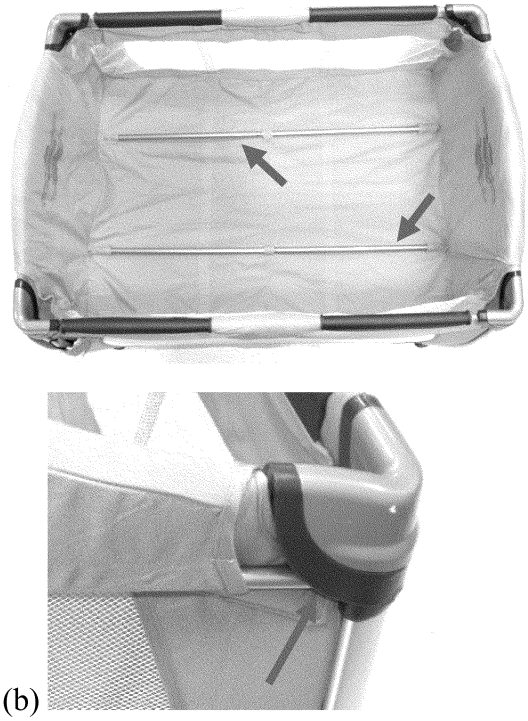

FIG. A1.39 Examples of bassinet/cradle accessory key structural elements: (a) mattress pad support bars and (b) accessory end panel attachment bar.

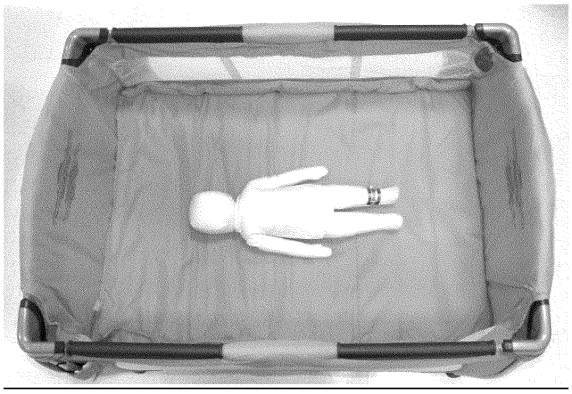

FIG. A1.40 Infant CAMI dummy positioned for bassinet/cradle accessory sleep surface test.

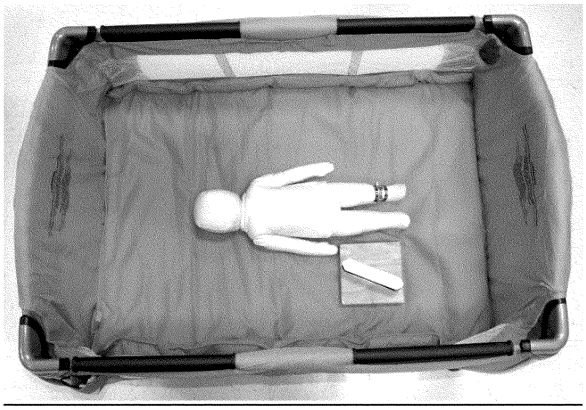

FIG. A1.41 Bassinet/cradle accessory sleep surface test angle measurement.

BILLING CODE 6355–01–C

Dated: August 23, 2012.

Todd A. Stevenson,

Secretary, Consumer Product Safety Commission.

[FR Doc. 2012–21169 Filed 8–28–12; 8:45 am]

BILLING CODE 6355–01–P

ENVIRONMENTAL PROTECTION AGENCY

40 CFR Part 52

[EPA–R09–OAR–2012–0513; FRL–9721–3]

Approval of Air Quality Implementation Plans; California; South Coast Air Quality Management District; Prevention of Significant Deterioration; Greenhouse Gases

AGENCY: Environmental Protection Agency (EPA).

ACTION: Proposed rule.

SUMMARY: EPA is proposing approval of a permitting rule submitted for the South Coast Air Quality Management District (District) portion of the California State Implementation Plan (SIP). The State is required under Part C of title I of the Clean Air Act (CAA or Act) to adopt and implement a SIP-approved Prevention of Significant Deterioration (PSD) permit program. This SIP revision proposes to incorporate District Rule 1714—Prevention of Significant Deterioration for Greenhouse Gases, into the SIP to establish a PSD permit program for pre-construction review of certain new and modified major stationary sources that emit or may emit greenhouse gases (GHGs). Because the State does not currently have a SIP-approved PSD program within the District, the District will continue to be subject to the Federal Implementation Program (FIP) for pollutants other than GHGs that are also subject to the PSD program. Currently, the District issues PSD permits according to the FIP through a delegation agreement with EPA. We are soliciting public comments on this proposal and plan to follow with a final action after consideration of comments received.

DATES: Any comments must be submitted no later than September 28, 2012.

ADDRESSES: Submit comments, identified by docket number EPA–R09–OAR–2012–0513, by one of the following methods:

1. *Federal eRulemaking Portal: www.regulations.gov.* Follow the on-line instructions.
2. *Email: R9airpermits@epa.gov.*
3. *Mail or deliver:* Gerardo Rios (Air-3), U.S. Environmental Protection Agency Region IX, 75 Hawthorne Street, San Francisco, CA 94105–3901.

Instructions: All comments will be included in the public docket without change and may be made available online at *www.regulations.gov*, including any personal information provided, unless the comment includes Confidential Business Information (CBI) or other information the disclosure of which is restricted by statute. Information that you consider to be CBI or otherwise protected should be clearly identified as such and should not be submitted through *www.regulations.gov* or email. *www.regulations.gov* is an ''anonymous access'' system, and EPA will not know your identity or contact information unless you provide it in the body of your comment. If you send

email directly to EPA, your email address will be automatically captured and included as part of the public comment. If EPA cannot read your comment due to technical difficulties and cannot contact you for clarification, EPA may not be able to consider your comment.

Docket: The index to the docket for this action is available electronically at *www.regulations.gov* and in hard copy at EPA Region IX, 75 Hawthorne Street, San Francisco, California. While all documents in the docket are listed in the index, some information may be publicly available only at the hard copy location (e.g., copyrighted material), and some may not be publicly available in either location (e.g., CBI). To inspect the hard copy materials, please schedule an appointment during normal business hours with the contact listed in the **FOR FURTHER INFORMATION CONTACT** section below.

FOR FURTHER INFORMATION CONTACT: Lisa Beckham, Permits Office (AIR–3), U.S. Environmental Protection Agency, Region IX, (415) 972–3811, *beckham.lisa@epa.gov.*

SUPPLEMENTARY INFORMATION: Throughout this document, ''we,'' ''us'' and ''our'' refer to EPA.

Table of Contents

I. The State's Submittal
A. What rule did the State submit?
B. Are there other versions of this rule?
C. What is the purpose of the submitted rule?
II. EPA's Evaluation and Action
A. How is EPA evaluating this rule?
B. Does the rule meet the evaluation criteria?
C. Public comment and proposed action.
III. Statutory and Executive Order Reviews

I. The State's Submittal

A. What rule did the State submit?

Table 1 lists the rule on which we are proposing action along with the dates on which it was adopted by the District and submitted to EPA by the California Air Resources Board (CARB).

TABLE 1—SUBMITTED RULE

Local agency	Rule No.	Rule title	Adopted	Submitted
SCAQMD	1714	Prevention of Significant Deterioration for Greenhouse Gases	11/5/2010	12/30/2010

CAA section 110(k)(1)(B) requires EPA to determine whether a SIP submittal is complete within 60 days of receipt. The December 30, 2010 SIP submittal package was considered complete on March 22, 2011 according to the criteria in Appendix V to 40 CFR Part 51.

B. Are there other versions of this rule?

There are no previous versions of Rule 1714 in the California SIP. The District originally adopted Rule 1714 on November 5, 2010 and it has not been revised since that date.

C. What is the purpose of the submitted rule?

Section 110(a) of the CAA requires states to adopt and submit regulations for the implementation, maintenance and enforcement of the primary and secondary NAAQS. Specifically, section 110(a)(2)(J) requires the state's plan to meet the applicable requirements of section 165 relating to a pre-construction permit program for the prevention of significant deterioration of air quality and visibility protection. The purpose of District Rule 1714—Prevention of Significant Deterioration for Greenhouse Gases is to implement a pre-construction PSD permit program, as required by section 165 of the CAA, for certain new and modified major stationary sources that emit or may emit GHGs. Currently, EPA is the PSD permitting authority within the District because the State does not have a SIP-approved PSD program. However, pursuant to 40 CFR 52.21(u), the District currently issues PSD permits through a delegation agreement between EPA and the District. The District determined that this delegation agreement does not extend to GHGs, so EPA currently administers the GHG portion of 40 CFR 52.21 within the District. Approval of Rule 1714 into the SIP will transfer PSD permitting authority for GHGs from EPA to the District. Rule 1714 would apply only to sources that trigger the PSD program for GHGs. For pollutants other than GHGs that trigger the PSD program, the District will continue to administer the PSD program under the criteria and procedures in the delegation agreement, 40 CFR 52.21, and Part 124 (including the opportunity to petition for review by EPA's Environmental Appeals Board). Upon approval of the District's PSD SIP revision for GHGs, EPA would continue its role of overseeing the District's entire PSD permitting program, including both the delegated program for non-GHG pollutants and the SIP-approved portion for GHGs.

II. EPA's Evaluation and Action

A. How is EPA evaluating this rule?

The relevant statutory and regulatory provisions for our review of the submitted rules include CAA sections 110(a), 110(l), and 165 and 40 CFR 51.166. Section 110(a) requires, among other things, that SIP rules be enforceable, while section 110(l) precludes EPA approval of SIP revisions that would interfere with any applicable requirements concerning attainment and reasonable further progress. Section 165 of the CAA requires states to adopt a pre-construction permitting program for certain new and modified major stationary sources located in attainment or unclassifiable areas. 40 CFR 51.166 establishes the specific requirements for SIP-approved PSD permit programs that must be met to satisfy the requirements of section 165 of the CAA.

B. Does the rule meet the evaluation criteria?

With some exclusions and revisions, Rule 1714 incorporates by reference EPA's PSD permit program, as it pertains to GHGs, at 40 CFR 52.21. We generally consider EPA's PSD permit program at 40 CFR 52.21 to be consistent with the criteria in 40 CFR 51.166. However, we conducted a review of Rule 1714, including additional clarifications regarding procedural requirements provided by the District in a letter to EPA dated August 15, 2012, to ensure that all requirements of 40 CFR 51.166 are met as they pertain to GHGs. Our evaluation is available as an attachment to the technical support document (TSD) for this rulemaking. We also reviewed the revisions the District made to 40 CFR 52.21 that were incorporated by reference into Rule 1714, such as revising certain terms and definitions to reflect that the District, rather than EPA, will be the PSD permitting authority. Based on our review of Rule 1714 and the clarifications in the District's letter of August 15, 2012, we are proposing to find the SIP revision acceptable under CAA sections 110(a), 110(l) and 165 and 40 CFR 51.166.

EPA's TSD for this rulemaking has more information about this rule, including our evaluation and recommendation to approve it into the SIP.

C. Public comment and proposed action

Because EPA believes the submitted rule fulfills all relevant requirements, we are proposing to fully approve it as a revision to the SIP pursuant to section 110(k)(3) of the Act. Specifically, we are proposing to approve District Rule 1714—Prevention of Significant Deterioration, as adopted by the District on November 5, 2010 and submitted by CARB on December 30, 2010.

We will accept comments from the public on this proposal until September 28, 2012.

III. Statutory and Executive Order Reviews

Under the Clean Air Act, the Administrator is required to approve a SIP submission that complies with the provisions of the Act and applicable Federal regulations. 42 U.S.C. 7410(k); 40 CFR 52.02(a). Thus, in reviewing SIP submissions, EPA's role is to approve State choices, provided that they meet the criteria of the Clean Air Act. Accordingly, this proposed action merely approves State law as meeting Federal requirements and does not impose additional requirements beyond those imposed by State law. For that reason, this proposed action:

- Is not a ''significant regulatory action'' subject to review by the Office of Management and Budget under Executive Order 12866 (58 FR 51735, October 4, 1993);
- Does not impose an information collection burden under the provisions of the Paperwork Reduction Act (44 U.S.C. 3501 et seq.);
- Is certified as not having a significant economic impact on a substantial number of small entities under the Regulatory Flexibility Act (5 U.S.C. 601 et seq.);
- Does not contain any unfunded mandate or significantly or uniquely affect small governments, as described in the Unfunded Mandates Reform Act of 1995 (Pub. L. 104–4);
- Does not have Federalism implications as specified in Executive Order 13132 (64 FR 43255, August 10, 1999);
- Is not an economically significant regulatory action based on health or safety risks subject to Executive Order 13045 (62 FR 19885, April 23, 1997);
- Is not a significant regulatory action subject to Executive Order 13211 (66 FR 28355, May 22, 2001);
- Is not subject to requirements of Section 12(d) of the National Technology Transfer and Advancement Act of 1995 (15 U.S.C. 272 note) because application of those requirements would be inconsistent with the Clean Air Act; and
- Does not provide EPA with the discretionary authority to address disproportionate human health or environmental effects with practical, appropriate, and legally permissible methods under Executive Order 12898 (59 FR 7629, February 16, 1994).

In addition, this proposed rule does not have tribal implications as specified by Executive Order 13175 (65 FR 67249, November 9, 2000), because the SIP is not approved to apply in Indian country located in the State, and EPA notes that it will not impose substantial direct costs on tribal governments or preempt tribal law.

List of Subjects in 40 CFR Part 52

Environmental protection, Air pollution control, Greenhouse gases, Incorporation by reference, Intergovernmental relations, Reporting and recordkeeping requirements.

Authority: 42 U.S.C. 7401 et seq.

Dated: August 16, 2012.

Alexis Strauss,

Acting Regional Administrator, Region IX.

[FR Doc. 2012–21338 Filed 8–28–12; 8:45 am]

BILLING CODE 6560–50–P

FEDERAL COMMUNICATIONS COMMISSION

47 CFR Part 54

[WC Docket No. 10–90; DA 12–1199]

Wireline Competition Bureau Seeks Comment on Proposed Urban Rates Survey and Issues Relating to Reasonable Comparability Benchmarks and the Local Rate Floor

AGENCY: Federal Communications Commission.

ACTION: Proposed rule.

SUMMARY: In this document, the Wireline Competition Bureau seeks comment on a proposed survey of urban rates for fixed voice and fixed broadband residential services. The Bureau also seeks comment concerning how, using data from the urban rates survey, to determine the local voice rate floor and the reasonable comparability benchmarks for fixed voice and fixed broadband services.

DATES: Comments are due on or before September 28, 2012.

ADDRESSES: Interested parties may file comments. All pleadings are to reference WC Docket 10–90. Comments may be filed using the Commission's Electronic Filing System (ECFS) or by filing paper copies, by any of the following methods:

- *Electronic Filers:* Comments may be filed electronically using the Internet by accessing the ECFS: *http://fjallfoss.fcc.gov/ecfs2/*.
- *Paper Filers:* Parties who choose to file by paper must file an original and one copy of each filing. If more than one docket or rulemaking number appears in the caption of this proceeding, filers must submit two additional copies for each additional docket or rulemaking number.
- *People with Disabilities:* To request materials in accessible formats for people with disabilities (Braille, large print, electronic files, audio format), send an email to *fcc504@fcc.gov* or call the Consumer & Governmental Affairs Bureau at (202) 418–0530 (voice), (202) 418–0432 (tty).
- In addition, one copy of each pleading must be sent to each of the following:

(1) Jay Schwarz, Industry Analysis and Technology Division, Wireline Competition Bureau, 445 12th Street, SW., 6–A134, Washington, DC 20554; email: *Jay.Schwarz@fcc.gov.*

(2) Alexander Minard, Telecommunications Access Policy Division, Wireline Competition Bureau, 445 12th Street, SW., 5–A334, Washington, DC 20554; email: *Alexander.Minard@fcc.gov.*

FOR FURTHER INFORMATION CONTACT: Jay Schwarz, Wireline Competition Bureau, (202) 418–0948; Alexander Minard, Wireline Competition Bureau, (202) 418–7400, or TTY: (202) 418–0484.

SUPPLEMENTARY INFORMATION: This is a summary of the Public Notice, WC Docket No. 10–90; DA 12–1199, released on July 26, 2012. The full text of this document is available for public inspection during regular business hours in the FCC Reference Center, Room CY–A257, 445 12th Street, SW., Washington, DC 20554. The document may also be purchased from the Commission's duplicating contractor, Best Copy and Printing, Inc. 445 12th Street, SW., Room CY–B402, Washington, DC 20554, telephone number (800) 378–3160 or (202) 863–2898, or via the Internet at *http://www.bcpiweb.com.*

I. Synopsis of Public Notice

1. In this public notice, the Wireline Competition Bureau seeks comment on a proposed survey of urban rates for fixed voice and fixed broadband residential services. The Bureau also seeks comment concerning how, using data from the urban rates survey, to determine the local voice rate floor and the reasonable comparability

benchmarks for fixed voice and fixed broadband services.

2. *Background.* On November 18, 2011 the Commission released the *USF/ICC Transformation Order and FNPRM,* 76 FR 73830 (November 29, 2011), 76 FR 78384 (December 16, 2011), which comprehensively reforms and modernizes the universal service and intercarrier compensation systems. In the *Order,* among other things, the Commission directed the Wireline Competition Bureau and Wireless Telecommunications Bureau to conduct a survey of residential urban rates for fixed voice, fixed broadband, mobile voice, and mobile broadband services. In the *Further Notice,* the Commission sought comment on various issues associated with determining reasonable comparability for voice and broadband rates.

3. The rate survey, conducted once each year, will be used to establish a rate floor that carriers receiving high-cost loop support (HCLS) or high-cost model support must meet in order to receive their full support amounts, beginning in 2014. In addition, the rate survey will be used to develop reasonable comparability benchmarks for voice and broadband rates that carriers will annually certify their rates do not exceed, with the first certification due July 1, 2013.

4. *Content of Rate Survey.* Section A to this Public Notice contains the survey instrument that the Bureau proposes to gather data regarding fixed voice and fixed broadband rates. We seek comment on the details of the proposed rate survey as described below.

5. In the fixed voice section of the survey, the Bureau proposes that providers will separately report non-discounted rates and other charges (i.e. taxes, fees, etc.) for their unlimited or flat-rate local service, unlimited all-distance service, and measured or messaged local service. If the provider does not offer such service, it will indicate as such and not report data for that item. Providers will report rates for both public switched telephone network (PSTN) and Voice over Internet Protocol (VoIP) service, to the extent each is offered. Various non-recurring charges will also be surveyed. We seek comment on the proposed data to be collected in the fixed voice section of the survey.

6. In the fixed broadband section of the survey, the Bureau proposes that providers will separately report non-discounted rates and other charges for four specific advertised speed tiers of broadband service. Are the four proposed speed tiers a reasonable set on which to collect rates? For each offering, the provider will also report on any capacity limits and what action is taken if the capacity limit is reached. Such actions may include overage charges, blocking traffic, and rate limiting. Are there any other service provider practices regarding capacity limits that should be included? Do the survey's questions about capacity limits adequately capture market offerings given the current market for residential, fixed broadband? Is the proposed format appropriate for collecting information on usage-based broadband pricing for fixed services, and, if not, how should the format be modified?

7. The Bureau intends to implement this survey through an online reporting form accessible to those urban providers of fixed voice and broadband services who are selected to participate. Urban providers will be chosen to create a statistically valid sample for the purpose of setting a reasonable comparability benchmark for fixed voice and fixed broadband services and a rate floor for fixed voice service. Independent samples will be chosen for the fixed voice and fixed broadband sections of the survey. The proposed survey will use as a population from which to sample all terrestrial providers of residential voice or broadband services in urban areas. The Bureau proposes defining ''urban'' for the purposes of this survey as all 2010 Census urban areas and urban clusters that sit within a Metropolitan Statistical Area (MSA). We seek comment on this approach.

8. For each section (fixed voice and fixed broadband), urban providers will be chosen in order to generate a statistically valid sample for the purpose of calculating benchmarks and rate floors. Responding providers will be asked for rates in a specified geographic area. We propose specifying, for each surveyed provider, a 2010 Census tract (that is ''urban,'' as explained above) for which rates should be reported. For sampling purposes, the Bureau will use in-house data to determine which providers are serving a Census tract. To aid providers in locating the specified Census tract when completing the survey, the survey will include hyperlinks where the respondent can look up the Census tract on a map. Will this approach allow respondents to easily and accurately report rates?

9. In the interest of simplicity, the proposed survey will not collect rates for bundles of applications (i.e., voice and broadband bundle; voice, broadband, and TV bundle, etc.). The survey will also only collect non-discounted rates that are available to potential customers rather than actual rates paid by existing customers. For the survey's intended purposes, obtaining information about bundles, discounts and promotional pricing of limited duration would unnecessarily increase the complexity and burden of the data collection on service providers that are selected to respond to the survey. We seek comment on this approach.

10. To the extent commenters contend that we should modify the content of the proposed survey, they should specify with particularity how the proposed survey should be altered and explain why their preferred approach better serves to accomplish the Commission's objectives. Should any of the survey's questions or terminology be altered for clarity or accuracy? Should we modify proposed sampling and collection process in any way? Are there any other changes that should be made?

11. *Use of Data for Urban Rate Floor.* The Bureau also seeks comment on how the information collected in the proposed urban rates survey should be used to establish the local rate floor. Historically, the Bureau surveyed local rates (both flat-rate and measured local service) and developed a single urban local rate average. For purposes of the rate floor, we propose to use the urban flat local rate data to derive a population-weighted national urban average that will be used as the local rate floor in 2014 and updated annually thereafter. We seek comment on this proposal.

12. *Use of Data for Reasonable Comparability of Voice Service.* In the *USF/ICC Transformation Order,* the Commission required that carriers certify that their voice rates are within two standard deviations of ''the national average'' for voice service. We request comment on how rate survey data should be used to determine this national average.

13. For fixed voice service, the Bureau seeks comment on deriving the national average for rate comparability purposes solely from data collected regarding local, flat rate voice service in urban areas. Alternatively, should we instead develop the national average based solely on urban data for unlimited, all-Distance service, as determined from the survey? A reason to adopt a national average based on the urban unlimited, all-distance rates rather than the local, flat rate is that the unlimited, all-distance service best reflects the varied ways—in terms of call frequency, duration, and distance—that households typically communicate using voice services. We seek comment on these two alternatives and the implications of each in terms of the ability of carriers to meet the certification requirement. Under

either approach, we propose to develop a population-weighted average. We seek comment on this approach. How, if at all, should we take into account non-recurring charges when computing the fixed voice benchmark?

14. The Bureau proposes to establish a single benchmark for fixed voice service by which supported carriers would certify their rates, for purposes of reasonable comparability, regardless of the voice service offered (i.e. flat, local; unlimited, all-distance; measured local). One reason for doing so is that the urban availability of some services may diminish over time and reduce the available sample population for a given service. This in turn could increase the year-to-year variability in the benchmarks, while also creating, as a statistical artifact, wide deviations in the benchmarks for different types of voice services.

15. Another alternative would be to develop a separate national average for each voice service surveyed (i.e. flat, local; unlimited, all distance; measured, local). To the extent commenters believe the Bureau should establish multiple, service-specific reasonable comparability benchmarks for voice rather than simply developing a single average for urban voice service, they should explain why such an approach is preferable and consistent with the framework established by the Commission in the *USF/ICC Transformation Order.* The Bureau also proposes not combining multiple service rates collected in the survey into a single benchmark because this would require weighting each service's rate by its number of subscribers. Collecting such subscriber information would unnecessarily impose more burden on the carriers surveyed. To the extent commenters contend that the Bureau should combine multiple services' rates into a single benchmark, how should the rates be combined and what measures could be taken to minimize burden on those providers that are surveyed?

16. The *Further Notice* sought comment on whether to adopt a presumption that if a given provider is offering the same rates, terms and conditions (including capacity limits) to both urban and rural customers, that is sufficient to meet the statutory requirement that services be reasonably comparable. Under such a presumption, providers that serve both rural and urban markets would not be required to certify their voice rates against a national urban benchmark derived from the proposed rate survey. We seek further focused comment on this potential approach. In particular, commenters are encouraged to identify the universe of providers that would be able to utilize the presumption, under the proposed survey approach that would define urban areas as MSAs.

17. *Calculation of Voice Rates for Certifying Carriers Offering Measured Service.* We also seek comment on how a fixed voice provider offering only measured service will determine its rate that should be compared to the national urban average for voice service, for purposes of rate comparability. The Bureau proposes allowing such carriers to calculate a ''blended'' rate which will be compared to the national urban rate voice average, consistent with the approach adopted by the Commission for purposes of the local rate floor. In particular, we propose that a supported carrier with measured service should use its average minutes of use data during each rate period (e.g. peak, off-peak) to calculate its rate for reasonable comparability purposes. We seek comment on this approach.

18. *Use of Data for Reasonable Comparability of Fixed Broadband Service.* To the extent there were a presumption that offering the same service in both rural and urban areas meets the reasonable comparability requirements of the statute, there would be no need for some providers to compare their broadband rates to a national average urban rate benchmark derived from the results of the proposed rate survey. For fixed broadband, the Bureau proposes using the surveyed rate data for each speed tier to set reasonable comparability benchmarks for those providers that are required to certify against a national urban benchmark. Each speed tier would have its own benchmark, and providers would certify their rates against the speed tier corresponding to the slowest broadband service they offer. We are proposing to establish different benchmarks for different speed tiers so that supported providers offering substantially faster broadband service than the minimum required under the Commission's public interest obligations can certify their rates against a more comparable urban service, rather than an urban benchmark for a much slower service or an average of rates for both slower and faster services. We seek comment on this approach. Would such an approach be a workable way to determine reasonable comparability for providers that do not offer broadband services in urban areas?

19. Alternatively, should the several speed tiers be combined to form a single benchmark? How, if at all, should we take into account non-recurring charges when computing the fixed broadband benchmark? How, if at all, should the capacity limit data be used for determining reasonable comparability? Given the emergence of usage-based broadband pricing, how should such rates be incorporated into the benchmark? Should the Bureau collect usage data on such plans so a ''blended'' rate can be calculated? How might a supported broadband provider with a usage-based service certify its rates?

II. Procedural Matters

20. *Filing Requirements.* Pursuant to §§ 1.415 and 1.419 of the Commission's rules, interested parties may file comments on or before the dates indicated on the first page of this document. Comments may be filed using the Commission's Electronic Comment Filing System (ECFS).

21. Filings can be sent by hand or messenger delivery, by commercial overnight courier, or by first-class or overnight U.S. Postal Service mail. All filings must be addressed to the Commission's Secretary, Office of the Secretary, Federal Communications Commission.

- All hand-delivered or messenger-delivered paper filings for the Commission's Secretary must be delivered to FCC Headquarters at 445 12th St. SW., Room TW–A325, Washington, DC 20554. The filing hours are 8:00 a.m. to 7:00 p.m. All hand deliveries must be held together with rubber bands or fasteners. Any envelopes and boxes must be disposed of *before* entering the building.
- Commercial overnight mail (other than U.S. Postal Service Express Mail and Priority Mail) must be sent to 9300 East Hampton Drive, Capitol Heights, MD 20743.
- U.S. Postal Service first-class, Express, and Priority mail must be addressed to 445 12th Street SW., Washington, DC 20554.

22. The proceeding this Notice initiates shall be treated as a ''permit-but-disclose'' proceeding in accordance with the Commission's *ex parte* rules. Persons making *ex parte* presentations must file a copy of any written presentation or a memorandum summarizing any oral presentation within two business days after the presentation (unless a different deadline applicable to the Sunshine period applies). Persons making oral *ex parte* presentations are reminded that memoranda summarizing the presentation must (1) list all persons attending or otherwise participating in the meeting at which the *ex parte* presentation was made, and (2) summarize all data presented and arguments made during the presentation. If the presentation

consisted in whole or in part of the presentation of data or arguments already reflected in the presenter's written comments, memoranda or other filings in the proceeding, the presenter may provide citations to such data or arguments in his or her prior comments, memoranda, or other filings (specifying the relevant page and/or paragraph numbers where such data or arguments can be found) in lieu of summarizing them in the memorandum. Documents shown or given to Commission staff during *ex parte* meetings are deemed to be written *ex parte* presentations and must be filed consistent with rule § 1.1206(b). In proceedings governed by rule § 1.49(f) or for which the Commission has made available a method of electronic filing, written *ex parte* presentations and memoranda summarizing oral *ex parte* presentations, and all attachments thereto, must be filed through the electronic comment filing system available for that proceeding, and must be filed in their native format (*e.g.,* .doc, .xml, .ppt, searchable .pdf). Participants in this proceeding should familiarize themselves with the Commission's *ex parte* rules.

23. *Paperwork Reduction Act.* This document contains proposed new information collection requirements. The new requirements will be submitted to the Office of Management and Budget (OMB) for review under section 3507(d) of the Paperwork Reduction Act (PRA). The Bureau, as part of its continuing effort to reduce paperwork burdens, invites the general public and OMB to comment on the information collection requirements contained in this document, as required by the Paperwork Reduction Act of 1995, Public Law 104–13. In addition, pursuant to the Small Business Paperwork Relief Act of 2002, Public Law 107–198, see 44 U.S.C. 3506(c)(4), the Bureau seeks specific comment on how it might further reduce the information collection burden for small business concerns with fewer than 25 employees.

24. *Initial Regulatory Flexibility Analysis.* As required by the Regulatory Flexibility Act of 1980 (RFA), the Bureau has prepared this Initial Regulatory Flexibility Analysis (IRFA) of the possible significant economic impact on a substantial number of small entities by the policies and rules proposed in this Notice. Written comments are requested on this IRFA. Comments must be filed as responses to the IRFA and must be filed by the deadlines for comments on the Public Notice. The Commission will send a copy of the Public Notice, including this IRFA, to the Chief Counsel for Advocacy of the Small Business Administration (SBA). In addition, the Public Notice and IRFA (or summaries thereof) will be published in the **Federal Register**.

A. Need for, and Objectives of, the Proposed Rules

25. The Public Notice seeks comment on a proposed survey of urban rates for fixed voice and fixed broadband residential services. The Bureau also seeks comment concerning how, using data from the urban rates survey, to determine the local voice rate floor and the reasonable comparability benchmarks for fixed voice and fixed broadband services. The rate survey, and benchmarks and rate floors based on the survey, is part of implementing the *USF/ICC Transformation Order* to insure supported provider's rates are not unreasonably high or unnecessarily low.

B. Legal Basis

26. The legal basis for any action that may be taken pursuant to the Notice is contained in sections 1, 2, 4(i), 214, 254, 303(r), 403, and 706 of the Communications Act of 1934, as amended, 47 U.S.C. 151, 152, 154(i), 214, 254, 303(r), 403, and 706, and §§ 1.1 and 1.1421 of the Commission's rules, 47 CFR 1.1, 1.421.

C. Description and Estimate of the Number of Small Entities to Which the Proposed Rules Will Apply

27. The RFA directs agencies to provide a description of, and where feasible, an estimate of the number of small entities that may be affected by the proposed rules, if adopted. The RFA generally defines the term ''small entity'' as having the same meaning as the terms ''small business,'' ''small organization,'' and ''small governmental jurisdiction.'' In addition, the term ''small business'' has the same meaning as the term ''small-business concern'' under the Small Business Act. A small-business concern'' is one which: (1) Is independently owned and operated; (2) is not dominant in its field of operation; and (3) satisfies any additional criteria established by the SBA.

28. *Small Businesses.* Nationwide, there are a total of approximately 27.5 million small businesses, according to the SBA.

29. *Wired Telecommunications Carriers.* The SBA has developed a small business size standard for Wired Telecommunications Carriers, which consists of all such companies having 1,500 or fewer employees. According to Census Bureau data for 2007, there were 3,188 firms in this category, total, that operated for the entire year. Of this total, 3,144 firms had employment of 999 or fewer employees, and 44 firms had employment of 1000 employees or more. Thus, under this size standard, the majority of firms can be considered small.

30. *Local Exchange Carriers (LECs).* Neither the Commission nor the SBA has developed a size standard for small businesses specifically applicable to local exchange services. The closest applicable size standard under SBA rules is for Wired Telecommunications Carriers. Under that size standard, such a business is small if it has 1,500 or fewer employees. According to Commission data, 1,307 carriers reported that they were incumbent local exchange service providers. Of these 1,307 carriers, an estimated 1,006 have 1,500 or fewer employees and 301 have more than 1,500 employees. Consequently, the Commission estimates that most providers of local exchange service are small entities, that may be affected by the rules and policies proposed in the Public Notice.

31. *Incumbent Local Exchange Carriers (incumbent LECs).* Neither the Commission nor the SBA has developed a size standard for small businesses specifically applicable to incumbent local exchange services. The closest applicable size standard under SBA rules is for Wired Telecommunications Carriers. Under that size standard, such a business is small if it has 1,500 or fewer employees. According to Commission data, 1,307 carriers reported that they were incumbent local exchange service providers. Of these 1,307 carriers, an estimated 1,006 have 1,500 or fewer employees and 301 have more than 1,500 employees. Consequently, the Commission estimates that most providers of incumbent local exchange service are small businesses that may be affected by rules adopted pursuant to the Public Notice.

32. We have included small incumbent LECs in this present RFA analysis. As noted above, a ''small business'' under the RFA is one that, *inter alia,* meets the pertinent small business size standard (e.g., a telephone communications business having 1,500 or fewer employees), and ''is not dominant in its field of operation.'' The SBA's Office of Advocacy contends that, for RFA purposes, small incumbent LECs are not dominant in their field of operation because any such dominance is not ''national'' in scope. We have therefore included small incumbent LECs in this RFA analysis, although we emphasize that this RFA action has no effect on Commission analyses and determinations in other, non-RFA contexts.

33. *Competitive Local Exchange Carriers (competitive LECs), Competitive Access Providers (CAPs), Shared-Tenant Service Providers, and Other Local Service Providers.* Neither the Commission nor the SBA has developed a small business size standard specifically for these service providers. The appropriate size standard under SBA rules is for the category Wired Telecommunications Carriers. Under that size standard, such a business is small if it has 1,500 or fewer employees. According to Commission data, 1,442 carriers reported that they were engaged in the provision of either competitive local exchange services or competitive access provider services. Of these 1,442 carriers, an estimated 1,256 have 1,500 or fewer employees and 186 have more than 1,500 employees. In addition, 17 carriers have reported that they are Shared-Tenant Service Providers, and all 17 are estimated to have 1,500 or fewer employees. In addition, 72 carriers have reported that they are Other Local Service Providers. Of the 72, seventy have 1,500 or fewer employees and two have more than 1,500 employees. Consequently, the Commission estimates that most providers of competitive local exchange service, competitive access providers, Shared-Tenant Service Providers, and Other Local Service Providers are small entities that may be affected by rules adopted pursuant to the Public Notice.

34. *Wireless Telecommunications Carriers (except Satellite).* Since 2007, the SBA has recognized wireless firms within this new, broad, economic census category. Prior to that time, such firms were within the now-superseded categories of Paging and Cellular and Other Wireless Telecommunications. Under the present and prior categories, the SBA has deemed a wireless business to be small if it has 1,500 or fewer employees. For this category, census data for 2007 show that there were 1,383 firms that operated for the entire year. Of this total, 1,368 firms had employment of 999 or fewer employees and 15 had employment of 1000 employees or more. Similarly, according to Commission data, 413 carriers reported that they were engaged in the provision of wireless telephony, including cellular service, Personal Communications Service (PCS), and Specialized Mobile Radio (SMR) Telephony services. Of these, an estimated 261 have 1,500 or fewer employees and 152 have more than 1,500 employees. Consequently, the Commission estimates that approximately half or more of these firms can be considered small. Thus, using available data, we estimate that the majority of wireless firms can be considered small.

35. *Local Multipoint Distribution Service.* Local Multipoint Distribution Service (''LMDS'') is a fixed broadband point-to-multipoint microwave service that provides for two-way video telecommunications. The auction of the 986 LMDS licenses began and closed in 1998. The Commission established a small business size standard for LMDS licenses as an entity that has average gross revenues of less than $40 million in the three previous calendar years. An additional small business size standard for ''very small business'' was added as an entity that, together with its affiliates, has average gross revenues of not more than $15 million for the preceding three calendar years. The SBA has approved these small business size standards in the context of LMDS auctions. There were 93 winning bidders that qualified as small entities in the LMDS auctions. A total of 93 small and very small business bidders won approximately 277 A Block licenses and 387 B Block licenses. In 1999, the Commission re-auctioned 161 licenses; there were 32 small and very small businesses winning that won 119 licenses.

36. *Cable and Other Program Distribution.* Since 2007, these services have been defined within the broad economic census category of Wired Telecommunications Carriers; that category is defined as follows: ''This industry comprises establishments primarily engaged in operating and/or providing access to transmission facilities and infrastructure that they own and/or lease for the transmission of voice, data, text, sound, and video using wired telecommunications networks. Transmission facilities may be based on a single technology or a combination of technologies.'' The SBA has developed a small business size standard for this category, which is: all such firms having 1,500 or fewer employees. According to Census Bureau data for 2007, there were a total of 955 firms in this previous category that operated for the entire year. Of this total, 939 firms had employment of 999 or fewer employees, and 16 firms had employment of 1000 employees or more. Thus, under this size standard, the majority of firms can be considered small and may be affected by rules adopted pursuant to the Public Notice.

37. *Cable Companies and Systems.* The Commission has developed its own small business size standards, for the purpose of cable rate regulation. Under the Commission's rules, a ''small cable company'' is one serving 400,000 or fewer subscribers, nationwide. Industry data indicate that, of 1,076 cable operators nationwide, all but eleven are small under this size standard. In addition, under the Commission's rules, a ''small system'' is a cable system serving 15,000 or fewer subscribers. Industry data indicate that, of 7,208 systems nationwide, 6,139 systems have under 10,000 subscribers, and an additional 379 systems have 10,000–19,999 subscribers. Thus, under this second size standard, most cable systems are small and may be affected by rules adopted pursuant to the Public Notice.

38. *Cable System Operators.* The Act also contains a size standard for small cable system operators, which is ''a cable operator that, directly or through an affiliate, serves in the aggregate fewer than 1 percent of all subscribers in the United States and is not affiliated with any entity or entities whose gross annual revenues in the aggregate exceed $250,000,000.'' The Commission has determined that an operator serving fewer than 677,000 subscribers shall be deemed a small operator, if its annual revenues, when combined with the total annual revenues of all its affiliates, do not exceed $250 million in the aggregate. Industry data indicate that, of 1,076 cable operators nationwide, all but ten are small under this size standard. We note that the Commission neither requests nor collects information on whether cable system operators are affiliated with entities whose gross annual revenues exceed $250 million, and therefore we are unable to estimate more accurately the number of cable system operators that would qualify as small under this size standard.

39. *Open Video Services.* The open video system (''OVS'') framework was established in 1996, and is one of four statutorily recognized options for the provision of video programming services by local exchange carriers. The OVS framework provides opportunities for the distribution of video programming other than through cable systems. Because OVS operators provide subscription services, OVS falls within the SBA small business size standard covering cable services, which is ''Wired Telecommunications Carriers.'' The SBA has developed a small business size standard for this category, which is: all such firms having 1,500 or fewer employees. According to Census Bureau data for 2007, there were a total of 955 firms in this previous category that operated for the entire year. Of this total, 939 firms had employment of 999 or fewer employees, and 16 firms had employment of 1000 employees or more. Thus, under this second size standard, most OVS operators are small

and may be affected by rules adopted pursuant to the Public Notice. In addition, we note that the Commission has certified some OVS operators, with some now providing service. Broadband service providers (''BSPs'') are currently the only significant holders of OVS certifications or local OVS franchises. The Commission does not have financial or employment information regarding the entities authorized to provide OVS, some of which may not yet be operational. Thus, again, at least some of the OVS operators may qualify as small entities.

40. *Internet Service Providers.* Since 2007, these services have been defined within the broad economic census category of Wired Telecommunications Carriers; that category is defined as follows: ''This industry comprises establishments primarily engaged in operating and/or providing access to transmission facilities and infrastructure that they own and/or lease for the transmission of voice, data, text, sound, and video using wired telecommunications networks. Transmission facilities may be based on a single technology or a combination of technologies.'' The SBA has developed a small business size standard for this category, which is: all such firms having 1,500 or fewer employees. According to Census Bureau data for 2007, there were 3,188 firms in this category, total, that operated for the entire year. Of this total, 3144 firms had employment of 999 or fewer employees, and 44 firms had employment of 1000 employees or more. Thus, under this size standard, the majority of firms can be considered small. In addition, according to Census Bureau data for 2007, there were a total of 396 firms in the category Internet Service Providers (broadband) that operated for the entire year. Of this total, 394 firms had employment of 999 or fewer employees, and two firms had employment of 1000 employees or more. Consequently, we estimate that the majority of these firms are small entities that may be affected by rules adopted pursuant to the Public Notice.

D. Description of Projected Reporting, Recordkeeping, and Other Compliance Requirements for Small Entities

41. In this Public Notice, the Commission seeks public comment on a proposed survey of urban rates for fixed voice and fixed broadband residential services. The Bureau also seeks comment concerning how, using data from the urban rates survey, to determine the local voice rate floor and the reasonable comparability benchmarks for fixed voice and fixed broadband services. The Public Notice seeks comment on data requirements that would require reporting by small entities. Specifically, the Public Notice seeks comment on the collection of advertised rates and product offerings from small entities in urban areas that are included in the sample.

E. Steps Taken To Minimize the Significant Economic Impact on Small Entities, and Significant Alternatives Considered

42. The RFA requires an agency to describe any significant, specifically small business, alternatives that it has considered in reaching its proposed approach, which may include the following four alternatives (among others): ''(1) The establishment of differing compliance or reporting requirements or timetables that take into account the resources available to small entities; (2) the clarification, consolidation, or simplification of compliance and reporting requirements under the rules for such small entities; (3) the use of performance rather than design standards; and (4) an exemption from coverage of the rule, or any part thereof, for such small entities.''

43. The Public Notice seeks comment on issues related to the rates survey and how the benchmarks and rate floors should be determined. The rate survey issues are not anticipated to have a significant economic impact on small entities because the survey will only sample a small number of providers. Furthermore, since the statistical sampling methodology will result in larger entities being more likely to be surveyed, we anticipate small entities will only compose a minor portion of the overall sample. Moreover, the survey only asks about advertised rates and product offerings which should be readily available to entities of any size. Furthermore, any significant economic impact cannot necessarily be minimized through alternatives since the survey sample will already be restricted to a small set of the total population of carriers necessary for generating a statistically valid sample, and the survey will only ask for readily available advertised rates and will be implemented in an easily accessible online format.

F. Federal Rules That May Duplicate, Overlap, or Conflict With the Proposed Rules

44. None.

Federal Communications Commission.

Trent B. Harkrader,

Division Chief, Telecommunications Access Policy Division Wireline Competition Bureau.

Proposed Rate Survey Questions for Fixed Services Sections of Rate Survey

Note: The below survey instrument is intended to be implemented via an online interface accessible to survey participants. The particular format used in this appendix is for explanatory purposes only.

III. Survey Respondent Information

This survey asks questions about PROVIDER NAME's (FIXED VOICE, FIXED BROADBAND, MOBILE) services and rates. Please answer all questions as they pertain to the specific geographic location indicated below on MONTH DAY, YEAR.

Enter identifying information below as it pertain to the location identified in the bottom line of Section I.

I. SURVEY RESPONDENT INFORMATION	
Provider Name: Provider FRN (used on Dec 31, 2011 Form 477): Provider Study Area Code (if current USF recipient): Name of Person Completing Form: Contact Phone Number: Contact Email Address: Name of Certifying Official: Certifying Official's Phone Number: Certifying Official's Email Address:	*Pre-populated by FCC*
Location for Which Reported Rates Apply:	*Pre-populated by FCC*

IV. Fixed Voice

Report rates on *fixed voice service* provided in GEOGRAPHIC LOCATION. All reported rates should be non-discounted, residential rates available on MONTH DAY, YEAR to any existing or potential customer at the specified location. Report rates for fixed voice service that is *not* bundled with any other product (e.g. Internet, TV).

II. FIXED VOICE INFORMATION

Indicate which fixed voice plan types are offered and whether the service is available to customers through circuit switched, VoIP or both.

II.a Does this carrier offer unlimited or flat-rate local voice service?	Yes - circuit switched, VoIP?	No
II.b Does this carrier offer unlimited or flat-rate, all-distance service?	Yes - circuit switched, VoIP?	No
II.c Does this carrier offer measured/metered local voice service?	Yes - circuit switched, VoIP?	No

For each service offered (as indicated "Yes" in II-a, II-b, and II-c), report each component of the rate in dollar and cents amounts. If both PSTN and VoIP service is offered, answer questions separately as prompted for each service. "All-distance" services include only domestic calling, not international.

(Answered separately, as appropriate, for PSTN and VoIP)

II.d - Monthly Rates	**Unlimited or Flat-Rate Local Service (II-a)**	**Unlimited All-Distance Service (II-b)**	**Measured or Messaged Local Service (II-c)**
II.d.1 Recurring service charge (without SLC)			
II.d.2 Federal subscriber line charge (SLC), if any			
II.d.3 Access Recovery Charge (ARC), if any			
II.d.4 Federally tariffed local number portability (LNP) surcharge, if any			
II.d.5 Federal universal service surcharge on Fed. SLC, LNP or			

ARC, if any			
II.d.6 State SLC, if any			
II.d.7 State USF charge, if any			
II.d.8 Mandatory extended area service (EAS) charges, if any			
II.d.9 Other mandatory surcharges (such as gross receipts tax) accounted as company revenue and not included elsewhere			
II.d.10 Tax or surcharge for funding 911 service			
II.d.11 Interstate telecommunications relay service (TRS or relay)			
II.d.12 State TRS			
II.d.13 Total other taxes (such as sales, excise, etc.) levied on customers by state, county, local governments.			
II.d.14 Federal excise tax on local service		NA	
II.d.15 Number of voice calls or message units included in monthly rate if measured service (local service area calls only)	NA	NA	
II.d.16 Dollar calling allowance for voice calls included in monthly rate if measured service (local service area calls only).	NA	NA	

11.d.17 Peak period local rate per unit (minute or call/message) once allowance exceed, if measured service.	NA	NA	Indicate if rate is per call or per minute
11.d.18 Off-peak period local rate per unit (minute or call/message) once allowance exceeded, if measured service.	NA	NA	Indicate if rate is per call or per minute
II.e - Service Initiation Charges			
II.e.1 Total connection charge for residential service if no premises visit is required.			
II.e.2 Minimum additional charge if drop line and terminal block are needed to connect service. Do not include any inside wiring charges.			
II.e.3 Mandatory surcharges on connection accounted as company revenue			
II.e.4 State, county, and local taxes and surcharges on connection			
II.e.5 Other mandatory connection charges			

V. Fixed Broadband

Report rates on *fixed broadband service* provided in GEOGRAPHIC LOCATION. All reported rates should be standard, non-discounted, residential rates available on MONTH DAY, YEAR to any existing or potential customer. Report rates for fixed broadband service that is not bundled with any other product (e.g. telephone, TV). Exclude residential broadband service that is provided via satellite.

III. BROADBAND INTERNET SERVICE INFORMATION		
III.a Does this provider offer a standalone broadband Internet service with advertised data transfer speeds in the following ranges? Note that the service must meet both the download and upload speed criteria.		
III.a.1 SERVICE RANGE 1: Download: at or above 4 Mbps and less than 6 Mbps; Upload: at or above 1 Mbps and less than 1.5 Mbps	Yes	No
III.a.2 SERVICE RANGE 2: Download: at or above 6 Mbps and less than 10 Mbps; Upload: at or above 1.5 Mbps and less than 2 Mbps	Yes	No
III.a.3 SERVICE RANGE 3: Download: at or above 10 Mbps and less than 25 Mbps; Upload: at or above 2 Mbps and less than 3 Mbps	Yes	No
III.a.4 SERVICE RANGE 4: Download: at or above 25 Mbps; Upload: at or above 3 Mbps	Yes	No
-		
III.b If the provider offers at least one standalone service in the specified range, report in Mbps the advertised download and upload speeds of the slowest service meeting the criteria of the service range. Also, report each capacity limit (in GB) applied to the service, if any. If multiple capacity limits are available for the same service speed, list each separately. If only one capacity limit is offered, only report this limit. A capacity limit is the level at which the ISP begins to block, rate-limit, or charge excess fees for additional data transmission. If no limit is applied, enter		

"Unlimited." For each capacity limit in place, indicate what action is taken when the limit is reached. If a capacity limit is based on a customer's use relative to other customers, report the data amount for which the limit would be reached as of MONTH DAY, 2012.

Note: For services with capacity limits, a drop down box will offer a menu of actions the ISP will take once the limit is reached. These include: "Overage Charge," "Blocking Traffic", "Rate-limiting," and "Other (explain)."

SERVICE RANGE 1

Advertised Speed (Mbps)		Capacity Limit(s) (GB)	Action Taken When Limit Reached
Download	Upload	1	1
		2	2
		3	3

SERVICE RANGE 2

Advertised Speed (Mbps)		Capacity Limit(s) (GB)	Action Taken When Limit Reached
Download	Upload	1	1
		2	2
		3	3

SERVICE RANGE 3

Advertised Speed (Mbps)	Capacity Limit(s) (GB)	Action Taken When Limit Reached

Download	Upload		
		1	1
		2	2
		3	3

SERVICE RANGE 4

Advertised Speed (Mbps)		**Capacity Limit(s) (GB)**	**Action Taken When Limit Reached**
Download	Upload	1	1
		2	2
		3	3

For each service offered (as indicated "Yes" in III.a.1 to III.a.4), report each component of the rate in dollar and cents amounts. Reported monthly rates should be standard, non-discounted residential rates. In some cases, this may be the month-to-month rate available to a customer not eligible for introductory rates, etc.

	SERVICE RANGE			
III.c - Recurring Access Rates	**1**	**2**	**3**	**4**
III.c.1 Recurring monthly charge				
III.c.2 Total of state, local, and municipal taxes				
III.c.3 Total of all other mandatory fees and taxes (such as provider surcharges, etc.) passed through.				
III.c.4 Surcharges on the service accounted as company revenue (i.e. non-pass through)				

For each item listed, report the minimum amount a customer would pay for each non-recurring charge in the event the item was required for the customer to access the Internet via the broadband service. If an item is not offered by the provider, then mark it as "NA".

	SERVICE RANGE			
III.d - Non-Recurring Charges (Minimums)	**1**	**2**	**3**	**4**
III.d.1 Activation or Connection not requiring a service visit to the premises				
III.d.2 Activation or connection requiring a service visit (but assuming the premises is already physically wired)				
III.d.3 Does this service require the customer use a modem or other hardware?	Yes/No	Yes/No	Yes/No	Yes/No
III.d.4 If "Yes" for III.h.3, what is the purchase price for necessary hardware? (If provider sells such hardware.)				
III.d.5 If "Yes" for III.h.3, what is the monthly rental price for necessary hardware? (If provider rents hardware.)				
III.d.6 Computer/laptop hook-up by service technician already making a service visit.				

[FR Doc. 2012–21311 Filed 8–28–12; 8:45 am]
BILLING CODE 6712–01–C

FEDERAL COMMUNICATIONS COMMISSION

47 CFR Part 73

[MB Docket No. 12–225; RM–11668; DA 12–1316]

Radio Broadcasting Services; Greenup, IL

AGENCY: Federal Communications Commission.

ACTION: Proposed rule.

SUMMARY: This document requests comments on a petition for rulemaking filed by Word Power, Inc., proposing to allot Channel 230A at Greenup, Illinois, and reserve it for noncommercial educational use. A staff engineering analysis indicates that Channel *230A can be allotted to Greenup consistent with the minimum distance separation requirements of the Rules, with a site restriction 4.6 kilometers (2.9 miles) southwest of the community. The reference coordinates are 39–12–38 NL and 88–11–15 WL.

DATES: Comments must be filed on or before October 1, 2012, and reply comments on or before October 16, 2012.

ADDRESSES: You may submit comments, identified by Docket No. 12–225 by any of the following methods:

▪ *Federal Communications Commission's Web Site: http://fjallfoss.fcc.gov/ecfs2/.* Follow the instructions for submitting comments.

▪ *People with Disabilities:* Contact the FCC to request reasonable accommodations (accessible format documents, sign language interpreters, CART, etc.) by email: *FCC504@fcc.gov* or phone: 202–418–0530 or TTY: 202–418–0432.

In addition to filing comments with the FCC, interested parties should serve the petitioner as follows: Mark N. Lipp, Esq., Counsel for Word Power, Inc., Wiley Rein LLP, 1776 K St. NW., Washington, DC 20006. For detailed instructions for submitting comments and additional information on the rulemaking process, see the **SUPPLEMENTARY INFORMATION** section of this document.

FOR FURTHER INFORMATION CONTACT: Rolanda F. Smith, Media Bureau, (202) 418–2700.

SUPPLEMENTARY INFORMATION: This is a synopsis of the Commission's *Notice of Proposed Rule Making,* MB Docket No. 12–225, adopted August 9, 2012, and released August 10, 2012. The full text of this Commission decision is available for inspection and copying during normal business hours in the FCC's Reference Information Center at Portals II, CY–A257, 445 Twelfth Street SW., Washington, DC 20554. This document may also be purchased from the Commission's duplicating contractors, Best Copy and Printing, Inc., 445 12th Street SW., Room CY–B402, Washington, DC 20554, telephone 1–800–378–3160 or via email *www.BCPIWEB.com.* This document does not contain proposed information collection requirements subject to the Paperwork Reduction Act of 1995, Public Law 104–13. In addition, therefore, it does not contain any proposed information collection burden ''for small business concerns with fewer than 25 employees,'' pursuant to the Small Business Paperwork Relief Act of 2002, Public Law 107–198, *see* 44 U.S.C. 3506(c)(4).

Provisions of the Regulatory Flexibility Act of 1980 do not apply to this proceeding.

Members of the public should note that from the time a Notice of Proposed Rulemaking is issued until the matter is no longer subject to Commission consideration or court review, all *ex parte* contacts are prohibited in Commission proceedings, such as this one, which involve channel allotments. See 47 CFR 1.1204(b) for rules governing permissible *ex parte* contacts.

For information regarding proper filing procedures for comments, see 47 CFR 1.415 and 1.420.

List of Subjects in 47 CFR Part 73

Radio, Radio broadcasting.

Federal Communications Commission.

Nazifa Sawez,

Assistant Chief, Audio Division, Media Bureau.

For the reasons discussed in the preamble, the Federal Communications Commission proposes to amend 47 CFR part 73 as follows:

PART 73—RADIO BROADCAST SERVICES

1. The authority citation for part 73 continues to read as follows:

Authority: 47 U.S.C. 154, 303, 334, 336 and 339.

§ 73.202 [Amended]

2. Section 73.202(b), the Table of FM Allotments under Illinois, is amended by adding Channel *230A at Greenup.

[FR Doc. 2012–21315 Filed 8–28–12; 8:45 am]

BILLING CODE 6712–01–P

DEPARTMENT OF THE INTERIOR

Fish and Wildlife Service

50 CFR Part 17

[Docket No. FWS–R6–ES–2012–0052; 4500030113]

Endangered and Threatened Wildlife and Plants; 90-Day Finding on a Petition To List Mimulus gemmiparus (Rocky Mountain Monkeyflower) as Endangered or Threatened and To Designate Critical Habitat

AGENCY: Fish and Wildlife Service, Interior.

ACTION: Notice of petition finding and initiation of status review.

SUMMARY: We, the U.S. Fish and Wildlife Service (Service), announce a 90-day finding on a petition to list *Mimulus gemmiparus* (Rocky Mountain monkeyflower; also known as budding monkeyflower, or Weber's monkeyflower) as an endangered or threatened species throughout its entire range and to designate critical habitat under the Endangered Species Act of 1973, as amended (Act). For the purposes of this document, we will refer to *Mimulus gemmiparus* as Rocky Mountain monkeyflower. Based on our review, we find that the petition presents substantial scientific or commercial information indicating that listing Rocky Mountain monkeyflower may be warranted. Therefore, with the publication of this notice, we will be initiating a review of the status of the species to determine whether listing Rocky Mountain monkeyflower is warranted. To ensure that this status review is comprehensive, we are requesting scientific and commercial data and other information regarding this species. Based on the status review, we will issue a 12-month finding on the petition, which will address whether the petitioned action is warranted, as provided in section 4(b)(3)(B) of the Act. We will make a determination on critical habitat for this species if and when we initiate a listing action.

DATES: To allow us adequate time to conduct this review, we request that we receive information on or before October 29, 2012. The deadline for submitting an electronic comment using the Federal eRulemaking Portal (see **ADDRESSES** section, below) is 11:59 p.m. Eastern Time on this date. After October 29, 2012, you must submit information directly to the Division of Policy and Directives Management (see **ADDRESSES** section below). Please note that we might not be able to address or incorporate information that we receive after the above requested date.

ADDRESSES: You may submit information by one of the following methods:

(1) *Electronically:* Go to the Federal eRulemaking Portal: *http://www.regulations.gov.* Search for Docket No. FWS–R6–ES–2012–0052, which is the docket number for this action. You may submit a comment by clicking on ''Comment Now!''

(2) *By hard copy:* Submit by U.S. mail or hand-delivery to: Public Comments Processing, Attn: FWS–R6–ES–2012–0052; Division of Policy and Directives Management; U.S. Fish and Wildlife Service; 4401 N. Fairfax Drive, MS 2042–PDM; Arlington, VA 22203.

We will not accept email or faxes. We will post all information we receive on *http://www.regulations.gov.* This generally means that we will post any personal information you provide us (see the Request for Information section below for more details).

FOR FURTHER INFORMATION CONTACT: Patty Gelatt, Western Colorado Supervisor, Ecological Services, 764 Horizon Drive, Bldg. B, Grand Junction, CO 81506–3946; telephone (970) 243–

2778; fax (970) 245–6933. If you use a telecommunications device for the deaf (TDD), please call the Federal Information Relay Service (FIRS) at (800) 877–8339.

SUPPLEMENTARY INFORMATION:

Request for Information

When we make a finding that a petition presents substantial information indicating that listing a species may be warranted, we are required to promptly review the status of the species (status review). For the status review to be complete and based on the best available scientific and commercial information, we request information on Rocky Mountain monkeyflower from governmental agencies, the scientific community, industry, and any other interested parties. We seek information on:

(1) The species' biology, range, and population trends, including:

(a) Habitat requirements;

(b) Genetics and taxonomy;

(c) Historical and current range, including distribution patterns;

(d) Historical and current population levels, and current and projected trends; and

(e) Past and ongoing conservation measures and programs for the species, its habitat, or both.

(2) The factors that are the basis for making a listing determination for a species under section 4(a) of the Act (16 U.S.C. 1531 *et seq.*), which are:

(a) The present or threatened destruction, modification, or curtailment of its habitat or range;

(b) Overutilization for commercial, recreational, scientific, or educational purposes;

(c) Disease or predation;

(d) The inadequacy of existing regulatory mechanisms; or

(e) Other natural or manmade factors affecting its continued existence.

If, after the status review, we determine that listing Rocky Mountain monkeyflower is warranted, we will propose critical habitat (see definition in section 3(5)(A) of the Act), in accordance with section 4 of the Act, to the maximum extent prudent and determinable at the time we propose to list the species. Therefore, we also request data and information on:

(1) What may constitute ''physical or biological features essential to the conservation of the species'' within the geographical range currently occupied by the species;

(2) Where these features are currently found;

(3) Whether any of these features may require special management considerations or protection;

(4) Specific areas outside the geographical area occupied by the species that are ''essential for the conservation of the species''; and

(5) What, if any, critical habitat you think we should propose for designation if the species is proposed for listing, and why such habitat meets the requirements of section 4 of the Act.

Please include sufficient information with your submission (such as scientific journal articles or other publications) to allow us to verify any scientific or commercial information you include.

Submissions merely stating support for or opposition to the action under consideration without providing supporting information, although noted, will not be considered in making a determination. Section 4(b)(1)(A) of the Act directs that determinations as to whether any species is an endangered or threatened species must be made ''solely on the basis of the best scientific and commercial data available.''

You may submit your information concerning this status review by one of the methods listed in the **ADDRESSES** section. If you submit information via *http://www.regulations.gov,* your entire submission—including any personal identifying information—will be posted on the Web site. If your submission is made via a hardcopy that includes personal identifying information, you may request at the top of your document that we withhold this personal identifying information from public review. However, we cannot guarantee that we will be able to do so. We will post all hardcopy submissions on *http://www.regulations.gov.*

Information and supporting documentation that we received and used in preparing this finding will be available for public inspection at *http://www.regulations.gov,* or by appointment, during normal business hours, at the U.S. Fish and Wildlife Service, Western Colorado Ecological Services Field Office (see **FOR FURTHER INFORMATION CONTACT**).

Background

Section 4(b)(3)(A) of the Act requires that we make a finding on whether a petition to list, delist, or reclassify a species presents substantial scientific or commercial information indicating that the petitioned action may be warranted. We are to base this finding on information provided in the petition, supporting information submitted with the petition, and information otherwise available in our files. To the maximum extent practicable, we are to make this finding within 90 days of our receipt of the petition and publish our notice of the finding promptly in the **Federal Register**.

Our standard for substantial scientific or commercial information within the Code of Federal Regulations (CFR) with regard to a 90-day petition finding is ''that amount of information that would lead a reasonable person to believe that the measure proposed in the petition may be warranted'' (50 CFR 424.14(b)). If we find that substantial scientific or commercial information was presented, we are required to promptly commence a review of the status of the species, which is subsequently summarized in our 12-month finding.

Petition History

On October 4, 2011, we received a petition dated September 30, 2011, prepared by WildEarth Guardians (petitioner) requesting that Rocky Mountain monkeyflower be given immediate protection and listed as an endangered or threatened species under the Act and that we designate critical habitat for the species. The petition clearly identified itself as such and included the requisite identification information for the petitioners, as required at 50 CFR 424.14(a).

In a December 20, 2011, letter to WildEarth Guardians, we responded that we reviewed the information presented in this and eight other petitions that we received in September and October of 2011 (Alt 2011, entire). We noted that these petitions will be considered submitted within Fiscal Year 2011 for purposes of accounting under our multidistrict litigation settlement and its petition cap provision, which limits the number of petitions that WildEarth Guardians may submit each fiscal year.

We also noted that emergency listing of a species is not a petitionable action under the Administrative Procedure Act or the Endangered Species Act (Act); therefore, we treat requesting emergency listing solely as a petition to list a species under the Act. We stated in the letter to the petitioners that, while we had not made a decision on whether the petition presents substantial information that the petitioned actions may be warranted, we had looked at the immediacy of possible threats to the species to determine if emergency listing may be necessary at this time. Our initial review of the petition indicated that an emergency situation does not exist for this species. However, if at any time conditions change and we determine emergency listing is necessary, an emergency rule may be developed. We stated that we are currently required to complete a significant number of listing and critical

habitat actions by the end of Fiscal Year 2016 pursuant to court orders, judicially approved settlement agreements, and other statutory deadlines. We said we may conduct a review of this petition prior to that time should budget and workload permit. This finding addresses the petition.

Previous Federal Actions

Rocky Mountain monkeyflower was included in the 1985 Review of Plant Taxa for Listing as Endangered or Threatened Species (50 FR 39526, September 27, 1985). In that document, we included the species as a Category 2 candidate, based on our evaluation at that time. Category 2 candidates were species for which the Service had information indicating that protection under the Act may be warranted but for which we lacked sufficient information on status and threats to determine if elevation to ''Category-1 candidate'' status was warranted. We published our decision to discontinue candidate categories and to restrict candidate status to those taxa for which we have sufficient information to support issuance of a proposed rule on December 5, 1996 (61 FR 64481). This decision resulted in the deletion of Rocky Mountain monkeyflower from the list of candidate taxa for listing.

In 2009, we published a 90-day finding on 165 species from a petition to list 206 species, including Rocky Mountain monkeyflower (74 FR 6122, February 5, 2009). We found that the petition did not present substantial scientific or commercial information indicating that listing Rocky Mountain monkeyflower may be warranted. The information we reviewed for the species described one or more threats for a general area, but did not link the threats to the species or the habitat occupied by the species. We were subsequently petitioned to list this species on October 4, 2011. This finding is in response to that petition.

Species Information

Species Description and Taxonomy

Ruth Ashton Nelson discovered Rocky Mountain monkeyflower in 1950 (Beatty *et al.* 2003, p. 13). The species was identified and described by William A. Weber (Weber 1972, pp. 423–425). Taxonomic classification of the genus *Mimulus* has been changed from the family Scrophulariaceae to the family Phrymaceae (Beardsley and Olmstead 2002, p. 1098; Olmstead 2002, pp. 16, 18, 21, 22). We consider Rocky Mountain monkeyflower to be a valid species and, therefore, a listable entity under the Act (ITIS 2012, p. 1).

Rocky Mountain monkeyflower is a small annual herb 1 to 10 centimeters (cm) (0.4 to 4 inches (in.)) tall, weak, and somewhat fleshy (Weber 1972, p. 423), with a hairless, usually unbranched, stem. Leaves are opposite, entire, oval in shape, and hairless, and will grow to 10 millimeters (mm) (0.4 in.) long and 7 mm (0.3 in.) wide. Leaf stems are 2 to 3 mm (about 0.11 in.) long, with a small pocket at the base that contains a dormant embryonic shoot called a bulbil or gemma, which reproduces vegetatively (Spackman *et al.* 1999a; Spackman *et al.* 1999b, p. 34; Moody *et al.,* 1999, p. 1521). Rocky Mountain monkeyflower plants do not usually have flowers, but they can produce flowers and seeds in laboratory conditions (Beardsley 1997, p. 3). The solitary yellow flowers are about 5 mm (0.20 in.) long, with spreading petals and an open throat (Beatty *et al.* 2003, p. 14); they bloom in mid-July.

Life History

The asexual gemmae of Rocky Mountain monkeyflower are dispersed when the parent plant dies, and are capable of overwintering in the soil and germinating the following spring. The flat, lens-shaped gemmae float down slope in seepage water and tend to collect in drifts in sites suitable for germination (Weber 1972, p. 3). Thus, the species behaves like an annual, but with asexually produced bulbils carrying out the function of seeds (Steingraeber and Beardsley 2005, p. 2). This particular method of reproduction and development is unique within the genus *Mimulus,* and probably unique within all flowering plants (Beardsley *et al.* 2004, p. 487; Moody *et al.* 1999, p. 1522).

Habitat

Rocky Mountain monkeyflower is a montane to subalpine species that grows at elevations of 2,572 to 3,413 meters (m) (8,438 to 11,198 feet (ft)) (CNHP 2011b, p. 1). Plants grow primarily on substrates of granite with surface seepage water and on moist forest soils near seeps, waterfalls, and springs. Often they are protected by granite overhangs, on south- or west-facing aspects, and are associated with mosses and ferns (CNHP 2012, p. 2).

Distribution and Abundance

Rocky Mountain monkeyflower is currently known from seven populations in five counties (Boulder, Clear Creek, Grand, Jefferson, and Larimer) along the Front Range of the Rocky Mountains in Colorado. As noted in the petition, one additional population in Rocky Mountain National Park (RMNP) is no longer considered extant. The species' estimated range is 2,519 square kilometers (972 square miles) (CNHP 2011a, p. 3). The total estimated occupied habitat is about 10.5 hectares (ha) (26 acres (ac)) (CNHP 2011a, p. 3). Actual occupied area as measured on the ground during surveys within the documented populations is 168 square meters (sq m) (1,808 sq ft) (Steingraeber and Beardsley 2005, p. 22). Estimated total abundance is about 126,000 plants (Steingraeber and Beardsley 2005, pp. 9, 22).

TABLE 1—SUMMARY OF CURRENTLY KNOWN POPULATIONS

[Steingraeber and Beardsley 2005, pp. 9, 22]

Site name	Estimated number of plants	Area occupied in square meters (square feet)	Management
St. Vrain	14,660	68 (732)	USFS
Hankins Gulch	102,000	13 (140)	USFS
Guanella Pass	600	10 (108)	USFS
Horseshoe Park	3,200	38 (409)	RMNP
North Inlet	4,400	25 (269)	RMNP
East Inlet	800	13 (140)	RMNP
Staunton State Park	73	1 (11)	CDNR
Total	125,733	168 (1,808)	

CDNR = Colorado Department of Natural Resources.

Conservation Status

NatureServe ranks Rocky Mountain monkeyflower as a ''G1'' species (critically imperiled globally and at very high risk of extinction) (NatureServe 2010, p. 1). The Colorado Natural Heritage Program (CNHP) ranks the species as ''S1'' (critically endangered throughout its range in Colorado) (CNHP 2011, p. 1). The USFS, Rocky Mountain Region (Region 2) has designated Rocky Mountain monkeyflower as a sensitive species (Beatty *et al.* 2003, p. 3). USFS objectives for designated sensitive species are to develop and implement management practices to ensure that species do not become endangered or threatened species because of USFS actions (Wrigley *et al.* 2007, p. 3).

Evaluation of Information for This Finding

Section 4 of the Act (16 U.S.C. 1533) and its implementing regulations at 50 CFR part 424 set forth the procedures for adding a species to, or removing a species from, the Federal Lists of Endangered and Threatened Wildlife and Plants. A species may be determined to be an endangered or threatened species due to one or more of the five factors described in section 4(a)(1) of the Act:

(A) The present or threatened destruction, modification, or curtailment of its habitat or range;

(B) Overutilization for commercial, recreational, scientific, or educational purposes;

(C) Disease or predation;

(D) The inadequacy of existing regulatory mechanisms; or

(E) Other natural or manmade factors affecting its continued existence.

In considering what factors might constitute threats, we must look beyond the mere exposure of the species to the factor to determine whether the species responds to the factor in a way that causes actual impacts to the species. If there is exposure to a factor, but no response, or only a positive response, that factor is not a threat. If there is exposure and the species responds negatively, the factor may be a threat and we then attempt to determine how significant a threat it is. If the threat is significant, it may drive or contribute to the risk of extinction of the species such that the species may meet the definition of endangered or threatened under the Act. This does not necessarily require empirical proof of a threat. The combination of exposure and some corroborating evidence of how the species is likely impacted could suffice. The mere identification of factors that could impact the species negatively may not be sufficient to compel a substantial finding. The information must contain evidence sufficient to suggest that these factors may be operative threats that act on the species to the point that the species may meet the definition of an endangered or threatened species under the Act.

In making this 90-day finding, we evaluated whether information regarding threats to Rocky Mountain monkeyflower, as presented in the petition and other information available in our files, is substantial, thereby indicating that the petitioned action may be warranted. Our evaluation of this information is presented below.

A. The Present or Threatened Destruction, Modification, or Curtailment of Its Habitat or Range

Recreation, Trails, and Roads

Information Provided in the Petition

The petitioner states that recreational activities are the primary threats to the habitat for Rocky Mountain monkeyflower (CNHP 2011a, p. 3). Nearly all known locations are near trails and roads subject to impacts from hikers, people fishing, horses, dogs, off-road vehicles (except in wilderness locations), or road and trail maintenance activity (Beatty *et al.* 2003, p. 3). Habitat for the plants also provides good camping and shelter areas, given their proximity to trails, water, and protective overhangs. Resulting impacts include crushed plants, disturbed soil, and diversion of water away from the plants, as well as introduction of weedy species that compete with Rocky Mountain monkeyflower (Beatty *et al.* 2003, p. 3). A hiking trail bisects one population in RMNP (Beatty *et al.* 2003, p. 28). The location in Hankins Gulch is about 2 m (6 ft) from a trail, where observers saw clusters of Rocky Mountain monkeyflower trampled by human, dog, and horse footprints (Beardsley 1997, p. 221). One of the other locations in RMNP is used as a latrine and rest stop by hikers (Beatty *et al.* 2003, p. 28). The waterfall area where Rocky Mountain monkeyflower occurs in Staunton State Park will likely be a popular destination for visitors when the park opens to the public (Beatty *et al.* 2003, p. 28). The park opening is expected before the end of 2012. Road improvement and construction activities at Guanella Pass could change the amount of water available to Rocky Mountain monkeyflower at that location (Beatty *et al.* 2003, p. 12; CFLHD 2009, entire).

Evaluation of Information Provided in the Petition and Available in Service Files

Information cited in the petition and available in our files is consistent with the petitioners' assertions that recreational activities have caused documented impacts to the habitat for Rocky Mountain monkeyflower as well as to the plants (CNHP 2011a, p. 3). At least 54 percent of the known occupied habitat for the species, which supports about 88 percent of the documented plants, is highly vulnerable to trampling of plants and the moist soils they grow on (Steingraeber and Beardsley 2005, pp. 9, 22). The trail through the large Hankins Gulch population, where observers saw clusters of Rocky Mountain monkeyflower trampled by human, dog, and horse footprints (Beardsley 1997, p. 221), was rerouted to the other side of the creek in 2011, to protect the plants (Olson in Anderson *et al.* 2011, p. 19). Information on the current status of this population is not in our files. Plant surveyors have found new locations that were inaccessible by trail, but they have been unsuccessful at detecting the plant at similar remote sites. Four areas of additional suitable habitat have been identified but not surveyed (Steingraeber and Beardsley 2005, p. 8). All four are near known locations and within the known range of the species. We will use all information available at the time we conduct our status review to determine the total percent of suitable habitat that may be subject to impacts by recreational use.

Information in our files shows that inadvertent trampling due to off-trail hiking, rock climbing, and scrambling is likely to impact this species in Staunton State Park, because the species is found in areas that are attractive to visitors (Beatty *et al.* 2003, p. 29). A 2007 survey report noted that ''a park visitor could easily stop for a break near the waterfall and unknowingly eliminate nearly the entire population by settling down in the wrong area'' (Colorado State Parks 2010, p. 5). However, because the park is not yet open to public use, we do not have substantial scientific or commercial information in our files, nor was any provided by the petitioners, indicating that trampling by recreational users is a threat to the Staunton State Park population of Rocky Mountain monkeyflower. We will analyze this potential threat in more detail in our status review for the species.

Although we do not have substantial information that trampling may be a threat to the Rocky Mountain monkeyflower in Staunton State park, this population comprises only a small

portion of the species' total known numbers. The majority (88 percent) of documented plants and 54 percent of the known occupied habitat are in areas near roads and trails commonly used for hiking and other recreational and maintenance activities, where the plants are considered highly vulnerable to trampling. Additionally, Rocky Mountain monkeyflower is a small, fragile, and inconspicuous plant that is highly susceptible to inadvertent trampling and is unlikely to withstand such impacts. Therefore, we find there is substantial information overall to indicate that trampling by recreational users may pose a threat to the species.

Human Population Growth

Information Provided in the Petition

The petitioners point out that all Rocky Mountain monkeyflower locations are close to large human populations that have grown significantly over the last several decades along the Colorado Front Range Urban Corridor, and are projected to increase another 26.5 percent by 2025 (State Demography Office 2011, entire). This increased population may have significant impacts on Rocky Mountain monkeyflower locations due to increased recreational use of public lands.

Evaluation of Information Provided in the Petition and Available in Service Files

References cited by the petitioners support their assertion that recent and projected population growth within day-trip distance of Rocky Mountain monkeyflower habitat is likely to occur. Although it is likely that an increasing human population will result in an increase in visitor use of the surrounding areas, and that heavier use of the trails where the species is located would increase the likelihood of plant damage and habitat disturbance, we have no substantial information to show that this may pose a threat to the species at this time. We will analyze this potential threat in more detail in our status review for the species.

Livestock and Herbivore Grazing

Information Provided in the Petition

The petitioners state that Rocky Mountain monkeyflower plants may be trampled and their habitat degraded by excessively large herds of elk (*Cervus elaphus*) in RMNP that are overutilizing willow (*Salix* spp.) thickets and aspen (*Populus tremuloides*) stands that provide habitat for Rocky Mountain monkeyflower (RMNP 2009, entire).

Evaluation of Information Provided in the Petition and Available in Service Files

References cited by the petitioners support their assertion that large elk herds are degrading willow and aspen stands near Rocky Mountain monkeyflower habitat. However, available information does not show substantial evidence of direct impacts by elk on the seeps and stream habitat where Rocky Mountain monkeyflower occurs (Beatty *et al.* 2003, pp. 26–27). Therefore, we find that there is not substantial information to indicate that livestock and herbivore grazing may pose a threat to the species. We will evaluate this factor more thoroughly during our status review.

Changes in Natural Regimes

Information Provided in the Petition

The petitioners list wildfires, drought, rockfalls, flash floods, global warming, erosion, blow-downs, and timber harvests as impacts that can alter the hydrology, topography, soils, or shading of Rocky Mountain monkeyflower habitat (Beatty *et al.* 2003, p. 28). They cite a report of areas intensely burned by wildfire that were observed within 9 to 12 m (30 to 40 ft) of the Rocky Mountain monkeyflower population at Hankins Gulch in 2003 (Steingraeber and Beardsley 2005, p. 9). While the riparian location of Rocky Mountain monkeyflower protected it from direct fire impacts, ecology of the site was reportedly altered in its hydrology and vegetation, as were possibly soils, water runoff, erosion, and deposition of biotic mass (Beatty *et al.* 2003, p. 28).

According to the petitioner, loss of Rocky Mountain monkeyflower habitat has been documented in RMNP (2007b, p. 3). There has been a 69 percent reduction in surface water, as well as lowered water tables, attributed to the loss of beaver (*Castor canadensis*), which has led to a significant decline in montane riparian willows (RMNP 2007b, p. 3). Like willows, the riparian habitat occupied by Rocky Mountain monkeyflower is more dependent on groundwater from streams and snowmelt than from rainfall. The petitioners say it is reasonable to conclude that the same factors responsible for declining willow populations may impact Rocky Mountain monkeyflower.

Evaluation of Information Provided in the Petition and Available in Service Files

Information cited in the petition and available in our files is consistent with the petitioners' description of impacts to Rocky Mountain monkeyflower habitat due to natural events. An intense wildfire and subsequent drying of soil and erosion by water runoff occurred at the largest known population of Rocky Mountain monkeyflower (Hankins Gulch) in 2002 (Steingraeber and Beardsley 2005, p. 9). The petitioner's descriptions of lowered water tables and reduced surface water in RMNP are based on reports from the park (RMNP 2007b, p. 3). The conclusion that Rocky Mountain monkeyflower populations will decline from lack of groundwater in the same way that willows have is reasonable. However, we have no information in our files to show that reduced groundwater for willow and aspen habitat due to lack of beaver ponds is affecting the seeps and drainages on shaded slopes that support Rocky Mountain monkeyflower habitat. Therefore, we find that there is not substantial information to indicate that changes in natural regimes may pose a threat to the species. We will evaluate this factor more thoroughly during our status review.

Climate Change

Information Provided in the Petition

The petitioner states that the western United States will likely suffer a decrease in water resources due to climate change, which will affect montane and subalpine ecosystems in RMNP and across Colorado. In support of this assertion, they cite conclusions from the Intergovernmental Panel on Climate Change (IPCC) (2007, p. 52) and RMNP (2007a, p. 6). The IPCC projected that warming in western mountains will cause decreased snowpack and reduced summer flows (IPCC 2007, p. 52). RMNP postulates that the subalpine ecosystem will change due to dramatic disturbances, such as fire and insects, and from more gradual processes, such as warming temperatures (RMNP 2007a, p. 13). Regional changes in precipitation play a major role in large-scale fires in subalpine forests, which take place during extreme regional drought conditions. Increased numbers or intensities of fires could have a damaging impact on Rocky Mountain monkeyflower, easily destroying entire populations. Tree community composition will likely shift within the subalpine zone. For instance, north-facing hillsides may no longer be moist enough to support *Pseudotsuga menziesii* (Douglas fir) regeneration (RMNP 2007a, p. 13), or Rocky Mountain monkeyflower. ''Mountain ecosystems such as those found in RMNP could shift upslope, reducing habitat for many subalpine species.

Changes in rainfall and snowfall could alter streamflows and affect wetlands and wildlife'' (Environmental Protection Agency 1997, p. 4). The petitioners assert that, as a montane and subalpine plant that depends on seeps and streams for survival, reproduction, and dispersal, Rocky Mountain monkeyflower will likely be adversely affected by reductions in stream flows and decreases in habitat acreage.

Evaluation of Information Provided in the Petition and Available in Service Files

Our analyses under the Act include consideration of ongoing and projected changes in climate. The terms ''climate'' and ''climate change'' are defined by the IPCC. ''Climate'' refers to the mean and variability of different types of weather conditions over time, with 30 years being a typical period for such measurements, although shorter or longer periods also may be used (IPCC 2007, p. 78). The term ''climate change'' thus refers to a change in the mean or variability of one or more measures of climate (e.g., temperature or precipitation) that persists for an extended period, typically decades or longer, whether the change is due to natural variability, human activity, or both (IPCC 2007, p. 78). Various types of changes in climate can have direct or indirect effects on species. These effects may be positive, neutral, or negative, and they may change over time, depending on the species and other relevant considerations, such as the effects of interactions of climate with other variables (e.g., habitat fragmentation) (IPCC 2007, pp. 8–14, 18–19). In our analyses, we use our expert judgment to weigh relevant information, including uncertainty, in our consideration of various aspects of climate change.

Sources cited by the petitioners and in our files support their assertion that climate change is occurring and likely to continue to occur within Rocky Mountain monkeyflower habitat. However, the petition did not present information on the species' likely response to these changes. The response of species to climate change can be extremely complex, and we have no information in our files on the actual or likely response of Rocky Mountain monkeyflower. We think it possible that, as a montane and subalpine plant that disperses generally by gemmae floating downstream, Rocky Mountain monkeyflower will likely be adversely affected by decreases in range and upward shifts in its suitable habitat. Because Rocky Mountain monkeyflower depends on a constant source of moisture for survival, reproduction, and dispersal, reduction in stream flows may affect its survival. Because the climate is expected to become warmer and drier, habitat for Rocky Mountain monkeyflower may diminish, and fire danger will likely increase. High fire risk is more than a theoretical threat for this species, because two major fires have occurred within the past 4 years in and near two of the populations. Overall, the information regarding the species' response to climate change appears speculative in nature, and therefore we find that there is not substantial information to indicate that the effects of climate change may pose a threat to Rocky Mountain monkeyflower. However, we will analyze this potential threat in more detail during our status review of the species.

Summary of Factor A

Information provided in the petition, as well as available information in our files, presents substantial scientific or commercial information indicating that trampling by recreational users may pose a threat to the Rocky Mountain monkeyflower. Habitat alteration and destruction of plants due to trampling may pose a threat to at least 54 percent of the known occupied habitat for the species, supporting about 88 percent of the documented plants, which are located near roads or trails used for recreational and maintenance activities. The biology of Rocky Mountain monkeyflower as a small, fragile, and inconspicuous plant makes it highly susceptible to inadvertent trampling and means that the plant is unlikely to withstand such impacts. Therefore, the petition and information in our files presents substantial scientific or commercial information indicating that the present or threatened destruction, modification, or curtailment of its habitat or range may be a threat to Rocky Mountain monkeyflower.

B. Overutilization for Commercial, Recreational, Scientific, or Educational Purposes

Neither the petition nor information within our files presents substantial scientific or commercial information indicating that overutilization for commercial, recreational, scientific, or educational purposes may present a threat to Rocky Mountain monkeyflower.

C. Disease or Predation

Neither the petition nor information within our files presents substantial scientific or commercial information indicating that disease or predation may present a threat to Rocky Mountain monkeyflower.

D. The Inadequacy of Existing Regulatory Mechanisms

Information Provided in the Petition

The petitioners state that current regulatory mechanisms are inadequate to protect the documented populations of Rocky Mountain monkeyflower. Habitat for the known populations is managed by RMNP, USFS, and CDNR. The petitioners claim that the efforts by these agencies to balance conflicting interests with conservation and survival of sensitive species threatens Rocky Mountain monkeyflower. Populations in the RMNP are protected under National Park Service (NPS) guidelines in general, which prohibit the collection of any native plants without a permit, but RMNP also provides recreational opportunities that negatively affect Rocky Mountain monkeyflower (Steingraeber and Beardsley 2005, p. 10). A hiking trail bisects one population in the park, and another location is used as a latrine and rest stop by hikers (Beatty *et al.* 2003, p. 28).

The petitioners point out that Rocky Mountain monkeyflower is designated as a USFS Region 2 sensitive species. As such, the species may obtain some protection under various conservation strategies designed to protect plants and animals within Federal lands. USFS policies require a biological evaluation to assess project impacts to sensitive species and prohibit collection of sensitive plants without a permit. On the other hand, the USFS has a statutory, multiple-use mandate governing its land management activities. Some authorized activities on USFS lands, such as timber harvesting, cattle grazing, and recreational uses, may affect Rocky Mountain monkeyflower. The petitioners assert that balancing these other interests with the species' survival threatens Rocky Mountain monkeyflower. The petitioners assert that populations in wilderness areas within the forest are still threatened by recreational activities. As an example, they cite information concerning the population at Hankins Gulch (in Lost Creek Wilderness Area) about 2 m (6 ft) from a trail, where observers saw clusters of Rocky Mountain monkeyflower trampled by human, dog, and horse footprints (Beardsley 1997, p. 221). The petitioners say that this trail was expected to be rerouted in 2011 to avoid damage to the plant (USFS 2011, p. 1), and also that Staunton State Park managers were expected to consider Rocky Mountain monkeyflower in their

land use plans (Beatty 2003, p. 12), but they do not mention whether these actions have been implemented.

Evaluation of Information Provided in the Petition and Available in Service Files

Information cited in the petition and available in our files is not sufficient to support the claim that existing regulations for management of designated sensitive plant species on RMNP- and USFS-managed lands may be inadequate to protect Rocky Mountain monkeyflower. Adequacy of the management plan for Staunton State Park cannot be considered because it consists of ''non-regulatory protective designations that are intended to promote the conservation of sensitive resources through voluntary measures and proactive partnerships'' (Colorado State Parks 2010, Appendix A. p. 2). Voluntary measures in the Staunton State Park management plan have yet to be implemented, and the new park is not yet open to the public.

The NPS Organic Act of 1916 (16 U.S.C. 1 *et seq.*), as amended, states that the NPS ''shall promote and regulate the use of the Federal areas known as national parks, * * * to conserve the scenery and the national and historic objects and the wild life therein and to provide for the enjoyment of the same in such manner and by such means as will leave them unimpaired for the enjoyment of future generations.'' To meet these obligations, ''the National Park Service will inventory, monitor, and manage state and locally listed species in a manner similar to its treatment of federally listed species to the greatest extent possible. In addition, the [Park] Service will inventory other native species that are of special management concern to parks (such as rare, declining, sensitive, or unique species and their habitats) and will manage them to maintain their natural distribution and abundance'' (San Miguel 2011, p. 5). We do not have information readily available in our files to indicate that RMNP has a management plan specific to Rocky Mountain monkeyflower, or whether any protective measures have been taken to restrict hikers from trampling plants and habitat along the trails, or digging latrines in the soft soil where the plants grow. Steingraeber and Beardsley (2005, p. 10) reported that RMNP had not rerouted trails or monitored impacts to Rocky Mountain monkeyflower populations. We have no recent information in our files to show whether the Organic Act regulations are adequate to protect Rocky Mountain monkeyflower from the threat of trampling by hikers in RMNP.

The National Forest Management Act (16 U.S.C. 1600 *et seq.*) directs the USFS, as part of the land use planning process, to manage for protection of scientific values and protect wildlife habitat. The USFS Sensitive Species Management directive states that sensitive species of native plants and animals must receive special management emphasis to ensure their viability and to preclude trends toward endangerment that would result in the need for Federal listing (USFS 2002, p. 1). On USFS land, the trail at Hankins Gulch was rerouted in 2011 to avoid the plant population (Anderson *et al.* 2011, p. 19). Although we do not yet have monitoring results to show whether implementation of the regulations has reduced impacts to the largest population, we estimate that this is a positive step and should ameliorate the impacts to this population from recreational use on USFS lands.

CDNR—Colorado State Parks has completed the Staunton State Park Master Plan, which includes recommendations for protecting two rare and unique plant species: *Telesonix jamesii* (James' telesonix) and Rocky Mountain monkeyflower. The greatest threat to these species in the park is from inadvertent trampling due to off-trail hiking and rock climbing and scrambling, as both species grow in areas that are attractive to visitors. Surveys for these two species were conducted in 2007. The plan contains the following recommendations to minimize human activity in habitat areas that are known to support these species: protect known Rocky Mountain monkeyflower locations as well as high-priority introduction sites; carefully plan trails and climbing access in known or potential habitat areas to minimize the potential for trampling or other impacts; survey climbing areas before they are open to the public; and provide interpretive opportunities at the Visitor's Center, including experimental introduction efforts. These recommendations are nonregulatory and, as such, are intended to promote the conservation of sensitive resources through voluntary measures and proactive partnerships (Colorado State Parks 2010, Appendix A. pp. 4–5). Therefore, we are not considering the adequacy of the plan as a regulatory mechanism.

Projects conducted within the species' range may be subject to the National Environmental Policy Act of 1970 (NEPA; 42 U.S.C. 4321 *et seq.*). All Federal agencies are required to adhere to NEPA for projects they fund, authorize, or carry out. The Council on Environmental Quality's regulations for implementing NEPA (40 CFR parts 1500–1518) state that agencies shall include a discussion on the environmental impacts of the various project alternatives, any adverse environmental effects which cannot be avoided, and any irreversible or irretrievable commitments of resources involved (40 CFR part 1502). NEPA is a disclosure law that does not require subsequent minimization or mitigation measures by the Federal agency involved.

Summary of Factor D

Based on the information provided in the petition, as well as other information available in our files, we find that there is no substantial scientific or commercial information to indicate that the inadequacy of existing regulatory mechanisms may be a threat to Rocky Mountain monkeyflower. RMNP has nearly 7 percent of the entire known population of the species on 45 percent of the occupied habitat, and impacts to plants and habitat have been observed, but aside from the 2005 survey reports, we have no available information in our files or from the petitioners to indicate whether RMNP is implementing their directives to protect the species. The USFS has about 93 percent of the plants on 54 percent of the occupied habitat. About 81 percent of these plants are on the site that has been heavily trampled by hikers and exposed to drying after a large wildfire. Use of a newly built trail is expected to avoid further hiking impacts, although monitoring results are not yet available.

Given the level of information we have at this 90-day finding stage, it is unclear whether these Federal laws and regulations are adequate as they pertain to addressing the threats to the habitat of Rocky Mountain monkeyflower. We lack information regarding the implementation of existing regulatory mechanisms, and there is uncertainty about the efficacy of new protective measures and plans. We will contact RMNP and other agencies during the status review process to gather information to determine how and to what extent the existing regulations provide protection.

E. Other Natural or Manmade Factors Affecting Its Continued Existence

Biological Vulnerability and Small Population Size

Information Provided in the Petition

The petitioners assert that Rocky Mountain monkeyflower is especially vulnerable to extinction due to its

unique asexual reproductive strategy, which does not produce seeds or a seed bank to maintain populations during dry years. Plants produce a small propagation tool (the gemma) inside the stalk of each leaf, which separates at the end of each season and seems to die, but then regerminates from the ground in the spring. Because of the limited reproductive ability of Rocky Mountain monkeyflower, the petitioners assert that loss of any individuals could undermine the survival of the species.

Evaluation of Information Provided in the Petition and Available in Service Files

The Service does not consider rarity in and of itself to be a threat. Some species, such as Rocky Mountain monkeyflower, have existed in low numbers throughout their history. However, we recognize that limited reproduction, small population size, and restricted range can increase the species' vulnerability to extinction in the presence of threats or other stressors. Another vulnerability is the stature of the plants. Being small, fragile annuals that seldom produce flowers to advertise their presence, Rocky Mountain monkeyflower plants are easily overlooked and crushed underfoot and are, therefore, vulnerable to trampling, which is the primary threat to the species. The crushed plants cannot produce gemmae for reproduction, which reduces the size of the population the following year. Due to their fragile and inconspicuous nature, uniquely limited reproduction, small population size, and limited range, all populations of Rocky Mountain monkeyflower may be vulnerable to local extirpation from seemingly insignificant disturbances.

Cumulative Threats

Information Provided in the Petition

The petitioners assert that any of the above-mentioned threats working in tandem could lead to the extinction of Rocky Mountain monkeyflower. For example, they assert that habitat loss and degradation due to impacts from human recreation is exacerbated by the threats of increased temperatures and more extreme weather caused by climate change, which may impact the plant's reproductive success. They state that Rocky Mountain monkeyflower is already at risk due to its small population size and, thus, could easily be at risk from cumulative impacts of other threats.

Evaluation of Information Provided in the Petition and Available in Service Files

Information cited in the petition and available in our files is consistent with the petitioners' assertions that the vulnerability of small populations with limited range may be increased when threats are present. Warming, drying weather trends due to changing climate in the Rocky Mountains decreases the water available to support the moist habitat conditions essential for the Rocky Mountain monkeyflower's survival. The same warmer, drier weather increases the frequency of wildfire, which, in one such wildfire incident, has increased the exposure of the largest plant population to more drying. Drier conditions reduce the numbers and growth of these annual plants. Trampling by hikers further reduces the numbers of individuals available for continued reproduction.

Summary for Factor E

We find that the information provided in the petition, as well as other information available in our files, presents substantial scientific or commercial information indicating that other natural or manmade factors affecting the continued existence of Rocky Mountain monkeyflower may be a threat. Its unique asexual reproduction, annual life history, small population size, specialized habitat needs, reliance on surface water and moist soils, and discontinuous distribution all make the species vulnerable to increasingly drier habitat conditions, wildfires, and trampling by hikers.

Finding

On the basis of our determination under section 4(b)(3)(A) of the Act, we find that the petition presents substantial scientific or commercial information indicating that listing Rocky Mountain monkeyflower throughout its entire range may be warranted. Given the rarity of this species, its specific life-history traits that increase vulnerability to extinction in the presence of other stressors, and potential impacts to the existing populations from trampling, the petition and our files contain substantial information that Rocky Mountain monkeyflower may be threatened by at least two of the five listing factors: present and threatened destruction, modification, and curtailment of its habitat and range, and other natural or manmade factors affecting its continued existence.

This finding is based on information provided under Factors A and E. We determine that the information provided under Factors B and C is not substantial. The information on Factor D is unclear; we will further analyze this issue in our status review.

Because we have found that the petition presents substantial information indicating that listing Rocky Mountain monkeyflower may be warranted, we will initiate a status review to determine whether listing Rocky Mountain monkeyflower under the Act is warranted.

The ''substantial information'' standard for a 90-day finding differs from the Act's ''best scientific and commercial data'' standard that applies to a status review to determine whether a petitioned action is warranted. A 90-day finding does not constitute a status review under the Act. In a 12-month finding, we will determine whether a petitioned action is warranted after we have completed a thorough status review of the species, which is conducted following a substantial 90-day finding. Because the Act's standards for 90-day and 12-month findings are different, as described above, a substantial 90-day finding does not mean that the 12-month finding will result in a warranted finding.

References Cited

A complete list of references cited is available on the Internet at *http://www.regulations.gov* and upon request from the Western Colorado Ecological Services Field Office (see **FOR FURTHER INFORMATION CONTACT**).

Authors

The primary authors of this notice are the staff members of the Western Colorado Ecological Services Field Office.

Authority

The authority for this action is the Endangered Species Act of 1973, as amended (16 U.S.C. 1531 *et seq.*).

Dated: August 17, 2012.

Benjamin N. Tuggle,

Acting Director, U.S. Fish and Wildlife Service.

[FR Doc. 2012–21244 Filed 8–28–12; 8:45 am]

BILLING CODE 4310–55–P

DEPARTMENT OF THE INTERIOR

Fish and Wildlife Service

50 CFR Part 17

[Docket No. FWS–R7–ES–2012–0062; 4500030113]

Endangered and Threatened Wildlife and Plants; 90-Day Finding on a Petition To List the Prince of Wales Flying Squirrel as Threatened or Endangered

AGENCY: Fish and Wildlife Service, Interior.

ACTION: Notice of 90-day petition finding.

SUMMARY: We, the U.S. Fish and Wildlife Service (Service), announce a 90-day finding on a petition to list the Prince of Wales flying squirrel (*Glaucomys sabrinus griseifrons*) as an endangered or threatened species under the Endangered Species Act of 1973, as amended (Act), and to designate critical habitat. Based on our review, we find that the petition does not present substantial information indicating that listing this subspecies may be warranted. Therefore, we are not initiating a status review in response to this petition. However, we ask the public to submit to us any new information that becomes available concerning the status of, or threats to, the Prince of Wales flying squirrel or its habitat at any time.

DATES: The finding announced in this document was made on August 29, 2012.

ADDRESSES: This finding is available on the Internet at *http://www.regulations.gov* at Docket Number FWS–R7–ES–2012–0062. Supporting documentation we used in preparing this finding is available for public inspection, by appointment, during normal business hours at the U.S. Fish and Wildlife Service, Juneau Fish and Wildlife Field Office, 3000 Vintage Blvd., Suite 201, Juneau, Alaska 99801. Please submit any new information, materials, comments, or questions concerning this finding to the above address.

FOR FURTHER INFORMATION CONTACT: Bill Hanson, Field Office Supervisor, of the Juneau Fish and Wildlife Field Office (see **ADDRESSES**), by telephone 907–780–1160, or by facsimile to 907–586–7099. If you use a telecommunications device for the deaf (TDD), please call the Federal Information Relay Service (FIRS) at 800–877–8339.

SUPPLEMENTARY INFORMATION:

Background

Section 4(b)(3)(A) of the Act (16 U.S.C. 1531 *et seq.*) requires that we make a finding on whether a petition to list, delist, or reclassify a species presents substantial scientific or commercial information indicating that the petitioned action may be warranted. We are to base this finding on information provided in the petition, supporting information submitted with the petition, and information otherwise available in our files. To the maximum extent practicable, we are to make this finding within 90 days of our receipt of the petition, and publish our notice of the finding promptly in the **Federal Register**.

Our standard for substantial scientific or commercial information within the Code of Federal Regulations (CFR) with regard to a 90-day petition finding is ''that amount of information that would lead a reasonable person to believe that the measure proposed in the petition may be warranted'' (50 CFR 424.14(b)). If we find that substantial scientific or commercial information was presented or is available in our files, we are required to promptly conduct a species status review, which we subsequently summarize in our 12-month finding.

Petition History

On October 6, 2011, we received a petition, dated September 30, 2011, from Mark N. Salvo, WildEarth Guardians, requesting that the Prince of Wales flying squirrel be listed as an endangered or threatened species and that critical habitat be designated under the Act. The petition clearly identified itself as such and included the requisite identification information for the petitioner(s), as required by 50 CFR 424.14(a). In a December 20, 2011, letter to petitioner(s), we responded that we reviewed the information presented in the petition and determined that issuing an emergency regulation temporarily listing the species under section 4(b)(7) of the Act was not warranted. We also stated that when budget and workload enabled us to direct resources to the petition, we would make an initial finding on whether the petition presented substantial information indicating that the petitioned action may be warranted. We received funding in January 2012. This finding addresses the petition.

Previous Federal Action(s)

There are no previous Federal actions concerning the status of the Prince of Wales Flying squirrel under the Act.

Species Information

The Prince of Wales (POW) flying squirrel (*Glaucomys sabrinus griseifrons*) is a small (4.6 ounces [130 grams]), nocturnal, nonhibernating, arboreal rodent that is endemic to the southern part of the Alexander Archipelago in Southeast Alaska. It occurs on at least 11 islands, including POW (1,428,768 acres [ac] (578,202 hectares [ha])), Kosciusko (119,251 ac [48,259 ha]), Heceta (46,742 ac [18,916 ha]), Suemez (37,560 ac [15,200 ha]), Tuxekan (21,061 ac [8,523 ha]), Dall (162,766 ac [65,869 ha]), Orr (5,842 ac [2,364 ha]), El Capitan (1,562 ac [632 ha]) islands and three of the Barrier Islands (less than 1,236 ac [500 ha] total) (Demboski *et al.* 1998, p. 1774; Bidlack and Cook 2001, p. 284; Bidlack and Cook 2002, p. 248; MacDonald and Cook 2007, pp. 21–22, p. 172). All of these islands are part of a larger group of islands often referred to as the POW Complex (2,305,058 ac [932,824 ha]), but it is unknown whether the POW flying squirrel occurs on many of the smaller islands within the POW Complex. The only other subspecies (*G. s. zaphaeus*) of the northern flying squirrel that occurs in southeastern Alaska is restricted to the mainland and four adjacent islands (Mitkof, Wrangell, Etolin, and Revillagigedo islands) (Bidlack and Cook 2001, p. 286).

The distinctness of the POW flying squirrel as a subspecies is well documented. Howell (1934, p. 64) proposed the original subspecific designation based on the darker pelage coloration and whiter underparts of only two specimens from POW Island compared to those of the mainland subspecies (*G. s. zaphaeus*). In recent years, mitochondrial DNA and microsatellite data have confirmed that the POW flying squirrel is genetically distinct (Demboski *et al.* 1998, p. 1773; Bidlack and Cook 2001, pp. 286–288; Bidlack and Cook 2002, pp. 254–255). Base pair changes seen in mitochondrial sequences (Demboski *et al.* 1998, p. 1774; Bidlack and Cook 2001, p. 285), unique microsatellite alleles, and distinctive microsatellite frequencies (Bidlack and Cook 2002, pp. 250–252) in the POW Complex all indicate differentiation from the mainland squirrel populations. Therefore, we accept the characterization of the Prince of Wales flying squirrel as a subspecies of the northern flying squirrel.

There is little information about the historical range of the POW flying squirrel, but genetic studies indicate that flying squirrels probably colonized the archipelago after the last glacial maximum during the Holocene (Bidlack

and Cook 2001, p. 286; Bidlack and Cook 2002, pp. 253–254). These same genetic data suggest that POW flying squirrels have been isolated for enough time to observe a reduction in genetic variation (due to drift in smaller populations) and to accumulate and fix new mutations in the island populations (Bidlack and Cook 2002, p. 255). There is no evidence to support or refute the possibility that the historical range of the POW flying squirrel has changed since colonization and subspeciation occurred.

There is no information regarding population size or trend of the POW flying squirrel within any parts of its range. During the most recent status review of this insular subspecies, the International Union for the Conservation of Nature (Hafner *et al.* 1998, pp. 37–39) considered it to be ''threatened'' and NatureServe (2012 [online]) categorized it as ''imperiled,'' but both of these designations were predicated on the critical assumption that the POW flying squirrel requires old-growth forest to survive and reproduce successfully. While several studies investigating habitat relationships of the northern flying squirrel in the Pacific Northwest have concluded that optimal conditions for this species occur in old-growth forests (Carey 1995, p. 654; Carey *et al.* 1999, p. 41; and others, but see Rosenberg and Anthony 1992, p. 163), this does not appear to be the case for the POW flying squirrel in the coastal, temperate rainforests of Southeast Alaska (Smith *et al.* 2005, pp. 695–696).

Densities of the POW flying squirrel are among the highest flying squirrel densities recorded in North America (Smith 2007, p. 863). This subspecies occupies a variety of forested habitats with densities often increasing with forest complexity. Spring densities (number/ac) average 0.7 squirrels/ac (1.8 squirrels/ha) in upland old-growth forests of Sitka spruce (*Picea sitchensis*) and western hemlock (*Tsuga heterophylla*) and 0.5 squirrels/ac (1.2 squirrels/ha) in peatland-mixed-conifer forests (Smith and Nichols 2003, p. 1049). In autumn when dispersing juveniles are present, corresponding densities are 1.3 squirrels/ac (3.2 squirrels/ha) and 0.7 squirrels/ac (1.8 squirrels/ha), respectively (Smith and Nichols 2003, p. 1049). Overall, squirrel densities between the two habitat types do not differ significantly, but there is a significant habitat-by-season interaction with mean squirrel density in autumn higher in spruce-hemlock forests compared to peatland-mixed-conifer forests (Smith and Nichols 2003, p. 1049). There are no density estimates of the POW flying squirrel in managed forests, such as young or second growth stands.

Specific habitat correlates of density and use of the POW flying squirrel vary by season, forest type, and scale (Smith *et al.* 2004, pp. 667–668), but squirrel density and habitat use are most likely linked to resource availability at the scale of individual home ranges (Smith *et al.* 2005, p. 695). Smith *et al.* (2004, p. 667) found that 13 of 26 vegetative and structural habitat elements were statistically significant in explaining the variation in density and habitat use of the POW flying squirrel in two seasons (spring, autumn) and two old-growth forest types (upland old-growth, peatland-mixed-conifer). However, further analysis indicated that habitat use of the POW flying squirrel was best predicted by single habitat variables, as opposed to multivariate factors (Smith *et al.* 2005, pp. 694–695).

To sum, densities of large trees (greater than 29 inches [in] (74 centimeters [cm]) diameter at breast height [dbh]) and understory cover of blueberry and huckleberry shrubs (*Vaccinium* species; hereafter *Vaccinium*) explain much of the variation in microhabitat use by POW flying squirrels; as large tree density and *Vaccinium* cover increased, capture rates of squirrels also increased (Smith *et al.* 2004, p. 667; Smith *et al.* 2005, p. 689). This result differs from patterns of habitat use reported for flying squirrel populations in the Pacific Northwest, which clearly prefer complex, multi factorial habitat conditions that are characteristic of old-growth forests (Carey *et al.* 1999, pp. 24–25, 39–40). Smith *et al.* (2005, p. 696) proposed that the diet of the POW flying squirrel and the community structure of arboreal rodents (although not mutually exclusive), especially squirrels (Family Sciuridae), may be sufficiently different than those in the Pacific Northwest to facilitate a more general lifestyle.

Despite the high number of endemic species in Southeast Alaska, the small mammal community is relatively low in numbers or variety of species compared to the coniferous forests of Washington and Oregon where at least 57 native terrestrial mammal species have been observed (Carey 1995, p. 653; Smith and Nichols 2003, p. 1054; MacDonald and Cook 2007, pp. 15–17). Only 15 native mammal species have been documented on POW Island (MacDonald and Cook 2007, p. 142), and the POW flying squirrel is the only arboreal or forest-floor squirrel (MacDonald and Cook 2007 p. 177). Across most of the range of the northern flying squirrel, the American red squirrel (*Tamiasciurus hudsonicus*) occurs, and the two species directly compete for food and habitat resources. On POW Island, however, red squirrels are not present, providing the POW flying squirrel with almost exclusive access to many resources important to its life cycle (Smith and Nichols 2003, p. 1054; MacDonald and Cook 2007, pp. 25–27). Undoubtedly, this competitive release from interspecific competition further distinguishes the flying squirrels of Southeast Alaska from those in the Pacific Northwest.

In most parts of its range, the northern flying squirrel feeds on truffles and plays an important role in dispersing their spores in coniferous forest ecosystems (Weigl 2007, p. 900). In contrast, the POW flying squirrel relies less on truffles and feeds on a greater diversity of food items than other subspecies of northern flying squirrel (Maser *et al.* 1986, p. 2087; Carey *et al.* 1999, p. 46; Pyare *et al.* 2002, p. 100; Flaherty *et al.* 2010, p. 85). Stable isotope and fecal analyses show that the main dietary items of POW flying squirrels were conifer seeds, lichens, and fungi, all of which are more abundant in old-growth than in young-growth forests (Flaherty *et al.* 2010, p. 85). Truffles appear to be a moderately important component of the POW flying squirrel diet with spores identified in about 50 percent of fecal samples (Pyare *et al.* 2002, p. 100). However, *Elaphomyces,* the most common fungus on POW Island, has minimal nutritional value for squirrels (Flaherty *et al.* 2010, pp. 86–87). Overall, the POW flying squirrel has a far less specialized diet than the northern flying squirrels of the Pacific Northwest. This likely allows them to utilize a greater diversity of forested habitats, especially when coupled with the absence of competition with the red squirrel.

The northern flying squirrel uses dens for shelter and to carry out important ecological and life history functions such as avoiding predators, caching food, thermoregulating, and reproducing. Flying squirrels use multiple dens within their home range, or core den area, and, therefore, the availability of suitable den sites on the landscape is strongly linked to the persistence of local squirrel populations. Pyare *et al.* (2010, p. 891) found that POW flying squirrels den in cavities in live trees (42 percent) or snags (51 percent), rarely constructing their own nests (2 percent) or using the ground (3 percent). Positive correlates of den trees used by POW flying squirrels include diameter at breast height (dbh) for both live trees (mean dbh = 40 in [101 cm]) and snags (mean dbh = 29 in

[73 cm]), number of conks (hard, shelf-like structure of wood-decaying fungi found on stumps, logs, or trees) and bole entries (openings in the trunk or main stem of a tree) in live trees, and decay class for snags (Pyare *et al.* 2010, p. 892).

In their study, the authors found that squirrels used 3.5–7.1 dens/month and moved 195–711 yards (yd [178–650 meters (m)]) between dens (Pyare *et al.* 2010, p. 891). Compared to northern flying squirrels in other parts of their range, adult POW flying squirrels occupy smaller core denning areas, yet use more den trees per month (Pyare *et al.* 2010, p. 891). This finding coupled with the nearly exclusive use of cavities for denning (93 percent) suggests that suitable cavities were readily available to squirrels despite the intensely managed landscape in which the study was conducted (Pyare *et al.* 2010, p. 893). At a broader scale, POW flying squirrels den in larger forested habitat patches, but with greater amounts of edge, than what was available on the landscape (Pyare *et al.* 2010, p. 893). Results of this study suggest that despite the need for larger trees for denning, the POW flying squirrel is not limited by availability or suitability of cavities or den sites, even in the small and insular habitat fragments in their study area, and is capable of moving large distances between den sites.

Although the POW flying squirrel occupies a variety of forested habitats to meet its life-history needs, the persistence of squirrels, especially in a managed landscape, relies heavily on their ability to disperse to suitable habitats. Flying squirrels can glide from one tree to another or can walk or run on the ground, but Flaherty *et al.* 2010, p. 1051) speculated that ground travel was more energetically costly than gliding. High forest canopies and relatively open under- and mid-story layers provide squirrels with high launch points and unobstructed gliding space, both of which allow for longer glides and less energy expenditure (Flaherty *et al.* 2008, p. 1051). Vernes (2001 [in Flaherty *et al.* 2008, p. 1057]) determined that squirrels will glide across a distance that is twice as long as the height of their launch; mean tree height of Sitka spruce and western hemlock in Southeast Alaska is 41.2 yd (37.7 m).

Flaherty *et al.* (2008, pp. 1055–1057) estimated the perceptual range, the distance at which an animal can perceive a particular habitat or landscape feature (Lima and Zollner 1996 [in Flaherty *et al.* 2008, p. 1051]), of a POW flying squirrel to be 109–164 yd (100–150 m) in clearcuts and 27–55 yd (25–50 m) in second-growth forests, both far smaller than the average width of managed stands on POW Island (about 394 yd [360 m]). The authors reported, however, that the ability of individual squirrels to select and orient themselves to the shortest distance towards a suitable habitat patch is most influenced by factors affecting sense of smell capabilities (e.g., precipitation, wind speed), not visual or auditory cues (Flaherty *et al.* 2008, p. 1055).

While there is presumably a fragmentation threshold in which flying squirrel dispersal would cease (or be drastically reduced), there is no information available that quantifies this threshold, and there is no evidence that this threshold has been reached on the highly managed forested landscapes within the POW Complex. Bidlack and Cook (2002, p. 256) found that there is contemporary gene flow among squirrel populations in the POW Complex, although that flow is primarily affected by distance between populations, and Pyare *et al.* (2010, p. 891) estimated very large core den areas and movements of juvenile POW flying squirrels across a highly fragmented landscape, suggesting that dispersal is occurring and is not a limiting factor to population persistence.

The northern flying squirrel has several life-history traits characteristic of a K-selected species (Smith 2007, p. 862), which produce few offspring and live in stable environments. It is relatively long-lived (greater than 7 years), produces small litters (usually 2–3 young) after a long gestation period (37–42 days), and exhibits density-dependent population growth (Fryxell *et al.* 1998 [in Smith 2007, p. 862; Lehmkuhl *et al.* 2006, p. 589). Consequently, annual survival rates are expected to be high. Accordingly, Smith and Nichols (2003, pp. 1050–1052) estimated minimum survival on POW Island to be 16.7–65.7 percent in summer and 43.9–60.4 percent in winter with mean recapture probability of 0.33 (range = 0.30–0.39; p. 1049). In the same study, there was weak evidence suggesting that productivity was higher in upland-old-growth forest than in peatland-mixed-conifer forest. The number of reproductive females captured was greater in upland-old-growth (3.9/trapping grid versus 2.1/trapping grid in peatland-mixed-conifer), but there was no difference between the percentage of reproductive females captured in either habitat (75.5 percent in upland-old-growth, 75.9 percent in peatland-mixed-conifer (Smith and Nichols 2003, p. 1050)).

Evaluation of Information for This Finding

Section 4 of the Act (16 U.S.C. 1533) and its implementing regulations at 50 CFR 424 set forth the procedures for adding a species to, or removing a species from, the Federal Lists of Endangered and Threatened Wildlife and Plants. A species may be determined to be an endangered or threatened species due to one or more of the five factors described in section 4(a)(1) of the Act:

(A) The present or threatened destruction, modification, or curtailment of its habitat or range;

(B) Overutilization for commercial, recreational, scientific, or educational purposes;

(C) Disease or predation;

(D) The inadequacy of existing regulatory mechanisms; or

(E) Other natural or manmade factors affecting its continued existence.

In considering what factors might constitute threats, we must look beyond the mere exposure of the species to the factor to determine whether the species responds to the factor in a way that causes actual impacts to the species. If there is exposure to a factor, but no response, or only a positive response, that factor is not a threat. If there is exposure and the species responds negatively, the factor may be a threat and we then attempt to determine how significant a threat it is. If the threat is significant enough that it may drive or contribute to the risk of extinction of the species such that the species may warrant listing as a threatened or endangered species as those terms are defined by the Act, this does not necessarily require empirical proof of a threat. The combination of exposure and some corroborating evidence of how the species is likely impacted could suffice. The mere identification of factors that could impact a species negatively may not be sufficient to compel a finding that listing may be warranted. The information must include evidence sufficient to suggest that these factors may be operative threats that act on the species to the point that the species may meet the definition of a threatened or endangered species under the Act.

In making this 90-day finding, we evaluated whether or not information regarding the threats to the POW flying squirrel, as presented in the petition and other information available in our files, is substantial, thereby indicating that the petitioned action may be warranted. Our evaluation of this information is presented below.

A. The Present or Threatened Destruction, Modification, or Curtailment of Its Habitat or Range

Information Provided in the Petition

According to the petitioner, the POW flying squirrel is an island endemic species that occupies forest habitats and, therefore, is vulnerable to negative impacts of logging and associated habitat fragmentation. There is a long history of logging in Southeast Alaska, especially on POW Island where roughly 39 percent of the old-growth forest has been harvested. This has resulted in a complex matrix of forest stands of varying age, muskeg (bog, marsh, or peatland; an area of mosses, sedges, and open growth of scrubby trees), less productive forests, and the presence of roads (WildEarth Guardians 2011, p. 2). The petitioner raises concern that the composition and spatial configuration of remaining forests within the range of the POW flying squirrel is not sufficient for the squirrel to meet its life-history needs and, therefore, to persist into the future.

There are two pinchpoints, or narrow land corridors connecting larger areas of old-growth forest, on POW Island that are currently not protected and, therefore, are susceptible to future development. The Neck Lake and Sulzer Portage areas are nearly surrounded by private lands that have previously been subject to intense logging. These areas are connected to fragments of old-growth habitat intermixed with water, rugged terrain, and logged stands. All of these features are implicated by the petitioner in preventing movement of squirrels across the pinchpoints. The petitioner suggests that if these two pinchpoints are developed and the forest is removed, flying squirrel populations on either side of the pinchpoints may become isolated from one another. Although there is an existing series of old-growth reserves in Tongass National Forest lands on POW Island, flying squirrels may have a difficult time moving among these reserves especially if additional logging occurs as is planned within the next 100 years.

Evaluation of Information Provided in the Petition and Available in Service Files

The petitioner raises three primary concerns related to the destruction, modification, or curtailment of habitat or range of the POW flying squirrel, none of which were supported by the information in our files or the petition itself. First, the petitioner suggests that current and future forest composition within the POW Complex is not adequate for the persistence of the POW flying squirrel, assuming that this subspecies is an old-growth obligate. Second, the petitioner identified lack of connectivity among forest habitat patches and habitat fragmentation as factors reducing the population viability and long-term persistence of POW flying squirrels. Third, the petitioner raises concern about possible future development and additional logging within the range of the POW flying squirrel. We do not find substantial information supporting any of these assertions related to this threat.

There are many definitions for old-growth forest. Generally, we consider old-growth forests to be in a late successional stage of forest development with both vertical and horizontal structural diversity including live trees and snags of a minimum number and size, canopy conditions with multiple layers, and logs and large woody debris (often on the forest floor). These forests are complex and involve several habitat variables. Species that rely on old-growth forests typically require habitat features of similar complexity.

The POW flying squirrel occupies a diversity of forested habitats within its range. Although squirrel densities are slightly higher in productive, upland old-growth forests than in lower productive, peatland-mixed-conifer forests in Southeast Alaska (Smith and Nichols 2003, p. 1049), two habitat features alone—density of large trees and understory cover of *Vaccinium*—explain much of the variation in habitat use of the POW flying squirrel (Smith *et al.* 2004, pp. 693–694). Smith *et al.* (2005) modeled habitat use of the POW flying squirrel and determined that complex models containing multiple variables performed poorly compared to simple models of individual habitat variables (i.e., looking at one habitat characteristic at a time). The lack of complexity of habitat conditions used by the POW flying squirrel suggests that this species is not an old-growth obligate species even though squirrel densities are often higher in old-growth forests. Therefore, unlike flying squirrels in other coniferous forests, especially in the Pacific Northwest (Carey *et al.* 1999, pp. 24–25, 39–40), the information suggests that the POW flying squirrel is not an old-growth obligate species but uses a wider range of habitat types successfully. Furthermore, densities of the POW flying squirrel in a variety of forested habitats are among the highest flying squirrel densities recorded in North America (Smith 2007, p. 863). Based on the information in our files, any population projections of the POW flying squirrel based on the assumption that they depend on old growth and any loss of old growth equates to a loss in POW flying squirrels are not valid.

We acknowledge that population density is not necessarily a reliable indicator of habitat quality. Smith and Nichols (2003, p. 1052) captured more reproductive females in upland-old-growth forest (3.9/trapping grid) compared to peatland-mixed-conifer forest (2.1/trapping grid in peatland-mixed-conifer). Based on this finding, Smith and Person (2007, p. 632) speculated that flying squirrels occupying peatland-mixed-conifer forests in some years represent population sinks that are sustained by immigration. However, Smith and Nichols (2003, p. 1052) reported no difference between the percentage of reproductive females captured in either habitat (75.5 percent in upland-old-growth, 75.9 percent in peatland-mixed-conifer), and, therefore, it is difficult to interpret the results of the study as they relate to identifying population sources, sinks, and habitat selection of the POW flying squirrel.

There is insufficient and mixed evidence that fragmentation and lack of connectivity influences habitat use of POW flying squirrels. In a heavily managed landscape, POW flying squirrels chose to den in areas with larger habitat patches, but also greater absolute amounts of edge than what was available across the landscape (Pyare *et al.* 2010, p. 894). Similarly, POW flying squirrels were more likely to be captured in traps on the forest edge compared to forest interior (Smith *et al.* 2004, p. 666). Pyare *et al.* (2010) noted that radio-collared squirrels moved large distances to find suitable den sites (p. 891), traveling through linear old-growth fragments with a high edge-to-area ratio at rates nearly equivalent to those in more interior old-growth forest (p. 894). These findings indicate that squirrel habitat use is not negatively correlated with forest edge or current levels of fragmentation on the POW Complex. Furthermore, despite the intensive and extensive logging within this area over the last 50 years, there is contemporary gene flow among populations of POW flying squirrels (Bidlack and Cook 2002, pp. 250–252), suggesting that there are currently few connectivity barriers within the range of this subspecies.

The Tongass Land and Resource Management Plan (2008, p. 2–4; hereafter, Tongass Land Management Plan; TLMP), which outlines management of 80 percent of the lands in Southeast Alaska, includes a conservation strategy aimed to maintain

a forest-wide system of old-growth and other forest habitats to sustain old-growth associated species and resources. The strategy includes a series of small (less than 1,606 ac [650 ha]), medium (about 10,008 ac [4050 ha]), and large reserves (at least 40,031 ac [16,200 ha]), nondeveloped areas (e.g., Wilderness and Research Natural areas), and beach, estuary, and riparian corridors (TLMP Final Environmental Impact Statement 2008, p. D–6). Within the POW Complex, there are 95 reserves consisting of 65 small, 24 medium, and 4 large reserves totaling 325,081 ac (131,556 ha) and 4 designated Wilderness Areas protecting 229,630 ac (92,928 ha) on Federal land. Across all Federal and non-Federal lands within the POW Complex, approximately half (44%) of the land is either legally (325,398 ac [131,684 ha] or administratively (691,102 ac [279,679 ha] protected and the remainder is or may be developed (1,288,563 ac [521,463 ha]).

Although the efficacy of many aspects of the conservation strategy remains untested, the POW flying squirrel was a design species in developing the criteria for habitat conservation areas, specifically the small reserves (Julin 1997, p. 19). Smith and Person (2007, p. 627) assessed the size and composition of these small reserves by modeling population viability of the POW flying squirrel in two habitat types (upland-old-growth, peatland-mixed-conifer). The primary purpose of this modeling exercise was to evaluate the potential of only individual small habitat reserves for flying squirrel population viability. The authors did not include medium and large reserves or corridors in their analysis. Furthermore, they assumed no immigration or emigration among small reserves. However, based on POW flying squirrel movements (Pyare *et al.* 2010, p. 891) and contemporary gene flow (Bidlack and Cook 2002, p. 256), this was not a valid assumption. Despite these limitations, modeled estimates of time to extinction of POW flying squirrel were high, ranging from 118 to 507 years (or approximately 12 to 50 generations) depending on habitat type and percent of upland-old-growth within the habitat patch (Smith and Person 2007, pp. 630–631) and intrinsic rates of population growth indicated stable or increasing populations (greater than zero) regardless of habitat type (p. 629). Therefore, in the absence of trend information or an explicit field-based test of the assumptions or reserve criteria and because the model assumptions were very conservative (i.e., only small reserves available, no dispersal), the information available suggests that the conservation strategy, if implemented properly, will provide sufficient suitable habitat for population viability, and for connectivity between and among forest reserves and habitat fragments in the POW Complex. Petitioners did not provide any information to change this analysis or refute the conservation strategy.

Although the conservation strategy does not extend to non-Tongass lands, the majority of land in the POW Complex (~97 percent) is part of the Tongass National Forest and, therefore, is subject to the standards and guidelines described in the plan. The petition raises concern that the non-Federal lands on POW Island are not protected currently and, therefore, are available for development; other than the assertion by the petitioners, there is no information that suggests that this lack of protection or the non-Federal land ownership suffice as substantial information suggesting a threat to the POW flying squirrel, especially given the other land protections and management prescriptions on Federal lands within the range of this subspecies and the overall amount of existing forested land within the range of this subspecies (722,010 ha; Table 2 in petition, p. 20).

The petitioner states that a flawed assumption of the Tongass Land Management Plan is that second-growth forests will provide lesser but sufficient quality habitat for the POW flying squirrel (petition, p. 19). This statement was uncited, and we were unable to find reference to it within the management plan itself. Regardless, we did not find any information evaluating the use of second-growth forested stands specifically by POW flying squirrels, but Flaherty *et al.* (2010, p. 87) reported that low availability of some food items in second-growth forests may constrain dispersal of squirrels across these habitats. We agree that movement of POW flying squirrels between and among forest patches on the landscape is critical to their persistence, but squirrels appear to be dispersing successfully based on radio-marked individuals (Pyare *et al.* 2010, p. 891) and contemporary gene flow among populations in the POW Complex (Bidlack and Cook 2002, pp. 250–252). Furthermore, density and demography of northern flying squirrels in young and old-growth forests of the Pacific Northwest were similar (Rosenberg and Anthony 1992, p. 163; Carey 1995, p. 654; Lehmkuhl *et al.* 2006, p. 594).

In summary, we found that the information provided in the petition, as well as other information in our files, does not suggest that the destruction, modification, or curtailment of habitat or range of the POW flying squirrel may be a threat to the subspecies because it is a habitat opportunist, using a variety of forested habitats, does not avoid forest edges, is apparently dispersing successfully across the current landscape, and is presumably benefiting from the forest reserve system, which provides considerable amounts of forested habitat throughout its range. We conclude that the information provided in the petition describing this potential threat was inconsistent with the published literature and available reports in our files.

B. Overutilization for Commercial, Recreational, Scientific, or Educational Purposes.

Information Provided in the Petition

The petitioner raises concern about impacts of hunting on POW flying squirrel populations, especially given some of the K-selected life-history traits of this subspecies and the presumed small population size.

Evaluation of Information Provided in the Petition and Available in Service Files

The State of Alaska does not regulate or require reporting of take of POW flying squirrels. Additionally, we are not aware of targeted hunting effort of squirrels within the POW Complex, as suggested in the petition. Although POW flying squirrels may be taken occasionally by recreational or subsistence hunters, we do not have any information to suggest that hunting pressure on squirrels could be having a population-level impact within the POW Complex. Given their small size and nocturnal habits, it is unlikely that flying squirrels are sought by hunters for meat or fur, and we are not aware of any cultural significance of the flying squirrel to First Nations in Southeast Alaska.

In summary, we found that the information provided in the petition, as well as other information in our files, does not present substantial scientific or commercial information indicating that overutilization for commercial, recreational, scientific, or educational purposes is a threat to the POW flying squirrel. Further, we are not aware of any other potential threats to the POW flying squirrel as a result of recreational or subsistence hunters within the POW Complex.

C. Disease or Predation.

Information Provided in the Petition

The petitioner presents information to suggest that habitat destruction and fragmentation may result in increased predation on the POW flying squirrel. Reduction of canopy cover reduces protection of the POW flying squirrel when gliding for movement and may force individuals to resort to travel on the ground, increasing their exposure to predators. The petitioner identifies several potential nonnative predators including the raccoon (*Procyon lotor*), American marten (*Martes americana*), and feral cats and dogs.

Evaluation of Information Provided in the Petition and Available in Service Files

POW flying squirrels do not avoid natural or anthropogenic forest edges; in fact, Pyare *et al.* (2010, p. 894) found that they choose to den in habitat patches with greater absolute amounts of edge than what was available on the landscape and Smith *et al.* (2004, p. 666) reported greater capture rates of squirrels on the forest edge than in interior forest. Therefore, we did not find evidence that squirrels are avoiding forest edges, suggesting that neither predation risk is driving squirrel behavior nor is predation increased due to greater amounts of forest edge that may result from habitat fragmentation.

Raccoons and marten have been introduced to some islands within the POW Complex, but neither appears to be having population-level impacts on the POW flying squirrel. In 1941, eight raccoons were introduced to a small island in El Capitan Passage on the west coast of POW Island. The transplant was apparently successful with occasional sightings of raccoons on POW Island as recently as 2001 (Paul 2009, p. 110). However, this population of raccoons is small and localized, and it is unlikely to be having a population-level impact on POW flying squirrels on the POW Complex. In 1934, ten marten were introduced to POW Island for fur trapping opportunities. This species is now well-established in the area; from 2001 to 2006, trappers reported 323–1,026 marten taken annually on POW Island (Paul 2009, pp. 104–105). However, Flynn *et al.* (2004, p. 23) estimated that POW flying squirrel was a small proportion (5–9 percent varying by year) of the diet of marten on POW Island, where they feed more commonly on salmon, voles, mice, and berries. The petitioner did not provide, and we have no evidence in our files, indicating that predation from feral cats or dogs is occurring. The barred owl (*Strix varia*) is a new inhabitant of Southeast Alaska, including the POW Complex (Kissling and Lewis 2009, p. 80). This species likely preys on the POW flying squirrel, but we do not have any quantitative or qualitative information regarding the diet of the barred owl in this area and, therefore, cannot evaluate any potential impacts on POW flying squirrel populations. However, we are not aware of any evidence suggesting that barred owls are having a population level impact.

We did not find any information describing existing or potential disease impacts to POW flying squirrels. In areas where the southern flying squirrel (*G. volans*) and the northern flying squirrel coexist (e.g., the southern Appalachians), the southern species can infect the northern species with a nematode (*Strongyloides robustus*) that can cause huge die-offs of northern flying squirrels (Weigl 2007, pp. 901–902). However, we are unaware of any such occurrence in POW flying squirrel populations in Southeast Alaska.

In summary, we find that the information provided in the petition, as well as other information in our files, does not present substantial scientific or commercial information indicating that disease or predation may be a threat to the POW flying squirrel. The POW flying squirrel does not avoid forest edges where predation risk is assumed to be greatest and is not impacted at the population level by introduced predators within the POW Complex. We conclude that the information presented in the petition does not establish a connection between habitat fragmentation and predation risk to the POW flying squirrel. The potential predators identified in the petition are not widespread or established and do not feed on squirrels regularly. Furthermore, POW flying squirrels do not avoid edges and may in fact select for them, suggesting that individual squirrels do not perceive increased predation risk at or near forest edges, as stated in the petition. We did not find any information describing existing or potential disease impacts to POW flying squirrels.

D. The Inadequacy of Existing Regulatory Mechanisms.

Information Provided in the Petition

The petitioner identifies perceived inadequacies of the most recent Tongass Land Management Plan (2008) to protect old-growth forest habitats and reserve connectivity required to support metapopulations of POW flying squirrels across their range. The primary concern described in the petition relates to the efficacy of small old-growth reserves and the ability of POW flying squirrels to glide across large clearcuts. Flaherty *et al.* (2008, p. 1055) concluded that the perceptual range, the distance at which an animal can perceive a particular habitat or landscape feature (Lima and Zollner 1996 [in Flaherty *et al.* 2008, p. 1051]) of the POW flying squirrel is 109–164 yd (100–150 m) in clearcuts and 27–55 yd (25–50 m) in second-growth forest. Both distances are shorter than the average width of clearcuts on POW Island (~394 yd [360 m]). The petitioner asserts that if individuals are not capable or willing to cross large openings, squirrel populations will become isolated and may be extirpated.

In addition to POW flying squirrel movement and habitat connectivity, the petitioner raises concern about forest composition, patch size, and land ownership and population viability of squirrels. Old-growth forests are not equal in ecological value; there are structural differences between old-growth forests of mixed conifer, peatland, and Sitka spruce and western hemlock. The petitioner claims that the POW flying squirrel may utilize second-growth forests, but they depend on old-growth forests for their survival. Private lands are not subject to the same forest management practices as those outlined in the Tongass Land Management Plan, and, therefore, these private lands are not protected and are subject to development.

Evaluation of Information Provided in the Petition and Available in Service Files

Similar to Factor A, the petitioner assumes that the POW flying squirrel requires productive, old-growth forest to meet their life-history needs, including survival, reproduction, and movement, and we did not find substantial information in the petition or our files to support this assumption. The Tongass Land Management Plan is designed to provide adequate amounts of forest habitat and connectivity of suitable structure and composition to maintain viable populations of the POW flying squirrel. Smith and Person (2007, pp. 631–633) concluded that small old-growth reserves are too small to assure a high probability (greater than 90 percent) of sustaining flying squirrel populations, but their simulations relied on the unrealistic assumption of no immigration and do not consider the other matrix components, such as medium and large reserves and stream and beach corridors (see Factor A for details on the composition of reserves and land status). As noted above in

Factor A, the majority (~97 percent) of land within the POW Complex is subject to prescriptions and guidelines outlined in the Tongass Land Management Plan; a very small proportion of the land is privately owned. We do not believe that the lack of protection of these non-Federal lands presents a threat to the POW flying squirrel.

We lack population trend estimates of the POW flying squirrel and, therefore, are unable to evaluate reliably the efficacy of forest management practices or critical components of the conservation strategy for squirrel populations in the POW Complex. However, over the last 50–60 years, extensive timber harvesting has occurred within the POW Complex, reducing the total amount of old-growth forest from 989,778 ac (400,549 ha) to 722,010 ac (292,187 ha; 27 percent, as of 2006; in petition, p. 20) with most of the logging occurring prior to the implementation of the conservation strategy in 1997. The POW flying squirrel not only persisted during this period of heavy timber removal and no conservation strategy, but also appears to be utilizing and dispersing successfully across the managed landscape (Bidlack and Cook 2002, pp. 250–252; Smith *et al.* 2003, p. 1049; Pyare *et al.* 2010, pp. 889–891).

In light of this information, we find that the information provided in the petition, as well as other information in our files, does not suggest that the inadequacy of existing regulatory mechanisms may be a threat to the POW flying squirrel. The POW flying squirrel is not an old-growth obligate species, is moving and dispersing successfully across the managed landscape, and is persisting in apparently viable populations under the existing conservation strategy and management guidelines in the Tongass Land Management Plan. As in the analysis for Factor A, we conclude that the information provided in the petition describing this threat relies on unsupported assumptions and does not fully recognize all components of the conservation strategy under the Tongass Land Management Plan.

E. Other Natural or Manmade Factors Affecting Its Continued Existence

Information Provided in the Petition

The petitioner identified climate change and the introduction of the American red squirrel (*Tamiasciurus hudsonicus*) as potential threats to persistence of POW flying squirrels. Specifically, increased temperatures and fires, heavy winds, warmer sea temperatures and sea level rise were proposed as environmental changes that may result from changing climatic conditions and may affect POW flying squirrels. The red squirrel was implicated as a competitor to the POW flying squirrel for some food resources.

Evaluation of Information Provided in the Petition and Available in Service Files

Most climate models for Southeast Alaska predict warmer and wetter weather with increases in rainfall and decreases in snowfall, especially at lower elevations, over the next 50–100 years (Bonsal and Prowse 2006, pp. 33–40). Despite higher projected precipitation, forests may be drier during summer months, and, therefore, fire, which currently is very uncommon in Southeast Alaska, may occur more often (Haufler *et al.* 2010, p. 18). However, it is difficult to assess potential impacts of increased fire on POW flying squirrel populations. Fire is a common event across most of the range of the northern flying squirrel, which encompasses the boreal, coniferous, and mixed forests of the northern United States and Canada and the slopes of the mountains of the east and west, and it is quite clear that this species has experienced a number of range contractions in the past (Weigl 2007, pp. 897–898).

In Southeast Alaska, loss of snow cover at low elevations is causing changes in the distribution and decreasing the survival of yellow cedar (*Callitropsis nootkatensis;* Haufler *et al.* 2010, pp. 19–20). The resulting die-offs of yellow cedar stands temporarily increase the availability of snags for denning squirrels, but also provide fuel for potential fire events in the future. However, yellow cedar stands are not common on the POW Complex (1.3 percent; 29,425 ac [11,908 ha]), and, therefore, loss of these stands to fire, should it occur, would not result in a substantial loss of habitat for the flying squirrel. We did not find any information to connect sea level rise or warmer sea temperatures to POW flying squirrel ecology or persistence. Therefore, impacts to the POW flying squirrel from predicted changes in climate do not appear to be a population-level threat to the subspecies.

The petitioner stated that the American red squirrel, a potential competitor to the POW flying squirrel, was introduced to POW Island, but no citation was provided in support of this claim (petition, p. 21), nor have we found any information supporting this statement in the literature or our files (e.g., Paul 2009, p. 111). Furthermore, MacDonald and Cook (2007, p. 26) do not include POW Island or Complex in the current range of the red squirrel. The red squirrel was introduced to other large islands in Southeast Alaska, such as, Admiralty, Baranof, and Chichagof islands, but there is no mention of any islands within the range of the POW flying squirrel (Paul 2009, p. 111).

In summary, we find that neither the information provided in the petition nor any other information in our files presents substantial scientific or commercial information indicates that other natural or manmade factors may be a threat to the POW flying squirrel. Potential impacts from changes in climate are contradictory and difficult to evaluate reliably, and the information presented in the petition regarding changes in climate is speculative and unsubstantiated. We found no reliable information indicating that red squirrels have been introduced within the range of the POW flying squirrel, contrary to what is stated in the petition.

Finding

In summary, the petition does not present substantial information that listing may be warranted. The POW flying squirrel is a habitat opportunist that occupies a diversity of forested habitats (Smith *et al.* 2003, p. 1049), eats a variety of food items (Flaherty *et al.* 2010, p. 85), moves among remnant forest patches (Pyare *et al.* 2010, pp. 889–891), and disperses successfully across the landscape (Bidlack and Cook 2002, pp. 250–252). In the absence of population trend of the POW flying squirrel, the petitioner relies heavily on a presumption of dependency of this species on old-growth habitats and its inability to disperse across the forest openings caused by clearcuts. We find most of the information to be speculative or unsubstantiated even when augmented with the information in our files. This is especially true when considering the protections afforded the POW flying squirrel under the conservation strategy outlined in the Tongass Land Management Plan. Neither the information in the petition nor the information available in our files suggest that the Prince of Wales flying squirrel may be in danger of extinction or likely to become so now or in the foreseeable future.

Under section 4(b)(3)(A) of the Act, we conclude that the petition does not present substantial scientific or commercial information to indicate that listing the Prince of Wales flying squirrel under the Act as a threatened or endangered species may be warranted at this time. Although we will not review

the status of the species at this time, we encourage interested parties to continue to gather data that will assist with the conservation of the Prince of Wales flying squirrel. If you wish to provide information regarding the Prince of Wales flying squirrel, you may submit your information or materials to the Field Supervisor, Juneau Fish and Wildlife Field Office (see **ADDRESSES**), at any time.

References Cited

A complete list of references cited is available on the Internet at *http://www.regulations.gov* and upon request from the Juneau Fish and Wildlife Field Office (see **FOR FURTHER INFORMATION CONTACT**).

Author

The primary authors of this notice are the staff members of the Juneau Fish and Wildlife Field Office (see **ADDRESSES**).

Authority

The authority for this action is the Endangered Species Act of 1973, as amended (16 U.S.C. 1531 *et seq.*).

Dated: August 20, 2012.

Benjamin Tuggle,

Acting Director, U.S. Fish and Wildlife Service.

[FR Doc. 2012–21232 Filed 8–28–12; 8:45 am]

BILLING CODE 4310–55–P

Notices

Federal Register
Vol. 77, No. 168
Wednesday, August 29, 2012

This section of the FEDERAL REGISTER contains documents other than rules or proposed rules that are applicable to the public. Notices of hearings and investigations, committee meetings, agency decisions and rulings, delegations of authority, filing of petitions and applications and agency statements of organization and functions are examples of documents appearing in this section.

DEPARTMENT OF AGRICULTURE

Forest Service

Tri County Resource Advisory Committee

AGENCY: Forest Service, USDA.

ACTION: Notice of meeting.

SUMMARY: The Tri County Resource Advisory Committee will meet in Deer Lodge, Montana. The committee is authorized under the Secure Rural Schools and Community Self-Determination Act (Pub. L. 112–141) (the Act) and operates in compliance with the Federal Advisory Committee Act. The purpose of the committee is to improve collaborative relationships and to provide advice and recommendations to the Forest Service concerning projects and funding consistent with the title II of the Act. The meeting is open to the public. The purpose of the meeting is review and recommend projects authorized under title II of the Act.

DATES: The meeting will be held September 18, 2012, 5:00 p.m.

ADDRESSES: The meeting will be held at 1002 Hollenback Road, Deer Lodge, Montana at the USDA Service Center Building. Written comments may be submitted as described under Supplementary Information. All comments, including names and addresses when provided, are placed in the record and are available for public inspection and copying. The public may inspect comments received at the Beaverhead-Deerlodge National Forest Headquarters, 420 Barrett Street, Dillon, Montana. Please call ahead to (406) 683–3900 to facilitate entry into the building to view comments.

FOR FURTHER INFORMATION CONTACT: Patty Bates, RAC Coordinator, Beaverhead-Deerlodge Forest, (406) 683–3979 and *pbates@fs.fed.us.* Individuals who use telecommunication devices for the deaf (TDD) may call the Federal Information Relay Service (FIRS) at 1–800–877–8339 between 8:00 a.m. and 8:00 p.m., Eastern Standard Time, Monday through Friday.

SUPPLEMENTARY INFORMATION: The subjects of the meeting are project proposal review, discussion of funding priorities, presentation of proposals, public input discussion, and recommendation to the Designated Federal Official. The full agenda and project proposals may be viewed at *https://fsplaces.fs.fed.us/fsfiles/unit/wo/secure_rural_schools.nsf/.* Anyone who would like to bring related matters to the attention of the committee may file written statements with the committee staff before or after the meeting. The agenda will include time for people to make oral statements of three minutes or less. Individuals wishing to make an oral statement should request in writing by September 11, 2012 to be scheduled on the agenda. Written comments and requests for time for oral comments must be sent to Beaverhead-Deerlodge National Forest, 420 Barrett Street, Dillon, MT 59725, or by email to *pbates@fs.fed.us,* or via facsimile to (406) 683–3944.

A summary of the meeting will be posted at *https://fsplaces.fs.fed.us/fsfiles/unit/wo/secure_rural-schools.nsf/* within 21 days of the meeting.

Meeting Accommodations: If you are a person requiring reasonable accommodation, please make requests in advance for sign language interpreting, assistive listening devices or other reasonable accommodation for access to the facility or proceedings by contacting the person listed under **FOR FURTHER INFORMATION CONTACT**. All reasonable accommodation requests are managed on a case by case basis.

Dated: August 21, 2012.

David R. Myers,

Forest Supervisor.

[FR Doc. 2012–21172 Filed 8–28–12; 8:45 am]

BILLING CODE 3410–11–M

DEPARTMENT OF AGRICULTURE

Forest Service

Southwest Montana Resource Advisory Committee

AGENCY: Forest Service, USDA.

ACTION: Notice of meeting.

SUMMARY: The Southwest Montana Resource Advisory Committee will meet in Dillon, Montana. The committee is authorized under the Secure Rural Schools and Community Self-Determination Act (Pub. L. 112–141) (the Act) and operates in compliance with the Federal Advisory Committee Act. The purpose of the committee is to improve collaborative relationships and to provide advice and recommendations to the Forest Service concerning projects and funding consistent with the title II of the Act. The meeting is open to the public. The purpose of the meeting is review and recommend projects authorized under title II of the Act.

DATES: The meeting will be held September 20, 2012, 1:00 p.m.

ADDRESSES: The meeting will be held at 1116 Highway 41, Dillon, Montana at the Beaverhead County Search and Rescue Building. Written comments may be submitted as described under Supplementary Information. All comments, including names and addresses when provided, are placed in the record and are available for public inspection and copying. The public may inspect comments received at the Beaverhead-Deerlodge National Forest Headquarters, 420 Barrett Street, Dillon, Montana. Please call ahead to (406) 683–3900 to facilitate entry into the building to view comments.

FOR FURTHER INFORMATION CONTACT: Patty Bates, RAC Coordinator, Beaverhead-Deerlodge Forest, (406) 683–3979 and *pbates@fs.fed.us.* Individuals who use telecommunication devices for the deaf (TDD) may call the Federal Information Relay Service (FIRS) at 1–800–877–8339 between 8:00 a.m. and 8:00 p.m., Eastern Standard Time, Monday through Friday.

SUPPLEMENTARY INFORMATION: The subjects of the meeting are project proposal review, discussion of funding priorities, presentation of proposals, public input discussion, and recommendation to the Designated Federal Official. The full agenda and project proposals may be viewed at *https://fsplaces.fs.fed.us/fsfiles/unit/wo/secure_rural_schools.nsf/.* Anyone who would like to bring related matters to the attention of the committee may file written statements with the committee staff before or after the meeting. The agenda will include time for people to make oral statements of three minutes or less. Individuals wishing to make an oral statement should request in writing by September 15, 2012 to be scheduled

on the agenda. Written comments and requests for time for oral comments must be sent to Beaverhead-Deerlodge National Forest, 420 Barrett Street, Dillon, MT 59725, or by email to *pbates@fs.fed.us*, or via facsimile to (406) 683–3944.

A summary of the meeting will be posted at *https://fsplaces.fs.fed.us/fsfiles/unit/wo/secure_rural_schools.nsf/* within 21 days of the meeting.

Meeting Accommodations: If you are a person requiring reasonable accommodation, please make requests in advance for sign language interpreting, assisstive listening devices or other reasonable accommodation for access to the facility or proceedings by contacting the person listed under **FOR FURTHER INFORMATION CONTACT.** All reasonable accommodation requests are managed on a case by case basis.

Dated: August 21, 2012.

David R. Myers,

Forest Supervisor.

[FR Doc. 2012–21174 Filed 8–28–12; 8:45 am]

BILLING CODE 3410–11–M

DEPARTMENT OF AGRICULTURE

Forest Service

Central Idaho Resource Advisory Committee

AGENCY: Forest Service, USDA.

ACTION: Notice of meeting.

SUMMARY: The Central Idaho Resource Advisory Committee will meet in Salmon, Idaho and Challis, Idaho. The committee is authorized under the Secure Rural Schools and Community Self-Determination Act (Pub. L. 110–343) (the Act) and operates in compliance with the Federal Advisory Committee Act. The purpose of the committee is to improve collaborative relationships and to provide advice and recommendations to the Forest Service concerning projects and funding consistent with the title II of the Act. The meeting is open to the public. The purpose of the meeting is to review and recommend projects to be funded under Public Law 112–141.

DATES: The meetings will be held September 11 and 18, 2012 at 9:00 a.m.

ADDRESSES: The September 11, 2012 meeting will be held at the Public Lands Center 1206 S. Challis Street, Salmon, Idaho 83467, the September 18, 2012 meeting will be held at the Challis-Yankee Fork Ranger Station H/C 63 Box 1669, Challis, Idaho 83226.

All comments, including names and addresses when provided, are placed in the record and are available for public inspection and copying. The public may inspect comments received at Public Lands Center 1206 S. Challis Street, Salmon, Idaho 83467. Please call ahead to 208–756–5192 to facilitate entry into the building to view comments.

FOR FURTHER INFORMATION CONTACT: Karen E. Dunlap, Resource Advisory Committee Coordinator, 208–756–5192 (voice) or 208–756–5151 (fax) or email *kdunlap@fs.fed.us.*

Individuals who use telecommunication devices for the deaf (TDD) may call the Federal Information Relay Service (FIRS) at 1–800–877–8339 between 8:00 a.m. and 8:00 p.m., Eastern Standard Time, Monday through Friday. Requests for reasonable accommodation for access to the facility or proceedings may be made by contacting the person listed For Further Information.

SUPPLEMENTARY INFORMATION: The following business will be conducted: monitoring of projects being implemented under Public Law 110–343 and if authorized by the Secretary of Agriculture by the meeting date, to review and recommend projects to be funded under Public Law 112–141. An agenda will be posted at the following Web site address in advance of the meeting date: *http://www.fs.usda.gov/scnf/.* Individuals wishing to propose projects for possible funding by the CIRAC may do so by submitting proposals in writing by September 7, 2012 to Public Lands Center Attn: Karen Dunlap, 1206 S. Challis Street, Salmon, Idaho 83467 or by email to *kdunlap@fs.fed.us,* or via facsimile to 208–756–5151 in order to be scheduled on the agenda. A summary of the meeting will be posted at *http://www.fs.usda.gov/scnf/* within 21 days of the meeting.

Dated: August 23, 2012.

Frank V. Guzman,

Forest Supervisor.

[FR Doc. 2012–21363 Filed 8–28–12; 8:45 am]

BILLING CODE 3410–11–P

DEPARTMENT OF COMMERCE

Foreign-Trade Zones Board

[B–52–2012]

Foreign-Trade Zone 26—Atlanta, GA, Application for Reorganization (Expansion of Service Area), Under the Alternative Site Framework, Amendment of Application

A request has been submitted to the Foreign-Trade Zones Board (the Board) by the Georgia Foreign-Trade Zone Inc., grantee of FTZ 26, to amend the application to expand its service area under the alternative site framework to include the entirety of Columbia County, Georgia.

Public comment is invited from interested parties. Submissions shall be addressed to the Board's Executive Secretary at: Foreign-Trade Zones Board, U.S. Department of Commerce, Room 21013, 1401 Constitution Ave. NW., Washington, DC 20230.

The closing period for their receipt is September 28, 2012. Rebuttal comments in response to material submitted during the foregoing period may be submitted during the subsequent 15-day period (to October 15, 2012).

For further information, contact Kathleen Boyce at *Kathleen.Boyce@trade.gov* or (202) 482–1346.

Dated: August 22, 2012.

Andrew McGilvray,

Executive Secretary.

[FR Doc. 2012–21349 Filed 8–28–12; 8:45 am]

BILLING CODE P

DEPARTMENT OF COMMERCE

Foreign-Trade Zones Board

[Order No. 1848]

Expansion of Foreign-Trade Zone 61, San Juan, Puerto Rico

Pursuant to its authority under the Foreign-Trade Zones Act of June 18, 1934, as amended (19 U.S.C. 81a–81u), the Foreign-Trade Zones Board (the Board) adopts the following Order:

Whereas, the Puerto Rico Trade and Export Company, grantee of Foreign-Trade Zone 61, submitted an application to the Board for authority to expand FTZ 61 to include a site in Aguadilla, Puerto Rico, adjacent to the San Juan U.S. Customs and Border Protection port of entry (FTZ Docket 72–2011, filed November 9, 2011);

Whereas, notice inviting public comment has been given in the **Federal Register** (76 FR 70703–70704, 11/15/2011) and the application has been processed pursuant to the FTZ Act and the Board's regulations; and,

Whereas, the Board adopts the findings and recommendations of the examiner's report, and finds that the requirements of the FTZ Act and the Board's regulations are satisfied, and that the proposal is in the public interest;

Now, therefore, the Board hereby orders:

The application to expand FTZ 61 is approved, subject to the FTZ Act and

the Board's regulations, including Section 400.13, and to sunset provisions that would terminate authority on August 31, 2017, for Sites 1, 11–13, 17–22, and on August 31, 2022, for Site 24, where no activity has occurred under FTZ procedures before those dates.

Signed at Washington, DC, this 17th day of August 2012.

Ronald K. Lorentzen,

Acting Assistant Secretary of Commerce for Import Administration, Alternate Chairman, Foreign-Trade Zones Board.

Attest:

Andrew McGilvray,

Executive Secretary.

[FR Doc. 2012–21342 Filed 8–28–12; 8:45 am]

BILLING CODE P

DEPARTMENT OF COMMERCE

International Trade Administration

[A–570–890]

Wooden Bedroom Furniture From the People's Republic of China: Partial Rescission of Antidumping Duty Administrative Review and Intent To Rescind, in Part

AGENCY: Import Administration, International Trade Administration, Department of Commerce.

DATES: *Effective Date:* August 29, 2012.

FOR FURTHER INFORMATION CONTACT: Rebecca Pandolph or Patrick O'Connor, AD/CVD Operations, Office 4, Import Administration, International Trade Administration, U.S. Department of Commerce, 14th Street and Constitution Avenue NW., Washington, DC 20230, telephone: (202) 482–3627 or (202) 482–0989, respectively.

SUPPLEMENTARY INFORMATION:

Background

On January 4, 2005, the Department of Commerce (Department) published in the **Federal Register** the antidumping duty order on wooden bedroom furniture from the People's Republic of China (PRC).[1] On January 3, 2012, the Department published a notice of opportunity to request an administrative review of the wooden bedroom furniture order.[2]

The Department received multiple timely requests for an administrative review of the wooden bedroom furniture order and on February 29, 2012, in accordance with section 751(a) of Tariff Act of 1930, as amended (the Act), published in the **Federal Register** a notice of the initiation of an administrative review of that order.[3] The administrative review was initiated with respect to 191 companies or groups of companies, and covers the period from January 1, 2011, through December 31, 2011.

Rescission of Review, in Part

Pursuant to 19 CFR 351.213(d)(1), the Department will rescind an administrative review, in whole or in part, if the party that requested the review withdraws its request within 90 days of the date of publication of the notice of initiation of the requested review. Because all requesting parties withdrew their respective requests for an administrative review of the entities listed in Appendix I, within 90 days of the date of publication of the *Initiation Notice,* the Department is rescinding this review, in part, with respect to these entities, in accordance with 19 CFR 351.213(d)(1).[4] The entities listed in Appendix I had a separate rate granted in a previously completed segment of this proceeding that was in effect during the instant review period.

Intent To Rescind the Review, in Part

As noted above, we are rescinding the review of the entities which had received separate rates in previous segments of this proceeding. In addition the remaining companies under review that did not demonstrate eligibility for a separate rate effectively became part of the PRC-wide entity. Accordingly, while the requests for review of those companies were withdrawn by all parties, those withdrawn companies remain under review as part of the PRC-wide entity and we will make a determination with respect to the PRC-wide entity at the final results. A complete list of these entities without separate rates for which we intend to rescind the review at the final results is contained in Appendix II.

Assessment

For the entities in Appendix I for which the Department has rescinded this review and which had a separate rate granted in a previously completed segment of this proceeding that was in effect during the instant review period, the Department intends to issue appropriate assessment instructions directly to U.S. Customs and Border Protection 15 days after the publication of this notice in the **Federal Register**. For these entities, antidumping duties shall be assessed on period of review entries subject to the separate rates at rates equal to the cash deposit of estimated antidumping duties required at the time of entry, or withdrawal from warehouse, for consumption, in accordance with 19 CFR 351.212(c)(1)(i).

For the entities in Appendix II for which the Department intends to rescind the individual review of the entity in the final results, but which are part of the PRC-wide entity during the instant review period (*i.e.,* have not established their eligibility for a separate rate), the Department will issue assessment instructions 15 days after publication of the final results of this review.

In addition, pursuant to an injunction issued in *Legacy Classic Furniture, Inc.* v. *United States,* CIT No.10–00352 on December 28, 2010, the Department must continue to suspend liquidations of entries of the heritage court bench (model 800–4800) which were imported by Legacy Classic Furniture, Inc. pending a conclusive court decision.

Notification to Importers

This notice serves as a final reminder to importers whose entries will be liquidated as a result of this rescission notice, of their responsibility under 19 CFR 351.402(f) to file a certificate regarding the reimbursement of antidumping duties prior to liquidation of the relevant entries during this review period. Failure to comply with this requirement could result in the Secretary's assumption that reimbursement of antidumping duties occurred and subsequent assessment of double antidumping duties.

Notification Regarding Administrative Protective Orders (APOs)

This notice also serves as a reminder to parties subject to APOs of their responsibility concerning the return or destruction of proprietary information disclosed under an APO in accordance with 19 CFR 351.305(a)(3), which continues to govern business proprietary information in this segment of the proceeding. Timely written notification of the return/destruction of APO materials or conversion to judicial protective order is hereby requested. Failure to comply with the regulations and terms of an APO is a violation which is subject to sanction.

[1] *See Notice of Amended Final Determination of Sales at Less Than Fair Value and Antidumping Duty Order: Wooden Bedroom Furniture From the People's Republic of China,* 70 FR 329 (January 4, 2005).

[2] *See Antidumping or Countervailing Duty Order, Finding, or Suspended Investigation; Opportunity To Request Administrative Review,* 77 FR 83 (January 3, 2012).

[3] *See Wooden Bedroom Furniture From the People's Republic of China: Initiation of Administrative Review,* 77 FR 12235 (February 29, 2012) (*Initiation Notice*).

[4] *See* Appendix I.

This notice is issued and published in accordance with section 777(i)(1) of the Act, and 19 CFR 351.213(d)(4).

Dated: August 20, 2012.

Gary Taverman,

Senior Advisor for Antidumping and Countervailing Duty Operations.

Appendix I

The following companies were named in our *Initiation Notice.* Subsequently, interested parties timely withdrew all requests for review of these companies. Therefore, pursuant to 19 CFR 351.213(d)(1), we are rescinding this administrative review with respect to these companies:

- Art Heritage International, Ltd.; Super Art Furniture Co., Ltd.; Artwork Metal & Plastic Co., Ltd.; Jibson Industries Ltd.; Always Loyal International
- Changshu HTC Import & Export Co., Ltd.
- Cheng Meng Furniture (Pte) Ltd.; Cheng Meng Decoration & Furniture (Suzhou) Co., Ltd.
- Chuan Fa Furniture Factory
- COE Ltd.
- Dalian Huafeng Furniture Co., Ltd./Dalian Huafeng Furniture Group Co., Ltd.
- Decca Furniture Ltd.
- Dongguan Bon Ten Furniture Co., Ltd.
- Dongguan Cambridge Furniture Co., Ltd.; Glory Oceanic Co., Ltd.
- Dongguan Grand Style Furniture Co., Ltd.; Hong Kong Da Zhi Furniture Co., Ltd.
- Dongguan Great Reputation Furniture Co., Ltd.
- Dongguan Hero Way Woodwork Co., Ltd.; Dongguan Da Zhong Woodwork Co., Ltd.; Hero Way Enterprises Ltd.; Well Earth International Ltd.
- Dongguan Hung Sheng Artware Products Co., Ltd.; Coronal Enterprise Co., Ltd.
- Dongguan Kin Feng Furniture Co., Ltd.
- Dongguan Kingstone Furniture Co., Ltd.; Kingstone Furniture Co., Ltd.
- Dongguan Liaobushangdun Huada Furniture Factory; Great Rich (Hk) Enterprises Co., Ltd.
- Dongguan Lung Dong Furniture Co., Ltd.; Dongguan Dong He Furniture Co., Ltd.
- Dongguan Mingsheng Furniture Co., Ltd.
- Dongguan Mu Si Furniture Co., Ltd.
- Dongguan Singways Furniture Co., Ltd.
- Dongguan Sunrise Furniture Co., Ltd.; Taicang Sunrise Wood Industry Co., Ltd.; Taicang Fairmount Designs Furniture Co., Ltd.; Meizhou Sunrise Furniture Co., Ltd.
- Dongguan Sunshine Furniture Co., Ltd.
- Dongguan Yihaiwei Furniture Limited
- Dorbest Ltd.; Rui Feng Woodwork Co., Ltd. aka Rui Feng Woodwork (Dongguan) Co., Ltd.; Rui Feng Lumber Development Co., Ltd. aka Rui Feng Lumber Development (Shenzhen) Co., Ltd.
- Eurosa (Kunshan) Co., Ltd.; Eurosa Furniture Co., (Pte) Ltd.
- Fine Furniture (Shanghai) Ltd.
- Fuijian Lianfu Forestry Co, Ltd. aka Fujian Wonder Pacific Inc.; Fuzhou Huan Mei Furniture Co., Ltd.; Jiangsu Dare
- Garri Furniture (Dong Guan) Co., Ltd.; Molabile International, Inc.; Weei Geo Enterprise Co., Ltd.
- Guangzhou Maria Yee Furnishings Ltd.; Pyla HK, Ltd.; Maria Yee, Inc.
- Hainan Jong Bao Lumber Co., Ltd.; Jibbon Enterprise Co., Ltd.
- Hang Hai Woodcraft's Art Factory
- Jardine Enterprise, Ltd.
- Jiangmen Kinwai Furniture Decoration Co., Ltd.
- Jiangmen Kinwai International Furniture Co., Ltd.
- Jiangsu Xiangsheng Bedtime Furniture Co., Ltd.
- Jiangsu Yuexing Furniture Group Co., Ltd.
- Jiedong Lehouse Furniture Co., Ltd.
- Kuan Lin Furniture (Dong Guan) Co., Ltd.; Kuan Lin Furniture Factory; Kuan Lin Furniture Co., Ltd.
- Kunshan Lee Wood Product Co., Ltd.
- Kunshan Summit Furniture Co., Ltd.
- Langfang Tiancheng Furniture Co., Ltd.
- Leefu Wood (Dongguan) Co., Ltd.; King Rich International, Ltd.
- Locke Furniture Factory; Kai Chan Furniture Co., Ltd.; Kai Chan (Hong Kong) Enterprise Ltd.; Taiwan Kai Chan Co., Ltd.
- Longkou Huangshan Furniture Factory
- Longrange Furniture Co., Ltd.
- Meikangchi (Nantong) Furniture Company Ltd.
- Nanhai Baiyi Woodwork Co., Ltd.
- Nanhai Jiantai Woodwork Co., Ltd.; Fortune Glory Industrial Ltd. (H.K. Ltd.)
- Nanjing Nanmu Furniture Co., Ltd.
- Nantong Dongfang Orient Furniture Co., Ltd.
- Nathan International Ltd.; Nathan Rattan Factory
- Passwell Corporation; Pleasant Wave Ltd.
- Perfect Line Furniture Co., Ltd.
- Prime Wood International Co., Ltd; Prime Best International Co., Ltd.; Prime Best Factory; Liang Huang (Jiaxing) Enterprise Co., Ltd.
- Putian Jinggong Furniture Co., Ltd.
- Qingdao Liangmu Co., Ltd.
- Qingdao Shengchang Wooden Co., Ltd.
- Restonic (Dongguan) Furniture Ltd.; Restonic Far East (Samoa) Ltd.
- Rizhao Sanmu Woodworking Co., Ltd.
- Season Furniture Manufacturing Co.; Season Industrial Development Co.
- Sen Yeong International Co., Ltd.; Sheh Hau International Trading Ltd.
- Shanghai Fangjia Industry Co. Ltd.
- Shanghai Jian Pu Export & Import Co., Ltd.
- Shenyang Shining Dongxing Furniture Co., Ltd.
- Shenzhen Forest Furniture Co., Ltd.
- Shenzhen Jiafa High Grade Furniture Co., Ltd.; Golden Lion International Trading Ltd.
- Shenzhen New Fudu Furniture Co., Ltd.
- Shenzhen Shen Long Hang Industry Co., Ltd.
- Shenzhen Wonderful Furniture Co., Ltd.
- Shing Mark Enterprise Co., Ltd.; Carven Industries Limited (BVI); Carven Industries Limited (HK); Dongguan Zhenxin Furniture Co., Ltd.; Dongguan Yongpeng Furniture Co., Ltd.
- Shun Feng Furniture Co., Ltd.
- Songgang Jasonwood Furniture Factory; Jasonwood Industrial Co., Ltd. S.A.
- Starwood Industries Ltd.
- Strongson Furniture (Shenzhen) Co., Ltd.; Strongson Furniture Co., Ltd.; Strongson (HK) Co.
- Sunforce Furniture (Hui-Yang) Co., Ltd.; Sun Fung Wooden Factory; Sun Fung Co.; Shin Feng Furniture Co., Ltd.; Stupendous International Co., Ltd.
- Superwood Co., Ltd.; Lianjiang Zongyu Art Products Co., Ltd.
- Teamway Furniture (Dong Guan) Ltd.; Brittomart Inc.
- Techniwood Industries Ltd.; Ningbo Furniture Industries Limited; Ningbo Hengrun Furniture Co. Ltd.
- Tianjin Fortune Furniture Co., Ltd.
- Tianjin Phu Shing Woodwork Enterprise Co., Ltd.
- Tradewinds Furniture Ltd.; Fortune Glory Industrial Ltd. (H. K. Ltd.)
- Transworld (Zhang Zhou) Furniture Co. Ltd.
- Tube-Smith Enterprise (Zhangzhou) Co., Ltd.; Tube-Smith Enterprise (Haimen) Co., Ltd.; Billionworth Enterprises Ltd.
- U-Rich Furniture (Zhangzhou) Co., Ltd.; U-Rich Furniture Ltd.
- Wanhengtong Nueevder (Furniture) Manufacture Co., Ltd.; Dongguan Wanengtong Industry Co., Ltd.
- Wanvog Furniture (Kunshan) Co., Ltd.
- Winny Overseas, Ltd.; Zhongshan Winny Furniture Ltd.; Winny Universal Ltd.
- Woodworth Wooden Industries (Dong Guan) Co., Ltd.
- Xiamen Yongquan Sci-Tech Development Co., Ltd.
- Xilinmen Furniture Co., Ltd.
- Yihua Timber Industry Co., Ltd.; Guangdong Yihua Timber Industry Co., Ltd.
- Zhang Zhou Sanlong Wood Product Co., Ltd.
- Zhangjiagang Daye Hotel Furniture Co., Ltd.
- Zhangjiagang Zheng Yan Decoration Co., Ltd.
- Zhangjiang Sunwin Arts & Crafts Co., Ltd.
- Zhangzhou Guohui Industrial & Trade Co. Ltd.
- Zhong Shan Fullwin Furniture Co., Ltd.
- Zhongshan Fookyik Furniture Co., Ltd.
- Zhongshan Golden King Furniture Industrial Co., Ltd.
- Zhoushan For-Strong Wood Co., Ltd.

Appendix II

The following companies were named in our *Initiation Notice.* Although we may determine that more companies are subject to the PRC-wide rate upon the completion of our *Final Results,* this is a preliminary list of companies that have failed to establish a separate rate and will be subject to the PRC-wide entity rate:

- Brother Furniture Manufacture Co., Ltd.
- C.F. Kent Co., Inc.
- C.F. Kent Hospitality, Inc.
- Champion Sun Industries Limited
- Contact Co., Ltd.
- Creation Industries Co., Ltd.
- Denny's Furniture Associates Corp.
- Denny's International Co., Ltd.
- Der Chang Wooden Works
- Der Cheng Furniture Co., Ltd.
- Dong Guan Golden Fortune Houseware Co., Ltd.
- Dongguan Chunsan Wood Products Co., Ltd.
- Dongguan Creation Furniture Co., Ltd.
- Dongguan Haoshun Furniture Ltd.
- Dongguan Hua Ban Furniture Co., Ltd.

- Dongguan Landmark Furniture Products Ltd.
- Dongguan Sundart Timber Products Co., Ltd.
- Dongguan Sunrise Furniture Co.
- Ever Spring Furniture Co., Ltd.
- Evershine Enterprise Co.
- Fairmont Designs
- Fleetwood Fine Furniture Lp.
- Forward Win Enterprises Co. Ltd.
- Foshan Guanqiu Furniture Co., Ltd.
- Fujian Putian Jinggong Furniture Co., Ltd.
- Gainwell Industries Limited.
- Gotop Global Inc.
- Gotop Global Ltd.
- Green River Wood (Dongguan) Ltd.
- Guangdong Gainwell Industrial Furniture Co., Ltd.
- Guangdong Sunwin Green Furniture Industry Group Co., Ltd.
- Hong Kong Jingbi Group.
- Huasen Furniture Co., Ltd.
- Jiangsu Weifu Group Fullhouse Furniture Manufacturing Corp.
- Jiant Furniture Co., Ltd.
- King Kei Trading Company Limited
- King's Way Furniture Industries Co., Ltd.
- Kingsyear, Ltd.
- Link Silver Ltd. (V.I.B.)
- Marvin Furniture (Shanghai) Co. Ltd.
- Moonart Furniture Group.
- Moonart International Inc.
- Nanjing Jardine Enterprises, Ltd.
- Nantong Yangzi Furniture Co., Ltd.
- Nantong Yushi Furniture Co., Ltd.
- Ningbo Fubang Furniture Industries Limited
- Ningbo Furniture Industries Company Ltd.
- Ningbo Techniwood Furniture Industries Limited
- Northeast Lumber Co., Ltd.
- Passwell Wood Corporation
- S.Y.C Family Enterprise Co., Ltd.
- Samso Industries Ltd.
- Senyuan Furniture Group.
- Shanghai Aosen Furniture Co., Ltd.
- Shanghai Hospitality Product Mfg., Co., Ltd.
- Shanghai Industries Group
- Shanghai Kent Furniture Co., Ltd.
- Shanghai Season Industry & Commerce Co., Ltd.
- Shanghai Sunrise Furniture Co., Ltd.
- Shanghai Zhiyi (Jiashun) Furniture Co., Ltd.
- Shanghai Zhiyi Furniture And Decoration Co., Ltd.
- Shaoxing Mengxing Furniture Co., Ltd.
- Shenzhen Xiande Furniture Factory
- Starwood Furniture Manufacturing Co., Ltd
- Sundart International, Ltd.
- Tarzan Furniture Industries, Ltd.
- Techniwood (Macao Commercial Offshore) Limited
- Tianjin Master Home Furniture Company
- Tradewinds International Enterprise Ltd.
- Trendex Industries Limited
- Wan Bao Chen Group Hong Kong Co., Ltd.
- World Design International Co., Ltd.
- Xingli Arts & Crafts Factory Of Yangchun
- Yuexing Group Co., Ltd.
- Zhejiang Shaoxing Huaweimei Furniture Co., Ltd.
- Zhong Shan Heng Fu Furniture Co.
- Zhongshan Fengheng Furniture Co., Ltd.
- Zhongshan Gainwell Furniture Co., Ltd.
- Zhongshan Gotop Furniture Co., Ltd
- Zhongshang Yiming Furniture Co., Ltd.

[FR Doc. 2012–21341 Filed 8–28–12; 8:45 am]

BILLING CODE 3510–DS–P

DEPARTMENT OF COMMERCE

International Trade Administration

Notice of Scope Rulings

AGENCY: Import Administration, International Trade Administration, Department of Commerce.

DATES: *Effective Date:* August 29, 2012.

SUMMARY: The Department of Commerce (''Department'') hereby publishes a list of scope rulings and anticircumvention determinations completed between April 1, 2012, and June 30, 2012. We intend to publish future lists after the close of the next calendar quarter.

FOR FURTHER INFORMATION CONTACT: Jennifer Moats, AD/CVD Operations, China/NME Group, Import Administration, International Trade Administration, U.S. Department of Commerce, 14th Street and Constitution Avenue NW., Washington, DC 20230; telephone: 202–482–5047.

SUPPLEMENTARY INFORMATION:

Background

The Department's regulations provide that the Secretary will publish in the **Federal Register** a list of scope rulings on a quarterly basis.[1] Our most recent notification of scope rulings was published on August 20, 2012.[2] This current notice covers all scope rulings and anticircumvention determinations completed by Import Administration between April 1, 2012, and June 30, 2012, inclusive. As described below, subsequent lists will follow after the close of each calendar quarter.

Scope Rulings Completed Between April 1, 2012, and June 30, 2012

People's Republic of China

A–570–504: Petroleum Wax Candles from the People's Republic of China

Requestor: HSE USA, Inc.; its religious cross with Jesus series and column candle with angel are within the scope of the antidumping duty order; June 20, 2012.

A–570–506: Porcelain-On-Steel Cooking Ware from the People's Republic of China

Requestor: The Coleman Company, Inc.; the stockpot locking lid of its Signature Series All-In-One Cooking System And Max Series is within the scope of the antidumping duty order; the stockpot cooking base of its Signature Series All-In-One Cooking System And Max Series is not within the scope of the antidumping duty order; May 7, 2012.

A–570–910/C–570–911: Circular Welded Carbon Quality Steel Pipe from the People's Republic of China

Requestor: All Tools Inc.; electrical rigid metal conduit steel and electrical metallic tubing are not within the scope of the antidumping and countervailing duty orders; May 21, 2012.

A–570–967/C–570–968: Aluminum Extrusions from the People's Republic of China

Requestor: Ameristar Fence Products (''Ameristar''); its aluminum ornamental fence and post products are within the scope of the antidumping and countervailing duty orders; preliminary ruling June 1, 2012.

Multiple Countries

None.[3]

Anticircumvention Determinations Completed Between April 1, 2012, and June 30, 2012:

None.

Interested parties are invited to comment on the completeness of this list of completed scope and anticircumvention inquiries. Any comments should be submitted to the Deputy Assistant Secretary for AD/CVD Operations, Import Administration, International Trade Administration, 14th Street and Constitution Avenue NW., APO/Dockets Unit, Room 1870, Washington, DC 20230.

This notice is published in accordance with 19 CFR 351.225(o).

Dated: August 22, 2012.

Gary Taverman,

Senior Advisor for Antidumping and Countervailing Duty Operations.

[FR Doc. 2012–21329 Filed 8–28–12; 8:45 am]

BILLING CODE 3510–DS–P

[1] *See* 19 CFR 351.225(o).

[2] *See Notice of Scope Rulings,* 77 FR 50084 (August 20, 2012).

[3] In the previous notice of scope rulings, the Department indicated it had completed the scope review of magnesia carbon bricks from Mexico and the People's Republic of China, requested by Fedmet Resources Corporation (''Fedmet''), on March 30, 2012. *See Notice of Scope Rulings,* 77 FR at 50085. The notice should have indicated that the ruling, finding Fedmet's magnesia alumina carbon bricks within the scope of the antidumping and countervailing duty orders, was preliminary.

DEPARTMENT OF COMMERCE

National Oceanic and Atmospheric Administration

RIN 0648–XC193

Atlantic Highly Migratory Species; Meeting of the Atlantic Highly Migratory Species Advisory Panel

AGENCY: National Marine Fisheries Service (NMFS), National Oceanic and Atmospheric Administration (NOAA), Commerce.

ACTION: Notice of public meeting.

SUMMARY: NMFS will hold a 3-day Atlantic Highly Migratory Species (HMS) Advisory Panel (AP) meeting in September 2012. The intent of the meeting is to consider options for the conservation and management of Atlantic HMS. The meeting is open to the public.

DATES: The AP meeting will be held September 19, 2012, through September 21, 2012. (See **SUPPLEMENTARY INFORMATION** for further details.)

ADDRESSES: The meeting will be held at the DoubleTree by Hilton Hotel, 8120 Wisconsin Avenue, Bethesda, MD 20814.

FOR FURTHER INFORMATION CONTACT: Jenni Wallace or Margo Schulze-Haugen at (301) 427–8503.

SUPPLEMENTARY INFORMATION: The Magnuson-Stevens Fishery Conservation and Management Act, 16 U.S.C. 1801 *et seq.,* as amended by the Sustainable Fisheries Act, Public Law 104–297, provided for the establishment of an AP to assist in the collection and evaluation of information relevant to the development of any Fishery Management Plan (FMP) or FMP amendment for Atlantic HMS. NMFS consults with and considers the comments and views of AP members when preparing and implementing FMPs or FMP amendments for Atlantic tunas, swordfish, billfish, and sharks.

The AP has previously consulted with NMFS on: Amendment 1 to the Billfish FMP (April 1999); the HMS FMP (April 1999); Amendment 1 to the HMS FMP (December 2003); the Consolidated HMS FMP (October 2006); Amendments 1, 2, 3, 4, 5, 6, 7, and 8 to the Consolidated HMS FMP (April and October 2008, February and September 2009, May and September 2010, April and September 2011, and March 2012); among other things.

At the September 2012 AP meeting, NMFS plans to discuss overall bluefin tuna management (Amendment 7), shark management measures such as rebuilding scalloped hammerhead, dusky, and blacknose sharks (Amendment 5) and catch shares, swordfish management measures (Amendment 8), and items contained in the Advanced Notice of Proposed Rulemaking that published on June 1, 2009 (74 FR 26174), which considered a variety of potential management options/measures for HMS fisheries. The meeting will also include updates on implementation of the 2011 ICCAT recommendations; electronic dealer reporting; smoothhound shark management; and recreational monitoring methods for Atlantic HMS fisheries.

The AP meeting will be held from 1 p.m. to 6 p.m. on Wednesday, September 19; from 8:30 a.m. to 6 p.m. on Thursday, September 20; and from 8:30 a.m. to 1 p.m. on Friday, September 21. Additional information on the meeting and a copy of the draft agenda may be found at: *http://www.nmfs.noaa.gov/sfa/hms/Advisory%20Panels/Advisory_Panel.htm.*

Special Accommodations

This meeting is physically accessible to people with disabilities. Requests for sign language interpretation or other auxiliary aids should be directed to Jenni Wallace at (301) 427–8503 at least 7 days prior to the meeting.

Dated: August 24, 2012.

Lindsay Fullenkamp,

Acting Deputy Director, Office of Sustainable Fisheries, National Marine Fisheries Service.

[FR Doc. 2012–21316 Filed 8–28–12; 8:45 am]

BILLING CODE 3510–22–P

DEPARTMENT OF COMMERCE

National Oceanic and Atmospheric Administration

RIN 0648–XC199

New England Fishery Management Council; Public Meeting

AGENCY: National Marine Fisheries Service (NMFS), National Oceanic and Atmospheric Administration (NOAA), Commerce.

ACTION: Notice; public meeting.

SUMMARY: The New England Fishery Management Council (Council) is scheduling a public meeting of its Scallop Advisory Panel to consider actions affecting New England fisheries in the exclusive economic zone (EEZ). Recommendations from this group will be brought to the full Council for formal consideration and action, if appropriate.

DATES: This meeting will be held on Monday, September 17, 2012 at 9 a.m.

ADDRESSES: The meeting will be held at the Fairfield Inn & Suites, 185 MacArthur Drive, New Bedford, MA 02740; telephone: (774) 634–2000; fax: (774) 634–2001.

Council address: New England Fishery Management Council, 50 Water Street, Mill 2, Newburyport, MA 01950.

FOR FURTHER INFORMATION CONTACT: Paul J. Howard, Executive Director, New England Fishery Management Council; telephone: (978) 465–0492.

SUPPLEMENTARY INFORMATION: The Advisors will review scallop survey information and recommendations from the Scallop Plan Development Team for possible fishery specifications for FY2013 and FY2014 (Framework 24). The Advisors will also provide input on other measures under consideration: (1) Possible modification of Georges Bank access area opening dates; (2) measures to address sub-ACL of yellowtail flounder for the LAGC trawl fishery; (3) modification of the effective date of yellowtail sub-ACL AMs from Year 2 to Year 3; (4) leasing LAGC IFQ mid-year; and (5) expanding the observer set-aside program to include LAGC open area trips. The Advisors will discuss possible priorities for scallop related actions next year and make recommendations to the Scallop Committee for consideration. Other business may be discussed.

Although non-emergency issues not contained in this agenda may come before this group for discussion, those issues may not be the subject of formal action during this meeting. Action will be restricted to those issues specifically listed in this notice and any issues arising after publication of this notice that require emergency action under section 305(c) of the Magnuson-Stevens Act, provided the public has been notified of the Council's intent to take final action to address the emergency.

Special Accommodations

This meeting is physically accessible to people with disabilities. Requests for sign language interpretation or other auxiliary aids should be directed to Paul J. Howard, Executive Director, at (978) 465–0492, at least 5 days prior to the meeting date.

Authority: 16 U.S.C. 1801 *et seq.*

Dated: August 24, 2012.

William D. Chappell,

Acting Deputy Director, Office of Sustainable Fisheries, National Marine Fisheries Service.

[FR Doc. 2012–21319 Filed 8–28–12; 8:45 am]

BILLING CODE 3510–22–P

DEPARTMENT OF COMMERCE

National Oceanic and Atmospheric Administration

RIN 0648–XC191

North Pacific Fishery Management Council; Public Meetings

AGENCY: National Marine Fisheries Service (NMFS), National Oceanic and Atmospheric Administration (NOAA), Commerce.

ACTION: Notice of public meetings.

SUMMARY: The North Pacific Fishery Management Council's (Council) Observer Advisory Committee (OAC) will meet in Seattle, WA.

DATES: The meeting will be held September 17–18, 2012 from 8:30 a.m. to 4:30 p.m.

ADDRESSES: The meeting will be held at the Alaska Fishery Science Center, 7600 Sand Point Way NE., Building 4, Observer Training Room, Seattle, WA 98115.

Council address: North Pacific Fishery Management Council, 605 W. 4th Ave., Suite 306, Anchorage, AK 99501–2252.

FOR FURTHER INFORMATION CONTACT: Diana Evans, Council staff, telephone: (907) 271–2809.

SUPPLEMENTARY INFORMATION: The agenda items include: Council direction on OAC; Update on implementation of observer restructuring; Update on the development of the final rule; Getting the nuts and bolts in place for implementation; Planned outreach and education efforts; Registration system and brief demonstration: Draft 2013 observer deployment plan; Presentation of deployment plan; Discussion and recommendations on deployment plan; Electronic monitoring; Update on national white papers on electronic monitoring; Update on EM halibut fleet pilot project; Discuss development of EM as part of restructured program; Required elements for regulating EM; Public comment; Discussion and recommendations; Scheduling & other issues. The Agenda is subject to change, and the latest version will be posted at *http://www.alaskafisheries.noaa.gov/npfmc/.*

Although non-emergency issues not contained in this agenda may come before this group for discussion, in accordance with the Magnuson-Stevens Fishery Conservation and Management Act (Magnuson-Stevens Act), those issues may not be the subject of formal action during these meetings. Actions will be restricted to those issues specifically identified in this notice and any issues arising after publication of this notice that require emergency action under Section 305(c) of the Magnuson-Stevens Act, provided the public has been notified of the Council's intent to take final action to address the emergency.

Special Accommodations

These meetings are physically accessible to people with disabilities. Requests for sign language interpretation or other auxiliary aids should be directed to Gail Bendixen at (907) 271–2809 at least 7 working days prior to the meeting date.

Dated: August 24, 2012.

William D. Chappell,

Acting Deputy Director, Office of Sustainable Fisheries, National Marine Fisheries Service.

[FR Doc. 2012–21320 Filed 8–28–12; 8:45 am]

BILLING CODE 3510–22–P

DEPARTMENT OF COMMERCE

National Oceanic and Atmospheric Administration

RIN 0648–XC200

Mid-Atlantic Fishery Management Council; Public Meeting

AGENCY: National Marine Fisheries Service (NMFS), National Oceanic and Atmospheric Administration (NOAA), Commerce.

ACTION: Notice of public meeting.

SUMMARY: The Mid-Atlantic Fishery Management Council will hold a public meeting.

DATES: The meetings will be held on Friday, September 14, 2012 beginning at 10 a.m.

ADDRESSES: The meeting will be held via webinar with a telephone connection option. Details on webinar registration and the connection details are available at: *http://www.mafmc.org.*

Council address: Mid-Atlantic Fishery Management Council, 800 North State Street, Suite 201, Dover, DE 19901; telephone: (302) 674–2331.

FOR FURTHER INFORMATION CONTACT: Christopher M. Moore, Ph.D., Executive Director, Mid-Atlantic Fishery Management Council, 800 North State Street, Suite 201, Dover, DE 19901; telephone: (302) 674–2331, extension 255.

SUPPLEMENTARY INFORMATION: The purpose of this webinar is to consider whether it is appropriate to recommend any changes to NMFS for the 2012 butterfish acceptable biological catch (ABC) and also whether the catch cap of butterfish for the longfin squid fishery should be altered to be a discard cap on the longfin squid fishery. This meeting would constitute ''Meeting 1'' of the 2-meeting framework adjustment process for ''Framework 7 to the Atlantic Mackerel, Squid, and Butterfish Fishery Management Plan.'' The second framework meeting would be at the October 2012 Council Meeting, which will be noticed separately. The meeting will be available via webinar via this link: *https://www1.gotomeeting.com/register/602201185.* Additional information about accessing the webinar on September 14 is available on the Council's Web site at *www.mafmc.org.* A public listening station to allow public access to the webinar will also be available at the Council offices located 800 N. State St., Suite 201, Dover, DE 19901.

Special Accommodations

The meeting is physically accessible to people with disabilities. Requests for sign language interpretation or other auxiliary aids should be directed to M. Jan Saunders at the Mid-Atlantic Council Office, (302) 526–5251, at least 5 days prior to the meeting date.

Dated: August 24, 2012.

William D. Chappell,

Acting Deputy Director, Office of Sustainable Fisheries, National Marine Fisheries Service.

[FR Doc. 2012–21321 Filed 8–28–12; 8:45 am]

BILLING CODE 3510–22–P

DEPARTMENT OF COMMERCE

United States Patent and Trademark Office

[Docket No. PTO–P–2012–0036]

September 15, 2012 Deadline to File Requests for Inter Partes Reexamination Proceedings and Modification of Notice of Failure to Comply Form

AGENCY: United States Patent and Trademark Office, Commerce.

ACTION: Notice.

SUMMARY: Pursuant to section 6(c)(3) of the Leahy-Smith America Invents Act (AIA), the authority to file *inter partes* reexamination requests terminates effective September 16, 2012. Accordingly, any original or corrected/replacement request for an *inter partes* reexamination submitted on or after September 16, 2012, will not be accorded a filing date, and any such request will not be granted. This notice provides guidance to *inter partes* reexamination requesters with respect to timely filing requests prior to September 16, 2012, i.e., by the September 15,

2012, last day for filing of an *inter partes* reexamination request.

FOR FURTHER INFORMATION CONTACT: Kenneth M. Schor, Senior Legal Advisor ((571) 272–7710), or Joseph F. Weiss, Jr., Legal Advisor ((571) 272–7759), Office of Patent Legal Administration, Office of the Deputy Commissioner for Patent Examination Policy.

SUPPLEMENTARY INFORMATION:

A. Filing Requests as Early as Possible

Requesters are advised to file any *inter partes* reexamination requests which they intend to file as soon as possible, in order to provide the United States Patent and Trademark Office (Office) with maximum time to: (i) Receive, process, and review such requests for their compliance with all the filing date requirements for *inter partes* reexamination; and (ii) notify the requester of any deficiencies in the request via a Notice of Failure to Comply with *Inter Partes* Reexamination Request Filing Requirements (Notice of Failure to Comply) while providing sufficient time for requester to submit a corrected/replacement request prior to September 16, 2012.

In this regard, it is to be noted that any *inter partes* reexamination request must meet all the filing date requirements for *inter partes* reexamination, i.e., it must be filing-date compliant, *prior to September 16, 2012.* If a timely filed *inter partes* reexamination request fails to meet any filing date requirement for *inter partes* reexamination, then the requester will be so notified and, if time allows, given an opportunity to complete the request by filing a corrected/replacement request by September 15, 2012. If the request papers are then made filing-date compliant by a response which is properly filed with the Office by September 15, 2012, the filing date of the response will be assigned to the request (this is also true for any *sua sponte* filed corrected/replacement request). If the corrected/replacement request is not received by the Office as of September 15, 2012, the corrected/replacement request will not be accorded a filing date, even though the original request was timely received by the Office. This is so, *regardless of when requester receives notification that the original request is not filing-date compliant.*

The Office will make every effort to promptly and efficiently process and review all requests for *inter partes* reexamination. It is to be emphasized, however, that the Office cannot guarantee that a Notice of Failure to Comply with *Inter Partes* Reexamination Request Filing Requirements will be issued by the Office prior to September 16, 2012, or even if it is so issued, that sufficient time will remain for the mailing to reach a requester and allow for response prior to September 16, 2012. While, traditionally, the Office has been setting a thirty-day period to respond to the Notice of Failure to Comply, this will no longer be possible for any Notice of Failure to Comply mailed after August 16, 2012, because the statute which provides for the filing of a request for *inter partes* reexamination will no longer be in effect as of September 16, 2012.

In view of the above, potential *inter partes* reexamination requesters are cautioned to file any such requests as soon as possible, in order to provide the Office with as much time as possible to receive the requests, process and review them, and notify requester with sufficient time to correct the request, if necessary, prior to September 16, 2012.

B. The Last Day to File an Inter Partes Reexamination Request

As mentioned above, section 6(c)(3) of the AIA statutorily terminates the authority for *inter partes* reexamination filings effective September 16, 2012. Since, *inter partes* reexamination filing is not available on or after September 16, 2012, the Office cannot grant a filing date to any *inter partes* reexamination request filed after September 15, 2012. In addition, as the termination of authority for *inter partes* reexamination filings in section 6(c)(3) of the AIA is not a time period for taking action under 35 U.S.C. 21(b), the provisions of 35 U.S.C. 21(b) do not authorize the Office to accept or accord a filing date to an original or corrected/replacement request for *inter partes* reexamination which is filed on or after September 16, 2012, even though September 15, 2012, the last day to file a request, is a Saturday.

An *inter partes* reexamination request can be submitted on Saturday, September 15, 2012, but only two methods are available to do so. The request may be submitted that Saturday: (1) Via the Office's Web-based electronic filing system, EFS-Web (see MPEP 502.05); or (2) by using the 37 CFR 1.10 ''Express Mail'' mailing procedure (see MPEP 513). No other method of submission is available for a Saturday. Thus, a request cannot be submitted on September 15, 2012, by hand, by courier, by facsimile transmission, or by mail other than Express Mail. If an attempt to do so is made, the request will not be received by the Office (on that Saturday), and a filing date will not be accorded to the request.

If an original or corrected/replacement *inter partes* reexamination request is mailed (by mail other than Express Mail), the requester should take into consideration mailing time and the fact that 37 CFR 1.8 certificate of mailing and transmission procedures are not available for filing an original or corrected/replacement request for reexamination (see MPEP 2624). Thus, requester should take care to mail the request sufficiently early for the Office to receive it by Friday, September 14, 2012 (the Office does not receive mail on Saturday, the 15th—see 37 CFR 1.6(a)(1)).

C. Modification of Notice of Failure to Comply Form

In view of the above:

1. Any Notice of Failure to Comply mailed prior to September 15, 2012, will reference September 15, 2012, as the due date for any corrected/replacement *inter partes* reexamination request.

2. Any Notice of Failure to Comply mailed on or after September 17, 2012, will not set a period for response, but will rather inform requester that no filing date can be granted for the request, because *inter partes* reexamination filing has been statutorily terminated.

Dated: August 23, 2012.

Teresa Stanek Rea,

Deputy Under Secretary of Commerce for Intellectual Property and Deputy Director of the United States Patent and Trademark Office.

[FR Doc. 2012–21224 Filed 8–28–12; 8:45 am]

BILLING CODE 3510–16–P

DEPARTMENT OF DEFENSE

Department of the Air Force

U.S. Air Force Academy Board of Visitors; Notice of Meeting

AGENCY: U.S. Air Force Academy Board of Visitors, DoD.

ACTION: Meeting notice.

SUMMARY: In accordance with 10 U.S.C. 9355, the United States Air Force Academy (USAFA) Board of Visitors (BoV) will hold a meeting in Harmon Hall at the United States Air Force Academy in Colorado Springs, Colorado on 14–15 Sep 12. The meeting sessions on 14 Sep will begin at 4 p.m. and the meeting sessions on 15 Sep will begin at 7:45 a.m. The purpose of this meeting is to review morale and discipline, social climate, curriculum, instruction, infrastructure, fiscal affairs, academic

methods, and other matters relating to the Academy. Specific topics for this meeting include the Status of the Climate Survey; Superintendent's Update; Character Update; USAFA Sexual Assault Prevention and Response Program; Critical Thinking Assessment Tool; and the Diversity in the Dean's Faculty brief. In accordance with 5 U.S.C. 552b, as amended, and 41 CFR 102–3.155, one session of this meeting be closed to the public because it will involve matters covered by 5 U.S.C. 552b subsection (c)(6). Public attendance at the open portions of this USAFA BoV meeting shall be accommodated on a first-come, first-served basis up to the reasonable and safe capacity of the meeting room. In addition, any member of the public wishing to provide input to the USAFA BoV should submit a written statement in accordance with 41 CFR 102–3.140(c) and section 10(a)(3) of the Federal Advisory Committee Act and the procedures described in this paragraph. Written statements must address the following details: the issue, discussion, and a recommended course of action. Supporting documentation must also be included as needed to establish the appropriate historical context and provide any necessary background information. Written statements can be submitted to the Designated Federal Officer (DFO) at the Air Force address detailed below at any time. However, if a written statement is not received at least 10 calendar days before the first day of the meeting which is the subject of this notice, then it may not be provided to, or considered by, the BoV until its next open meeting. The DFO will review all timely submissions with the BoV Chairperson and ensure they are provided to members of the BoV before the meeting that is the subject of this notice. For the benefit of the public, rosters that list the names of BoV members and any releasable materials presented during the open portions of this BoV meeting shall be made available upon request.

If, after review of timely submitted written comments, the BoV Chairperson and DFO deem appropriate, they may choose to invite the submitter of the written comments to orally present the issue during an open portion of the BoV meeting that is the subject of this notice. Members of the BoV may also petition the Chairperson to allow specific personnel to make oral presentations before the BoV. In accordance with 41 CFR 102–3.140(d), any oral presentations before the BoV shall be in accordance with agency guidelines provided pursuant to a written invitation and this paragraph. Direct questioning of BoV members or meeting participants by the public is not permitted except with the approval of the DFO and Chairperson.

FOR FURTHER INFORMATION CONTACT: For additional information or to attend this BoV meeting, contact Capt Bobby Hale, Accessions and Training Division, AF/A1PT, 1040 Air Force Pentagon, Washington, DC 20330, (703) 695–4066.

Henry Williams Jr.,

Acting Air Force Federal Register Liaison Officer.

[FR Doc. 2012–21334 Filed 8–28–12; 8:45 am]

BILLING CODE 5001–10–P

DEPARTMENT OF DEFENSE

Department of the Navy

Record of Decision for Surveillance Towed Array Sensor System Low Frequency Active Sonar

AGENCY: Department of the Navy, DoD.

ACTION: Notice of decision and availability.

SUMMARY: The Department of the Navy, after carefully weighing the operational, scientific, technical, and environmental implications of the alternatives considered, announces its decision to employ up to four Surveillance Towed Array Sensor System Low Frequency Active (SURTASS LFA) sonar systems with certain geographical restrictions and monitoring mitigation designed to reduce potential adverse effects on the marine environment. This decision, which pertains to the employment of up to four SURTASS LFA sonar systems (as originally analyzed in the 2001 Final Overseas Environmental Impact Statement and Environmental Impact Statement [FOEIS/EIS] for SURTASS LFA Sonar) initially augmented in the 2007 Final Supplemental Environmental Impact Statement [FSEIS]), and further augmented on the 2012 Final Supplemental Environmental Impact Statement/Overseas Environmental Impact Statement (FSEIS/SOEIS) implements the preferred alternative, Alternative 2, identified in the 2012 FSEIS/SOEIS for SURTASS LFA sonar.

SUPPLEMENTARY INFORMATION: The full text of the Record of Decision (ROD) is available for public viewing and download at *http://www.surtass-lfa-eis.com/.* Single copies of the ROD will be made available upon request by contacting the SURTASS LFA Sonar SEIS/SOEIS Team, 4100 N. Fairfax Dr., Suite 730, Arlington, VA 22203, or email: *eisteam@mindspring.com.*

Dated: August 17, 2012.

C.K. Chiappetta,

Lieutenant Commander, Office of the Judge Advocate General, U.S. Navy, Administrative Law Division, **Federal Register** *Liaison Officer.*

[FR Doc. 2012–21324 Filed 8–28–12; 8:45 am]

BILLING CODE 3810–FF–P

DEPARTMENT OF EDUCATION

Notice of Submission for OMB Review; Office of Planning, Evaluation and Policy Development; EDFacts Collection of ESEA Flexibility Data

SUMMARY: On September 23, 2011, the U.S. Department of Education (ED) invited State educational agencies (SEAs) to request flexibility pursuant to the authority in section 9401 of ESEA, which allows the Secretary of Education to waive, with certain exceptions, any statutory or regulatory requirement of the ESEA for an SEA that receives funds under a program authorized by the ESEA and requests a waiver. In order to ensure that SEAs receiving ESEA flexibility are continuing to meet the intent and purpose of Title I of ESEA, including meeting the educational needs of low-achieving students, closing achievement gaps, and holding schools, local educational agencies, and SEAs accountable for improving the academic achievement of all students, ED will continue to collect all data related to student proficiency rates as well as performance against the annual measurable objectives. This collection will be applicable to SEAs with approved flexibility requests.

DATES: Interested persons are invited to submit comments on or before September 28, 2012.

ADDRESSES: Written comments regarding burden and/or the collection activity requirements should be electronically mailed to *ICDocketMgr@ed.gov* or mailed to U.S. Department of Education, 400 Maryland Avenue SW., LBJ, Washington, DC 20202–4537. Copies of the proposed information collection request may be accessed from *http://edicsweb.ed.gov,* by selecting the ''Browse Pending Collections'' link and by clicking on link number 04860. When you access the information collection, click on ''Download Attachments'' to view. Written requests for information should be addressed to U.S. Department of Education, 400 Maryland Avenue SW., LBJ, Washington, DC 20202–4537. Requests may also be electronically mailed to *ICDocketMgr@ed.gov* or faxed to 202–401–0920. Please specify the

complete title of the information collection and OMB Control Number when making your request.

Individuals who use a telecommunications device for the deaf (TDD) may call the Federal Information Relay Service (FIRS) at 1–800–877–8339.

SUPPLEMENTARY INFORMATION: Section 3506 of the Paperwork Reduction Act of 1995 (44 U.S.C. Chapter 35) requires that Federal agencies provide interested parties an early opportunity to comment on information collection requests. The Director, Information Collection Clearance Division, Privacy, Information and Records Management Services, Office of Management, publishes this notice containing proposed information collection requests at the beginning of the Departmental review of the information collection. The Department of Education is especially interested in public comment addressing the following issues: (1) Is this collection necessary to the proper functions of the Department; (2) will this information be processed and used in a timely manner; (3) is the estimate of burden accurate; (4) how might the Department enhance the quality, utility, and clarity of the information to be collected; and (5) how might the Department minimize the burden of this collection on the respondents, including through the use of information technology. Please note that written comments received in response to this notice will be considered public records.

Title of Collection: EDFacts Collection of ESEA Flexibility Data.

OMB Control Number: 1875–NEW.

Type of Review: New.

Total Estimated Number of Annual Responses: 52.

Total Estimated Number of Annual Burden Hours: 1,248.

Abstract: On September 23, 2011, the U.S. Department of Education (ED) invited each State educational agency (SEA) to voluntarily request flexibility on behalf of itself, its local educational agencies, and schools, in order to better focus on improving student learning and increasing the quality of instruction. Since then, ED has approved 34 SEA requests for flexibility, and is currently reviewing several additional requests. ED expects to receive requests from additional SEAs by September 6, 2012. SEAs are invited to request flexibility pursuant to the authority in section 9401 of the Elementary and Secondary Education Act of 1965 (ESEA), which allows the Secretary of Education to waive, with certain exceptions, any statutory or regulatory requirement of the ESEA for an SEA that receives funds under a program authorized by the ESEA and requests a waiver. This clearance request is for the collection of data that may be needed to ensure that SEAs receiving ESEA flexibility are continuing to meet the intent and purpose of Title I of ESEA, including meeting the educational needs of low-achieving students, closing achievement gaps, and holding schools, local educational agencies, and SEAs accountable for improving the academic achievement of all students. This collection will be applicable to SEAs with approved flexibility plans. In order to reduce burden on SEAs and maximize the availability and utility of the data within ED, ED plans to require states to submit these data electronically through EDFacts, as allowable under 34 CFR part 76. ''Flexibility Clearance Attachment B'' outlines the 22 new data groups proposed for collection. ED is requesting SEAs to review the last page of Attachment B which provides two directed questions (see the link to EDICSweb to link number 04860 in the Addresses section above.) ED is requesting the data providers of each SEA respond to two specific questions about the proposed data groups. Responses to these questions will help ED determine whether or not to adjust the proposed data groups, as well as to determine which of the data can currently be provided by SEAs.

Dated: August 24, 2012.

Stephanie Valentine,

Acting Director, Information Collection Clearance Division, Privacy, Information and Records Management Services, Office of Management.

[FR Doc. 2012–21304 Filed 8–28–12; 8:45 am]

BILLING CODE 4000–01–P

DEPARTMENT OF EDUCATION

Notice of Submission for OMB Review; Office of Planning, Evaluation and Policy Development; Study of Strategies for Improving the Quality of Local Grantee Program Evaluation

SUMMARY: This study is intended to assist the Department in making decisions about how to structure future grant competitions; how to support evaluation and performance reporting activities among funded grantees, including technical assistance to improve the quality of evaluations and performance reporting; and how to make the best possible use of grantee evaluation findings.

DATES: Interested persons are invited to submit comments on or before September 28, 2012.

ADDRESSES: Written comments regarding burden and/or the collection activity requirements should be electronically mailed to *ICDocketMgr@ed.gov* or mailed to U.S. Department of Education, 400 Maryland Avenue SW., LBJ, Washington, DC 20202–4537. Copies of the proposed information collection request may be accessed from *http://edicsweb.ed.gov,* by selecting the ''Browse Pending Collections'' link and by clicking on link number 04869. When you access the information collection, click on ''Download Attachments'' to view. Written requests for information should be addressed to U.S. Department of Education, 400 Maryland Avenue SW., LBJ, Washington, DC 20202–4537. Requests may also be electronically mailed to *ICDocketMgr@ed.gov* or faxed to 202–401–0920. Please specify the complete title of the information collection and OMB Control Number when making your request.

Individuals who use a telecommunications device for the deaf (TDD) may call the Federal Information Relay Service (FIRS) at 1–800–877–8339.

SUPPLEMENTARY INFORMATION: Section 3506 of the Paperwork Reduction Act of 1995 (44 U.S.C. chapter 35) requires that Federal agencies provide interested parties an early opportunity to comment on information collection requests. The Director, Information Collection Clearance Division, Privacy, Information and Records Management Services, Office of Management, publishes this notice containing proposed information collection requests at the beginning of the Departmental review of the information collection. The Department of Education is especially interested in public comment addressing the following issues: (1) Is this collection necessary to the proper functions of the Department; (2) will this information be processed and used in a timely manner; (3) is the estimate of burden accurate; (4) how might the Department enhance the quality, utility, and clarity of the information to be collected; and (5) how might the Department minimize the burden of this collection on the respondents, including through the use of information technology. Please note that written comments received in response to this notice will be considered public records.

Title of Collection: Study of Strategies for Improving the Quality of Local Grantee Program Evaluation.

OMB Control Number: 1875–NEW.

Type of Review: New.

Total Estimated Number of Annual Responses: 20.

Total Estimated Number of Annual Burden Hours: 20.

Abstract: This study is intended to assist the Department in making decisions about how to structure future grant competitions; how to support evaluation and performance reporting activities among funded grantees, including technical assistance to improve the quality of evaluations and performance reporting; and how to make the best possible use of grantee evaluation findings.

Dated: August 24, 2012.

Stephanie Valentine,

Acting Director, Information Collection Clearance Division, Privacy, Information and Records Management Services, Office of Management.

[FR Doc. 2012–21308 Filed 8–28–12; 8:45 am]

BILLING CODE 4000–01–P

DEPARTMENT OF EDUCATION

Notice of Submission for OMB Review; Federal Student Aid; Electronic Debit Payment Option for Student Loans

SUMMARY: The Preauthorized Debit Account (PDA) Application is used to establish electronic debiting for individuals who have requested to have their defaulted federal education debt payments debited from their bank accounts.

DATES: Interested persons are invited to submit comments on or before September 28, 2012.

ADDRESSES: Written comments regarding burden and/or the collection activity requirements should be electronically mailed to *ICDocketMgr@ed.gov* or mailed to U.S. Department of Education, 400 Maryland Avenue SW., LBJ, Washington, DC 20202–4537. Copies of the proposed information collection request may be accessed from *http://edicsweb.ed.gov,* by selecting the ''Browse Pending Collections'' link and by clicking on link number 04879. When you access the information collection, click on ''Download Attachments'' to view. Written requests for information should be addressed to U.S. Department of Education, 400 Maryland Avenue SW., LBJ, Washington, DC 20202–4537. Requests may also be electronically mailed to *ICDocketMgr@ed.gov* or faxed to 202–401–0920. Please specify the complete title of the information collection and OMB Control Number when making your request.

Individuals who use a telecommunications device for the deaf (TDD) may call the Federal Information Relay Service (FIRS) at 1–800–877–8339.

SUPPLEMENTARY INFORMATION: Section 3506 of the Paperwork Reduction Act of 1995 (44 U.S.C. chapter 35) requires that Federal agencies provide interested parties an early opportunity to comment on information collection requests. The Director, Information Collection Clearance Division, Privacy, Information and Records Management Services, Office of Management, publishes this notice containing proposed information collection requests at the beginning of the Departmental review of the information collection. The Department of Education is especially interested in public comment addressing the following issues: (1) Is this collection necessary to the proper functions of the Department; (2) will this information be processed and used in a timely manner; (3) is the estimate of burden accurate; (4) how might the Department enhance the quality, utility, and clarity of the information to be collected; and (5) how might the Department minimize the burden of this collection on the respondents, including through the use of information technology. Please note that written comments received in response to this notice will be considered public records.

Title of Collection: Electronic Debit Payment Option for Student Loans.

OMB Control Number: 1845–0025.

Type of Review: Revision.

Total Estimated Number of Annual Responses: 1,600.

Total Estimated Number of Annual Burden Hours: 133.

Abstract: An Electronic Debit Account Program gives the borrower the option to repay federally funded student loans via automatic debit deductions from their checking or savings accounts. The PDA payment option allows individuals with defaulted federal education debts (student loans or grant overpayments) held by the U.S. Department of Education's (ED's) Federal Student Aid Default Resolution Group to have their payments automatically debited from their checking or savings accounts and sent to ED. Individuals who choose the use the PDA option to make their payments must authorize ED to debit their bank accounts. The PDA Brochure and Application (PDA Application) explains the PDA payment option and collects the applicant's authorization for electronic debiting of payments and the bank account information needed by ED to debit the applicant's account.

The authority for the PDA option is provided under the Deficit Reduction Act of 1984, Public Law 98–368, and 31 CFR part 202, Depositaries and Financial Agents of the Government. Operating rules and regulations approved and published by the National Automated Clearing House Association (NACHA) and 31 CFR part 210 also govern the use of the PDA Application. Finally, Regulation E, issued and maintained by the Board of Governors of the Federal Reserve System, implements Title IX of the Consumer Credit Protection Act, as amended in 15 U.S.C. 1601. This regulation is designed to implement the act, which primarily serves to protect the interests of the individual consumer participating in electronic transfers. ED has used the collection of information on the currently approved PDA Application to establish electronic debiting for individuals who have requested to have their defaulted federal education debt payments debited from their bank accounts.

Dated: August 24, 2012.

Stephanie Valentine,

Acting Director, Information Collection Clearance Division, Privacy, Information and Records Management Services, Office of Management.

[FR Doc. 2012–21306 Filed 8–28–12; 8:45 am]

BILLING CODE 4000–01–P

DEPARTMENT OF EDUCATION

Notice of Proposed Information Collection Requests; Institute of Education Sciences; Needs Sensing Survey Under the REL Program: Sample Survey Instrument for School Board Members and District Administrators

SUMMARY: The needs assessment consists of an online survey of a sample of school board members, district administrators, principals, and teachers in Illinois, Indiana, Iowa, Michigan, Minnesota, Ohio, and Wisconsin. The purpose of the sample survey is to assess: the importance these populations attach to the four issues identified in advance by REL Midwest as priorities for the region; for each issue, the types of data and analysis supports, and research and evaluation needs which respondents anticipate would be of particular value; and what factors would increase the likelihood respondents and the populations they represent would turn to the REL for data and analysis supports, or research and evaluation needs in the future. The results of the survey will be used to prioritize the assistance that REL Midwest provides to educators in the region for utilizing their longitudinal data systems, conducting high quality research and evaluation; learning about the best education research; and incorporating data into policy and practice.

DATES: Interested persons are invited to submit comments on or before October 29, 2012.

ADDRESSES: Written comments regarding burden and/or the collection activity requirements should be electronically mailed to *ICDocketMgr@ed.gov* or mailed to U.S. Department of Education, 400 Maryland Avenue SW., LBJ, Washington, DC 20202–4537. Copies of the proposed information collection request may be accessed from *http://edicsweb.ed.gov,* by selecting the ''Browse Pending Collections'' link and by clicking on link number 04922. When you access the information collection, click on ''Download Attachments'' to view. Written requests for information should be addressed to U.S. Department of Education, 400 Maryland Avenue SW., LBJ, Washington, DC 20202–4537. Requests may also be electronically mailed to *ICDocketMgr@ed.gov* or faxed to 202–401–0920. Please specify the complete title of the information collection and OMB Control Number when making your request.

Individuals who use a telecommunications device for the deaf (TDD) may call the Federal Information Relay Service (FIRS) at 1–800–877–8339.

SUPPLEMENTARY INFORMATION: Section 3506 of the Paperwork Reduction Act of 1995 (44 U.S.C. chapter 35) requires that Federal agencies provide interested parties an early opportunity to comment on information collection requests. The Director, Information Collection Clearance Division, Privacy, Information and Records Management Services, Office of Management, publishes this notice containing proposed information collection requests at the beginning of the Departmental review of the information collection. The Department of Education is especially interested in public comment addressing the following issues: (1) Is this collection necessary to the proper functions of the Department; (2) will this information be processed and used in a timely manner; (3) is the estimate of burden accurate; (4) how might the Department enhance the quality, utility, and clarity of the information to be collected; and (5) how might the Department minimize the burden of this collection on the respondents, including through the use of information technology. Please note that written comments received in response to this notice will be considered public records.

Title of Collection: Needs Sensing Survey under the REL program: (Sample survey Instrument for School Board Members and District Administrators.

OMB Control Number: 1850–NEW.

Type of Review: New.

Total Estimated Number of Annual Responses: 2,240.

Total Estimated Number of Annual Burden Hours: 983.

Abstract: The needs assessment consists of an online survey of a sample of school board members, district administrators, principals, and teachers in Illinois, Indiana, Iowa, Michigan, Minnesota, Ohio, and Wisconsin. The purpose of the sample survey is to assess: the importance these populations attach to the four issues identified in advance by REL Midwest as priorities for the region; for each issue, the types of data and analysis supports, and research and evaluation needs which respondents anticipate would be of particular value; and what factors would increase the likelihood respondents and the populations they represent would turn to the REL for data and analysis supports, or research and evaluation needs in the future. The results of the survey will be used to prioritize the assistance that REL Midwest provides to educators in the region for utilizing their longitudinal data systems, conducting high quality research and evaluation; learning about the best education research; and incorporating data into policy and practice.

Dated: August 24, 2012.

Stephanie Valentine,

Acting Director, Information Collection Clearance Division, Privacy, Information and Records Management Services, Office of Management.

[FR Doc. 2012–21309 Filed 8–28–12; 8:45 am]

BILLING CODE 4000–01–P

DEPARTMENT OF ENERGY

Western Area Power Administration

Notice of Cancellation of Environmental Impact Statement for the Proposed Interconnection of the Buffalo Ridge III Wind Project, Brookings and Deuel Counties, SD (DOE/EIS–0437)

AGENCY: Western Area Power Administration, DOE.

ACTION: Notice of Cancellation of Environmental Impact Statement.

SUMMARY: The U.S. Department of Energy (DOE), Western Area Power Administration (Western) is issuing this notice to advise the public that it is cancelling the preparation of an environmental impact statement (EIS) under the National Environmental Policy Act (NEPA) on an interconnection request by Heartland Wind, LLC (Heartland), a wholly owned subsidiary of Iberdrola Renewables, Inc.

DATES: This cancellation is effective on August 29, 2012.

FOR FURTHER INFORMATION CONTACT: For additional information on the cancellation of this EIS process, contact Matt Marsh, NEPA Document Manager, Upper Great Plains Regional Office, Western Area Power Administration, P.O. Box 35800, Billings, MT 59107–5800, email *MMarsh@wapa.gov,* telephone (406) 255–2811. For general information on DOE's NEPA review process, contact Carol M. Borgstrom, Director of NEPA Policy and Compliance, GC–54, Department of Energy, 1000 Independence Avenue SW., Washington, DC 20585–0119, telephone (202) 586–4600 or (800) 472–2756, facsimile (202) 586–7031.

SUPPLEMENTARY INFORMATION: Heartland proposed to design, construct, operate, and maintain a 170-megawatt Buffalo Ridge III Wind Project (Project) in Brookings and Deuel counties, South Dakota, and interconnect that Project with Western's transmission system. Heartland's interconnection request caused Western to initiate a NEPA review of its proposal to allow the interconnection. Western published a Notice of Intent for the EIS in the **Federal Register** on November 27, 2009 (74 FR 62298), and started the EIS process. A public scoping meeting was held subsequent to the Notice of Intent, but a Draft EIS was not produced because Heartland decided to suspend further action on its proposed Project. Heartland notified Western of its decision, and Western is now terminating the NEPA review process on its interconnection proposal and Heartland's proposed Project. Heartland could decide to reinitiate the proposed Project at some future date. In that event Western would issue a new Notice of Intent, and would start a new NEPA process.

The DOE's Acting General Counsel provided a ''Restatement of Delegations of Environmental Impact Statement Authorities'' to Western's Administrator in a November 16, 2011, memorandum. Under the authority granted by that memorandum, I have terminated the NEPA process for Heartland's proposed Buffalo Ridge III Wind Project with the publication of this notice.

Dated: August 17, 2012.

Anthony H. Montoya,

Acting Administrator.

[FR Doc. 2012–21302 Filed 8–28–12; 8:45 am]

BILLING CODE 6450–01–P

ENVIRONMENTAL PROTECTION AGENCY

[FRL–9723–6]

Access to Confidential Business Information by Enrollees Under the Senior Environmental Employment Program

AGENCY: Environmental Protection Agency (EPA).

ACTION: Notice.

SUMMARY: EPA has authorized grantee organizations under the Senior Environmental Employment (SEE) Program and their enrollees access to information which has been submitted to EPA under the environmental statutes administered by the Agency. Some of this information may be claimed or determined to be confidential business information (CBI).

DATES: Comments concerning CBI access will be accepted on or before September 4, 2012.

ADDRESSES: Comments should be submitted to: Susan Street, National Program Manager, Senior Environmental Employment Program (MC 3600M), U.S. Environmental Protection Agency, 1200 Pennsylvania Avenue NW., Washington, DC 20460.

FOR FURTHER INFORMATION CONTACT: Susan Street (202) 564–0410.

SUPPLEMENTARY INFORMATION: The Senior Environmental Employment (SEE) program is authorized by the Environmental Programs Assistance Act of 1984 (Pub. L. 98–313), which provides that the Administrator of the Environmental Protection Agency may ''make grants to, or enter into cooperative agreements with,'' specified private, nonprofit organizations for the purpose of ''providing technical assistance to Federal, State and local environmental agencies for projects of pollution prevention, abatement, and control.'' Cooperative agreements under the SEE Program provide support for many functions in the Agency, including clerical support, staffing hot lines, providing support to Agency enforcement activities, providing library services, compiling data, and providing support in scientific, engineering, financial and other areas.

In performing these tasks, grantees and cooperators under the SEE Program and their enrollees may have access to potentially all documents submitted under the Clean Air Act (CAA), the Clean Water Act (CWA), the Safe Drinking Water Act (SDWA), the Resource Conservation and Recovery Act (RCRA), the Federal Insecticide, Fungicide, and Rodenticide Act (FIFRA), the Emergency Planning Community Right-to-Know Act (EPCRA), the Federal Food, Drug, and Cosmetic Act (FFDCA) and the Comprehensive Environmental Response, Compensation, and Liability Act (CERCLA), to the extent that these statues allow disclosure of confidential information to ''authorized representatives of the United States'' or to ''contractors.'' Some of these documents may contain information claimed as confidential.

EPA provides confidential information to enrollees working under the following cooperative agreements:

Cooperative Agreement No.	Organization
National Association for Hispanic Elderly (NAHE)	
QS–833757	NAHE
Q–834244	NAHE
Q–834373	NAHE
Q–834621	NAHE
Q–834687	NAHE
QS–836112	NAHE
National Asian Pacific Center on Aging (NAPCA)	
QS–833692	NAPCA
Q–834156	NAPCA
Q–834311	NAPCA
Q–834312	NAPCA
Q–834313	NAPCA
Q–834314	NAPCA
Q–834315	NAPCA
Q–834372	NAPCA
Q–834607	NAPCA
Q–835153	NAPCA
Q–835159	NAPCA
Q–835160	NAPCA
Q–835185	NAPCA
Q–835231	NAPCA
National Caucus and Center on Black Aged, Inc. (NCBA)	
Q–832975	NCBA
Q–833567	NCBA
Q–833568	NCBA
Q–833570	NCBA
Q–833572	NCBA
Q–834211	NCBA
Q–834212	NCBA
Q–834374	NCBA
Q–834432	NCBA
Q–834433	NCBA
Q–834434	NCBA
Q–834569	NCBA
Q–834571	NCBA
Q–834680	NCBA
Q–835016	NCBA
Q–835017	NCBA
Q–835018	NCBA
Q–835020	NCBA
Q–835021	NCBA
Q–835052	NCBA
Q–835053	NCBA
Q–835154	NCBA
Q–835362	NCBA
Q–835363	NCBA
National Council on the Aging, Inc. (NCOA)	
QS–833832	NCOA
Q–834129	NCOA
Q–834130	NCOA
Q–834157	NCOA
Q–834266	NCOA
Q–834351	NCOA
Q–834773	NCOA
Q–835094	NCOA
Q–835207	NCOA
Q–835353	NCOA
National Older Worker Career Center, Inc. (NOWCC)	
Q–833890	NOWCC
Q–833982	NOWCC
Q–833983	NOWCC
Q–833987	NOWCC
Q–834011	NOWCC
Q–834038	NOWCC
Q–834039	NOWCC
Q–834095	NOWCC
Q–834096	NOWCC
Q–834112	NOWCC
Q–834119	NOWCC
Q–834122	NOWCC
Q–834124	NOWCC
Q–834355	NOWCC
Q–834375	NOWCC
Q–835004	NOWCC
Q–835005	NOWCC
Q–835006	NOWCC
Q–835007	NOWCC
Q–835026	NOWCC
Q–835027	NOWCC
Q–835028	NOWCC
Q–835029	NOWCC
Q–835030	NOWCC
Q–835045	NOWCC
Q–835046	NOWCC
Q–835047	NOWCC
Q–835101	NOWCC
Q–836111	NOWCC
Senior Service America, Inc. (SSAI)	
Q–833884	SSAI
Q–834162	SSAI
Q–834243	SSAI
Q–834245	SSAI
Q–834370	SSAI
Q–834570	SSAI
Q–834779	SSAI
Q–834888	SSAI
Q–834983	SSAI
Q–835049	SSAI
Q–835092	SSAI
Q–835100	SSAI
Q–835229	SSAI

Among the procedures established by EPA confidentiality regulations for granting access to confidential business information is notification to the submitters of CBI that SEE-grantee organizations and their enrollees will have access to this information. See 40 CFR 2.301(h)(2)(iii) for information

submitted under the CAA, 40 CFR 350.23 for EPCRA, and corresponding provisions of 40 CFR 2.302–2.311, for other statutes listed above. This document is intended to fulfill that requirement.

The grantee organizations are required by the cooperative agreements to protect confidential information. SEE enrollees are required to sign confidentiality agreements and to adhere to the same security procedures as Federal employees.

Dated: August 22, 2012.

Susan Street,

SEE Program Manager.

[FR Doc. 2012–21327 Filed 8–28–12; 8:45 am]

BILLING CODE 6560–50–P

ENVIRONMENTAL PROTECTION AGENCY

[FRL–9723–5]

McClellan Air Force Base Superfund Site Proposed Notice of Administrative Order on Consent

AGENCY: Environmental Protection Agency (EPA).

ACTION: Notice; request for public comment.

SUMMARY: Notice is hereby given that a proposed administrative order on consent concerning portions of the McClellan Air Force Base Superfund Site (''Site'') in McClellan, California has been negotiated by the Agency and the Respondent, McClellan Business Park, LLC, a Delaware limited liability company. The proposed administrative order on consent concerns cleanup of portions of the Site pursuant to the Comprehensive Environmental Response, Compensation and Liability Act, (''CERCLA''). Pursuant to a Federal Facilities Agreement (''FFA''), the U.S. Air Force is performing the CERCLA response actions for the Site; however, the FFA was amended to suspend the obligations of the Air Force to conduct the response actions undertaken by the Respondent. The Air Force has prepared a Finding of Suitability for Early Transfer (''FOSET''), which has been subject to a public comment period. The Air Force submitted the FOSET to the Environmental Protection Agency (''EPA''), Region 9, and the State of California for their approval and upon approval of the FOSET, the Air Force will transfer portions of the Site to the County of Sacramento, which will then transfer those portions to the Respondent. The Air Force and the County of Sacramento have entered into an Environmental Services Cooperative Agreement, which requires the County of Sacramento to perform certain CERCLA response actions on the transferred portions of the Site, using funds supplied by the Air Force. The County of Sacramento has contracted with Respondent to conduct those CERCLA response actions. The proposed administrative order on consent would require the Respondent to prepare and perform removal actions, one or more remedial investigations and feasibility studies and one or more remedial designs and remedial actions for certain contaminants present on the transferred portions of the Site, under the oversight of EPA and the State of California. The administrative order on consent also commits the Respondent to reimburse direct and indirect future response costs incurred by EPA in connection with actions conducted under CERCLA at the transferred portions of the Site.

For thirty (30) calendar days following the date of publication of this notice, EPA will receive written comments relating to the proposed administrative order on consent. If requested prior to the expiration of this public comment period, EPA will provide an opportunity for a public meeting in the affected area. EPA's response to any comments received will be available for public inspection at the U.S. Environmental Protection Agency, 75 Hawthorne Street, San Francisco, CA 94105.

DATES: Comments must be submitted on or before September 28, 2012.

Availability: The proposed administrative order on consent may be obtained from Barbara Maco, Project Manager telephone (415) 972–3794. Comments regarding the proposed administrative order on consent should be addressed to Thelma Estrada (ORC–3) at United States EPA Region IX, 75 Hawthorne Street, San Francisco, California 94105, and should reference ''FOSET #2 Privatization, McClellan Superfund Site,'' and ''Docket No. 2012–09''.

FOR FURTHER INFORMATION CONTACT: Thelma Estrada, Assistant Regional Counsel (ORC–3), Office of Regional Counsel, U.S. EPA Region IX, 75 Hawthorne Street, San Francisco, CA 94105; Email: *estrada.thelma@epa.gov;* phone: (415) 972–3866.

Dated: August 16, 2012.

Jane Diamond,

Director, Superfund Division, Region IX.

[FR Doc. 2012–21339 Filed 8–28–12; 8:45 am]

BILLING CODE 6560–50–P

ENVIRONMENTAL PROTECTION AGENCY

[EPA–HQ–SFUND–2005–0007; FRL–9522–2]

Agency Information Collection Activities; Submission to OMB for Review and Approval; Comment Request; EPA Worker Protection Standards for Hazardous Waste Operations and Emergency Response (Renewal)

AGENCY: Environmental Protection Agency (EPA).

ACTION: Notice.

SUMMARY: In compliance with the Paperwork Reduction Act (PRA) (44 U.S.C. 3501 et seq.), this document announces that an Information Collection Request (ICR) has been forwarded to the Office of Management and Budget (OMB) for review and approval. This is a request to renew an existing approved collection. The ICR, which is abstracted below, describes the nature of the information collection and its estimated burden and cost.

DATES: Additional comments may be submitted on or before September 28, 2012.

ADDRESSES: Submit your comments, referencing Docket ID No. EPA–HQ–SFUND–2005–0007, to (1) EPA online using *www.regulations.gov* (our preferred method), by email to *superfund.docket@epa.gov* or by mail to: EPA Docket Center, Environmental Protection Agency, Mail Code 28221T, 1200 Pennsylvania Ave. NW., Washington, DC 20460, and (2) OMB by mail to: Office of Information and Regulatory Affairs, Office of Management and Budget (OMB), Attention: Desk Officer for EPA, 725 17th Street NW., Washington, DC 20503.

FOR FURTHER INFORMATION CONTACT: Sella M. Burchette, U.S. Environmental Response Team, MS 101, Building 205, Edison, NJ 08837, telephone number: 721–321–6726; fax number: 732–321–6724; email address: *burchette.sella@epa.gov.*

SUPPLEMENTARY INFORMATION: EPA has submitted the following ICR to OMB for review and approval according to the procedures prescribed in 5 CFR 1320.12. On May 25, 2012 (77 FR 31352), EPA sought comments on this ICR pursuant to 5 CFR 1320.8(d). EPA received several comments that were not related to this ICR. Any additional comments on this ICR should be submitted to EPA and OMB within 30 days of this notice.

EPA has established a public docket for this ICR under Docket ID No. EPA–HQ–SFUND–2005–0007 which is

available for online viewing at *www.regulations.gov,* or in person viewing at the Superfund Docket in the EPA Docket Center (EPA/DC), EPA West, Room 3334, 1301 Constitution Ave. NW., Washington, DC. The EPA/DC Public Reading Room is open from 8:30 a.m. to 4:30 p.m., Monday through Friday, excluding legal holidays. The telephone number for the Reading Room is 202–566–1744, and the telephone number for the Superfund Docket is 202–566–0276.

Use EPA's electronic docket and comment system at *www.regulations.gov,* to submit or view public comments, access the index listing of the contents of the docket, and to access those documents in the docket that are available electronically. Once in the system, select ''docket search,'' then key in the docket ID number identified above. Please note that EPA's policy is that public comments, whether submitted electronically or in paper, will be made available for public viewing at *www.regulations.gov* as EPA receives them and without change, unless the comment contains copyrighted material, confidential business information (CBI), or other information whose public disclosure is restricted by statute. For further information about the electronic docket, go to *www.regulations.gov.*

Title: EPA Worker Protection Standards for Hazardous Waste Operations and Emergency Response (Renewal).

ICR Numbers: EPA ICR No. 1426.10, OMB Control No. 2050–0105.

ICR Status: This ICR is scheduled to expire on 08/31/12. Under OMB regulations, the Agency may continue to conduct or sponsor the collection of information while this submission is pending at OMB.'' An Agency may not conduct or sponsor, and a person is not required to respond to, a collection of information, unless it displays a currently valid OMB control number. The OMB control numbers for EPA's regulations in title 40 of the CFR, after appearing in the **Federal Register** when approved, are listed in 40 CFR part 9, are displayed either by publication in the **Federal Register** or by other appropriate means, such as on the related collection instrument or form, if applicable. The display of OMB control numbers in certain EPA regulations is consolidated in 40 CFR part 9.

Abstract: Section 126(f) of the Superfund Amendments and Reauthorization Act of 1986 (SARA) requires EPA to set worker protection standards for State and local employees engaged in hazardous waste operations and emergency response in the 27 States that do not have Occupational Safety and Health Administration approved State plans. The EPA coverage, required to be identical to the Occupational Safety and Health Administration (OSHA) standards, extends to three categories of employees: Those engaged in clean-ups at uncontrolled hazardous waste sites, including corrective actions at Treatment, Storage and Disposal (TSD) facilities regulated under the Resource Conservation and recovery Act (RCRA); employees working at routine hazardous waste operations at RCRA TSD facilities, and employees involved in emergency response operations without regard to location. This ICR renews existing mandatory record keeping collection of ongoing activities including monitoring of any potential employee exposure at uncontrolled hazardous waste sites, maintaining records of employee training, refresher training, medical exams and reviewing emergency response plans.

Burden Statement: The annual public reporting and recordkeeping burden for this collection is estimated to average 10.69 hours per response. Burden means the total time, effort, or financial resources expended by persons to generate, maintain, retain, disclose or provide information to or for a Federal agency. This includes the time needed to review instructions; develop, acquire, install, and utilize technology and systems for the purposes of collecting, validating, and verifying information, processing and maintaining information, and disclosing and providing information; adjust the existing ways to comply with any previously applicable instructions and requirements which have subsequently changed; train personnel to be able to respond to a collection of information; search data sources; complete and review the collection of information; and transmit or otherwise disclose the information.

Respondents/Affected Entities: State and local employees engaged in hazardous waste operations and emergency response in the 27 States that do not have OSHA approved State plans.

Estimated Number of Respondents: 23,900.

Frequency of Response: Annually.

Estimated Total Average Number of Responses for Each Respondent: 1.

Estimated Total Annual Hour Burden: 255,477 hours.

Estimated Total Annual Cost: $3,525,588, includes $0 annualized capital or O&M costs.

Changes in the Estimates: There is a decrease of 56,203 hours in the total estimated burden currently identified in the OMB Inventory of Approved ICR Burdens. This is due to an adjustment accounting for improved computer programs for recordkeeping.

John Moses,

Director, Collection Strategies Division.

[FR Doc. 2012–21267 Filed 8–28–12; 8:45 am]

BILLING CODE 6560–50–P

ENVIRONMENTAL PROTECTION AGENCY

[EPA–HQ–OAR–2004–0060; FRL 9521–7]

Agency Information Collection Activities; Submission to OMB for Review and Approval; Comment Request; Certification and Compliance Requirements for Nonroad Spark-Ignition Engines (Renewal)

AGENCY: Environmental Protection Agency (EPA).

ACTION: Notice.

SUMMARY: In compliance with the Paperwork Reduction Act (PRA) (44 U.S.C. 3501 et seq.), this document announces that an Information Collection Request (ICR) has been forwarded to the Office of Management and Budget (OMB) for review and approval. This is a request to renew an existing approved collection. The ICR, which is abstracted below, describes the nature of the information collection and its estimated burden and cost.

DATES: Additional comments may be submitted on or before September 28, 2012.

ADDRESSES: Submit your comments, referencing Docket ID No. EPA–HQ–OAR–2004–0060 to (1) EPA online using *www.regulations.gov* (our preferred method), by email to *a-and-r-docket@epa.gov,* or by mail to: EPA Docket Center, Environmental Protection Agency, Air and Radiation Docket (28221T), 1200 Pennsylvania Ave. NW., Washington, DC 20460, and (2) OMB by mail to: Office of Information and Regulatory Affairs, Office of Management and Budget (OMB), Attention: Desk Officer for EPA, 725 17th Street NW., Washington, DC 20503.

FOR FURTHER INFORMATION CONTACT: Nydia Yanira Reyes-Morales, Environmental Protection Agency, 1200 Pennsylvania Avenue, Mail Code 6403J NW., Washington, DC 20460; telephone number: 202–343–9264; fax number: 202–343–2804; email address: *reyes-morales.nydia@epa.gov*.

SUPPLEMENTARY INFORMATION: EPA has submitted the following ICR to OMB for review and approval according to the

procedures prescribed in 5 CFR 1320.12. On March 28, 2012 (77 FR 18802), EPA sought comments on this ICR pursuant to 5 CFR 1320.8(d). EPA received no comments during the comment period. Any additional comments on this ICR should be submitted to EPA and OMB within 30 days of this notice.

EPA has established a public docket for this ICR under Docket ID No. EPA–HQ–OAR–2004–0060, which is available for online viewing at *www.regulations.gov,* or in person viewing at the Air Docket in the EPA Docket Center (EPA/DC), EPA West, Room 3334, 1301 Constitution Ave. NW., Washington, DC. The EPA/DC Public Reading Room is open from 8:30 a.m. to 4:30 p.m., Monday through Friday, excluding legal holidays. The telephone number for the Reading Room is 202–566–1744, and the telephone number for the Air Docket is 202–566–1742.

Use EPA's electronic docket and comment system at *www.regulations.gov,* to submit or view public comments, access the index listing of the contents of the docket, and to access those documents in the docket that are available electronically. Once in the system, select ''docket search,'' then key in the docket ID number identified above. Please note that EPA's policy is that public comments, whether submitted electronically or in paper, will be made available for public viewing at *www.regulations.gov* as EPA receives them and without change, unless the comment contains copyrighted material, confidential business information (CBI), or other information whose public disclosure is restricted by statute. For further information about the electronic docket, go to *www.regulations.gov.*

Title: Certification and Compliance Requirements for Nonroad Spark-Ignition Engines (Renewal).

ICR Numbers: EPA ICR No. 1695.10, OMB Control No. 2060–0338.

ICR Status: This ICR is scheduled to expire on August 31, 2012. Under OMB regulations, the Agency may continue to conduct or sponsor the collection of information while this submission is pending at OMB. An Agency may not conduct or sponsor, and a person is not required to respond to, a collection of information, unless it displays a currently valid OMB control number. The OMB control numbers for EPA's regulations in title 40 of the CFR, after appearing in the **Federal Register** when approved, are listed in 40 CFR part 9, are displayed either by publication in the **Federal Register** or by other appropriate means, such as on the related collection instrument or form, if applicable. The display of OMB control numbers in certain EPA regulations is consolidated in 40 CFR part 9.

Abstract: This information collection is requested under the authority of Title II of the Clean Air Act (42 U.S.C. 7521 et seq.). Under this Title, EPA is charged with issuing certificates of conformity for those engines that comply with applicable emission standards. Such a certificate must be issued before engines may be legally introduced into commerce. To apply for a certificate of conformity, manufacturers are required to submit descriptions of their planned production line, including detailed descriptions of the emission control system, and test data. This information is organized by ''engine family'' groups expected to have similar emission characteristics. The emission values achieved during certification testing may also be used in the Averaging, Banking, and Trading (ABT) Program. The program allows manufacturers to bank credits for engine families that emit below the standard and use the credits for families that emit above the standard. They may also trade banked credits with other manufacturers. Participation in the ABT program is voluntary. Different categories of spark-ignition engines may also be required to comply with production-line testing and in-use testing. There are also recordkeeping and labeling requirements. For this renewal, former ICR 1722.06 (''Emission Certification and Compliance Requirements for Spark-Ignition Marine Engine, OMB Control Number 2060–0321) and former ICR 2251.03 (Control of Emissions from Nonroad Spark-Ignition Engines and Equipment, OMB Control Number 2060–0603) were incorporated into ICR 1695.10. This action was undertaken to consolidate certification and compliance information requirements for spark-ignition engines into one ICR for simplification. With this consolidation, we combine the entire certification and compliance burden associated with the spark-ignition engine industry. This information is collected electronically by the Gas Engine Compliance Center (GECC), Compliance Division, Office of Transportation and Air Quality (OTAQ), Office of Air and Radiation of the U.S. Environmental Protection Agency. GECC uses this information to ensure that manufacturers are in compliance with applicable regulations and the Clean Air Act (CAA). It may also be used by EPA's Office of Enforcement and Compliance Assurance (OECA) and the Department of Justice for enforcement purposes. Non-Confidential Business Information (CBI) may be disclosed on OTAQ's Web site or upon request under the Freedom of Information Act to trade associations, environmental groups, and the public.

Burden Statement: The annual public reporting and recordkeeping burden for this collection of information is estimated to average 83 hours per response. Burden means the total time, effort, or financial resources expended by persons to generate, maintain, retain, or disclose or provide information to or for a Federal agency. This includes the time needed to review instructions; develop, acquire, install, and utilize technology and systems for the purposes of collecting, validating, and verifying information, processing and maintaining information, and disclosing and providing information; adjust the existing ways to comply with any previously applicable instructions and requirements which have subsequently changed; train personnel to be able to respond to a collection of information; search data sources; complete and review the collection of information; and transmit or otherwise disclose the information.

Respondents/Affected Entities: Manufacturers of nonroad spark-ignition engines and marine spark-ignition engines.

Estimated Number of Respondents: 354.

Frequency of Response: Annual or on occasion.

Estimated Total Annual Hour Burden: 265,475 hours.

Estimated Total Annual Cost: $27,238,590, which includes $9,604,355 annualized capital or O&M costs.

Changes in the Estimates: There is a decrease of 98,711 hours in the total estimated burden currently identified in the OMB Inventory of Approved ICR Burdens. There is a decrease in burden from the previous ICR. This reduction is due primarily to the following reasons: (1) The fact that most applications for certification are now carry-overs, which require minimal time to prepare; and (2) the use of a web-based system where manufacturers can submit their responses, including applications for certification and reports under the other compliance programs included in this ICR.

John Moses,

Director, Collection Strategies Division.

[FR Doc. 2012–21268 Filed 8–28–12; 8:45 am]

BILLING CODE 6560–50–P

ENVIRONMENTAL PROTECTION AGENCY

[EPA–HQ–OPPT–2012–0613; FRL–9360–1]

Certain New Chemicals; Receipt and Status Information

AGENCY: Environmental Protection Agency (EPA).

ACTION: Notice.

SUMMARY: The Toxic Substances Control Act (TSCA) requires any person who intends to manufacture (defined by statute to include import) a new chemical (*i.e.,* a chemical not on the TSCA Chemical Substances Inventory (TSCA Inventory)) to notify EPA and comply with the statutory provisions pertaining to the manufacture of new chemicals. In addition under TSCA, EPA is required to publish in the **Federal Register** a notice of receipt of a premanufacture notice (PMN) or an application for a test marketing exemption (TME), and to publish in the **Federal Register** periodic status reports on the new chemicals under review and the receipt of notices of commencement (NOC) to manufacture those chemicals. This document, which covers the period from July 23, 2012 to August 03, 2012, and provides the required notice and status report, consists of the PMNs and TMEs, both pending or expired, and the NOC to manufacture a new chemical that the Agency has received under TSCA section 5 during this time period.

DATES: Comments identified by the specific PMN number or TME number, must be received on or before September 28, 2012.

ADDRESSES: Submit your comments, identified by docket identification (ID) number EPA–HQ–OPPT–2012–0613, and the specific PMN number or TME number for the chemical related to your comment, by one of the following methods:

- *Federal eRulemaking Portal: http://www.regulations.gov.* Follow the on-line instructions for submitting comments.
- *Mail:* Document Control Office (7407M), Office of Pollution Prevention and Toxics (OPPT), Environmental Protection Agency, 1200 Pennsylvania Ave. NW., Washington, DC 20460–0001.
- *Hand Delivery:* OPPT Document Control Office (DCO), EPA East Bldg., Rm. 6428, 1201 Constitution Ave. NW., Washington, DC. The DCO is open from 8 a.m. to 4 p.m., Monday through Friday, excluding legal holidays. The telephone number for the DCO is (202) 564–8930. Such deliveries are only accepted during the DCO's normal hours of operation, and special arrangements should be made for deliveries of boxed information.

Instructions: EPA's policy is that all comments received will be included in the docket without change and may be made available on-line at *http://www.regulations.gov,* including any personal information provided, unless the comment includes information claimed to be Confidential Business Information (CBI) or other information whose disclosure is restricted by statute. Do not submit information that you consider to be CBI or otherwise protected through regulations.gov or email. The regulations.gov Web site is an ''anonymous access'' system, which means EPA will not know your identity or contact information unless you provide it in the body of your comment. If you send an email comment directly to EPA without going through regulations.gov, your email address will be automatically captured and included as part of the comment that is placed in the docket and made available on the Internet. If you submit an electronic comment, EPA recommends that you include your name and other contact information in the body of your comment and with any disk or CD–ROM you submit. If EPA cannot read your comment due to technical difficulties and cannot contact you for clarification, EPA may not be able to consider your comment. Electronic files should avoid the use of special characters, any form of encryption, and be free of any defects or viruses.

Docket: All documents in the docket are listed in the docket index available at *http://www.regulations.gov.* Although listed in the index, some information is not publicly available, *e.g.,* CBI or other information whose disclosure is restricted by statute. Certain other material, such as copyrighted material, will be publicly available only in hard copy. Publicly available docket materials are available electronically at *http://www.regulations.gov,* or, if only available in hard copy, at the OPPT Docket. The OPPT Docket is located in the EPA Docket Center (EPA/DC) at Rm. 3334, EPA West Bldg., 1301 Constitution Ave. NW., Washington, DC. The EPA/DC Public Reading Room hours of operation are 8:30 a.m. to 4:30 p.m., Monday through Friday, excluding legal holidays. The telephone number of the EPA/DC Public Reading Room is (202) 566–1744, and the telephone number for the OPPT Docket is (202) 566–0280. Docket visitors are required to show photographic identification, pass through a metal detector, and sign the EPA visitor log. All visitor bags are processed through an X-ray machine and subject to search. Visitors will be provided an EPA/DC badge that must be visible at all times in the building and returned upon departure.

FOR FURTHER INFORMATION CONTACT:

For technical information contact: Bernice Mudd, Information Management Division (7407M), Office of Pollution Prevention and Toxics, Environmental Protection Agency, 1200 Pennsylvania Ave. NW., Washington, DC 20460–0001; telephone number: (202) 564–8951; fax number: (202) 564–8955; email address: *Mudd.Bernice@epa.gov.*

For general information contact: The TSCA-Hotline, ABVI-Goodwill, 422 South Clinton Ave., Rochester, NY 14620; telephone number: (202) 554–1404; email address: *TSCA-Hotline@epa.gov.*

SUPPLEMENTARY INFORMATION:

I. General Information

A. Does this action apply to me?

This action is directed to the public in general. As such, the Agency has not attempted to describe the specific entities that this action may apply to. Although others may be affected, this action applies directly to the submitter of the PMNs addressed in this action.

B. What should I consider as I prepare my comments for EPA?

1. *Submitting CBI.* Do not submit this information to EPA through regulations.gov or email. Clearly mark the part or all of the information that you claim to be CBI. For CBI information in a disk or CD–ROM that you mail to EPA, mark the outside of the disk or CD–ROM as CBI and then identify electronically within the disk or CD–ROM the specific information that is claimed as CBI. In addition to one complete version of the comment that includes information claimed as CBI, a copy of the comment that does not contain the information claimed as CBI must be submitted for inclusion in the public docket. Information so marked will not be disclosed except in accordance with procedures set forth in 40 CFR part 2.

2. *Tips for preparing your comments.* When submitting comments, remember to:

i. Identify the document by docket ID number and other identifying information (subject heading, **Federal Register** date and page number).

ii. Follow directions. The Agency may ask you to respond to specific questions or organize comments by referencing a Code of Federal Regulations (CFR) part or section number.

iii. Explain why you agree or disagree; suggest alternatives and substitute language for your requested changes.

iv. Describe any assumptions and provide any technical information and/or data that you used.

v. If you estimate potential costs or burdens, explain how you arrived at your estimate in sufficient detail to allow for it to be reproduced.

vi. Provide specific examples to illustrate your concerns and suggest alternatives.

vii. Explain your views as clearly as possible, avoiding the use of profanity or personal threats.

viii. Make sure to submit your comments by the comment period deadline identified.

II. Why is EPA taking this action?

EPA classifies a chemical substance as either an ''existing'' chemical or a ''new'' chemical. Any chemical substance that is not on EPA's TSCA Inventory is classified as a ''new chemical,'' while those that are on the TSCA Inventory are classified as an ''existing chemical.'' For more information about the TSCA Inventory go to: *http://www.epa.gov/opptintr/newchems/pubs/inventory.htm.* Anyone who plans to manufacture or import a new chemical substance for a non-exempt commercial purpose is required by TSCA section 5 to provide EPA with a PMN, before initiating the activity. Section 5(h)(1) of TSCA authorizes EPA to allow persons, upon application, to manufacture (includes import) or process a new chemical substance, or a chemical substance subject to a significant new use rule (SNUR) issued under TSCA section 5(a), for ''test marketing'' purposes, which is referred to as a test marketing exemption, or TME. For more information about the requirements applicable to a new chemical go to: *http://ww.epa.gov/opt/newchems.*

Under TSCA sections 5(d)(2) and 5(d)(3), EPA is required to publish in the **Federal Register** a notice of receipt of a PMN or an application for a TME and to publish in the **Federal Register** periodic status reports on the new chemicals under review and the receipt of NOCs to manufacture those chemicals. This status report, which covers the period from July 23, 2012 to August 03, 2012, consists of the PMNs pending or expired, and the NOCs to manufacture a new chemical that the Agency has received under TSCA section 5 during this time period.

III. Receipt and Status Reports

In Table I. of this unit, EPA provides the following information (to the extent that such information is not claimed as CBI) on the PMNs received by EPA during this period: The EPA case number assigned to the PMN, the date the PMN was received by EPA, the projected end date for EPA's review of the PMN, the submitting manufacturer/importer, the potential uses identified by the manufacturer/importer in the PMN, and the chemical identity.

TABLE I—17 PMNS RECEIVED FROM 07/23/12 TO 08/03/12

Case No.	Received date	Projected notice end date	Manufacturer/importer	Use	Chemical
P–12–0473	07/23/2012	10/20/2012	Takasago International Corporation U.S.A.	(S) Ingredient in a fragrance compound.	(S) Phenol 4-(ethoxymethyl)-2-methoxy-l.
P–12–0474	07/23/2012	10/20/2012	CBI	(S) Aliphatic multifunctional urethane acrylate for use in wood stains, primers and coatings.	(G) Ultra violet curable acrylate.
P–12–0475	07/24/2012	10/21/2012	Mane, U.S.A.	(S) Fragrance ingredient	(S) Butanoic acid, 2-methyl-5-(1-methylethyl) cyclopentyl ester.
P–12–0476	07/25/2012	10/22/2012	Infigreen Polymers	(S) Polyol for use in manufacturing of polyurethane foam.	(G) Aromatic polyester polyether polyol.
P–12–0477	07/27/2012	10/24/2012	International Specialty Products.	(S) Scale inhibitor	(S) Phosphonic acid, [[(2-hydroxyethyl)imino]bis(methylene)]bis-, monosodium salt (9ci) .
P–12–0478	07/27/2012	10/24/2012	CBI	(G) Coatings	(G) Amine salted polyurethane.
P–12–0480	07/30/2012	10/27/2012	CBI	(S) Monomer for specialty polymer.	(G) Alkyl maleimide substituted bicyclic olefin.
P–12–0481	07/30/2012	10/27/2012	CBI	(G) Polymer manufacture for electronic applications.	(G) Alkylated aromatic diamine.
P–12–0482	07/31/2012	10/28/2012	Honda of America Mfg., Inc.	(S) Fertilizer component to achieve desired zinc content.	(S) Flue dust, automotive metal recovery.
P–12–0483	08/01/2012	10/29/2012	CBI	(G) Coating additive	(G) Siloxanes and silicones, substituted alkyl group-terminated, ethoxylated, polymers with 5-isocyanato-1-(isocyanatomethyl)-, 1,3,3-trimethylcyclohexane and *N*-alkyl glycol, hydroxyethyl methacrylate-blocked.
P–12–0484	08/01/2012	10/29/2012	Bio100 Technologies, LLC.	(S) Polyol for polyurethane foam; polyol for polyurethane adhesives.	(G) Polyester polyol based upon glycerin.

TABLE I—17 PMNS RECEIVED FROM 07/23/12 TO 08/03/12—Continued

Case No.	Received date	Projected notice end date	Manufacturer/importer	Use	Chemical
P–12–0485	08/01/2012	10/29/2012	CBI	(G) Additive to polyurethane foam.	(G) Oxirane, alkyl, polymer with aromatic isocyanate, alkyloxirane polymer with oxirane ether with alkyltriol, and oxirane, polyethylene glycol mono(alkylaromatic) ether-blocked.
P–12–0486	08/01/2012	10/29/2012	CBI	(G) Additive to polyurethane foam.	(G) 2-alkylacohol, 1,1″,1‴,1⁗ -(-alkanediyldinitrilo) tetrakis-, polymer with aromatic isocyanate, alkyloxirane, alkyloxirane polymer with oxirane ether with aliphatic triol (3:1), and oxirane, polyalkylene glycol mono(branched alkylaromatic) ether-blocked.
P–12–0487	08/01/2012	10/29/2012	CBI	(G) Additive to polyurethane foam.	(G) Alkanol, oxybis-, polymer with aromatic, isocyanate-terminated, polymers with alkylene oxide, aromatic isocyanate, alkylene glycol ether with alkyltrioll (3:1), polyalkylene glycol and alkylene oxide, polyethylene glycol mono (alkylaromatic) ether.
P–12–0488	08/01/2012	10/29/2012	CBI	(G) Additive to polyurethane foam.	(G) Hydroxyl containing oil, polymer with aromatic isocyanate, polyalkylene-polyalkylene glycol ether with dialkylene glycol (2:1) and polyalkylene-polyalkylene glycol ether with aliphatic triol (3:1), polyalkylene glycol mono (branched alkylaromatic) ether-blocked.
P–12–0489	08/01/2012	10/29/2012	CBI	(G) Additive to polyurethane foam.	(G) Hydroxy containing oil, polymer with alkylene oxide, aromatic isocyanate, and polyalkylene-polyalkylene glycol ether with aliphatic triol (3:1), and alkylene oxide, polyalkylene glycol mono (branched alkylaromatic) ether-blocked.
P–12–0490	08/01/2012	10/29/2012	CBI	(G) Additive to polyurethane foam.	(G) Alkanol, oxybis-, polymer with aromatic isocyanate, isocyanate-terminated, polymers with 1,1′,1″,1‴-(1,2-alkyldinitrilo)tetrakis[2-alkanol], alkylene oxide, aromatic isocyanate, polyalkylenepolyalkylene glycol ether with aliphatic triol (3:1), polyalkylene glycol and alkylene oxide, polyalkylene glycol mono (branched alkylaromatic) ether-blocked.

In Table II. of this unit, EPA provides the following information (to the extent that such information is not claimed as CBI) on the NOCs received by EPA during this period: The EPA case number assigned to the NOC, the date the NOC was received by EPA, the projected end date for EPA's review of the NOC, and chemical identity.

TABLE II—12 NOCS RECEIVED FROM 07/23/12 TO 08/03/12

Case No.	Received date	Commencement notice end date	Chemical
P–07–0161	08/03/2012	07/18/2012	(G) Alkene substituted bis phenol.
P–11–0138	07/26/2012	07/16/2012	(G) Propylene oxide adduct of polyhydric alcohol.
P–11–0160	07/31/2012	07/14/2012	(G) Acrylated fatty acid glycerides.
P–11–0392	08/02/2012	07/25/2012	(G) Chlorofluoroalkene.

TABLE II—12 NOCS RECEIVED FROM 07/23/12 TO 08/03/12—Continued

Case No.	Received date	Commencement notice end date	Chemical
P–11–0609	07/24/2012	05/30/2012	(S) Propenoic acid, 3-[(2-hydroxy-1,1-dimethylethyl)amino]-2-methyl-.
P–11–0611	07/24/2012	05/30/2012	(S) Propenoic acid, 3-[[2-hydroxy -1-bism(hydroxymethyl) ethyl] amino]-2-methyl-.
P–12–0227	07/31/2012	07/28/2012	(G) Polycycloolefin polymer.
P–12–0229	07/24/2012	07/20/2012	(G) Subsituted aromatic diazo sulfonic acid salts.
P–12–0276	07/24/2012	07/20/2012	(G) Aromatic sulfonic acid azo dye salts.
P–12–0325	07/24/2012	07/23/2012	(G) Poly[oxy(methyl-1,2-ethanediyl)]-, ,alpha.-[3-substituted-1-oxo-2-alken-1-yl]-.omega.-hydroxy-, alkyl ethers.
P–12–0328	07/25/2012	07/24/2012	(G) MDI modified polyester with 1,2-ethanediol, iso-pr. alc-blocked.
P–96–0876	07/31/2012	07/09/2012	(S) Benzenesulfonamide, N,N-[methylenebis (4,1-phenyleneiminocarbonyl)] bis[4-methyl-.

If you are interested in information that is not included in these tables, you may contact EPA as described in Unit II. to access additional non-CBI information that may be available.

List of Subjects

Environmental protection, Chemicals, Hazardous substances, Imports, Notice of commencement, Premanufacturer, Reporting and recordkeeping requirements, Test marketing exemptions.

Dated: August 16, 2012.

Chandler Sirmons,

Acting Director, Information Management Division, Office of Pollution Prevention and Toxics.

[FR Doc. 2012–20877 Filed 8–28–12; 8:45 am]

BILLING CODE 6560–50–P

ENVIRONMENTAL PROTECTION AGENCY

[FRL–9714–9]

Clean Air Act Advisory Committee (CAAAC): Notice of Meeting

AGENCY: Environmental Protection Agency.

ACTION: Notice of meeting.

SUMMARY: The Environmental Protection Agency (EPA) established the Clean Air Act Advisory Committee (CAAAC) on November 19, 1990, to provide independent advice and counsel to EPA on policy issues associated with implementation of the Clean Air Act of 1990. The Committee advises on economic, environmental, technical, scientific, and enforcement policy issues.

Dates & Addresses: Open meeting notice: Pursuant to 5 U.S.C. App. 2 Section 10(a)(2), notice is hereby given that the Clean Air Act Advisory Committee will hold its next open meeting on September 20, 2012 from 8 a.m. to 3:45 p.m. at the Hilton Crystal City at Washington Reagan National Airport located at 2399 Jefferson Davis Highway, Arlington, VA 22202. Seating will be available on a first come, first served basis. The Permits, New Source Review and Toxics Subcommittee will meet at the same location on September 19, 2012 from 12:30 p.m. to 3:30 p.m. The agenda for the CAAAC full committee meeting on September 20, 2012 will be posted on the Clean Air Act Advisory Committee Web site at *http://www.epa.gov/oar/caaac/.*

Inspection of Committee Documents: The Committee agenda and any documents prepared for the meeting will be publicly available at the meeting. Thereafter, these documents, together with CAAAC meeting minutes, will be available by contacting the Office of Air and Radiation Docket and requesting information under docket EPA–HQ–OAR–2004–0075. The Docket office can be reached by email at: *a-and-r-Docket@epa.gov* or Fax: 202–566–9744.

FOR FURTHER INFORMATION CONTACT: Concerning the CAAAC, please contact Pat Childers, Office of Air and Radiation, U.S. EPA (202) 564–1082, Fax (202) 564–1352 or by mail at U.S. EPA, Office of Air and Radiation (Mail code 6102 A), 1200 Pennsylvania Avenue NW., Washington, DC 20004. For information on the Permits, New Source Review and Toxics subcommittee, please contact Liz Naess at (919) 541–1892. Additional Information on these meetings, CAAAC, and its Subcommittees can be found on the CAAAC Web site: *http://www.epa.gov/oar/caaac/.*

For information on access or services for individuals with disabilities, please contact Mr. Pat Childers at (202) 564–1082 or *childers.pat@epa.gov.* To request accommodation of a disability, please contact Mr. Childers, preferably at least 10 days prior to the meeting, to give EPA as much time as possible to process your request.

Dated: August 15, 2012.

Pat Childers,

Designated Federal Official, Clean Air Act Advisory Committee, Office of Air and Radiation.

[FR Doc. 2012–21340 Filed 8–28–12; 8:45 am]

BILLING CODE 6560–50–P

ENVIRONMENTAL PROTECTION AGENCY

[FRL–9722–8]

National Environmental Justice Advisory Council; Notification of Public Teleconference Meeting and Public Comment

AGENCY: Environmental Protection Agency (EPA).

ACTION: Notice of public teleconference meeting and public comment.

SUMMARY: Pursuant to the Federal Advisory Committee Act (FACA), Public Law 92–463, the U.S. Environmental Protection Agency (EPA) hereby provides notice that the National Environmental Justice Advisory Council (NEJAC) will host a public teleconference meeting on Friday, September 21, 2012, from 1 p.m. to 3 p.m. Eastern Time. The primary topic of discussion will be proposed recommendations about how the Agency should develop processes and policy for addressing tribal and indigenous peoples environmental justice issues and concerns. There will be a public comment period from 2:30 p.m. to 3 p.m. Eastern Time,. during which members of the public are encouraged to provide comments relevant to the topic of the meeting. Specifically, comments should respond to:

1. What activities and mechanisms should EPA conduct and develop to work collaboratively with indigenous

community-based/grassroots organizations to identify and address environmental justice concerns?

2. What organizational, regulatory, or policy hurdles exist that impede, complicate, or discourage tribal governments and indigenous organizations from effectively working together to address environmental and public health concerns.

3. What are the recommended means and mechanisms for EPA to coordinate and collaborate with other federal agencies to effectively provide environmental justice for indigenous people?

For additional information about registering to attend the meeting or to provide public comment, please see the ''Registration'' and **SUPPLEMENTARY INFORMATION** sections below. Due to a limited number of telephone lines, attendance will be on a first-come, first-served basis. Pre-registration is required. Registration for the teleconference meeting closes at 11 a.m. Eastern Time on Monday, September 17, 2012. The deadline to sign up for public comment, or to submit written public comments, is also Monday, September 17, 2012.

DATES: The NEJAC teleconference meeting on Friday, September 21, 2012, will begin promptly at 1 p.m. Eastern Time.

Registration: To register by email, send an email to *NEJACTelecon Sept2012@AlwaysPursuing Excellence.com* with ''Register for the NEJAC September 2012 Teleconference'' in the subject line. Please provide your name, organization, city and state, email address, and telephone number for follow-up. To register by phone or fax, send a fax (please print) or leave a voice message with your name, organization, city and state, email address, and telephone number at 877–773–1489. Please specify which meeting you are registering to attend (e.g., NEJAC September 2012 Teleconference). Please also state whether you would like to be put on the list to provide public comment, and whether you are submitting written comments before the Monday, September 17, 2012, deadline. Non-English speaking attendees wishing to arrange for a foreign language interpreter may also make appropriate arrangements using the email address or telephone/fax number.

FOR FURTHER INFORMATION CONTACT: Questions or correspondence concerning the teleconference meeting should be directed to Mr. Aaron Bell, U.S. Environmental Protection Agency, by mail at 1200 Pennsylvania Avenue NW. (MC2201A), Washington, DC 20460; by telephone at 202–564–1044; via email at *Bell.Aaron@epa.gov;* or by fax at 202–564–1624. Additional information about the NEJAC and upcoming meetings is available on the following Web site: *http://www.epa.gov/environmentaljustice/nejac.*

SUPPLEMENTARY INFORMATION: The Charter of the NEJAC states that the advisory committee shall provide independent advice to the Administrator on areas that may include, among other things, ''advice about broad, cross-cutting issues related to environmental justice, including environment-related strategic, scientific, technological, regulatory, and economic issues related to environmental justice.''

A. *Public Comment:* Members of the public who wish to attend the Friday, September 21, 2012, public teleconference or provide public comment must pre-register by 11 a.m. Eastern Time on Monday, September 17, 2012. Individuals or groups making remarks during the public comment period will be limited to five minutes. To accommodate the large number of people who want to address the NEJAC, only one representative of a particular community, organization, or group will be allowed to speak. Written comments also can be submitted for the record. The suggested format for individuals providing public comments is as follows: name of speaker; name of organization/community; city and state; and email address; brief description of the concern, and what you want the NEJAC to advise EPA to do. Written comments received by 11 a.m. Eastern Time on Monday, September 17, 2012, will be included in the materials distributed to the members of the NEJAC prior to the teleconference. Written comments received after that time will be provided to the NEJAC as time allows. All written comments should be sent to EPA's support contractor, APEX Direct, Inc., via email or fax as listed in the **FOR FURTHER INFORMATION CONTACT** section above.

B. *Information about Services for Individuals with Disabilities:* For information about access or services for individuals with disabilities, please contact Ms. Estela Rosas, EPA Contractor, APEX Direct, Inc., at 877–773–1489 or via email at *NEJACTelecon Sept2012@AlwaysPursuing Excellence.com.* To request special accommodations for a disability, please contact Ms. Rosas at least seven working days prior to the meeting, to give EPA sufficient time to process your request. All requests should be sent to the address, email, or phone/fax number listed in the ''Registration'' section above.

Dated: August 22, 2012.

Victoria Robinson,

Designated Federal Officer, National Environmental Justice Advisory Council.

[FR Doc. 2012–21343 Filed 8–28–12; 8:45 am]

BILLING CODE 6560–50–P

ENVIRONMENTAL PROTECTION AGENCY

[FRL–9723–7]

Proposed Administrative Settlement Agreement Under Section 122 of the Comprehensive Environmental Response, Compensation, and Liability Act for the Federal Creosote Superfund Site, Located in Manville, Somerset County, NJ

AGENCY: Environmental Protection Agency.

ACTION: Notice of proposed administrative settlement and opportunity for public comment.

SUMMARY: The United States Environmental Protection Agency (''EPA'') is proposing to enter into an administrative settlement agreement (''Settlement Agreement'') with Rustic Mall, LLC and Mr. Joseph Wilf (the ''Settling Parties'') pursuant to Section 122 of the Comprehensive Environmental Response, Compensation, and Liability Act (''CERCLA''), 42 U.S.C. 9622. The Settlement Agreement provides for Settling Parties' payment of certain response costs incurred at the Federal Creosote Superfund Site located within the Borough of Manville, Somerset County, New Jersey (''Site'').

In accordance with Section 122(i) of CERCLA, 42 U.S.C. 9622(i), this notice is being published to inform the public of the proposed Settlement Agreement and of the opportunity to comment. For thirty (30) days following the date of publication of this notice, EPA will receive written comments relating to the proposed Settlement Agreement. EPA will consider all comments received and may modify or withdraw its consent to the settlement if comments received disclose facts or considerations that indicate that the proposed settlement is inappropriate, improper or inadequate. EPA's response to any comments received will be available for public inspection at EPA Region 2, 290 Broadway, 17th floor, New York, New York 10007–1866.

DATES: Comments must be provided by September 28, 2012.

ADDRESSES: Comments should reference the Federal Creosote Superfund Site, EPA Docket No. CERCLA–02–2012–

2012 and should be sent to the U.S. Environmental Protection Agency, Office of Regional Counsel, New Jersey Superfund Branch, 290 Broadway—17th Floor, New York, NY 10007.

SUPPLEMENTARY INFORMATION: A copy of the proposed administrative settlement, as well as background information relating to the settlement, may be obtained from Elizabeth La Blanc, Assistant Regional Counsel, New Jersey Superfund Branch, Office of Regional Counsel, U.S. Environmental Protection Agency, 17th Floor, 290 Broadway, New York, New York 10007–1866. Telephone: 212–637–3106.

FOR FURTHER INFORMATION CONTACT: Elizabeth La Blanc, Assistant Regional Counsel, New Jersey Superfund Branch, Office of Regional Counsel, U.S. Environmental Protection Agency, 17th Floor, 290 Broadway, New York, New York 10007–1866. Telephone: 212–637–3106.

Dated: August 8, 2012.

Walter Mugdan,

Director, Emergency and Remedial Response Division.

[FR Doc. 2012–21351 Filed 8–28–12; 8:45 am]

BILLING CODE 6560–50–P

ENVIRONMENTAL PROTECTION AGENCY

[FRL–9722–1]

Request for Additional Nominations of Candidates for the EPA's Science Advisory Board (SAB), Chemical Assessment Advisory Committee

AGENCY: Environmental Protection Agency.

ACTION: Notice.

SUMMARY: The U.S. Environmental Protection Agency (EPA) invites public nominations of additional scientific experts to be considered for appointment to the EPA's Science Advisory Board (SAB) Chemical Assessment Advisory Committee (CAAC) to provide advice through the chartered SAB regarding Toxicological Reviews of environmental chemicals available on EPA's Integrated Risk Information System (IRIS).

DATES: Nominations should be submitted in time to arrive no later than September 19, 2012.

FOR FURTHER INFORMATION CONTACT: Nominators unable to submit nominations electronically as described below may submit a paper copy to the Designated Federal Officer for the committee, Mr. Aaron Yeow, DFO by email at *yeow.aaron@epa.gov* or contact him by telephone at 202–564–2050.

Background: The chartered SAB (the Board) was established in 1978 by the Environmental Research, Development and Demonstration Act (42 U.S.C. 4365) to provide independent advice to the Administrator on general scientific and technical matters underlying the Agency's policies and actions. Members of the SAB and its subcommittees constitute a distinguished body of non-EPA scientists, engineers, economists, and social scientists that are nationally and internationally-recognized experts in their respective fields from academia, industry, state, and tribal governments, research institutes, and non-governmental organizations. Members are appointed by the EPA Administrator for a period of three years. The SAB conducts business in accordance with the Federal Advisory Committee Act (FACA) (5 U.S.C. App. 2) and related regulations. Generally, SAB meetings are announced in the **Federal Register**, conducted in public view, and provide opportunities for public input during deliberations. All the work of the SAB subcommittees is performed under the direction of the Board. The chartered Board provides strategic advice to the EPA Administrator on a variety of EPA science and research programs and reviews and approves all SAB subcommittee and panel reports. Additional information about the SAB Federal Advisory Committees may be found on the SAB Web site at *http://www.epa.gov/sab.*

The U.S. EPA SAB Staff Office announced in a **Federal Register** Notice (Vol. 76, No. 223, pp. 71561–62) published on November 18, 2011, that it was forming a new committee under the auspices of the SAB to provide advice to EPA through the chartered SAB regarding the development of IRIS Toxicological Reviews. The SAB Staff Office sought public nominations of nationally and internationally recognized experts with knowledge in human health risk assessment and expertise in a range of disciplines including, but not limited to: public health; epidemiology; toxicology; modeling; biostatistics; and risk assessment. The SAB Staff Office invited public comments on the list of candidates being considered for appointment to the CAAC, which was announced in a **Federal Register** Notice (Vol. 77, No. 40, p. 12302) published on February 29, 2012. The list of candidates is available at: *http://yosemite.epa.gov/sab/sabproduct.nsf/WebBOARD/CAACListofCandidates/$File/bio%20list%20of%20candidatesw-memo022912.pdf.* The SAB Staff Office is seeking additional scientific experts to be considered for appointment to the CAAC.

Expertise Sought: The SAB Staff Office is seeking nominations of additional experts to serve on the SAB CAAC with expertise in health disparities to sensitive and susceptible populations. There is no need to resubmit nominations for individuals already on the list of candidates. For further information, please contact Mr. Aaron Yeow, DFO, by telephone at 202–564–2050 or by email at *yeow.aaron@epa.gov.*

Selection criteria include:

—Demonstrated scientific credentials and disciplinary expertise in their own fields;

—Willingness to commit time to the committee and demonstrated ability to work constructively and effectively on committees;

—Absence of financial conflicts of interest;

—Absence of an appearance of a lack of impartiality;

—Background and experiences that would contribute to the diversity of perspectives on the committee, e.g., geographic, economic, social, cultural, educational backgrounds, and professional affiliations; and

—For the committee as a whole, consideration of the collective breadth and depth of scientific expertise; and a balance of scientific perspectives.

How to Submit Nominations: Any interested person or organization may nominate qualified persons to be considered for appointment to this advisory committee. Individuals may self-nominate. Nominations should be submitted in electronic format (preferred) following the instructions for ''Nominating Experts to the Chemical Assessment Advisory Committee'' provided on the SAB Web site. The form can be accessed through the ''Nomination of Experts'' link on the blue navigational bar on the SAB Web site at *http://www.epa.gov/sab.* To be considered, all nominations should include the information requested. EPA values and welcomes diversity. In an effort to obtain nominations of diverse candidates, EPA encourages nominations of women and men of all racial and ethnic groups.

Nominators are asked to identify the specific committee for which nominees are to be considered. The following information should be provided on the nomination form: contact information about the person making the nomination; contact information about the nominee; the disciplinary and specific areas of expertise of the

nominee; the nominee's curriculum vita; and a biographical sketch of the nominee indicating current position, educational background; research activities; sources of research funding; and recent service on other national advisory committees or national professional organizations. Persons having questions about the nomination procedures, or who are unable to submit nominations through the SAB Web site, should contact the Designated Federal Officer for the committee, as identified above. Non-electronic submissions must follow the same format and contain the same information as the electronic form. The SAB Staff Office will acknowledge receipt of nominations and in that acknowledgement will invite the nominee to provide any additional information that the nominee feels would be useful in considering the nomination, such as availability to participate as a member of the committee; how the nominee's background, skills and experience would contribute to the diversity of the committee; and any concerns the nominee has regarding membership. The names and biosketches of qualified nominees identified by respondents to this **Federal Register** notice, and additional experts identified by the SAB Staff, will be posted in a List of Candidates on the SAB Web site at *http://www.epa.gov/sab.* Public comments on this List of Candidates will be accepted for 21 days. The public will be requested to provide relevant information or other documentation on nominees that the SAB Staff Office should consider in evaluating candidates.

Candidates invited to serve will be asked to submit the ''Confidential Financial Disclosure Form for Special Government Employees Serving on Federal Advisory Committees at the U.S. Environmental Protection Agency'' (EPA Form 3110–48). This confidential form allows EPA to determine whether there is a statutory conflict between that person's public responsibilities as a Special Government Employee and private interests and activities, or the appearance of a lack of impartiality, as defined by Federal regulation. The form may be viewed and downloaded through the ''Ethics Requirements for Advisors'' link on the blue navigational bar on the SAB Web site at *http://www.epa.gov/sab.*

Dated: August 21, 2012.

Thomas Brennan,

Deputy Director, EPA Science Advisory Board Staff Office.

[FR Doc. 2012–21337 Filed 8–28–12; 8:45 am]

BILLING CODE 6560–50–P

ENVIRONMENTAL PROTECTION AGENCY

[EPA–HQ–OPP–2012–0548; FRL–9357–3]

Notice of Receipt of Requests for Amendments To Delete Uses in Certain Pesticide Registrations

AGENCY: Environmental Protection Agency (EPA).

ACTION: Notice.

SUMMARY: In accordance with section 6(f)(1) of the Federal Insecticide, Fungicide, and Rodenticide Act (FIFRA), as amended, EPA is issuing a notice of receipt of request for amendments by registrants to delete uses in certain pesticide registrations. Section 6(f)(1) of FIFRA provides that a registrant of a pesticide product may at any time request that any of its pesticide registrations be amended to delete one or more uses. FIFRA further provides that, before acting on the request, EPA must publish a notice of receipt of any request in the **Federal Register**.

DATES: Unless the Agency receives a written withdrawal request on or before September 28, 2012, the deletions are effective September 28, 2012, because the registrants requested a waiver of the 180-day comment period. Users of these products who desire continued use on crops or sites being deleted should contact the applicable registrant on or before September 28, 2012.

ADDRESSES: Submit your comments, identified by docket identification (ID) number EPA–HQ–OPP–2012–0548 by one of the following methods:

- *Mail:* OPP Docket, Environmental Protection Agency Docket Center (EPA/DC), Mail Code: 28221T, 1200 Pennsylvania Ave. NW., Washington, DC 20460–0001.
- *Hand Delivery:* To make special arrangements for hand delivery or delivery of boxed information, please follow the instructions at *http://www.epa.gov/dockets/contacts.htm.*

Additional instructions on commenting or visiting the docket, along with more information about dockets generally, is available at *http://www.epa.gov/dockets.*

FOR FURTHER INFORMATION CONTACT: Christopher Green,, Office of Pesticide Programs, Environmental Protection Agency, 1200 Pennsylvania Ave. NW., Washington, DC 20460–0001; telephone number: (703) 347–0367; email address: *green.christopher@epa.gov.*

SUPPLEMENTARY INFORMATION:

I. General Information

A. Does this action apply to me?

This action is directed to the public in general. Although, this action may be of particular interest to persons who produce or use pesticides, the Agency has not attempted to describe all the specific entities that may be affected by this action. If you have any questions regarding the information in this notice, consult the person listed under **FOR FURTHER INFORMATION CONTACT**.

B. How can I get copies of this document and other related information?

The docket for this action, identified by docket identification (ID) number EPA–HQ–OPP–2012–0548, is available either electronically through *http://www.regulations.gov* or in hard copy at the OPP Docket in the Environmental Protection Agency Docket Center (EPA/DC), located in EPA West, Rm. 3334, 1301 Constitution Ave. NW., Washington, DC 20460–0001. The Public Reading Room is open from 8:30 a.m. to 4:30 p.m., Monday through Friday, excluding legal holidays. The telephone number for the Public Reading Room is (202) 566–1744, and the telephone number for the OPP Docket is (703) 305–5805. Please review the visitor instructions and additional information about the docket available at *http://www.epa.gov/dockets.*

II. What action is the Agency taking?

This notice announces receipt by the Agency of applications from registrants to delete uses in certain pesticide registrations. These registrations are listed in Table 1 of this unit by registration number, product name, active ingredient, and specific uses deleted. The requests listed in the following Table 1 have a 30-day comment period because the registrant requested a waiver of the 180-day comment period.

TABLE 1—REQUESTS FOR AMENDMENTS TO DELETE USES IN CERTAIN PESTICIDE REGISTRATIONS

EPA Registration No.	Product name	Active ingredient	Delete from label
228–652	Nufarm T-Methyl 4.5 F Fungicide	Thiophanate-methyl	Directions for Canola use.

TABLE 1—REQUESTS FOR AMENDMENTS TO DELETE USES IN CERTAIN PESTICIDE REGISTRATIONS—Continued

EPA Registration No.	Product name	Active ingredient	Delete from label
499–475	Pro-Control Pyrethrin 6EC	Pyrethrins and Piperonyl Butoxide	Use on Pre-Harvest Tree Nuts, Cereal Grains and Pasture Grasses.
2724–761	D-Limonene, Technical	Limonene	Outdoor uses.
42750–102	Tebuconazole 45 WP	Tebuconazole	Tree Nuts & Pome Fruit uses.
50534–7	Technical Chlorothalonil Fungicide	Chlorothalonil	Additive for aqueous paints, stains, coatings, adhesives, caulks, sealants, grouts, joint compounds, and wood preservative stains.
50534–229	Chlorothalonil FB	Chlorothalonil	Additive for aqueous paints, stains, coatings, adhesives, caulks, sealants, grouts, joint compounds, and wood preservative stains.

Users of these products who desire continued use on crops or sites being deleted should contact the applicable registrant before September 28, 2012 to discuss withdrawal of the application for amendment. This 30-day period will also permit interested members of the public to intercede with registrants prior to the Agency's approval of the deletion.

Table 2 of this unit includes the names and addresses of record for all registrants of the products listed in Table 1 of this unit, in sequence by EPA company number.

TABLE 2—REGISTRANTS REQUESTING AMENDMENTS TO DELETE USES IN CERTAIN PESTICIDE REGISTRATIONS

EPA Company No.	Company name and address
228	Nufarm Americas Inc., 4020 Aerial Center Pkwy, Ste. 101, Morrisville, NC 27560.
499	Whitmire Micro-Gen Research Laboratories, Inc., 3568 Tree Court Industrial Blvd., St. Louis, MO 63122.
2724	Wellmark International, 1501 E. Woodfield Rd., Suite 200 West, Schaumburg, IL 60173.
42750	Albaugh, Inc., 1525 NE 36th Street, Ankeny, IA 50021.
50534	GB Biosciences Corporation, P.O. Box 18300, Greensboro, NC 27419–8300.

III. What is the Agency's authority for taking this action?

Section 6(f)(1) of FIFRA provides that a registrant of a pesticide product may at any time request that any of its pesticide registrations be amended to delete one or more uses. FIFRA further provides that, before acting on the request, EPA must publish a notice of receipt of any such request in the **Federal Register**. Thereafter, the Administrator may approve such a request.

IV. Procedures for Withdrawal of Request

Registrants who choose to withdraw a request for use deletion must submit the withdrawal in writing to Christopher Green using the methods in **ADDRESSES**. The Agency will consider written withdrawal requests postmarked no later than September 28, 2012.

V. Provisions for Disposition of Existing Stocks

The Agency has authorized the registrants to sell or distribute product under the previously approved labeling for a period of 18 months after approval of the revision, unless other restrictions have been imposed, as in special review actions.

List of Subjects

Environmental protection, Pesticides and pests.

Dated: August 17, 2012.

Oscar Morales,

Director, Information Technology and Resources Management Division, Office of Pesticide Programs.

[FR Doc. 2012–21357 Filed 8–28–12; 8:45 am]

BILLING CODE 6560–50–P

FEDERAL COMMUNICATIONS COMMISSION

Federal Advisory Committee Act; Technological Advisory Council

AGENCY: Federal Communications Commission.

ACTION: Notice of public meeting.

SUMMARY: In accordance with the Federal Advisory Committee Act, this notice advises interested persons that the Federal Communications Commission's (FCC) Technological Advisory Council will hold a meeting on Monday, September 24, 2012 in the Commission Meeting Room, from 1 p.m. to 4 p.m. at the Federal Communications Commission, 445 12th Street SW., Washington, DC 20554.

DATES: September 24, 2012.

ADDRESSES: Federal Communications Commission, 445 12th Street SW., Washington, DC 20554.

FOR FURTHER INFORMATION CONTACT: Walter Johnston, Chief, Electromagnetic Compatibility Division, 202–418–0807; *Walter.Johnston@FCC.gov.*

SUPPLEMENTARY INFORMATION: The FCC Technological Advisory Council discussed progress and issues related to its 2012 work program at its last meeting on June 27, 2012. This meeting will discuss progress towards meeting the work objectives identified at the last meeting, specific recommendations resulting from ongoing work and any issues that have been uncovered by TAC members while undertaking this work. The FCC will attempt to accommodate as many people as possible. However, admittance will be limited to seating availability. Meetings are also broadcast live with open captioning over the Internet from the FCC Live Web page at *http://www.fcc.gov/live/.* The public may submit written comments before the meeting to: Walter Johnston, the FCC's Designated Federal Officer for Technological Advisory Council by email: *Walter.Johnston@fcc.gov* or U.S. Postal Service Mail (Walter Johnston, Federal Communications Commission,

Room 7–A224, 445 12th Street SW., Washington, DC 20554). Open captioning will be provided for this event. Other reasonable accommodations for people with disabilities are available upon request. Requests for such accommodations should be submitted via email to *fcc504@fcc.gov* or by calling the Office of Engineering and Technology at 202–418–2470 (voice), (202) 418–1944 (fax). Such requests should include a detailed description of the accommodation needed. In addition, please include your contact information. Please allow at least five days advance notice; last minute requests will be accepted, but may be impossible to fill.

Federal Communications Commission.

Bulah P. Wheeler,

Deputy Manager.

[FR Doc. 2012–21310 Filed 8–28–12; 8:45 am]

BILLING CODE P

DEPARTMENT OF HEALTH AND HUMAN SERVICES

International Workshop on Alternatives to the Murine Histamine Sensitization Test (HIST) for Acellular Pertussis Vaccines: State of the Science and the Path Forward

AGENCY: Division of the National Toxicology Program (DNTP), National Institute of Environmental Health Sciences (NIEHS), National Institutes of Health (NIH), HHS.

ACTION: Announcement of a workshop; call for abstract submissions.

SUMMARY: The NTP Interagency Center for the Evaluation of Alternative Toxicological Methods (NICEATM) announces an ''International Workshop on Alternatives to the Murine Histamine Sensitization Test (HIST) for Acellular Pertussis Vaccines: State of the Science and the Path Forward.'' This workshop, the third in a series of specialized vaccine workshops, will review new methods and approaches for acellular pertussis (aP) vaccine safety testing that incorporate innovations in science and technology. These scientific innovations should improve test accuracy, precision, and efficiency while also reducing or replacing the use of animals in vaccine safety testing. The goal is to address the path toward global validation, acceptance, and implementation of scientifically valid alternative methods for aP vaccines.

The workshop is open to the public at no charge with attendance limited only by the available space; however, advance registration is required (see **DATES**). NICEATM also invites submission of abstracts for scientific posters for display at the workshop (see **SUPPLEMENTARY INFORMATION**).

DATES: The workshop is scheduled for November 28–29, 2012. Sessions will begin each day at 8:00 a.m. and will end each day at approximately 5:45 p.m. The deadline for registration is November 16, 2012. The deadline for submission of poster abstracts is October 12, 2012.

ADDRESSES: The workshop will be held at the William H. Natcher Conference Center, 45 Center Drive, NIH Campus, Bethesda, MD 20892. Individuals with disabilities who need accommodation to participate in this event should contact Ms. Debbie McCarley at voice telephone: 919–541–2384 or email: *mccarley@niehs.nih.gov*. TTY users should contact the Federal TTY Relay Service at 800–877–8339. Requests should be made at least 5 business days in advance of the event.

FOR FURTHER INFORMATION CONTACT: Dr. William S. Stokes, Director, NICEATM, NIEHS, P.O. Box 12233, Mail Stop: K2–16, Research Triangle Park, NC, 27709, (telephone) 919–541–2384, (fax) 919–541–0947, (email) *niceatm@niehs.nih.gov*. Courier address: NICEATM, NIEHS, Room 2034, 530 Davis Drive, Morrisville, NC 27560.

SUPPLEMENTARY INFORMATION:

Background

Pertussis, also known as whooping cough, is a highly contagious disease caused by the bacterium *Bordetella pertussis*. Pertussis was one of the most common childhood diseases of the early 20th century and was once a major cause of childhood mortality in the United States. A whole-cell vaccine introduced in the 1940s reduced the incidence of pertussis by more than 80%. aP vaccines, which became available in the 1980s, were developed in response to public concern with some common side effects (e.g., fever, swelling at injection site) and rare serious events that coincided with the use of whole-cell pertussis vaccines. These new generation aP vaccines contain different combinations of the putative protective antigens of *B. pertussis* bacteria (e.g., inactivated pertussis toxin [PTx/d], pertactin, and fimbriae) and are less reactogenic than whole-cell vaccines.

Regulatory authorities require safety, potency, and purity testing prior to the release of each production lot of pertussis or pertussis antigen-containing vaccines. The murine histamine sensitization test (HIST) is a key safety test used to monitor residual levels of pertussis toxin (PTx) in vaccines. This test is performed to ensure that PTx has been effectively inactivated before release of vaccines (Corbel and Xing, 2004). However, such testing may involve large numbers of mice, some of which can experience significant unrelieved pain and distress. In addition, the HIST has technical challenges requiring frequent retesting, thereby increasing vaccine testing expense and animal usage. An international workshop organized in 2010 [1] by NICEATM, Interagency Coordinating Committee on the Validation of Alternative Methods (ICCVAM), and their international partners identified the HIST as a priority for future research, development, and validation of alternative test methods that could further reduce, refine (enhance animal well-being and lessen or avoid pain and distress), or replace animal use for aP vaccine safety testing (Stokes *et al.,* 2011).

Two international workshops reviewed currently available alternative *in vitro* assays to the HIST and discussed a path forward to achieve their validation and adoption [2] [3]. The Workshop on Animal-Free Detection of PTx in Vaccines—Alternatives to HIST was held on June 9 and 10, 2011, at the Paul Ehrlich Institute, Germany. An International Working Group for Alternatives to HIST (previously designated as the ''Spiked-vaccine Working Group'') was organized to coordinate future studies on relevant alternative methods (Bache *et al.,* 2012; Isbrucker, 2011).

The Alternative Safety Testing Strategies for Acellular Vaccines Workshop was held on August 21, 2011, as a satellite meeting to the 8th World Congress on Alternatives and Animal Use in the Life Sciences in Montreal, Canada (Isbrucker, 2011). Participants at this workshop further discussed and clarified regulatory agency requirements to achieve the acceptance of alternative methods to the HIST and agreed that conducting a study using spiked vaccines to compare the sensitivities of the HIST and *in vitro* assays would be important.

[1] International Workshop on Alternative Methods to Reduce, Refine, and Replace the Use of Animals in Vaccine Potency and Safety Testing: State of the Science and Future Directions, Bethesda, MD, USA September 14–16, 2010.

[2] Workshop on Animal-Free Detection of PTx in Vaccines—Alternatives to HIST, Langen, Germany, June 9–10, 2011.

[3] Alternative Safety Testing Strategies for Acellular Pertussis Vaccines (8th World Congress Satellite meeting), Montreal, Canada, August 21, 2011.

Several *in vitro* assays have been developed, or are currently under development, with the aim of finding an alternative method to the HIST for monitoring residual PTx activity in aP vaccines. The International Working Group for Alternatives to HIST is coordinating the acquisition and distribution of aP vaccine samples from manufacturers to research laboratories for generation of data using *in vitro* methods to evaluate vaccines spiked with a known amount of PTx. Data from the various alternative assays will be presented at the upcoming workshop and will form the basis for identifying *in vitro* methods for future assessment in the next international collaborative study.

The following methods will be evaluated and may be used to generate data to be presented at the upcoming workshop:

1. Binding assay: used to assess the amount of PTx/toxoid binding activity to the glycoprotein fetuin
2. Enzymatic assay: monitors the residual ADP-ribosylation of the PTx/toxoid
3. Cell-based assays: monitor the generation of cAMP or decrease in cellular ATP following exposure to PTx
4. Genetic assays: determine potential genomic markers of PTx activity

This workshop will provide a forum to discuss and review the *in vitro* protocols and available data from the International Working Group for Alternatives to HIST study and will suggest future collaborative projects using prepared materials. The workshop will also review additional new methods and approaches for aP vaccine safety testing that should improve test accuracy, precision, and efficiency while also reducing or replacing the use of animals in vaccine safety testing. Finally, the workshop will address the path toward global validation, acceptance, and implementation of scientifically valid alternative methods for aP vaccines.

Preliminary Workshop Agenda and Registration

Registration information, draft agenda, and additional meeting information are available on the NICEATM–ICCVAM Web site (*http://iccvam.niehs.nih.gov/meetings/HISTWksp-2012/HISTWksp.htm*) and upon request from NICEATM (see **FOR FURTHER INFORMATION CONTACT**).

Call for Abstract Submissions

NICEATM and ICCVAM invite the submission of abstracts for scientific posters to be displayed during this workshop. Guidelines for the submission of abstracts are available at *http://iccvam.niehs.nih.gov/meetings/HISTWksp-2012/HISTWksp-AbstractSubmit-508.pdf*. Abstracts must be submitted by email to *niceatm@niehs.nih.gov*. The deadline for abstract submission is October 12, 2012. The corresponding author will be notified regarding the abstract's acceptance within 21 working days of the submission deadline. Guidelines for poster presentations will be sent to the corresponding author with notification of acceptance.

Background Information on NICEATM and ICCVAM

ICCVAM is an interagency committee composed of representatives from 15 Federal regulatory and research agencies that require, use, generate, or disseminate toxicological and safety testing information. ICCVAM conducts technical evaluations of new, revised, and alternative safety testing methods and integrated testing strategies with regulatory applicability and promotes the scientific validation and regulatory acceptance of testing methods that more accurately assess the safety and hazards of chemicals and products and that reduce, refine, or replace animal use. The ICCVAM Authorization Act of 2000 (42 U.S.C. 285*l*−3) established ICCVAM as a permanent interagency committee of the NIEHS under NICEATM. NICEATM administers ICCVAM, provides scientific and operational support for ICCVAM-related activities, and conducts independent validation studies to assess the usefulness and limitations of new, revised, and alternative test methods and strategies. NICEATM and ICCVAM welcome the public nomination of new, revised, and alternative test methods and strategies applicable to the needs of U.S. Federal agencies. Additional information about ICCVAM and NICEATM can be found on the NICEATM–ICCVAM Web site (*http://iccvam.niehs.nih.gov*).

References

Bache C, Hoonakker M, Hendriksen C, Buchheit K–H, Spreitzer I, Montag T. 2012. Workshop on Animal Free Detection of Pertussis Toxin in Vaccines—Alternatives to the Histamine Sensitization Test. Biologicals 40: 309–311.

Corbel MJ, Xing DK–L. 2004. Toxicity and potency evaluation of pertussis vaccines. Exp Rev Vaccines 3: 89–101.

Isbrucker R. 2011. Alternative safety testing strategies for acellular pertussis vaccines. ALTEX Proceedings, 1/12, Proceedings of WC8; 77–80.

Stokes WS, Kulpa-Eddy J, McFarland RM. 2011. The International Workshop on Alternative Methods to Reduce, Refine and Replace the Use of Animals in Vaccine Potency and Safety Testing—Introduction and Summary. In: International Workshop on Alternative Methods to Reduce, Refine, and Replace the Use of Animals in Vaccine Potency and Safety Testing: State of the Science and Future Directions (Kulpa-Eddy J, McFarland R, Stokes WS, eds). Procedia Vaccinol 5: 1–15.

Dated: August 20, 2012.

John R. Bucher,

Associate Director, National Toxicology Program.

[FR Doc. 2012–21368 Filed 8–28–12; 8:45 am]

BILLING CODE 4140–01–P

DEPARTMENT OF HEALTH AND HUMAN SERVICES

Centers for Disease Control and Prevention

[30Day–12–12EK]

Agency Forms Undergoing Paperwork Reduction Act Review

The Centers for Disease Control and Prevention (CDC) publishes a list of information collection requests under review by the Office of Management and Budget (OMB) in compliance with the Paperwork Reduction Act (44 U.S.C. chapter 35). To request a copy of these requests, call the CDC Reports Clearance Officer at (404) 639–7570 or send an email to *omb@cdc.gov*. Send written comments to CDC Desk Officer, Office of Management and Budget, Washington, DC or by fax to (202) 395–5806. Written comments should be received within 30 days of this notice.

Proposed Project

Process and Intermediate Outcome Evaluation of ''Teenage Pregnancy Prevention: Integrating Services, Programs, and Strategies through Community-Wide Initiatives''—New—National Center for Chronic Disease Prevention and Health Promotion (NCCDPHP), Centers for Disease Control and Prevention (CDC).

Background and Brief Description

CDC is currently providing funding to nine state and community awardees, and five national organizations, to examine innovative, evidence-based teenage pregnancy prevention programs. Efforts are focused in communities with high rates of teen pregnancy in underserved African American and Latino youth. Components of these efforts include (1) implementing evidence-based or evidence-informed prevention programs; (2) linking teens to quality

health services; (3) educating stakeholders (parents, community leaders, and other constituents) about relevant evidence-based or evidence-informed strategies to reduce teen pregnancy; and (4) supporting the sustainability of the community-wide teen pregnancy prevention effort through capacity building and improved coordination of services.

CDC proposes to collect the information needed to conduct a process and intermediate outcome evaluation of these efforts. The information collection and evaluation plan will systematically document capacity building within funded communities and the extent to which communities implement multi-component, community-wide initiative activities. Respondents for the nine state and community awardees will include the project director/coordinator for each site, evaluators, and other program staff. In addition, to gain a variety of perspectives, information will be requested from multiple community and clinical partners associated with each state or community awardee (e.g., program implementers and core advisory group members). Information collected from these respondents will include needs assessments. Finally, CDC will collect information about the training and technical assistance needs of state and community awardees, and national organizations, which have been funded to support community-wide teen pregnancy prevention (TPP) activities.

The training and technical assistance reporting forms will be submitted to CDC electronically through an interactive web-based system. The remaining information collection forms will initially be fielded in hardcopy, but respondents may submit the completed forms to CDC via electronic mail. To allow flexibility based on awardee preferences, web-based reporting options may be implemented for all forms. Assessment and performance information will be reported to CDC annually. Training and technical assistance needs will be reported monthly so that CDC can provide immediate, targeted technical assistance as needed.

The assessment information, performance measures and training and technical assistance information to be collected are critical to understanding (1) the teen pregnancy prevention needs of each target community, (2) quality implementation practices associated with evidence-based programs and contraceptive access, and (3) the impact of implemented strategies.

OMB approval is requested for three years. There are no costs to respondents other than their time. The total estimated annualized burden hours are 1,150.

ESTIMATED ANNUALIZED BURDEN HOURS

Type of respondent	Form name	Number of respondents	Number of responses per respondent	Average burden per response (in hr)
State and Community Awardees.	State and Community Awardee Project Director/Project Coordinator Needs Assessment.	9	1	45/60
	State and Community Awardee Performance Measure Reporting Tool.	50	1	4
	State and Community Awardee Staff Needs Assessment	50	1	45/60
	State and Community Awardee Training and Technical Assistance Reporting Tool.	50	12	1
National Organization Awardees.	National Organization Awardee Training and Technical Assistance Reporting Tool.	15	12	1
Community and Clinical Partners.	Community and Clinical Partner Clinical Partner Needs Assessment.	50	1	1
	Community and Clinical Partner Program Implementation Partner Needs Assessment.	100	1	45/60

Dated: August 23,2012.

Ron A. Otten,

Director, Office of Scientific Integrity (OSI), Office of the Associate Director for Science, Office of the Directors, Centers for Disease Control and Prevention.

[FR Doc. 2012–21323 Filed 8–28–12; 8:45 am]

BILLING CODE 4163–18–P

DEPARTMENT OF HEALTH AND HUMAN SERVICES

Centers for Disease Control and Prevention

Advisory Board on Radiation and Worker Health (ABRWH or Advisory Board), National Institute for Occupational Safety and Health (NIOSH)

In accordance with section 10(a)(2) of the Federal Advisory Committee Act (Pub. L. 92–463), and pursuant to the requirements of 42 CFR 83.15(a), the Centers for Disease Control and Prevention (CDC), announces the following meeting of the aforementioned committee:

Times and Dates (All Times are Mountain Time)

8:15 a.m.–5:45 p.m., September 18, 2012.

8:15 a.m.–5:45 p.m., September 19, 2012.

8:15 a.m.–12:00 p.m., September 20, 2012.

Public Comment Times and Dates (All Times are Mountain Time)

6:00 p.m.–7:00 p.m.*, September 18, 2012.

6:00 p.m.–7:00 p.m.*, September 19, 2012.

*Please note that the public comment periods may end before the times indicated, following the last call for comments. Members of the public who wish to provide public comments should plan to attend public comment sessions at the start times listed.

Place: Denver Marriott Tech Center, 4900 South Syracuse Street, Denver, Colorado 80237; Telephone: 303–779–1100; Fax: 303–740–2523. Audio Conference Call via FTS Conferencing: The USA toll-free, dial-in number is 1–866–659–0537 with a pass code of 9933701.

Status: Open to the public, limited only by the space available. The meeting space accommodates approximately 150 people.

Background: The Advisory Board was established under the Energy Employees Occupational Illness Compensation Program Act of 2000 to advise the President on a variety of policy and technical functions required to

implement and effectively manage the new compensation program. Key functions of the Advisory Board include providing advice on the development of probability of causation guidelines which have been promulgated by the Department of Health and Human Services (HHS) as a final rule, advice on methods of dose reconstruction which have also been promulgated by HHS as a final rule, advice on the scientific validity and quality of dose estimation and reconstruction efforts being performed for purposes of the compensation program, and advice on petitions to add classes of workers to the Special Exposure Cohort (SEC).

In December 2000, the President delegated responsibility for funding, staffing, and operating the Advisory Board to HHS, which subsequently delegated this authority to the CDC. NIOSH implements this responsibility for CDC. The charter was issued on August 3, 2001, renewed at appropriate intervals, and will expire on August 3, 2013.

Purpose: This Advisory Board is charged with (a) providing advice to the Secretary, HHS, on the development of guidelines under Executive Order 13179; (b) providing advice to the Secretary, HHS, on the scientific validity and quality of dose reconstruction efforts performed for this program; and (c) upon request by the Secretary, HHS, advise the Secretary on whether there is a class of employees at any Department of Energy (DOE) facility who were exposed to radiation but for whom it is not feasible to estimate their radiation dose, and on whether there is reasonable likelihood that such radiation doses may have endangered the health of members of this class.

Matters to be Discussed: The agenda for the Advisory Board meeting includes: NIOSH Program Update; Department of Labor Program Update; DOE Program Update; SEC petitions for: Oak Ridge National Laboratory, Hanford (1987–1989; petition #155), Los Alamos National Laboratory, Rocky Flats Plant, General Steel Industries (Granite City, IL), Weldon Spring Plant (Weldon Spring, MO), Mound Plant, United Nuclear Corporation (Hematite, MO), Nuclear Metals Inc. (Concord, MA), and Pantex Plant; Baker-Perkins Company (Saginaw, MI) Technical Basis Document Review; SEC Petitions Status Update; and Board Work Sessions.

Agenda items are subject to change as priorities dictate.

In the event an individual cannot attend, written comments may be submitted in accordance with the redaction policy provided below. Any written comments received will be provided at the meeting and should be submitted to the contact person below well in advance of the meeting.

Policy on Redaction of Board Meeting Transcripts (Public Comment): (1) If a person making a comment gives his or her name, no attempt will be made to redact that name. (2) NIOSH will take reasonable steps to ensure that individuals making public comment are aware of the fact that their comments (including their name, if provided) will appear in a transcript of the meeting posted on a public Web site. Such reasonable steps include: (a) A statement read at the start of each public comment period stating that transcripts will be posted and names of speakers will not be redacted; (b) A printed copy of the statement mentioned in (a) above will be displayed on the table where individuals sign up to make public comments; (c) A statement such as outlined in (a) above will also appear with the agenda for a Board Meeting when it is posted on the NIOSH Web site; (d) A statement such as in (a) above will appear in the **Federal Register** Notice that announces Board and Subcommittee meetings. (3) If an individual in making a statement reveals personal information (e.g., medical information) about themselves that information will not usually be redacted. The NIOSH Freedom of Information Act (FOIA) coordinator will, however, review such revelations in accordance with FOIA and the Federal Advisory Committee Act (FACA) and if deemed appropriate, will redact such information. (4) All disclosures of information concerning third parties will be redacted. (5) If it comes to the attention of the Designated Federal Officer (DFO) that an individual wishes to share information with the Board but objects to doing so in a public forum, the DFO will work with that individual, in accordance with FACA, to find a way that the Board can hear such comments.

Contact Person for More Information: Theodore Katz, Executive Secretary, NIOSH, CDC, 1600 Clifton Road, Mailstop E–20, Atlanta, Georgia 30333; Telephone: (513) 533–6800, Toll Free: 1–800–CDC–INFO; email: *dcas@cdc.gov.*

The Director, Management Analysis and Services Office, has been delegated the authority to sign **Federal Register** Notices pertaining to announcements of meetings and other committee management activities, for both the Centers for Disease Control and Prevention and the Agency for Toxic Substances and Disease Registry.

Dated: August 23, 2012.

Catherine Ramadei,

Acting Director, Management Analysis and Services Office, Centers for Disease Control and Prevention.

[FR Doc. 2012–21333 Filed 8–28–12; 8:45 am]

BILLING CODE 4163–18–P

DEPARTMENT OF HEALTH AND HUMAN SERVICES

National Institutes of Health

National Institute of Mental Health Notice of Meeting

Pursuant to section 10(a) of the Federal Advisory Committee Act, as amended (5 U.S.C. App.), notice is hereby given of a meeting of the Interagency Autism Coordinating Committee (IACC) Subcommittee for Services Research and Policy.

The IACC Subcommittee for Services Research and Policy will be having a conference call on Wednesday, September 19, 2012. The Subcommittee will discuss plans for developing a 2012 IACC Strategic Plan Progress Update that will describe recent progress that has been made in the autism field as well as remaining gap areas in research. The meeting will be open to the public and accessible by webinar and conference call.

Name of Committee: Interagency Autism Coordinating Committee (IACC).

Type of meeting: Subcommittee for Services Research and Policy.

Date: September 19, 2012.

Time: 10:00 a.m. to 2:00 p.m. Eastern Time.

Agenda: The Subcommittee will discuss plans for developing a 2012 IACC Strategic Plan Progress Update that will describe recent progress that has been made in the autism field and identify remaining gap areas in research.

Webinar: https://www2.gotomeeting.com/register/427830826.

Conference Call: Dial: 800–369–3130, Access code: 1524980.

Cost: The conference call and webinar is free.

Contact Person: Ms. Lina Perez, Office of Autism Research Coordination, National Institute of Mental Health, NIH, 6001 Executive Boulevard, NSC, Room 6182A, Rockville, MD 20852, Phone: 301–443–6040, Email: *IACCPublicInquiries@mail.nih.gov.*

Please Note: The meeting will be accessible via a webinar and conference call. Members of the public who participate using the conference call phone number will be able to listen to the meeting but will not be heard. If you experience any technical problems with the conference call, please email *IACCTechSupport@acclaroresearch.com* or call the IACC Technical Support Help Line at 443–680–0098.

If you experience any technical problems with the Web presentation tool, please

contact GoToWebinar at (800) 263–6317. To access the Web presentation tool on the Internet the following computer capabilities are required: (A) Internet Explorer 5.0 or later, Netscape Navigator 6.0 or later or Mozilla Firefox 1.0 or later; (B) Windows® 2000, XP Home, XP Pro, 2003 Server or Vista; (C) Stable 56k, cable modem, ISDN, DSL or better Internet connection; (D) Minimum of Pentium 400 with 256 MB of RAM (Recommended); (E) Java Virtual Machine enabled (Recommended).

Individuals who participate by using this electronic service and who need special assistance such as captioning or other reasonable accommodations should submit a request to the Contact Person listed on this notice at least 5 days prior to the meeting.

Schedule is subject to change.

Information about the IACC and a registration link for this meeting are available on the Web site: *www.iacc.hhs.gov.*

Dated: August 23, 2012.

Carolyn A. Baum,

Program Analyst, Office of Federal Advisory Committee Policy.

[FR Doc. 2012–21249 Filed 8–28–12; 8:45 am]

BILLING CODE 4140–01–P

DEPARTMENT OF HEALTH AND HUMAN SERVICES

National Institutes of Health

National Institute on Alcohol Abuse and Alcoholism; Notice of Closed Meetings

Pursuant to section 10(d) of the Federal Advisory Committee Act, as amended (5 U.S.C. App.), notice is hereby given of the following meetings.

The meetings will be closed to the public in accordance with the provisions set forth in sections 552b(c)(4) and 552b(c)(6), Title 5 U.S.C., as amended. The grant applications and the discussions could disclose confidential trade secrets or commercial property such as patentable material, and personal information concerning individuals associated with the grant applications, the disclosure of which would constitute a clearly unwarranted invasion of personal privacy.

Name of Committee: National Institute on Alcohol Abuse and Alcoholism Initial Review Group Clinical, Treatment and Health Services Research Review Subcommittee.

Date: October 16, 2012.

Time: 8:00 a.m. to 6:00 p.m.

Agenda: To review and evaluate grant applications

Place: Hyatt Regency Bethesda, One Bethesda Metro Center, 7400 Wisconsin Avenue, Bethesda, MD 20814.

Contact Person: Katrina L Foster, Ph.D., Scientific Review Officer, National Institute on Alcohol Abuse & Alcoholism, National Institutes of Health, 5635 Fishers Lane, Rm. 2019, Rockville, MD 20852, 301–443–4032, *katrina@mail.nih.gov.*

Name of Committee: National Institute on Alcohol Abuse and Alcoholism Initial Review Group Epidemiology, Prevention and Behavior Research Review Subcommittee.

Date: October 24, 2012.

Time: 8:00 a.m. to 6:00 p.m.

Agenda: To review and evaluate grant applications.

Place: Hyatt Regency Bethesda, One Bethesda Metro Center, 7400 Wisconsin Avenue, Bethesda, MD 20814.

Contact Person: Katrina L Foster, Ph.D., Scientific Review Administrator, National Institutes on Alcohol Abuse & Alcoholism, National Institutes of Health, 5635 Fishers Lane, Rm. 3037, Rockville, MD 20852, 301–443–3037, *katrina@mail.nih.gov.*

(Catalogue of Federal Domestic Assistance Program No. 93.273, Alcohol Research Programs, National Institutes of Health, HHS)

Dated: August 22, 2012.

Jennifer S. Spaeth,

Director, Office of Federal Advisory Committee Policy.

[FR Doc. 2012–21370 Filed 8–28–12; 8:45 am]

BILLING CODE 4140–01–P

DEPARTMENT OF HEALTH AND HUMAN SERVICES

National Institutes of Health

National Institute of Neurological Disorders and Stroke; Notice of Closed Meeting

Pursuant to section 10(d) of the Federal Advisory Committee Act, as amended (5 U.S.C. App.), notice is hereby given of a meeting of the Board of Scientific Counselors, National Advisory Neurological Disorders and Stroke.

The meeting will be closed to the public as indicated below in accordance with the provisions set forth in sections 552b(c)(6), Title 5 U.S.C., as amended for the review, discussion, and evaluation of individual intramural programs and projects conducted by the National Institute of Neurological Disorders and Stroke, including consideration of personnel qualifications and performance, and the competence of individual investigators, the disclosure of which would constitute a clearly unwarranted invasion of personal privacy.

Name of Committee: Board of Scientific Counselors, National Institute of Neurological Disorders and Stroke.

Date: September 23–25, 2012.

Time: 7:00 p.m. to 11:30 a.m.

Agenda: To review and evaluate personal qualifications and performance, and competence of individual investigators.

Place: Residence Inn Bethesda, 7335 Wisconsin Avenue, Montgomery Room, Bethesda, MD 20814.

Contact Person: Alan P. Koretsky, Ph.D., Scientific Director, Division of Intramural Research, National Institute of Neurological Disorders and Stroke, NIH, 35 Convent Drive, Room 6A908, Bethesda, MD 20892, (301) 435–2232, *koretskya@ninds.nih.gov.*

(Catalogue of Federal Domestic Assistance Program Nos. 93.853, Clinical Research Related to Neurological Disorders; 93.854, Biological Basis Research in the Neurosciences, National Institutes of Health, HHS).

Dated: August 20, 2012.

Jennifer S. Spaeth,

Director, Office of Federal Advisory Committee Policy.

[FR Doc. 2012–21367 Filed 8–28–12; 8:45 am]

BILLING CODE 4140–01–P

DEPARTMENT OF HEALTH AND HUMAN SERVICES

National Institutes of Health

Eunice Kennedy Shriver National Institute of Child Health & Human Development Notice of Closed Meeting

Pursuant to section 10(d) of the Federal Advisory Committee Act, as amended (5 U.S.C. App.), notice is hereby given of the following meeting.

The meeting will be closed to the public in accordance with the provisions set forth in sections 552b(c)(4) and 552b(c)(6), Title 5 U.S.C., as amended. The contract proposals and the discussions could disclose confidential trade secrets or commercial property such as patentable material, and personal information concerning individuals associated with the contract proposals, the disclosure of which would constitute a clearly unwarranted invasion of personal privacy.

Name of Committee: National Institute of Child Health and Human Development Special Emphasis Panel; Contraceptive Clinical Trials Network (Male Studies) September.

Date: September 27, 2012.

Time: 2 p.m. to 4 p.m.

Agenda: To review and evaluate contract proposals.

Place: National Institutes of Health, 6100 Executive Boulevard, Rockville, MD 20852, (Telephone Conference Call).

Contact Person: Sathasiva B. Kandasamy, Ph.D., Scientific Review Officer, Division of Scientific Review, National Institute of Child Health and Human Development, 6100 Executive Boulevard, Rockville, MD 20892–9304, (301) 435–6680, *skandasa@mail.nih.gov.*

(Catalogue of Federal Domestic Assistance Program Nos. 93.864, Population Research; 93.865, Research for Mothers and Children; 93.929, Center for Medical Rehabilitation Research; 93.209, Contraception and Infertility Loan Repayment Program, National Institutes of Health, HHS)

Dated: August 23, 2012.

Michelle Trout,

Program Analyst, Office of Federal Advisory Committee Policy.

[FR Doc. 2012–21250 Filed 8–28–12; 8:45 am]

BILLING CODE 4140–01–P

DEPARTMENT OF HEALTH AND HUMAN SERVICES

National Institutes of Health

Eunice Kennedy Shriver National Institute of Child Health & Human Development (NICHD); Notice of Meeting

Pursuant to section 10(d) of the Federal Advisory Committee Act, as amended (5 U.S.C. App.), notice is hereby given of a meeting of the National Advisory Child Health and Human Development Council.

The meeting will be open to the public as indicated below, with attendance limited to space available. A portion of this meeting will be closed to the public in accordance with the provisions set forth in sections 552b(c)(4) and 552b(c)(6), Title 5 U.S.C., as amended for the review and discussion of grant applications. Individuals who plan to attend and need special assistance, such as sign language interpretation or other reasonable accommodations, should notify the contact person listed below in advance of the meeting.

Name of Committee: National Advisory Child Health and Human Development Council.

Date: September 24, 2012.

Open: September 24, 2012, 8:00 a.m. to 12:00 p.m.

Agenda: The agenda will include: 1) A report by the Director, NICHD; 2) and annual review of Division of Intramural Research; and other business of the Council.

Closed: September 24, 2012, 1:00 p.m. to Adjournment.

Agenda: To review and evaluate grant applications.

Place: National Institutes of Health Building 31, Center Drive, C-Wing, Conference Room 6, Bethesda, MD 20892.

Contact Person: Yvonne T. Maddox, Ph.D., Deputy Director, Eunice Kenney Shriver National Institute of Child Health and Human Development, NIH, 9000 Rockville Pike MSC 7510, Building 31, Room 2A03, Bethesda, MD 20892, (301) 496–1848.

Any interested person may file written comments with the committee by forwarding the statement to the contact person listed on this notice. The statement should include the name, address, telephone number, and when applicable, the business or professional affiliation of the interested person.

In the interest of security, NIH has instituted stringent procedures for entrance onto the NIH campus. All visitor vehicles, including taxis, hotel, and airport shuttles, will be inspected before being allowed on campus. Visitors will be asked to show one form of identification (for example, a government-issued photo ID, driver's license, or passport) and to state the purpose of their visit.

Information is also available on the Institute's home page: *http://www.nichd.nih.gov/about/overview/advisory/nachhd/,* where an agenda and any additional information for the meeting will be posted when available.

In order to facilitate public attendance at the open session of Council, additional seating will be available in the meeting overflow rooms, Conference Rooms 7 and 8. Individuals will also be able to view the meeting via NIH Videocast. Please go to the following link for Videocast access instructions at: *http://nichd.nih.gov/about/overview/advisory/nachhd/virtual-meeting.cfm.*

(Catalogue of Federal Domestic Assistance Program Nos. 93.864, Population Research; 93.865, Research for Mothers and Children; 93.929, Center for Medical Rehabilitation Research; 93.209, Contraception and Infertility Loan Repayment program, National Institutes of Health, HHS).

Dated: August 23, 2012.

Michelle Trout,

Program Analyst, Office of Federal Advisory Committee Policy.

[FR Doc. 2012–21251 Filed 8–28–12; 8:45 am]

BILLING CODE 4140–01–P

DEPARTMENT OF HEALTH AND HUMAN SERVICES

National Institutes of Health

National Institute of Allergy and Infectious Diseases; Notice of Closed Meetings

Pursuant to section 10(d) of the Federal Advisory Committee Act, as amended (5 U.S.C. App.), notice is hereby given of the following meetings.

The meetings will be closed to the public in accordance with the provisions set forth in sections 552b(c)(4) and 552b(c)(6), Title 5 U.S.C., as amended. The grant applications and the discussions could disclose confidential trade secrets or commercial property such as patentable material, and personal information concerning individuals associated with the grant applications, the disclosure of which would constitute a clearly unwarranted invasion of personal privacy.

Name of Committee: National Institute of Allergy and Infectious Diseases Special Emphasis Panel; Partnerships for Biodefense—Diagnostics 2.

Date: September 21, 2012.

Time: 11:00 a.m. to 5:00 p.m.

Agenda: To review and evaluate grant applications.

Place: National Institutes of Health, 6700B Rockledge Drive, Bethesda, MD 20817, (Telephone Conference Call).

Contact Person: Yong Gao, Ph.D., Scientific Review Officer, Scientific Review Program, DHHS/NIH/NIAID/DEA, 6700B Rockledge Drive, Room 3127, Bethesda, MD 20892, 301–443–8115, *gaol2@niaid.nih.gov.*

Name of Committee: National Institute of Allergy and Infectious Diseases Special Emphasis Panel; Partnerships for Biodefense—Immunotherapeutics.

Date: September 25, 2012.

Time: 11:00 a.m. to 5:00 p.m.

Agenda: To review and evaluate grant applications.

Place: National Institutes of Health, 6700B Rockledge Drive, Bethesda, MD 20817, (Telephone Conference Call).

Contact Person: Yong Gao, Ph.D., Scientific Review Officer, Scientific Review Program, DHHS/NIH/NIAID/DEA, 6700B Rockledge Drive, Room 3127, Bethesda, MD 20892, 301–443–8115, *gaol2@niaid.nih.gov.*

(Catalogue of Federal Domestic Assistance Program Nos. 93.855, Allergy, Immunology, and Transplantation Research; 93.856, Microbiology and Infectious Diseases Research, National Institutes of Health, HHS)

Dated: August 23, 2012.

Melanie J. Gray,

Program Analyst, Office of Federal Advisory Committee Policy.

[FR Doc. 2012–21252 Filed 8–28–12; 8:45 am]

BILLING CODE 4140–01–P

DEPARTMENT OF HEALTH AND HUMAN SERVICES

National Institutes of Health

Center for Scientific Review; Notice of Closed Meetings

Pursuant to section 10(d) of the Federal Advisory Committee Act, as amended (5 U.S.C. App.), notice is hereby given of the following meetings.

The meetings will be closed to the public in accordance with the provisions set forth in sections 552b(c)(4) and 552b(c)(6), Title 5 U.S.C., as amended. The grant applications and the discussions could disclose confidential trade secrets or commercial property such as patentable material, and personal information concerning individuals associated with the grant applications, the disclosure of which would constitute a clearly unwarranted invasion of personal privacy.

Name of Committee: Healthcare Delivery and Methodologies Integrated Review Group; Dissemination and Implementation Research in Health Study Section.

Date: September 24, 2012.

Time: 8:00 a.m. to 5:00 p.m.

Agenda: To review and evaluate grant applications.

Place: Hyatt Regency Bethesda, One Bethesda Metro Center, 7400 Wisconsin Avenue, Bethesda, MD 20814.

Contact Person: Jacinta Bronte-Tinkew, Ph.D., Scientific Review Officer, Center for Scientific Review, National Institutes of Health, 6701 Rockledge Drive, Room 3164, MSC 7770, Bethesda, MD 20892, (301) 806–0009, *brontetinkewjm@csr.nih.gov.*

Name of Committee: Center for Scientific Review Special Emphasis Panel; Member Conflict: #1 Bioengineering Sciences and Technologies.

Date: September 26, 2012.

Time: 2:00 p.m. to 4:00 p.m.

Agenda: To review and evaluate grant applications.

Place: National Institutes of Health, 6701 Rockledge Drive, Bethesda, MD 20892, (Telephone Conference Call).

Contact Person: Joseph Thomas Peterson, Ph.D., Scientific Review Officer, Center for Scientific Review, National Institutes of Health, 6701 Rockledge Drive, Room 4118, MSC 7814, Bethesda, MD 20892, 301–408–9694, *petersonjt@csr.nih.gov.*

Name of Committee: Genes, Genomes, and Genetics Integrated Review Group; Molecular Genetics B Study Section.

Date: September 27–28, 2012.

Time: 8:00 a.m. to 5:00 p.m.

Agenda: To review and evaluate grant applications.

Place: The Westin St. Francis, 335 Powell Street, San Francisco, CA 94102.

Contact Person: Richard A Currie, Ph.D., Scientific Review Officer, Center for Scientific Review, National Institutes of Health, 6701 Rockledge Drive, Room 5128, MSC 7840, Bethesda, MD 20892, (301) 435–1219, *currieri@csr.nih.gov.*

Name of Committee: Healthcare Delivery and Methodologies Integrated Review Group; Community-Level Health Promotion Study Section.

Date: September 27–28, 2012.

Time: 8:00 a.m. to 5:00 p.m.

Agenda: To review and evaluate grant applications.

Place: Hyatt Regency Bethesda, One Bethesda Metro Center, 7400 Wisconsin Avenue, Bethesda, MD 20814.

Contact Person: John H Newman, Ph.D., Scientific Review Officer, HDM IRG, Center for Scientific Review, National Institutes of Health, 6701 Rockledge Drive, Room 3158, MSC 7770, Bethesda, MD 20892, 301–267–9270, *newmanjh@mail.nih.gov.*

Name of Committee: Oncology 2—Translational Clinical Integrated Review Group; Developmental Therapeutics Study Section.

Date: October 1–2, 2012.

Time: 8:00 a.m. to 5:00 p.m.

Agenda: To review and evaluate grant applications.

Place: Melrose Hotel, 2430 Pennsylvania Avenue NW., Washington, DC 20037.

Contact Person: Sharon K Gubanich, Ph.D., Scientific Review Officer, Center for Scientific Review, National Institutes of Health, 6701 Rockledge Drive, Room 6214, MSC 7804, Bethesda, MD 20892, (301) 408–9512, *gubanics@csr.nih.gov.*

Name of Committee: Digestive, Kidney and Urological Systems Integrated Review Group; Clinical, Integrative and Molecular Gastroenterology Study Section.

Date: October 1, 2012.

Time: 8:00 a.m. to 6:00 p.m.

Agenda: To review and evaluate grant applications.

Place: Hyatt Regency Bethesda, One Bethesda Metro Center, 7400 Wisconsin Avenue, Bethesda, MD 20814.

Contact Person: Mushtaq A Khan, Ph.D., Scientific Review Officer, Center for Scientific Review, National Institutes of Health, 6701 Rockledge Drive, Room 2176, MSC 7818, Bethesda, MD 20892, 301–435–1778, *khanm@csr.nih.gov.*

Name of Committee: Integrative, Functional and Cognitive Neuroscience Integrated Review Group; Neurotoxicology and Alcohol Study Section.

Date: October 1, 2012.

Time: 8:00 a.m. to 7:00 p.m.

Agenda: To review and evaluate grant applications.

Place: Embassy Suites at the Chevy Chase Pavilion, 4300 Military Road NW., Washington, DC 20015.

Contact Person: Christine Melchior, Ph.D., Scientific Review Officer, Center for Scientific Review, National Institutes of Health, 6701 Rockledge Drive, Room 5176 MSC 7844, Bethesda, MD 20892, (301) 435–1713, *melchioc@csr.nih.gov.*

Name of Committee: Brain Disorders and Clinical Neuroscience Integrated Review Group; Clinical Neuroplasticity and Neurotransmitters Study Section.

Date: October 2–3, 2012.

Time: 8:00 a.m. to 5:00 p.m.

Agenda: To review and evaluate grant applications.

Place: Hilton Long Beach and Executive Center, 701 West Ocean Boulevard, Long Beach, CA 90831.

Contact Person: Suzan Nadi, Ph.D., Scientific Review Officer, Center for Scientific Review, National Institutes of Health, 6701 Rockledge Drive, Room 5217B, MSC 7846, Bethesda, MD 20892, 301–435–1259, *nadis@csr.nih.gov.*

Name of Committee: Cardiovascular and Respiratory Sciences Integrated Review Group; Lung Cellular, Molecular, and Immunobiology Study Section.

Date: October 2–3, 2012.

Time: 8:00 a.m. to 6:00 p.m.

Agenda: To review and evaluate grant applications.

Place: Avenue Hotel Chicago, 160 E. Huron Street, Chicago, IL 60611.

Contact Person: George M Barnas, Ph.D., Scientific Review Officer, Center for Scientific Review, National Institutes of Health, 6701 Rockledge Drive, Room 2180, MSC 7818, Bethesda, MD 20892, 301–435–0696, *barnasg@csr.nih.gov.*

Name of Committee: Risk, Prevention and Health Behavior Integrated Review Group; Psychosocial Risk and Disease Prevention Study Section.

Date: October 2–3, 2012.

Time: 8:00 a.m. to 6:00 p.m.

Agenda: To review and evaluate grant applications.

Place: Hyatt Regency Bethesda, One Bethesda Metro Center, 7400 Wisconsin Avenue, Bethesda, MD 20814.

Contact Person: Stacey FitzSimmons, Ph.D., Scientific Review Officer, Center for Scientific Review, National Institutes of Health, 6701 Rockledge Drive, Room 3114, MSC 7808, Bethesda, MD 20892, 301–451–9956, *fitzsimmonss@csr.nih.gov.*

(Catalogue of Federal Domestic Assistance Program Nos. 93.306, Comparative Medicine; 93.333, Clinical Research; 93.306, 93.333, 93.337, 93.393–93.396, 93.837–93.844, 93.846–93.878, 93.892, 93.893, National Institutes of Health, HHS)

Dated: August 23, 2012.

Carolyn A. Baum,

Program Analyst, Office of Federal Advisory Committee Policy.

[FR Doc. 2012–21253 Filed 8–28–12; 8:45 am]

BILLING CODE 4140–01–P

DEPARTMENT OF HEALTH AND HUMAN SERVICES

Office Of Refugee Resettlement

[CFDA Number 93.583]

Notice of the Award of a Single-Source Program Expansion Supplement Grant to Catholic Charities of Southern Nevada in Las Vegas, NV, a Wilson-Fish Project

AGENCY: Office of Refugee Resettlement, ACF, HHS.

ACTION: This announces the award of a single-source expansion supplement grant to Catholic Charities of Southern Nevada in Las Vegas, NV, by the Office of Refugee Resettlement, a program of the Administration for Children and Families.

SUMMARY: The Office of Refugee Resettlement (ORR) announces the award of a single-source program expansion supplement grant to Catholic Charities of Southern Nevada, Las Vegas, NV, in the amount of $437,650 under the Wilson-Fish Program. The supplemental award will allow the grantee to provide cash and medical assistance to arriving refugees and others who are also eligible for refugee benefits through the remainder of Federal Fiscal Year (FY) 2012. The expansion supplement award will enable the grantee to provide assistance to a higher number of clients than originally planned.

DATES: September 30, 2011 through September 29, 2012.

FOR FURTHER INFORMATION CONTACT: Carl Rubenstein, Wilson-Fish Coordinator, Office of Refugee Resettlement, Aerospace Building, 8th Floor West, 901 D Street SW., Washington, DC 20447. Telephone: 202–205–5933. Email: *carl.rubenstein@acf.hhs.gov.*

SUPPLEMENTARY INFORMATION: The Wilson-Fish program is intended to be an alternative to the traditional State

administered refugee assistance program for providing integrated assistance (cash and medical) and services (employment, case-management, ESL and other social services) to refugees, asylees, Amerasian Immigrants, Cuban and Haitian Entrants, Trafficking Victims and Iraqi/Afghani SIV's in order to increase their prospects for early employment and self-sufficiency, reduce their level of welfare dependence and promote coordination among voluntary resettlement agencies and service providers. In addition, the Wilson-Fish program enables ORR to ensure that refugee assistance programs exist in every State where refugees are resettled.

Statutory Authority: The Refugee Act of 1980 as amended, Wilson-Fish Amendment, Pub. L. 98–473, 8 U.S.C. 1522(e)(7); section 412(e) (7) (A) of the Immigration and Nationality Act.

Eskinder Negash,

Director, Office of Refugee Resettlement.

[FR Doc. 2012–21295 Filed 8–28–12; 8:45 am]

BILLING CODE 4184–46–P

DEPARTMENT OF THE INTERIOR

Office of the Secretary

Meeting of the Secretarial Commission on Indian Trust Administration and Reform

AGENCY: Office of the Secretary, Interior.

ACTION: Notice of meeting.

SUMMARY: The Secretarial Commission on Indian Trust Administration and Reform (the Commission) will hold a public meeting on September 13 and 14, 2012. The Commission will also host a public facilitated discussion the afternoon of September 12, 2012, on the Fort Berthold Reservation, and a youth outreach session the evening of September 13, 2012, at the United Tribes Technical College.

DATES: The Commission's public meeting will begin at 8 a.m. and end at 5 p.m. on September 13 and 14, 2012. Members of the public who wish to attend should respond by September 7, 2012, to: *trustcommission@ios.doi.gov* to ensure adequate meeting packets will be made available. The Commission's public facilitated discussion will be held in the afternoon (time to be determined) on September 12, 2012, and the youth outreach session will be held from 7 p.m. to 9 p.m. on September 13, 2012; additional information will be available at: *http://www.doi.gov/cobell/commission/index.cfm.*

ADDRESSES: The public meeting will be held at the Best Western Ramkota Hotel Bismarck, 800 South Third Street, Bismarck, North Dakota 58504. We encourage you to respond to *trustcommission@ios.doi.gov* by September 7, 2012. The public facilitated session will be held on the Fort Berthold Indian Reservation and the youth outreach session will be held at the United Tribes Technical College; further information on these locations will be available at *http://www.doi.gov/cobell/commission/index.cfm.*

FOR FURTHER INFORMATION CONTACT: The Designated Federal Official, Lizzie Marsters, Chief of Staff to the Deputy Secretary, Department of the Interior, 1849 C Street NW., Room 6118, Washington, DC 20240; or email to *Lizzie_Marsters@ios.doi.gov.*

SUPPLEMENTARY INFORMATION:

Background

The Secretarial Commission on Indian Trust Administration and Reform was established under Secretarial Order No. 3292, dated December 8, 2009. The Commission plays a key role in the Department's ongoing efforts to empower Indian nations and strengthen nation-to-nation relationships.

The Commission will complete a comprehensive evaluation of the Department's management and administration of the trust assets within a two-year period and offer recommendations to the Secretary of the Interior on how to improve in the future. The Commission will:

(1) Conduct a comprehensive evaluation of the Department's management and administration of the trust administration system;

(2) Review the Department's provision of services to trust beneficiaries;

(3) Review input from the public, interested parties, and trust beneficiaries involving a number of regional listening sessions;

(4) Consider the nature and scope of necessary audits of the Department's trust administration system;

(5) Recommend options to the Secretary to improve the Department's management and administration of the trust administration system based on information obtained from the Commission's activities, including whether any legislative or regulatory changes are necessary to permanently implement the recommended improvements; and

(6) Consider the provisions of the American Indian Trust Fund Management Reform Act of 1994 providing for termination of the Office of the Special Trustee for American Indians, and make recommendations to the Secretary regarding termination.

Meeting Details

On Wednesday, September 12, 2012, in the afternoon, the Commission will host a public facilitated discussion to offer opportunities for members of the public to share their concerns about trust management and administration.

On the evening of Thursday, September 13, 2012, the Commission will host a youth outreach session beginning at 7 p.m. to 9 p.m. at the United Tribes Technical College. For additional information please refer to *http://www.doi.gov/cobell/commission/index.cfm.*

On Thursday, September 13, 2012, and Friday, September 14, 2012, the Commission will hold a public meeting. The following items will be on the agenda for the public meeting.

Thursday, September 13, 2012

- Invocation;
- Welcome, introductions, agenda review;
- Commission operations reports and decision-making;
- Commission review and discussion of preliminary recommendations;
- Initial observations and comments from public regarding Commission recommendations;
- Summary of comments as of August 31, 2012, from Commission outreach letter and survey to DOI employees;
- Panel session regarding hard assets;
- Commissioner reflections and insights from the day; and
- Review of action items from today's discussion.

Friday, September 14, 2012

- Invocation;
- Welcome, introductions, agenda review;
- Reflections from Thursday's deliberations;
- Trust reform and trust models panel session;
- Public comment regarding Commission recommendations and discussions;
- Commission working session to continue development of preliminary recommendations;
- Status update on settlement (proposed);
- Commission discussion of insights and conclusions from morning and afternoon deliberations;
- Planning for next meetings;
- Review action items, meeting accomplishments; and
- Closing blessing, adjourn.

Written comments may be sent to the Designated Federal Official listed in the **FOR FURTHER INFORMATION CONTACT** section above. To review all materials

related to the Commission's work, please refer to *http://www.doi.gov/cobell/commission/index.cfm.* All meetings are open to the public.

Dated: August 23, 2012.

David J. Hayes,

Deputy Secretary.

[FR Doc. 2012–21248 Filed 8–28–12; 8:45 am]

BILLING CODE 4310–W7–P

DEPARTMENT OF THE INTERIOR

Bureau of Safety and Environmental Enforcement

[Docket ID No. BSEE–2012–0001; OMB Number 1014–NEW]

Information Collection Activity: Subpart C, Pollution Prevention and Control; Submitted for Office of Management and Budget (OMB) Review; Comment Request

ACTION: 30-day Notice.

SUMMARY: To comply with the Paperwork Reduction Act of 1995 (PRA), we are notifying the public that we have submitted to OMB an information collection request (ICR) to renew approval of the paperwork requirements in the regulations under Subpart C, Pollution Prevention and Control. This notice also provides the public a second opportunity to comment on the paperwork burden of these regulatory requirements.

DATE: Submit written comments by September 28, 2012.

ADDRESSES: Submit comments by either fax (202) 395–5806 or email (*OIRA_DOCKET@omb.eop.gov*) directly to the Office of Information and Regulatory Affairs, OMB, Attention: Desk Officer for the Department of the Interior (1014–NEW). Please also provide a copy of your comments to BSEE by any of the means below.

- *Electronically:* go to *http://www.regulations.gov.* In the entry titled, ''Enter Keyword or ID,'' enter BSEE–2012–0001 then click search. Follow the instructions to submit public comments and view all related materials. We will post all comments.
- Email *cheryl.blundon@bsee.gov*, fax (703) 787–1546, or mail or hand-carry comments to: Department of the Interior; Bureau of Safety and Environmental Enforcement; Regulations Development Branch; Attention: Cheryl Blundon; 381 Elden Street, HE3313; Herndon, Virginia 20170–4817. Please reference 1014–NEW, subpart C, in your comment and include your name and return address.

FOR FURTHER INFORMATION CONTACT: Cheryl Blundon, Regulations Development Branch, (703) 787–1607. To see a copy of the entire ICR submitted to OMB, go to *http://www.reginfo.gov* (select Information Collection Review, Currently Under Review). You may also contact Cheryl Blundon to obtain a copy, at no cost, of the regulation that requires the subject collection of information.

SUPPLEMENTARY INFORMATION:

Title: 30 CFR 250, Subpart C, Pollution Prevention and Control.

OMB Control Number: 1014–NEW.

Abstract: The Outer Continental Shelf (OCS) Lands Act, as amended (43 U.S.C. 1331 *et seq.* and 43 U.S.C. 1801 *et seq.*), authorizes the Secretary of the Interior to prescribe rules and regulations to administer leasing of mineral resources on the OCS. Such rules and regulations will apply to all operations conducted under a lease, right-of-way, or a right-of-use and easement.

Section 1332(6) states that ''operations in the [O]uter Continental Shelf should be conducted in a safe manner by well-trained personnel using technology, precautions, and techniques sufficient to prevent or minimize the likelihood of blowouts, loss of well control, fires, spillages, physical obstruction to other users of the waters or subsoil and seabed, or other occurrences which may cause damage to the environment or to property, or endanger life or health.'' Section 1843(b) calls for ''regulations requiring all materials, equipment, tools, containers, and all other items used on the Outer Continental Shelf to be properly color coded, stamped, or labeled, wherever practicable, with the owner's identification prior to actual use.''

This collection also incorporates an IC requirement pertaining to Marine Trash and Debris (§ 250.300) that was inadvertently submitted under BOEM. Once OMB approves this ICR, the duplicative hour burden will be removed from the respective BOEM collection.

It needs to be stated that between the 60-day Federal Notice for this collection and now, the Bureau of Ocean Energy Management and Regulatory Enforcement split into two separate agencies. This 30-day notice reflects the requirements being moved from the 1010–0057 OMB control numbering series and requesting a new 1014 OMB control number. The hour burdens for this request have stayed the same as was previously approved by OMB.

Regulations implementing these responsibilities are under 30 CFR 250, Subpart C. Responses are mandatory. No questions of a sensitive nature are asked. BSEE will protect proprietary information according to 30 CFR 250.197, ''Data and information to be made available to the public or for limited inspection,'' and the Freedom of Information Act (5 U.S.C. 552) and its implementing regulations (43 CFR 2).

In general, BSEE uses the information collected under subpart C to ensure that:

- There is no threat of serious, irreparable, or immediate damage to the marine environment and to identify potential hazards to commercial fishing caused by OCS oil and gas exploration, development, and production activities;
- The lessee or operator records the location of items lost overboard to aid in recovery during site clearance activities on the lease;
- Operations are conducted according to all applicable regulations, permit conditions and requirements, and in a safe and workmanlike manner;
- Discharge or disposal of drill cuttings, sand, and other well solids, including those containing naturally occurring radioactive materials (NORM), are properly handled for the protection of OCS workers and the environment; and
- Facilities are inspected daily for the prevention of pollution, and problems observed are corrected.

Frequency: On occasion, daily.

Description of Respondents: Potential respondents comprise Federal oil, gas, or sulphur lessees and/or operators.

Estimated Reporting and Recordkeeping Hour Burden: The estimated annual hour burden for this information collection is a total of 124,665 hours. The following chart details the individual components and estimated hour burdens. In calculating the burdens, we assumed that respondents perform certain requirements in the normal course of their activities. We consider these to be usual and customary and took that into account in estimating the burden.

Citation 30 CFR 250 Subpart C and related NTL(s)	Reporting and recordkeeping requirement	Hour burden	Average Number of annual responses	Annual burden hours
Pollution Prevention				
300(b)(1), (2)	Obtain approval to add petroleum-based substance to drilling mud system or approval for method of disposal of drill cuttings, sand, & other well solids, including those containing NORM.	Burden covered under 1014–0018 (30 CFR Part 250, Subpart D)		0.
300(c)	Mark items that could snag or damage fishing devices.	0.5 hour	130 markings	65
300(d)	Report and record items lost overboard	1 hr ea × 2 = 2 hrs	106 reports/records	212
Subtotal			236 responses	277 hours
Marine Trash and Debris Awareness/Elimination NTL				
NTL; 300(a), (b)(6), (c), (d)	Submit request for training video	1 hour	100 requests	100
	Submit annual report to BSEE on training process and certification.	1 hour	200 records	200
	Training recordkeeping; make available upon request.	2 hours	200 records	400
	Post placards on vessels and structures (exempt from information collection burden because BSEE is providing exact language for the trash and debris warning, similar to the ''Surgeon General's Warning'' exemption).			0
Subtotal			500 responses	700 hours
Inspection of Facilities				
301(a) NTL	Inspect drilling/production facilities for pollution; maintain inspection/repair records 2 years.	15 min per inspection × 365 days = 91.25 hrs.	1,022 manned facilities.	93,258 (rounded)
		5 mins every 3rd day (365/3 = 122) = 10.14 hrs	3,000 unmanned facilities.	30,420
Subtotal			4,022 responses	123,678 hours
300–301	General departure and alternative compliance requests not specifically covered elsewhere in subpart C regulations.	2 hour	5 requests	10
Subtotal			5 responses	10 hours
Total Burden			4,763 Responses	124,665 Hours

Estimated Reporting and Recordkeeping Non-Hour Cost Burden: We have identified no non-hour cost burdens associated with the collection of information.

Public Disclosure Statement: The PRA (44 U.S.C. 3501, *et seq.*) provides that an agency may not conduct or sponsor a collection of information unless it displays a currently valid OMB control number. Until OMB approves a collection of information, you are not obligated to respond.

Comments: Section 3506(c)(2)(A) of the PRA (44 U.S.C. 3501, *et seq.*,) requires each agency ''* * * to provide notice * * * and otherwise consult with members of the public and affected agencies concerning each proposed collection of information * * *'' Agencies must specifically solicit comments to: (a) Evaluate whether the collection is necessary or useful; (b) evaluate the accuracy of the burden of the proposed collection of information; (c) enhance the quality, usefulness, and clarity of the information to be collected; and (d) minimize the burden on the respondents, including the use of technology.

To comply with the public consultation process, on June 30, 2011, we published a **Federal Register** notice (76 FR 38410) announcing that we would submit this ICR to OMB for approval. The notice provided the required 60-day comment period. In addition, § 250.199 provides the OMB control number for the information collection requirements imposed by the 30 CFR 250 regulations. The regulation also informs the public that they may comment at any time on the collections of information and provides the address to which they should send comments. We received two comments in response to these efforts. The first comment, submitted by a private citizen, was not germane to the paperwork burden. The second comment was from the Marine Mammal Commission in support of our submittal to OMB.

Public Availability of Comments: Before including your address, phone number, email address, or other personal identifying information in your comment, you should be aware that your entire comment—including your personal identifying information—may be made publicly available at any time. While you can ask us in your comment to withhold your personal identifying information from public review, we cannot guarantee that we will be able to do so.

Dated: August 2, 2012.

Robert W. Middleton,

Deputy Chief, Office of Offshore Regulatory Programs.

[FR Doc. 2012–21245 Filed 8–28–12; 8:45 am]

BILLING CODE 4310–VH–P

DEPARTMENT OF THE INTERIOR

Fish and Wildlife Service

[FWS–R4–R–2012–N212; FXRS126104000004A–123–FF04R08000]

Information Collection Request Sent to the Office of Management and Budget (OMB) for Approval; National Wildlife Refuge Visitor Check-In Permit and Use Report

AGENCY: Fish and Wildlife Service, Interior.

ACTION: Notice; request for comments.

SUMMARY: We (U.S. Fish and Wildlife Service) have sent an Information Collection Request (ICR) to OMB for review and approval. We summarize the ICR below and describe the nature of the collection and the estimated burden and cost. We may not conduct or sponsor and a person is not required to respond to a collection of information unless it displays a currently valid OMB control number.

DATES: You must submit comments on or before September 28, 2012.

ADDRESSES: Send your comments and suggestions on this information collection to the Desk Officer for the Department of the Interior at OMB–OIRA at (202) 395–5806 (fax) or *OIRA_DOCKET@OMB.eop.gov* (email). Please provide a copy of your comments to the Service Information Collection Clearance Officer, U.S. Fish and Wildlife Service, MS 2042–PDM, 4401 North Fairfax Drive, Arlington, VA 22203 (mail), or *INFOCOL@fws.gov* (email). Please include ''1018–XXXX'' in the subject line of your comments.

FOR FURTHER INFORMATION CONTACT: To request additional information about this ICR, contact Hope Grey at *INFOCOL@fws.gov* (email) or 703–358–2482 (telephone). You may review the ICR online at *http://www.reginfo.gov.* Follow the instructions to review Department of the Interior collections under review by OMB.

SUPPLEMENTARY INFORMATION:

OMB Control Number: 1018–XXXX.

Title: National Wildlife Refuge Visitor Check-In Permit and Use Report.

Service Form Number: 3–2405.

Type of Request: Request for a new OMB control number.

Description of Respondents: Visitors to national wildlife refuges.

Respondent's Obligation: Required to obtain or retain a benefit.

Frequency of Collection: On occasion.

Estimated Annual Number of Respondents: 650,000.

Estimated Annual Number of Responses: 650,000.

Estimated Completion Time per Response: 5 minutes.

Estimated Total Annual Burden Hours: 54,167.

Abstract: The National Wildlife Refuge System Administration Act of 1966 (16 U.S.C. 668dd–668ee), as amended by the National Wildlife Refuge System Improvement Act of 1997, and the Refuge Recreation Act of 1962 (16 U.S.C. 460k–460k–4) govern the administration and uses of national wildlife refuges and wetland management districts. We are authorized to permit public uses on lands of the National Wildlife Refuge System, including hunting, fishing, wildlife observation, wildlife photography, and environmental education and interpretation, and other visitor uses when we find that the activities are compatible and appropriate with the purpose or purposes for which the refuges were established.

We need to collect information on hunters and anglers and other visitors in order to protect refuge resources and administer and evaluate the success of visitor programs. Because of high demand and limited resources, we often provide visitor opportunities by permit, based on dates, locations, or type of public use. We may not allow all opportunities on all refuges and harvest information differs for each refuge. We are proposing to use a new form (FWS Form 3–2405) to collect this information. Not all refuges will use the form and some refuges may collect the information in a nonform format. We propose to collect:

- Information on the visitor (name, address, and contact information). This information is used to identify the visitor or driver/passengers of a vehicle while on the refuge. Having this information readily available is critical in a search and rescue situation. We will not maintain or record this information.
- Whether or not hunters/anglers were successful (number and type of harvest/caught).
- Purpose of visit (hunting, fishing, wildlife observation, wildlife photography, auto touring, birding, hiking, boating/canoeing, visitor center, special event, environmental education class, volunteering, other recreation).
- Date of visit.

This information will be a vital tool in meeting refuge objectives and maintaining quality visitor experiences. The above information will help us:

- Administer and monitor visitor programs and facilities on refuges.
- Distribute visitor permits to ensure safety of visitors.
- Ensure a quality visitor experience.
- Minimize resource disturbance, manage healthy game populations, and ensure the protection of fish and wildlife species.
- Assist in Statewide wildlife management and enforcement and develop reliable estimates of the number of all game fish and wildlife.
- Determine facility and program needs and budgets.

Comments: On May 6, 2010, we published in the **Federal Register** (75 FR 24964) a notice of our intent to request that OMB approve this information collection. In that notice, we solicited public comments for 60 days, ending July 6, 2010. We received one comment in response to this notice. The commenter expressed displeasure with the fact that this card is being used to count ''wildlife murderers,'' which this person believes is not a good use of the taxpayer's dollars. The commenter did not address the information collection requirements, and we did not make any changes to the requirements.

We again invite comments concerning this information collection on:

- Whether or not the collection of information is necessary, including whether or not the information will have practical utility;
- The accuracy of our estimate of the burden for this collection of information;
- Ways to enhance the quality, utility, and clarity of the information to be collected; and
- Ways to minimize the burden of the collection of information on respondents.

Comments that you submit in response to this notice are a matter of public record. Before including your address, phone number, email address, or other personal identifying information in your comment, you should be aware that your entire comment, including your personal identifying information, may be made publicly available at any time. While you can ask OMB in your comment to withhold your personal identifying information from public review, we cannot guarantee that it will be done.

Dated: August 21, 2012.

Tina A. Campbell,

Chief, Division of Policy and Directives Management, U.S. Fish and Wildlife Service.

[FR Doc. 2012–21269 Filed 8–28–12; 8:45 am]

BILLING CODE 4310–55–P

DEPARTMENT OF THE INTERIOR

Fish and Wildlife Service

[FWS–HQ–WSR–2012–N210; FVWF941009000007B–XXX–FF09W23000; FVWF511009000007B–XXX–FF09W23000]

Proposed Information Collection; Annual Certification of Hunting and Sport Fishing Licenses Issued

AGENCY: Fish and Wildlife Service, Interior.

ACTION: Notice; request for comments.

SUMMARY: We (U.S. Fish and Wildlife Service) will ask the Office of Management and Budget (OMB) to approve the information collection (IC) described below. As required by the Paperwork Reduction Act of 1995 and as part of our continuing efforts to reduce paperwork and respondent burden, we invite the general public and other Federal agencies to take this opportunity to comment on this IC. This IC is scheduled to expire on February 28, 2013. We may not conduct or sponsor and a person is not required to respond to a collection of information unless it displays a currently valid OMB control number.

DATES: To ensure that we are able to consider your comments on this IC, we must receive them by October 29, 2012.

ADDRESSES: Send your comments on the IC to the Service Information Collection Clearance Officer, U.S. Fish and Wildlife Service, MS 2042–PDM, 4401 North Fairfax Drive, Arlington, VA 22203 (mail); or *INFOCOL@fws.gov* (email). Please include ''1018–0007'' in the subject line of your comments.

FOR FURTHER INFORMATION CONTACT: To request additional information about this IC, contact Hope Grey at *INFOCOL@fws.gov* (email) or 703–358–2482 (telephone).

SUPPLEMENTARY INFORMATION:

I. Abstract

The Pittman-Robertson Wildlife Restoration Act (16 U.S.C. 669 et seq.) and the Dingell-Johnson Sport Fish Restoration Act (16 U.S.C. 777 et seq. except 777e–1) provide authority for Federal assistance to the States for management and restoration of fish and wildlife. These Acts and our regulations in the Code of Federal Regulations (CFR) at 50 CFR part 80, subpart D, require that States, territories, and the District of Columbia annually certify their hunting and fishing license sales. States, territories, and the District of Columbia that receive grants under these Acts use FWS Forms 3–154a (Part I—Certification) and 3–154b (Part II—Summary of Hunting and Sport Fishing Licenses Issued) to certify the number and amount of hunting and fishing license sales. We use the information collected to apportion and distribute funds according to the formula specified in each Act.

II. Data

OMB Control Number: 1018–0007.

Title: Annual Certification of Hunting and Sport Fishing Licenses Issued, 50 CFR part 80, subpart D.

Service Form Number(s): 3–154a, 3–154b.

Type of Request: Extension of a currently approved collection.

Description of Respondents: States, territories (Commonwealth of Puerto Rico, Commonwealth of the Northern Mariana Islands, Guam, U.S. Virgin Islands, and American Samoa), and District of Columbia.

Respondent's Obligation: Required to obtain or retain a benefit.

Frequency of Collection: Annually.

Estimated Annual Number of Respondents: 56.

Estimated Total Annual Responses: 112.

Estimated Time per Response: Average of 12 hours for FWS Form 3–154a and 20 hours for FWS Form 3–154b.

Estimated Total Annual Burden Hours: 1,792.

III. Comments

We invite comments concerning this information collection on:

- Whether or not the collection of information is necessary, including whether or not the information will have practical utility;
- The accuracy of our estimate of the burden for this collection of information;
- Ways to enhance the quality, utility, and clarity of the information to be collected; and
- Ways to minimize the burden of the collection of information on respondents.

Comments that you submit in response to this notice are a matter of public record. We will include or summarize each comment in our request to OMB to approve this IC. Before including your address, phone number, email address, or other personal identifying information in your comment, you should be aware that your entire comment, including your personal identifying information, may be made publicly available at any time. While you can ask us in your comment to withhold your personal identifying information from public review, we cannot guarantee that we will be able to do so.

Dated: August 21, 2012.

Tina A. Campbell,

Chief, Division of Policy and Directives Management, U.S. Fish and Wildlife Service.

[FR Doc. 2012–21291 Filed 8–28–12; 8:45 am]

BILLING CODE 4310–55–P

DEPARTMENT OF THE INTERIOR

Fish and Wildlife Service

[FWS–HQ–FHC–2012–N209; FXHC11220900000Z2–112–FF09F20000]

Information Collection Request Sent to the Office of Management and Budget (OMB) for Approval; Land-Based Wind Energy Guidelines

AGENCY: Fish and Wildlife Service, Interior.

ACTION: Notice; request for comments.

SUMMARY: We (U.S. Fish and Wildlife Service) have sent an Information Collection Request (ICR) to OMB for review and approval. We summarize the ICR below and describe the nature of the collection and the estimated burden and cost. This information collection is scheduled to expire on September 30, 2012. We may not conduct or sponsor and a person is not required to respond to a collection of information unless it displays a currently valid OMB control number. However, under OMB regulations, we may continue to conduct or sponsor this information collection while it is pending at OMB.

DATES: You must submit comments on or before September 28, 2012.

ADDRESSES: Send your comments and suggestions on this information collection to the Desk Officer for the Department of the Interior at OMB–OIRA at (202) 395–5806 (fax) or *OIRA_DOCKET@OMB.eop.gov* (email). Please provide a copy of your comments to the Service Information Collection Clearance Officer, U.S. Fish and Wildlife Service, MS 2042–PDM, 4401 North Fairfax Drive, Arlington, VA 22203 (mail), or *INFOCOL@fws.gov* (email). Please include ''1018–0148'' in the subject line of your comments.

FOR FURTHER INFORMATION CONTACT: To request additional information about this ICR, contact Hope Grey at *INFOCOL@fws.gov* (email) or 703–358–2482 (telephone). You may review the ICR online at *http://www.reginfo.gov.* Follow the instructions to review Department of the Interior collections under review by OMB.

SUPPLEMENTARY INFORMATION:

OMB Control Number: 1018–0148.

Title: Land-Based Wind Energy Guidelines.

Service Form Number: None.

Type of Request: Extension of a currently approved collection.

Description of Respondents: Developers and operators of wind energy facilities.

Respondent's Obligation: Voluntary.

Frequency of Collection: On occasion.

Activity (reporting and recordkeeping)	Number of respondents	Number of responses	Completion time per response	Total annual burden hours	Nonhour burden cost per response	Total annual nonhour burden cost
Tier 1 (Desktop Analysis)	150	150	83	12,450	$2,000	$300,000
Tier 2 (Site Characterization)	110	110	375	41,250	4,000	440,000
Tier 3 (Pre-construction studies)	80	80	2,880	230,400	23,000	1,840,000
Tier 4 (Post-construction fatality monitoring and habitat studies)	50	50	2,550	127,500	95,000	4,750,000
Tier 5 (Other post-construction studies	10	10	2,400	24,000	191,000	1,910,000
TOTALS	400	400	.....	435,600	.....	9,240,000

Estimated Annual Nonhour Burden Cost: $9,240,000. Costs will depend on the size and complexity of issues associated with each project. These expenses may include, but are not limited to: Travel expenses for site visits, studies conducted, and meetings with the Service and other Federal and State agencies; training in survey methodologies; data management; special transportation such as all-terrain vehicle or helicopter; equipment needed for acoustic, telemetry, or radar monitoring, and carcass storage.

Abstract: In January 2012, we requested that OMB approve, on an emergency basis, our request to collect information associated with the Land-Based Wind Energy Guidelines (Guidelines). We asked for emergency approval because of the potential negative effects that proposed wind energy facilities may have on wildlife and their habitat. OMB approved our request and assigned OMB Control No. 1018–0148, which expires September 30, 2012. We are asking OMB to extend the approval for this information collection for 3 years.

As wind energy production increased, both developers and wildlife agencies recognized the need for a system to evaluate and address the potential negative impacts of wind energy projects on species of concern. These voluntary Guidelines (*http://www.fws.gov/windenergy*) provide a structured, scientific process for addressing wildlife conservation concerns at all stages of land-based wind energy development. They also promote effective communication among wind energy developers and Federal, State, tribal, and local conservation agencies. When used in concert with appropriate regulatory tools, the Guidelines will be the best practical approach for conserving species of concern.

The Guidelines discuss various risks to ''species of concern'' from wind energy projects, including collisions with wind turbines and associated infrastructure; loss and degradation of habitat from turbines and infrastructure; fragmentation of large habitat blocks into smaller segments that may not support sensitive species; displacement and behavioral changes; and indirect effects such as increased predator populations or introduction of invasive plants. The Guidelines assist developers in identifying species of concern that may potentially be affected by proposed projects, including, but not limited to:

- Migratory birds;
- Bats;
- Bald and golden eagles and other birds of prey;
- Prairie and sage grouse; and
- Listed, proposed, or candidate endangered and threatened species.

The Guidelines follow a tiered approach. The wind energy developer begins at Tier 1 or Tier 2, which entails gathering of existing data to help identify any potential risks to wildlife and their habitats at proposed wind energy project sites. The developer then proceeds through subsequent tiers, as appropriate, to collect information in increasing detail until the level of risk is adequately ascertained and a decision on whether or not to develop the site can be made. Many projects may not proceed beyond Tier 1 or 2, when developers become aware of potential barriers, including high risks to wildlife. Developers would only have an interest in adhering to the Guidelines for those projects that proceed beyond Tier 1 or 2.

At each tier level, wind energy developers and operators should retain documentation to provide to the Service. Such documentation may include copies of correspondence with the Service, results of pre- and post-construction studies conducted at project sites, bird and bat conservation strategies, or any other record that supports a developer's adherence to the Guidelines. The extent of the documentation will depend on the conditions of the site being developed. Sites with greater risk of impacts to wildlife and habitats will likely involve more extensive communication with the Service and longer durations of pre- and post-construction studies than sites with little risk.

Distributed or community-scale wind energy projects are unlikely to have significant adverse impacts to wildlife and their habitats. The Guidelines recommend that developers of these small-scale projects do the desktop analysis described in Tier 1 or Tier 2 using publicly available information to determine whether they should communicate with the Service. Since such project designs usually include a single turbine associated with existing development, conducting a Tier 1 or Tier 2 analysis for distributed or community-scale wind energy projects should incur limited nonhour burden costs. These analyses are conducted using readily available existing information, so the nature of these costs may include travel to project sites. For such projects, if there is no potential risk identified, a developer will have no need to communicate with the Service regarding the project or to conduct studies described in Tiers 3, 4, and 5.

Adherence to the Guidelines is voluntary. Following the Guidelines does not relieve any individual, company, or agency of the responsibility to comply with applicable laws and regulations. Developers of wind energy projects have a responsibility to comply with the law; for example, they must obtain incidental take authorization for species protected by the Endangered Species Act (ESA) and/or Bald and Golden Eagle Protection Act (BGEPA).

Comments: On April 2, 2012, we published in the **Federal Register** (77 FR 19683) a notice of our intent to request that OMB renew approval for this information collection. In that

notice, we solicited comments for 60 days, ending on June 1, 2012. We received one comment regarding permits for the take of migratory birds, but the comment did not address the information collection requirements. We did not make any changes to the information collection.

We again invite comments concerning this information collection on:

- Whether or not the collection of information is necessary, including whether or not the information will have practical utility;
- The accuracy of our estimate of the burden for this collection of information;
- Ways to enhance the quality, utility, and clarity of the information to be collected; and
- Ways to minimize the burden of the collection of information on respondents.

Comments that you submit in response to this notice are a matter of public record. Before including your address, phone number, email address, or other personal identifying information in your comment, you should be aware that your entire comment, including your personal identifying information, may be made publicly available at any time. While you can ask OMB in your comment to withhold your personal identifying information from public review, we cannot guarantee that it will be done.

Dated: August 21, 2012.

Tina A. Campbell,

Chief, Division of Policy and Directives Management, U.S. Fish and Wildlife Service.

[FR Doc. 2012–21290 Filed 8–28–12; 8:45 am]

BILLING CODE 4310–55–P

DEPARTMENT OF THE INTERIOR

Fish and Wildlife Service

[FWS–R3–R–2012–N121; FXRS1265030000S3–123–FF03R06000]

Hamden Slough National Wildlife Refuge, Becker County, MN

AGENCY: Fish and Wildlife Service, Interior.

ACTION: Notice of availability; request for comments.

SUMMARY: We, the U.S. Fish and Wildlife Service (Service), announce the availability of a draft comprehensive conservation plan (CCP) and environmental assessment (EA) for the Hamden Slough National Wildlife Refuge (Refuge, NWR) for public review and comment. In this draft CCP/EA we describe how we propose to manage the refuge for the next 15 years.

DATES: To ensure consideration, we must receive your written comments by September 28, 2012. We will hold open house-style meetings during the comment period to receive comments and provide information on the draft plan. In addition, we will use special mailings, newspaper articles, Internet postings, and other media announcements to inform people of opportunities for input.

ADDRESSES: Send your comments or requests for more information by any one of the following methods:

- *Email: r3planning@fws.gov.* Include ''Hamden Slough Draft CCP/EA'' in the subject line of the message.
- *Fax:* Attention: Refuge Manager, Hamden Slough NWR, 218–847–4156.
- *U.S. Mail:* Attention: Ryan Frohling, Refuge Manager, Hamden Slough NWR (managed by Detroit Lakes Wetland Management District), 26624 N. Tower Road, Detroit Lakes, MN 56501.
- *In-Person Drop Off:* You may drop off comments during regular business hours at the above addresses.

You will find the draft CCP/EA, as well as information about the planning process and a summary of the CCP, on the planning Web site: *http://www.fws.gov/midwest/planning/hamdenslough/index.html.*

FOR FURTHER INFORMATION CONTACT: Ryan Frohling, 218–847–4431.

SUPPLEMENTARY INFORMATION:

Introduction

With this notice, we continue the CCP process for Hamden Slough National Wildlife Refuge, which we began by publishing a notice of intent in the **Federal Register** (75 FR 7289) on February 18, 2010. For more about the initial process and the history of this refuge, see that notice.

Background

The National Wildlife Refuge System Administration Act of 1966, as amended by the National Wildlife Refuge System Improvement Act of 1997 (16 U.S.C. 668dd–668ee) (Administration Act), requires us to develop a CCP for each national wildlife refuge. The purpose in developing a CCP is to provide refuge managers with a 15-year strategy for achieving refuge purposes and contributing toward the mission of the National Wildlife Refuge System (NWRS), consistent with sound principles of fish and wildlife management, conservation, legal mandates, and Service policies. In addition to outlining broad management direction on conserving wildlife and their habitats, CCPs identify wildlife-dependent recreational opportunities available to the public, including opportunities for hunting, fishing, wildlife observation and photography, and environmental education and interpretation. We will review and update the CCP at least every 15 years in accordance with the Administration Act.

Each unit of the NWRS was established for specific purposes. We use these purposes as the foundation for developing and prioritizing the management goals and objectives for each refuge within the NWRS mission, and to determine how the public can use each refuge. The planning process is a way for us and the public to evaluate management goals and objectives that will ensure the best possible approach to wildlife, plant, and habitat conservation, while providing for wildlife-dependent recreation opportunities that are compatible with each refuge's establishing purposes and the mission of the NWRS.

Additional Information

The draft CCP/EA may be found at *http://www.fws.gov/midwest/planning/hamdenslough/index.html.* That document incorporates an EA, prepared in accordance with the National Environmental Policy Act (NEPA) (43 U.S.C. 4321 et seq.). The draft CCP/EA includes detailed information about the planning process, refuge, issues, and management alternatives considered and proposed. The EA includes discussions of three alternative refuge management options. The Service's preferred alternative is reflected in the draft CCP.

The alternatives analyzed in detail include:

- Alternative A: Current Management (No Action)—This alternative reflects the current management direction of Hamden Slough NWR. It provides the baseline against which to compare other alternatives. For NEPA purposes, this is referred to as the ''No Action'' alternative.
- Alternative B: Wetland Focus—This alternative would focus on increasing the quantity and quality of habitat for waterfowl. Acquisition and full restoration of Pierce Lake would be emphasized over the next 15 years. The hydrologic regime would better emulate natural seasonal and long-term variability. More diverse, sustainable vegetation patterns would be restored on Refuge wetlands.
- Alternative C: Wetland and Prairie Focus (Preferred Alternative)—This alternative would focus on increasing the quantity and quality of habitat for wetland and grassland birds. Acquisition and full restoration of

Pierce Lake would be emphasized over the next 15 years. The hydrologic regime would better emulate natural seasonal and long-term variability. More diverse, sustainable vegetation patterns would be restored on Refuge wetlands and prairies. A detailed description of objectives and actions included in this preferred alternative is found in chapter 4 of the Draft CCP.

Public Involvement

We will give the public an opportunity to provide input at a public meeting. You can obtain the schedule from the address or Web site listed in this notice (see **ADDRESSES**). You may also submit comments anytime during the comment period.

Public Availability of Comments

Before including your address, phone number, email address, or other personal identifying information in your comment, you should be aware that your entire comment—including your personal identifying information—may be made publicly available at any time. While you can ask us in your comment to withhold your personal identifying information from public review, we cannot guarantee that we will be able to do so.

Chris Jensen,

Assistant Regional Director, Midwest Region, U.S. Fish and Wildlife Service.

[FR Doc. 2012–21301 Filed 8–28–12; 8:45 am]

BILLING CODE 4310–55–P

DEPARTMENT OF THE INTERIOR

Bureau of Indian Affairs

Request for Nominations of Members To Serve on the Bureau of Indian Education Advisory Board for Exceptional Children

AGENCY: Bureau of Indian Affairs, Interior.

ACTION: Notice of Request for Nominations.

SUMMARY: Pursuant to the Federal Advisory Committee Act, the Bureau of Indian Education (BIE) requests nominations of individuals to serve on the Advisory Board for Exceptional Children (Advisory Board). There are five positions available. The BIE will consider nominations received in response to this Request for Nominations, as well as other sources. The **SUPPLEMENTARY INFORMATION** section for this notice provides committee and membership criteria.

DATES: Nominations must be received on or before October 1, 2012.

ADDRESSES: Submit nomination applications to Sue Bement, Designated Federal Officer, Bureau of Indian Education, Albuquerque Service Center, Division of Performance and Accountability, 1011 Indian School Road NW., Suite 332, Albuquerque, NM 87104–1088, telephone (505) 563–5274 or fax (505) 563–5281, Attention: Sue Bement.

FOR FURTHER INFORMATION CONTACT: Sue Bement, Education Specialist, at the above-listed address and telephone number.

SUPPLEMENTARY INFORMATION: The Advisory Board was established in accordance with the Federal Advisory Committee Act, 5 U.S.C. App. 2. The following provides information about the Committee, the membership and the nomination process.

1. Objective and Duties

(a) Members of the Advisory Board will provide guidance, advice and recommendations with respect to special education and related services for children with disabilities in Bureau-funded schools in accordance with the requirements of IDEA;

(b) The Advisory Board will:

(1) Provide advice and recommendations for the coordination of services within the BIE and with other local, state and federal agencies;

(2) Provide advice and recommendations on a broad range of policy issues dealing with the provision of educational services to American Indian children with disabilities;

(3) Serve as advocates for American Indian students with special education needs by providing advice and recommendations regarding best practices, effective program coordination strategies, and recommendations for improved educational programming;

(4) Provide advice and recommendations for the preparation of information required to be submitted to the Secretary of Education under 20 U.S.C. 1411(h)(2);

(5) Provide advice and recommend policies concerning effective inter/intra-agency collaboration, including modifications to regulations, and the elimination of barriers to inter/intra-agency programs and activities;

(6) Report and direct all correspondence to the Assistant Secretary—Indian Affairs through the Director, BIE with a courtesy copy to the Designated Federal Officer (DFO).

2. Membership

(a) Pursuant to 20 U.S.C. 1411(h)(6), the Advisory Board will be composed of up to 15 individuals involved in or concerned with the education and provision of services to Indian infants, toddlers, children and youth with disabilities. The Advisory Board composition will reflect a broad range of viewpoints and will include at least one member representing each of the following interests: Indians with disabilities; teachers of children with disabilities; Indian parents or guardians of children with disabilities; service providers; state education officials; local education; state interagency coordinating councils (for states having Indian reservations); Tribal representatives or Tribal organization representatives; and other members representing the divisions and entities of the BIE.

(b) The Assistant Secretary—Indian Affairs may provide the Secretary of the Interior recommendations for the chairperson; however, the chairperson and other Advisory Board members will be appointed by the Secretary. Advisory Board members shall serve staggered terms of two years or three years from the date of their appointment.

3. Miscellaneous

(a) Members of the Advisory Board will not receive compensation, but will be reimbursed for travel, including subsistence, and other necessary expenses incurred in the performance of their duties in the same manner as persons employed intermittently in government service under 5 U.S.C. 5703.

(b) A member may not participate in matters that will directly affect, or appear to affect, the financial interests of the member or the member's spouse or minor children, unless authorized by the appropriate ethics official. Compensation from employment does not constitute a financial interest of the member so long as the matter before the committee will not have a special or distinct effect on the member or the member's employer, other than as part of a class. The provisions of this paragraph do not affect any other statutory or regulatory ethical obligations to which a member may be subject.

(c) The Advisory Board meets at least twice a year, budget permitting, but additional meetings may be held as deemed necessary by the Assistant Secretary—Indian Affairs or DFO.

(d) All Advisory Board meetings are open to the public in accordance with the Federal Advisory Committee Act regulations.

4. Nomination Information

(a) Nominations are requested from individuals, organizations, and federally recognized tribes, as well as from state directors of Special Education (within the 23 states in which Bureau-funded schools are located) concerned with the education of Indian children with disabilities as described above.

(b) Nominees should have expertise and knowledge of the issues and needs of American Indian children with disabilities. This knowledge and expertise are needed to provide advice and recommendations to the BIE regarding the needs of American Indian children with disabilities.

(c) A summary of the candidate's qualifications (résumé or curriculum vitae) must be provided. Nominees must have the ability to attend Advisory Board meetings, carry out Advisory Board assignments, participate in conference calls, and work in groups.

Basis for Nominations

If you wish to nominate someone for appointment to the Advisory Board, please do not make the nomination until the person has been contacted and has agreed to have his or her name submitted to BIE for this purpose.

Nomination Application

(Please fill out this form completely and include a copy of the nominee's résumé or curriculum vitae.)

Note: Additional pages may be added for further explanation of any item. Reference the corresponding item number for which the additional explanation is made.

Bureau of Indian Education

Advisory Board for Exceptional Children

Nomination Information

A. Nominations are requested from individuals, organizations, and federally recognized tribes, as well as from State Directors of Special Education (within the 23 states in which Bureau funded schools are located) concerned with the education of American Indian children with disabilities as described above.

B. Nominees should have expertise and knowledge of the issues and needs of American Indian children with disabilities. This knowledge and expertise are needed to provide advice and recommendations to the BIE regarding the needs of American Indian children with disabilities.

C. A summary of the candidate's qualifications (*résumé or curriculum vitae) must be included with the nomination.* Nominees must have the ability to (1) attend Advisory Board meetings, (2) carry out committee assignments, (3) participate in conference calls, and (4) work in groups.

Objective and Duties

A. The Advisory Board provides guidance, advice, and recommendations with respect to special education and related services for children with disabilities in BIE-funded schools in accordance with the requirements of the Individuals with Disabilities Education Act (IDEA), 20 U.S.C. 1400 et seq.

B. The Advisory Board provides advice and recommendations for the coordination of services within the BIE and with other local, State, and Federal agencies.

C. The Advisory Board provides advice and recommendations on a broad range of policy issues dealing with provision of educational services to American Indian children with disabilities.

D. The Advisory Board serves as an advocate for American Indian students with special education needs by providing advice and recommendations regarding best practices, effective program coordination strategies, and recommendations for improved educational programming.

E. The Advisory Board provides advice and recommendations for preparation of information required to be submitted to the Secretary of Education.

F. The Advisory Board provides advice and recommends policies concerning effective inter/intra-agency collaboration, including modifications to regulations, and elimination of barriers to inter/intra-agency programs and activities.

G. The Advisory Board reports and directs all correspondence to the Assistant Secretary—Indian Affairs through the Director of the Bureau of Indian Education with a courtesy copy to the DFO.

Membership

A. The Advisory Board will be composed of up to 15 members. The Assistant Secretary—Indian Affairs may provide the Secretary of the Interior recommendations for the Chairperson. However, all Advisory Board members will be appointed by the Secretary of the Interior as required. Advisory Board members will serve staggered terms of two years or three years from the date of their appointment. The Secretary may remove members from the Advisory Board at any time at his or her discretion.

B. As required by IDEA, the Advisory Board will be composed of individuals involved in or concerned with the education and provision of services to Indian children with disabilities. The Advisory Board composition will reflect a broad range of viewpoints and will include at least one member representing each of the following interests: Indian persons with disabilities; teachers of children with disabilities; Indian parents or guardians of children with disabilities; service providers; State Education Officials; Local Education Officials; State Interagency Coordinating Councils (for states having Indian reservations); tribal representatives or tribal organization representatives; and BIA employees concerned with the education of children with disabilities.

C. Members of the Advisory Board will not receive compensation, but will be reimbursed for travel, subsistence and other necessary expenses incurred in the performance of their duties consistent with the provisions of 5 U.S.C. 5703.

D. A member may not participate in matters that will directly affect, or appear to affect, the financial interests of the member or the member's spouse or minor children, unless authorized by the appropriate ethics official. Compensation from employment does not constitute a financial interest of the member so long as the matter before the committee will not have a special or distinct effect on the member or the member's employer, other than as part of a class. The provisions of this paragraph do not affect any other statutory or regulatory ethical obligations to which a member may be subject.

E. The Advisory Board meets at least twice a year, budget permitting, but additional meetings may be held as deemed necessary by the Assistant Secretary—Indian Affairs or DFO.

BILLING CODE 4310–6W–P

PLEASE FILL OUT FORM COMPLETLEY

Note: *Additional pages may be added for further explanation of any item. Reference the corresponding item number for which the additional explanation is made.*

1. Full Name:			
2. Mailing Address:	3. City:	4. State:	5. Zip Code:
6. Primary Contact Phone Number: ( )	7. Secondary Contact Phone Number: ( )		
8. Place of Employment:			
9. Work Address:	10. City:	11. State:	12. Zip Code:
13. Employment Title:			
14. Work Telefax Number: ( )	15. E-mail address:		

Note to Review Committee: *Prior to submitting this nomination application, the above named individual must be contacted regarding his/her appointment to the Advisory Board. Do not make nomination until this person has been contacted and has agreed to have his/her name submitted to the Bureau of Indian Education.*

16. **If appointed, this person will represent one of the following categories (check all applicable):**

_____ Indian persons with disabilities

_____ Teachers of children with disabilities

_____ Indian parents or guardians of children with disabilities

_____ Service providers

_____ State Education Officials

_____ Local Education Officials

_____ State Interagency Coordinating Councils (for states having Indian reservations)

_____ Tribal representatives or tribal organization representatives

_____ Bureau employees concerned with the education of children with disabilities

17. **What role would you recommend this nominee serve?**

_____ Advisory Board Chairperson

_____ Advisory Board Member

18. **Nominee's experience with Bureau-funded schools (check all applicable):**

_____ BIE Day School

_____ BIE Boarding School

_____ Off-Reservation Boarding School

_____ Tribal Contract School

_____ Tribal Grant School

_____ Cooperative School

19. **Provide information highlighting experiences related to the education of Indian infants, toddler, children and youth with disabilities. Include time frames of experience or employment, position titles, location of employment or organization involvement and a brief description of duties. (Attach additional pages if necessary.)**

20. **Provide a list of membership or affiliation with professional education organizations, particularly special education organizations. Identify organization offices held if applicable. (Attach additional pages if necessary.)**

21. **Identify special interests, activities, awards (professional, educational and community) related to the education of disabled Indian children (infants, toddler, children and/or youth). (Attach additional pages if necessary.)**

22. **Nominee recommended by:**

Name of Indian tribe, organization, individual (include position title) making nomination:		
Address of Indian tribe, organization, individual making nomination:		
City:	State:	Zip Code:
Signature of Authorizing Official:		
Date of Signature:	Phone (Area code + Number):	Telefax (Area code + Number):

Deadline

Submit nominations on or before October 1, 2012.

Address

Please submit nominations to Sue Bement, Designated Federal Officer, Bureau of Indian Education, Albuquerque Service Center, Division of Performance and Accountability, 1011 Indian School Road NW., Albuquerque, NM 87104–1088, telephone 505–563–5274 or fax to 505–563–5281.

Contact

For further information, contact Sue Bement, Education Specialist, Albuquerque Service Center, Division of Performance and Accountability, at the above listed address and telephone number.

Dated: August 23, 2012.

Donald E. Laverdure,

Acting Assistant Secretary—Indian Affairs.

[FR Doc. 2012–21247 Filed 8–28–12; 8:45 am]

BILLING CODE 4310–6W–P

DEPARTMENT OF THE INTERIOR

Bureau of Land Management

[LLCAD06000 L51010000.ER0000.LVRWB12B4840]

Notice of Intent To Prepare an Environmental Impact Statement for the Rio Mesa Gen-Tie Project and Possible Land Use Plan Amendment, Riverside County, CA

AGENCY: Bureau of Land Management, Interior.

ACTION: Notice of intent.

SUMMARY: In compliance with the National Environmental Policy Act of 1969, as amended, (NEPA) and the Federal Land Policy and Management Act of 1976, as amended (FLPMA), the Bureau of Land Management (BLM) Palm Springs South Coast Field Office, Palm Springs, California, intends to prepare an Environmental Impact Statement (EIS) for the Rio Mesa Gen-Tie Project. The proposed project would require an amendment to the California Desert Conservation Area (CDCA) Plan (1980 as amended), which would be evaluated in this EIS. By this notice, the BLM is announcing the beginning of the scoping process to solicit public comments and identify issues related to the EIS/plan amendment (PA).

DATES: This notice initiates the public scoping process for the EIS/PA. Comments on issues related to the EIS/PA may be submitted in writing until September 28, 2012. The date(s) and location(s) of any scoping meetings will be announced at least 15 days in advance through local media, newspapers and the BLM Web site at: *http://www.blm.gov/ca/st/en/fo/palmsprings/Solar_Projects.html.* In order to be included in the analysis, all comments must be received prior to the close of the 30-day scoping period or 15 days after the last public meeting, whichever is later. We will provide additional opportunities for public participation as appropriate.

ADDRESSES: You may submit scoping comments for the proposed Rio Mesa Gen-Tie Project by any of the following methods:

- *Web site: http://www.blm.gov/ca/st/en.html;*
- *Email: CARioMesa@blm.gov;*
- *Fax:* 951–697–5299; or
- *Mail:* Lynnette Elser, Planning and Environmental Coordinator, BLM California Desert District Office, 22835 Calle San Juan de Los Lagos, Moreno Valley, CA 92553.

Documents pertinent to this proposal may be examined at the BLM Palm Springs South Coast Field Office, 1201 Bird Center Drive, Palm Springs, CA 92262 or at the BLM California Desert District Office.

For further information and/or to have your name added to our mailing list, contact Lynnette Elser, Planning and Environmental Coordinator; telephone 951–697–5233; address 22835 Calle San Juan de Los Lagos, Moreno Valley, CA 92553; email *lelser@blm.gov.* Persons who use a telecommunications device for the deaf (TDD) may call the Federal Information Relay Service (FIRS) at 800–877–8339 to contact the above individual during normal business hours. The FIRS is available 24 hours a day, 7 days a week, to leave a message or question with the above individual. You will receive a reply during normal business hours.

SUPPLEMENTARY INFORMATION: The applicant, Rio Mesa Solar Holdings, LLC, has requested a right-of-way (ROW) authorization to construct, operate, maintain, and decommission an approximately 8-mile generation interconnection transmission (gen-tie) line, an approximately 3-mile emergency power line and an approximately 1.6 miles of access roads on BLM-managed land. Through an application with the California Energy Commission, the applicant proposes to construct an approximately 3805-acre, 500-MW solar generation facility on nearby private lands. The above-identified components proposed on BLM-managed lands in Riverside County approximately 13 miles southwest of Blythe, California, would support this thermal power plant project. The Project's 230-kilovolt (kV) gen-tie line is proposed to parallel the existing Imperial Irrigation District F Line from where it crosses the Rio Mesa generation site north to the Southern California Edison Colorado River Substation where it could connect the Project to the regional transmission grid. Due to the number of transmission lines in this location, the BLM will consider whether the CDCA Plan should be amended by designating this area as a utility corridor. Additionally two pathways for 33-kV lines providing electrical service to the Project and two pathways for roads providing access to the Project are proposed on BLM-administered lands. If approved, project construction would begin in 2013 and would take approximately 24 months to complete.

The purpose of the public scoping process is to determine relevant issues that will influence the scope of the environmental analysis, including alternatives, and guide the process for developing the Draft EIS/PA. The BLM has identified the following preliminary issues: Air quality, biological resources, recreation, cultural resources, water resources, geological resources, special management areas, land use, noise, paleontological resources, public health, socioeconomic, soils, and traffic and transportation, visual resources. It should be noted that the BLM has determined that the proposed solar facility on private property is a connected action, and the BLM plans to analyze the potential effects of the solar facility in the EIS.

Pursuant to the BLM's CDCA Plan, sites associated with transmission above 161kV not identified in the CDCA Plan will be considered through the plan amendment process to determine the suitability of the site for energy transmission. Since a portion of the gen-tie route was not previously identified as a designated utility corridor, its authorization would require amendment of the CDCA Plan. By this notice, the BLM is complying with requirements in 43 CFR 1610.2(c) to notify the public of potential amendments to CDCA Plan predicated on the findings in the EIS. If a land use plan amendment is necessary, the BLM will integrate the land use planning process with the NEPA process for the Project. A preliminary list of the potential planning criteria that will be used to help guide and define the scope of the plan amendment process includes:

1. The plan amendments will be completed in compliance with FLPMA, NEPA, and all other relevant Federal

laws, executive orders, and BLM policies;

2. Existing, valid plan decisions will not be changed and any new plan decisions will not conflict with existing plan decisions; and

3. The plan amendment(s) will recognize valid existing rights.

You may submit comments on issues and planning criteria in writing to the BLM at any public scoping meeting, or you may submit them to the BLM using one of the methods listed in the **ADDRESSES** section above. To be most helpful, you should submit comments by the close of the 30-day scoping period or within 15 days after the last public meeting, whichever is later.

Before including your address, phone number, email address, or other personal identifying information in your comment, you should be aware that your entire comment—including your personal identifying information—may be made publicly available at any time. While you can ask us in your comment to withhold your personal identifying information from public review, we cannot guarantee that we will be able to do so.

The BLM will utilize and coordinate the NEPA public participation requirements to assist the agency in satisfying the public involvement requirements under Section 106 of the National Historic Preservation Act (NHPA) (16 U.S.C. 470(f)) as provided for in 36 CFR 800.2(d)(3). Information about historic and cultural resources within the area potentially affected by the proposed Rio Mesa Project and potential CDCA Plan amendment will assist the BLM in identifying and evaluating impacts to such resources in the context of both NEPA and Section 106 of the NHPA.

The BLM will consult with Indian tribes on a government-to-government basis in accordance with Executive Order 13175 and other policies. Tribal concerns, including impacts on Indian trust assets, will be given due consideration. Federal, State, and local agencies, along with tribes and other stakeholders that may be interested or affected by the proposed action that the BLM is evaluating, are invited to participate in the scoping process and, if eligible, may request or be requested by the BLM to participate in the development of the environmental analysis as a cooperating agency.

The BLM will evaluate identified issues to be addressed in the plan, and will place them into one of three categories:

1. Issues to be resolved in the plan amendment;

2. Issues to be resolved through policy or administrative action; or

3. Issues beyond the scope of this plan amendment.

The BLM will provide an explanation in the EIS as to why an issue was placed in category two or three. The public is also encouraged to identify any management questions and concerns that should be addressed in the plan amendment. The BLM will work collaboratively with interested parties to identify the management decisions that are best suited to local, regional, and national needs and concerns.

The BLM will use an interdisciplinary approach to develop the plan amendment in order to consider the variety of resource issues and concerns identified. Specialists with expertise in the following disciplines will be involved in the planning process: Rangeland management, minerals and geology, outdoor recreation, archaeology, paleontology, wildlife and fisheries, lands and realty, hydrology, soils, and sociology and economics.

Authority: 40 CFR 1501.7 and 43 CFR 1610.2.

Thomas Pogacnik,

Deputy State Director, California.

[FR Doc. 2012–21272 Filed 8–28–12; 8:45 am]

BILLING CODE 4310–40–P

DEPARTMENT OF THE INTERIOR

Bureau of Land Management

[WYW 163447]

Notice of Proposed Withdrawal and Opportunity for Public Meeting; Wyoming; Correction

AGENCY: Bureau of Land Management, Interior.

ACTION: Correction.

SUMMARY: This action corrects the acreage referenced in the **SUMMARY** and **SUPPLEMENTARY INFORMATION** sections of a notice published in the **Federal Register** on Friday, September 1, 2006 (71 FR 52144).

On page 52144, column 1, line 24 of the notice, which reads ''approximately 427 acres of public land,'' is hereby corrected to read, ''approximately 504 acres of public land.''

On page 52144, column 2, line 20 of the notice, which reads ''The area described contains 427 acres,'' is hereby corrected to read, ''The area described contains 504 acres.''

Donald A. Simpson,

State Director, Wyoming.

[FR Doc. 2012–21273 Filed 8–28–12; 8:45 am]

BILLING CODE 4310–55–P

DEPARTMENT OF THE INTERIOR

Bureau of Ocean Energy Management

[BOEM–2011–0082]

Right-of-Way Grant of Submerged Lands on the Outer Continental Shelf to Support Renewable Energy Development

AGENCY: Bureau of Ocean Energy Management (BOEM), Interior.

ACTION: Request for comment.

SUMMARY: BOEM Form 0009 would be used to issue Outer Continental Shelf (OCS) renewable energy right-of-way (ROW) grants in order to streamline this process and increase efficiency and consistency for applicants. As defined by BOEM regulations at 30 CFR Part 585, an ROW grant is an authorization issued for use of a portion of the OCS for the construction and use of a cable or pipeline for the purpose of gathering, transmitting, distributing, or otherwise transporting electricity or other energy product generated or produced from renewable energy, but does not constitute a project easement. The ability of an ROW grantee to install such a cable or pipeline and operate such activities would be subject to the applicable approvals specified in 30 CFR Part 585. BOEM has developed the form included in this notice and invites comments on the draft form. Following the 30-day comment period, BOEM will review all submitted comments, and publish a final version of the form in the **Federal Register**.

DATES: Submit written comments by September 28, 2012.

FOR FURTHER INFORMATION CONTACT: Maureen A. Bornholdt, Program Manager, Office of Renewable Energy Programs at (703) 787–1300.

ADDRESSES: You may submit comments by either of the following methods listed below.

- *Electronically:* go to *http://www.regulations.gov.* In the entry titled ''Enter Keyword or ID,'' enter docket BOEM–2011–0082 then click ''search.'' Follow the instructions to submit public comments and view supporting and related materials. All comments will be posted on *www.regulations.gov.*
- Mail or hand-carry comments to the Department of the Interior; Bureau of Ocean Energy Management; Attention: Jennifer Golladay; 381 Elden Street, HM 1328; Herndon, Virginia 20170. Please reference the docket number and title in your comment and include your name and return address.

Public Comment Procedures: Before including your address, phone number,

email address, or other personal identifying information in your comment, you should be aware that your entire comment—including your personally identifiable information—may be made publicly available at any time. While you may ask us in your comment to withhold particular information from public view, we cannot guarantee that we will be able to do so. Information that is not labeled as privileged or confidential will be regarded as suitable for public release.

Authority: 43 U.S.C. 1331 *et seq.*

Dated: August 20, 2012.

Tommy P. Beaudreau,

Director, Bureau of Ocean Energy Management.

UNITED STATES DEPARTMENT OF THE INTERIOR BUREAU OF OCEAN ENERGY MANAGEMENT **RIGHT-OF-WAY GRANT OF SUBMERGED LANDS ON THE OUTER CONTINENTAL SHELF TO SUPPORT RENEWABLE ENERGY DEVELOPMENT** ***Paperwork Reduction Act of 1995 statement:*** *This form does not constitute an information collection as defined by 44 U.S.C. § 3501 et seq, and therefore does not require approval by the Office of Management and Budget.*	Office	Renewable Energy Grant Number
	Cash Bonus	Official Protraction Diagram(s)
	Effective Date	

This right-of-way (ROW) grant, which includes any addenda hereto, is hereby entered into by and between the United States of America, ("Grantor"), acting through the Bureau of Ocean Energy Management ("BOEM"), its authorized officer, and

Grantee	Interest Held

("Grantee"). This grant is effective on the date written above ("Effective Date") and will continue in effect until the grant terminates as set forth in Addendum "B." In consideration of any cash payment heretofore made by the Grantee to the Grantor and in consideration of the promises, terms, conditions, covenants, and stipulations contained herein and attached hereto, the Grantee and Grantor agree as follows:

Section 1: Statutes and Regulations.

This grant is issued pursuant to subsection 8(p) of the Outer Continental Shelf Lands Act ("the Act"); 43 U.S.C. §§ 1331 *et seq*. This grant is subject to the Act and regulations promulgated pursuant to the Act, including but not limited to, offshore renewable energy and alternate use regulations at 30 C.F.R. Part 585 as well as other applicable statutes and regulations in existence on the Effective Date of this grant. This grant is also subject to those statutes enacted (including amendments to the Act and other statutes) and regulations promulgated thereafter, except to the extent that they explicitly conflict with an express provision of this grant. It is expressly understood that amendments to existing statutes and regulations, including but not limited to the Act, may be made, and/or new statutes may be enacted or new regulations promulgated, which do not explicitly conflict with an express provision of this grant, and that the Grantee bears the risk that such may increase or decrease the Grantee's obligations under the grant.

Section 2: Rights of the Grantee.

(a) The Grantor hereby grants to the Grantee the exclusive right and privilege, subject to the terms and conditions of this grant and applicable regulations, to

conduct activities in the area identified in Addendum A of this grant ("granted area") that are described in a General Activities Plan (GAP) that has been approved by the Grantor. This grant does not, by itself, authorize any activity within the granted area.

(b) The rights granted to the Grantee herein are limited to those activities described in a GAP approved by the Grantor. The rights granted to the Grantee are limited by the grant-specific terms, conditions, and stipulations required by the Grantor per Addendum C.

(c) This grant does not authorize the Grantee to conduct activities on the Outer Continental Shelf (OCS) relating to or associated with the exploration for, or development or production of, oil, gas, or other seabed minerals.

Section 3: Reservations to the Grantor.

(a) All rights in the granted area not expressly granted to the Grantee by the Act, applicable regulations, this grant, or any approved GAP are hereby reserved to the Grantor.

(b) The Grantor retains the right to require revisions to an approved GAP, pursuant to 30 C.F.R. § 585.655.

(c) The Grantor reserves the right to suspend the Grantee's operations in accordance with the national security and defense provisions of section 12 of the Act and applicable regulations.

(d) The Grantor reserves the right to authorize other uses within the granted area that will not unreasonably interfere with activities described in Addendum "A."

Section 4: Payments.

The Grantee must make all rent payments in accordance with applicable regulations in 30 C.F.R Part 585, unless otherwise specified in Addendum "B."

Section 5: Plans.

The Grantee may conduct those activities described in Addendum "A" only in accordance with a GAP approved by the Grantor. The Grantee may not deviate from an approved GAP except as provided in applicable regulations in 30 CFR Part 585.

Section 6: Conduct of Activities.

The Grantee must conduct all activities in the granted area in accordance with an approved GAP, and with all applicable laws regulations.

The Grantee further agrees that no activities authorized by this grant will be carried out in a manner that:

(a) could unreasonably interfere with or endanger activities or operations carried out under any lease or grant issued or maintained pursuant to the Act, or under any other license or approval from any Federal agency;

(b) could cause any undue harm or damage to the environment;

(c) could create hazardous or unsafe conditions; or

(d) could adversely affect sites, structures, or objects of historical, cultural, or archaeological significance, without notice to and direction from the Grantor on how to proceed.

Section 7: Violations, Suspensions, Cancellations, and Remedies

If the Grantee fails to comply with (1) any of the provisions of the Act or regulations, (2) the approved GAP, or (3) the terms of this grant, including associated Addenda, the Grantor may exercise any of the remedies that are provided under the Act and applicable regulations, including, without limitation, issuance of cessation of operations orders, suspension or cancellation of the grant, and/or the imposition of penalties, in accordance with the Act and applicable regulations. The Grantor may also cancel this grant for reasons set forth in subsection 5(a)(2) of the Act (43 U.S.C. § 1334(a)(2)), or for other reasons provided by the Grantor pursuant to 30 C.F.R. § 585.437.

Non-enforcement by the Grantor of a remedy for any particular violation of the applicable provisions of the Act or regulations, or the terms of this grant, shall not prevent the Grantor from exercising any remedy, including cancellation of this grant, for any other violation or for the same violation occurring at any other time.

Section 8: Indemnification.

The Grantee hereby agrees to indemnify the Grantor for, and hold the Grantor harmless from, any claim caused by or resulting from any of the Grantee's operations or activities on the granted area or arising out of any activities conducted by or on behalf of the Grantee or its employees, contractors (including Operator, if applicable), subcontractors, or their employees, under this grant, including claims for:

a. loss or damage to natural resources,
b. the release of any petroleum or any Hazardous Materials,
c. other environmental injury of any kind,
d. damage to property,
e. injury to persons, and/or
f. costs or expenses incurred by the Grantor.

The Grantee shall not be liable for any losses or damages proximately caused by the activities of the Grantor or the Grantor's employees, contractors, subcontractors, or their

employees. The Grantee shall pay the Grantor for damages, costs, or expenses due pursuant to this section within ninety (90) days after written demand by the Grantor. Nothing in this grant shall be construed to waive any liability or relieve the Grantee from any penalties, sanctions, or claims that would otherwise apply by statute, regulation, operation of law, or could be imposed by the Grantor or other government agency acting under such laws.

"Hazardous Material" means

1. Any substance or material defined as hazardous, a pollutant, or a contaminant under the Comprehensive Environmental Response, Compensation, and Liability *Act* at 42 U.S.C. §§ 9601(14) and (33);
2. Any regulated substance as defined by the Resource Conservation and Recovery Act ("RCRA") at 42 U.S.C. § 6991 (7), whether or not contained in or released from underground storage tanks, and any hazardous waste regulated under RCRA pursuant to 42 U.S.C. §§ 6921, *et seq*;
3. Oil, as defined by the Clean Water Act at 33 U.S.C. § 1321(a)(1) and the Oil Pollution Act at 33 U.S.C. § 2701(23); or
4. Other substances that applicable Federal, state, tribal, or local laws define and regulate as "hazardous."

Section 9: Financial Assurance.

The Grantee must provide and maintain at all times a surety bond(s) or other form(s) of financial assurance approved by the Grantor in the amount specified in Addendum "B." As provided by the applicable regulations in 30 C.F.R. Part 585, if, at any time during the term of this grant, the Grantor requires additional financial assurance, then the Grantee shall furnish the additional financial assurance required by the Grantor in a form acceptable to the Grantor within ninety (90) days after receipt of Grantor's notice of such adjustment.

Section 10: Assignment or Transfer of Grant.

This grant may not be assigned or transferred in whole or in part without written approval of the Grantor. The Grantor reserves the right, in its sole discretion, to deny approval of the Grantee's application to transfer or assign all or part of this grant. Any assignment will be effective on the date the Grantor approves the Grantee's application. Any assignment made in contravention of this section is void.

Section 11: Relinquishment of Grant.

The Grantee may relinquish this entire grant or any officially designated subdivision thereof by filing with the appropriate office of the Grantor a written relinquishment application, in accordance with applicable regulations in 30 C.F.R. Part 585. No relinquishment of this grant or any portion thereof will relieve the Grantee or its surety of the obligations accrued hereunder, including but not limited to, the responsibility to remove property and restore the granted area pursuant to section 12 of this grant and applicable regulations.

Section 12: Removal of Property and Restoration of the Granted Area on Termination of Grant.

Unless otherwise authorized by the Grantor, pursuant to the applicable regulations in 30 C.F.R. Part 585, the Grantee must remove or decommission all facilities, projects, cables, pipelines, and obstructions and clear the seafloor of all obstructions created by the Grantee's activities on the granted area within 2 years following grant termination, whether by expiration, cancellation, contraction, or relinquishment, in accordance with any GAP and applicable regulations in 30 C.F.R. Part 585.

Section 13: Safety Requirements.

The Grantee must:

a. maintain all places of employment for activities authorized under this grant in compliance with occupational safety and health standards and, in addition, free from recognized hazards to employees of the Grantee or of any contractor or subcontractor operating under this grant;

b. maintain all operations within the granted area in compliance with regulations in 30 C.F.R. Part 585 and orders from the Grantor and other Federal agencies with jurisdiction, intended to protect persons, property, and the environment on the OCS; and

c. provide any requested documents and records, which are pertinent to occupational or public health, safety, or environmental protection, and allow prompt access, at the site of any operation or activity conducted under this grant, to any inspector authorized by the Grantor or other Federal agency with jurisdiction.

Section 14: Debarment Compliance.

The Grantee must comply with the Department of the Interior's non-procurement debarment and suspension regulations as set forth in 2 C.F.R. Parts 180 and 1400 and must communicate the requirement to comply with these regulations to persons with whom it does business related to this grant by including this requirement in all relevant contracts and transactions.

Section 15: Notices.

All notices or reports provided from one party to the other under the terms of this grant must be in writing, except as provided herein and in the applicable regulations in 30 C.F.R. Part 585. Written notices must be delivered to the parties' Grant Representative, as specifically listed in Addendum "A," either electronically, by hand, by facsimile, or by United States first class mail, adequate postage prepaid. Either party may notify the other of a change of address by doing so in writing. Until notice of any change of address is delivered as provided in this section, the last recorded address of either party will be deemed the address for all notices required under this grant. For all operational matters, notices must

be provided to the parties' Operations Representative, as specifically listed in Addendum "A," as well as the Grant Representative.

Section 16: Severability Clause.

If any provision of this grant is held unenforceable, all remaining provisions of this grant will remain in full force and effect.

Section 17: Substantial Deviation.

Pursuant to the applicable regulations in 30 C.F.R. Part 585, Grantor may cancel this grant if Grantor determines that any cable or pipeline constructed in the granted area substantially deviates from the Grantee's approved GAP.

Section 18: Modification.

Unless otherwise authorized by the applicable regulations in 30 C.F.R. Part 585, this grant may be modified or amended only by mutual agreement of the Grantor and the Grantee. No such modification or amendment shall be binding unless it is in writing and signed by the Grant Representatives of both the Grantor and the Grantee.

_____	The United States of America
Grantee	Grantor
_____	_____
(Signature of Authorized Officer)	(Signature of Authorized Officer)
_____	_____
(Name of Signatory)	(Name of Signatory)
_____	_____
(Title)	(Title)
_____	_____
(Date)	(Date)

U.S. DEPARTMENT OF THE INTERIOR
BUREAU OF OCEAN ENERGY MANAGEMENT

ADDENDUM "A"

DESCRIPTION OF GRANTED AREA AND GRANT ACTIVITIES

Grant Number _____

I. Grantor and Grantee Contact Information

Grantee Company Number: _____

(a) Grantor's Contact Information

	Grant Representative	**Operations Representative**
Name		
Title		
Address		
Phone		
Fax		
Email		

(b) Grantee's Contact Information

	Grant Representative	**Operations Representative**
Name		
Title		
Address		
Phone		
Fax		
Email		

II. Description of Granted Area

III. Description of the Project

U.S. DEPARTMENT OF THE INTERIOR
BUREAU OF OCEAN ENERGY MANAGEMENT

ADDENDUM "B"

GRANT TERM AND FINANCIAL SCHEDULE

Grant Number _____

I. Grant Term

II. Definitions

III. Payments

(a) ***Rent.*** The Grantee must pay rent as described below:

- Grant statute miles: _____
- Additional acres in grant project area: _____
- Annual Rental Rate: $_____ per statute mile or fraction thereof
- Annual Rental Rate: $_____ per acre or fraction thereof
- Rental fee for entire grant project area (using rounded up mileage and acreage): $_____

(b) Reporting, Validation, Audits, and Late Payments

IV. Financial Assurance

The Grantor will determine the amount of financial assurance requirements in accordance with applicable regulations at 30 C.F.R. Part 585. The amount of the financial assurance must be no less than the amount required to meet all grant obligations, including:

- The projected amount of payments due the Grantor over the next 12 months;
- Any past due payments;
- Other monetary obligations; and
- The estimated cost of decommissioning.

(a) Initial Financial Assurance Due Before Grant Issuance Date.

(b) Additional Financial Assurance.

(c) Adjustments to Financial Assurance Amounts.

The Grantor reserves the right to adjust the amount of any financial assurance requirement associated with this grant and/or reassess Grantee's cumulative grant obligations, including decommissioning obligations, pursuant to the applicable regulations in 30 C.F.R. Part 585.

U.S. DEPARTMENT OF THE INTERIOR
BUREAU OF OCEAN ENERGY MANAGEMENT

ADDENDUM "C"[1]

GRANT-SPECIFIC TERMS, CONDITIONS, AND STIPULATIONS

Grant Number _____

The Grantee's rights to conduct activities on the grant area are subject to the following terms, conditions, and stipulations:

The mitigation, monitoring, and reporting requirements listed in this Addendum C are adopted as terms and conditions of the grant. Monitoring results and required reports must be submitted to the Grantor as specified below:

Bureau of Ocean Energy Management
Office of Renewable Energy Programs
381 Elden Street, HM1328
Herndon, Virginia 20170
Phone: 703-787-1300
Fax: 703-787-1708

The Grantor may change this address upon notice to the Grantee in accordance with Section 15 of this grant.

[1] Note: Stipulations are developed on a case-by-case basis relating to location, technology utilized, and other relevant factors, including site-specific findings from project-specific environmental analyses.

[FR Doc. 2012–21275 Filed 8–28–12; 8:45 am]
BILLING CODE 4310–MR–P

DEPARTMENT OF THE INTERIOR

Bureau of Reclamation

Notice of Availability of the Draft Environmental Impact Statement for the Arkansas Valley Conduit and Long-Term Excess Capacity Master Contract, Fryingpan-Arkansas Project; Bent, Chaffee, Crowley, El Paso Pueblo, Fremont, Kiowa, Otero, and Prowers Counties, CO

AGENCY: Bureau of Reclamation, Interior.

ACTION: Notice of availability and public hearings.

SUMMARY: The Bureau of Reclamation has made available for public review and comment the draft environmental impact statement (EIS) for the Arkansas Valley Conduit and Long-Term Excess Capacity Contract, Fryingpan-Arkansas Project, Colorado.

The proposed Arkansas Valley Conduit, conveyance contract for the Pueblo Dam north-south outlet works interconnect, and long-term excess capacity master contract to store water in available space in Pueblo Reservoir would deliver high quality water that would meet Environmental Protection Agency and state water quality requirements and help water providers throughout the Arkansas River Basin in Colorado reliably meet existing and future water demands.

DATES: Submit written comments on the Draft EIS on or before October 30, 2012.

Public hearings will be held on:

1. Monday, September 24, 2012, 6:30 p.m. to 8 p.m., Salida, Colorado.
2. Tuesday, September 25, 2012, 1 p.m. to 2:30 p.m., and 6:30 p.m. to 8 p.m., Pueblo, Colorado.
3. Wednesday, September 26, 2012, 6:30 p.m. to 8 p.m., La Junta, Colorado.
4. Thursday, September 27, 2012, 6:30 p.m. to 8 p.m., Lamar, Colorado.

ADDRESSES: Submit written comments on the Draft EIS to Ms. J. Signe Snortland, Bureau of Reclamation, P.O. Box 1017, Bismarck, North Dakota 58502; or by email to *jsnortland@usbr.gov.*

The public hearings will be held at:

1. Salida—Salida Community Center, 305 F Street, Salida, Colorado 81201.
2. Pueblo—Pueblo Convention Center, 320 Central Main St., Pueblo, Colorado 81003.
3. Otero—Otero Junior College, 2222 San Juan Ave., La Junta, Colorado 81050.
4. Lamar—Lamar Community Building, 610 South 6th Street, Lamar, Colorado 81052.

To request an Executive Summary and DVD of the Draft EIS, please contact J. Signe Snortland as indicated above, or call 701–221–1278. The Draft EIS may be viewed or downloaded at the Bureau of Reclamation's Web site at *http://www.usbr.gov/avceis.* See Supplementary Information section for locations where copies of the Draft EIS are available for public review.

FOR FURTHER INFORMATION CONTACT: J. Signe Snortland, Environmental Specialist at *jsnortland@usbr.gov.*

SUPPLEMENTARY INFORMATION:

Three proposed federal actions by the Bureau of Reclamation are analyzed in the Draft EIS: (1) Construct and operate the Arkansas Valley Conduit (AVC) and enter into a repayment contract with Southeastern Colorado Water Conservancy District; (2) enter into a conveyance contract with various water providers for use of a pipeline interconnection between Pueblo Dam's south and north outlet works; and (3) enter into a excess capacity master contract with Southeastern Colorado Water Conservancy District to store water in Pueblo Reservoir. While serving similar water supply and delivery purposes, the proposed actions are independent of each other.

The AVC was authorized by Congress in the original Fryingpan-Arkansas legislation in 1962 (Pub. L. 87–590). However, it was not constructed with the original project, primarily because of the beneficiaries' inability to repay the construction costs. In 2009, Congress amended the original legislation in Public Law 111–11, which authorized annual federal funding as necessary for constructing AVC, and included a cost sharing plan with 65 percent federal and 35 percent local funding. The Bureau of Reclamation would enter into a 50-year repayment contract with Southeastern Colorado Water Conservancy District which would be responsible for paying the local share.

The AVC would be a water supply pipeline to help meet existing and future municipal and industrial water demands of southeastern Colorado water providers. Forty towns and rural domestic water supply systems in Pueblo, Crowley, Otero, Bent, Prowers, and Kiowa counties would participate in the AVC. Water providers are requesting annual water deliveries of 10,256 acre-feet to help meet 2070 water demands. Fourteen of these water providers are currently under orders by the Colorado Department of Public Health and Environment to remove naturally-occurring radioactive contaminants from their surface or groundwater source using expensive treatment or to find another better quality water source.

The interconnection would move water between the existing south outlet works and future north outlet works (currently under construction as part of the Southern Deliver System) at Pueblo Reservoir during emergencies or periodic maintenance activities. Interconnect operations would require a long-term (40-year) contract between AVC, Pueblo Fish Hatchery, Board of Water Works of Pueblo, Pueblo West, Southern Delivery System, and Fountain Valley Authority.

The purpose of the excess capacity master contract would be to allow use of extra storage space in Pueblo Reservoir to store up to 29,938 acre-feet of water. A long-term storage contract, rather than short-term contracts, is needed by 37 water providers to help meet projected demand through 2060 (the term of the contract).

Some of the resources potentially affected by the proposed actions that are evaluated in the Draft EIS include: surface water quantity and quality in the Arkansas River and Fryingpan-Arkansas reservoirs, groundwater, climate change, recreation biological resources, human environment, socioeconomics, environmental justice, and historic properties.

Hearing Process and Distribution Information

Requests to make oral comments at the public hearing may be made at the hearing. In order to ensure that all those interested in providing oral comments have an opportunity to do so, oral comments at the hearing will be limited to five minutes. Comments will be recorded by a court reporter. Speakers will be called in the order indicated on the sign in list for speaking. Speakers not present when called will be recalled at the end of the scheduled speakers. Speakers may provide written versions of their oral comments or other additional written comments for the hearing record. Longer comments should be summarized at the public hearing and submitted in writing either at the public hearing or identified as hearing comments and mailed within seven days of the hearing date to J. Signe Snortland as indicated under the Addresses section.

Copies of the Draft EIS are available for public review at the following locations:

- Bureau of Reclamation, Eastern Colorado Area Office, 11056 West

County Road 18E, Loveland, Colorado 80537

- Bureau of Reclamation, Great Plains Regional Office, 316 North 26th Street, Billings, Montana 59101
- Carnegie Library—Cañon City, 516 Macon Avenue, Cañon City, Colorado 81212
- Pueblo City-County Library District, 100 E. Abriendo Avenue, Pueblo, Colorado 81004
- Pikes Peak Library District, 5550 North Union Boulevard, Colorado Springs, Colorado 80918
- Pueblo West Public Library, 298 South Joe Martinez Boulevard, Pueblo, Colorado 81007
- Frank & Marie Barkman Library, 1300 Jerry Murphy Road, Pueblo, Colorado 81001
- Pueblo City-County Library District—Lamb Branch, 2525 South Pueblo Boulevard, Pueblo, Colorado 81005
- Salida Regional Library, 405 East Street, Salida, Colorado 81201
- John C. Fremont Library District, 130 Church Ave., Florence, Colorado 81226
- Fountain Branch Library, 230 S. Main St., Fountain, Colorado 80817
- Fowler Public Library, 400 6th Ave., Fowler, Colorado 81039
- La Junta-Woodruff Memorial Library, 522 Colorado Ave., La Junta, Colorado 81050
- Lamar Public Library, 102 E. Parmenter St., Lamar, Colorado 81052
- Las Animas-Bent County Library District, 306 Fifth St., Las Animas, Colorado 81054
- Manzanola School-Public Library, 301 Catalpa, Manzanola, Colorado 81058
- Rocky Ford Public Library, 400 S. 10th St., Rocky Ford, Colorado 81067
- Security Public Library, 715 Aspen Drive, Colorado Springs, Colorado 80911
- Swink School-Public Library, 610 Columbia Ave., Swink, Colorado 81077
- Trimble Library, 1111 Academy Park Loop, Colorado Springs, Colorado 80910

Public Disclosure Statement

Before including your address, phone number, email address, or other personal identifying information in your comment, you should be aware that your entire comment—including your personal identifying information—may be made publicly available at any time. While you may ask us in your comment to withhold your personal identifying information from public review, we cannot guarantee that we will be able to do so.

Dated: August 22, 2012.

Gary W. Campbell,

Deputy Regional Director, Great Plains Region.

[FR Doc. 2012–21328 Filed 8–28–12; 8:45 am]

BILLING CODE 4310–MN–P

DEPARTMENT OF JUSTICE

Drug Enforcement Administration

Importer of Controlled Substances; Notice of Registration

By Notice dated June 4, 2012, and published in the **Federal Register** on June 12, 2012, 77 FR 35020, Arizona Department of Corrections, ASPC-Florence, 1305 E. Butte Avenue, Florence, Arizona 85132, made application to the Drug Enforcement Administration (DEA) to be registered as an importer of Pentobarbital (2270), a basic class of controlled substance listed in schedule II.

The facility intends to import the above listed controlled substance for legitimate use. Supplies of this particular controlled substance are inadequate and are not available in the form needed within the current domestic supply of the United States.

No comments or objections have been received. DEA has considered the factors in 21 U.S.C. 823(a) and 952(a) and determined that the registration of Arizona Department of Corrections to import the basic class of controlled substance is consistent with the public interest and with United States obligations under international treaties, conventions, or protocols in effect on May 1, 1971.

DEA has investigated Arizona Department of Corrections, ASPC-Florence to ensure that its registration is consistent with the public interest. The investigation has included inspection and testing of the Arizona Department of Corrections, ASPC-Florence facility's physical security systems, verification of its compliance with state and local laws, and a review of its background and history.

Therefore, pursuant to 21 U.S.C. 952(a) and 958(a), and in accordance with 21 CFR § 1301.34, the above named company is granted registration as an importer of the basic class of controlled substance listed.

Dated: August 17, 2012.

Joseph T. Rannazzisi,

Deputy Assistant Administrator, Office of Diversion Control, Drug Enforcement Administration.

[FR Doc. 2012–21278 Filed 8–28–12; 8:45 am]

BILLING CODE 4410–09–P

DEPARTMENT OF JUSTICE

Drug Enforcement Administration

Manufacturer of Controlled Substances; Notice of Application; Cerilliant Corporation

Pursuant to § 1301.33(a), Title 21 of the Code of Federal Regulations (CFR), this is notice that on July 16, 2012, Cerilliant Corporation, 811 Paloma Drive, Suite A, Round Rock, Texas 78665–2402, made application by renewal to the Drug Enforcement Administration (DEA) to be registered as a bulk manufacturer of the following basic classes of controlled substances:

Drug	Schedule
Cathinone (1235)	I
Methcathinone (1237)	I
4-Methyl-N-methylcathinone (1248).	I
N-Ethylamphetamine (1475)	I
N,N-Dimethylamphetamine (1480)	I
Fenethylline (1503)	I
Aminorex (1585)	I
4-Methylaminorex (cis Isomer) (1590).	I
Gamma Hydroxybutyric Acid (2010).	I
Methaqualone (2565)	I
1-Pentyl-3-(1-naphthoyl)indole (7118).	I
1-Butyl-3-(1-naphthoyl)indole (7173).	I
1-[2-(4-Morpholinyl)ethyl]-3-(1-naphthoyl) indole (7200).	I
Alpha-ethyltryptamine (7249)	I
5-(1,1-Dimethylheptyl)-2-[(1R,3S)-3-hydroxycyclohexyl-phenol] (7297).	I
5-(1,1-Dimethyloctyl)-2-[(1R,3S)3-hydroxycyclohexyl-phenol] (7298).	I
Lysergic acid diethylamide (7315)	I
2,5-Dimethoxy-4-(n)-propylthiophenethylamine (7348).	I
Marihuana (7360)	I
Tetrahydrocannabinols (7370)	I
Parahexyl (7374)	I
Mescaline (7381)	I
3,4,5-Trimethoxyamphetamine (7390).	I
4-Bromo-2,5-dimethoxyamphetamine (7391).	I
4-Bromo-2,5-dimethoxyphenethylamine (7392).	I
4-Methyl-2,5-dimethoxyamphetamine (7395).	I
2,5-Dimethoxyamphetamine (7396).	I
2,5-Dimethoxy-4-ethylamphetamine (7399).	I
3,4-Methylenedioxyamphetamine (7400).	I
5-Methoxy-3,4-methylenedioxyamphetamine (7401).	I

Drug	Schedule
N-Hydroxy-3,4-methylendioxyamphetamine (7402).	I
3,4-Methylendioxy-N-ethylamphetamine (7404).	I
3,4-Methylenedioxymethamphetamine (7405).	I
4-Methoxyamphetamine (7411)	I
5-Methoxy-N-N-dimethyltryptamine (7431).	I
Alpha-methyltryptamine (7432)	I
Bufotenine (7433)	I
Diethyltryptamine (7434)	I
Dimethyltryptamine (7435)	I
Psilocybin (7437)	I
Psilocyn (7438)	I
5-Methoxy-N,N-diisopropyltryptamine (7439).	I
N-Ethyl-1-phenylcyclohexylamine (7455).	I
1-(1-Phenylcyclohexyl)pyrrolidine (7458).	I
1-[1-(2-Thienyl)cyclohexyl]piperidine (7470).	I
N-Benzylpiperazine (7493)	I
Acetyldihydrocodeine (9051)	I
Benzylmorphine (9052)	I
Codeine-N-oxide (9053)	I
Codeine methylbromide (9070)	I
Dihydromorphine (9145)	I
Heroin (9200)	I
Hydromorphinol (9301)	I
Methyldesorphine (9302)	I
Methyldihydromorphine (9304)	I
Morphine methylbromide (9305)	I
Morphine methylsulfonate (9306)	I
Morphine-N-oxide (9307)	I
Normorphine (9313)	I
Pholcodine (9314)	I
Acetylmethadol (9601)	I
Allylprodine (9602)	I
Alphacetylmethadol except levo-alphacetylmethadol (9603).	I
Alphameprodine (9604)	I
Alphamethadol (9605)	I
Betacetylmethadol (9607)	I
Betameprodine (9608)	I
Betamethadol (9609)	I
Betaprodine (9611)	I
Dipipanone (9622)	I
Hydroxypethidine (9627)	I
Noracymethadol (9633)	I
Norlevorphanol (9634)	I
Normethadone (9635)	I
Trimeperidine (9646)	I
Phenomorphan (9647)	I
1-Methyl-4-phenyl-4-propionoxypiperidine (9661).	I
Tilidine (9750)	I
Para-Fluorofentanyl (9812)	I
3-Methylfentanyl (9813)	I
Alpha-Methylfentanyl (9814)	I
Acetyl-alpha-methylfentanyl (9815).	I
Beta-hydroxyfentanyl (9830)	I
Beta-hydroxy-3-methylfentanyl (9831).	I
Alpha-methylthiofentanyl (9832)	I
3-Methylthiofentanyl (9833)	I
Thiofentanyl (9835)	I
Amphetamine (1100)	II
Methamphetamine (1105)	II
Lisdexamfetamine (1205)	II
Phenmetrazine (1631)	II
Methylphenidate (1724)	II
Amobarbital (2125)	II
Pentobarbital (2270)	II
Secobarbital (2315)	II
Glutethimide (2550)	II
Nabilone (7379)	II
1-Phenylcyclohexylamine (7460)	II
Phencyclidine (7471)	II
1-Piperidinocyclohexanecarbonitrile (8603).	II
Alphaprodine (9010)	II
Cocaine (9041)	II
Codeine (9050)	II
Dihydrocodeine (9120)	II
Oxycodone (9143)	II
Hydromorphone (9150)	II
Diphenoxylate (9170)	II
Benzoylecgonine (9180)	II
Ethylmorphine (9190)	II
Hydrocodone (9193)	II
Levomethorphan (9210)	II
Levorphanol (9220)	II
Isomethadone (9226)	II
Meperidine (9230)	II
Meperidine Intermediate-A (9232)	II
Meperidine Intermediate-B (9233)	II
Meperidine Intermediate-C (9234)	II
Metazocine (9240)	II
Methadone (9250)	II
Methadone Intermediate (9254)	II
Dextropropoxyphene, bulk (non-dosage forms) (9273).	II
Morphine (9300)	II
Thebaine (9333)	II
Levo-alphacetylmethadol (9648)	II
Oxymorphone (9652)	II
Noroxymorphone (9668)	II
Racemethorphan (9732)	II
Alfentanil (9737)	II
Remifentanil (9739)	II
Sufentanil (9740)	II
Carfentanil (9743)	II
Tapentadol (9780)	II
Fentanyl (9801)	II

The company plans to manufacture small quantities of the listed controlled substances to make reference standards which will be distributed to their customers.

Any other such applicant, and any person who is presently registered with DEA to manufacture such substances, may file comments or objections to the issuance of the proposed registration pursuant to 21 CFR § 1301.33(a).

Any such written comments or objections should be addressed, in quintuplicate, to the Drug Enforcement Administration, Office of Diversion Control, **Federal Register** Representative (ODL), 8701 Morrissette Drive, Springfield, Virginia 22152; and must be filed no later than October 29, 2012.

Dated: August 17, 2012.

Joseph T. Rannazzisi,

Deputy Assistant Administrator, Office of Diversion Control, Drug Enforcement Administration.

[FR Doc. 2012–21276 Filed 8–28–12; 8:45 am]

BILLING CODE 4410–09–P

DEPARTMENT OF JUSTICE

Drug Enforcement Administration

Manufacturer of Controlled Substances; Notice of Application; Euticals Inc.

Pursuant to § 1301.33(a), Title 21 of the Code of Federal Regulations (CFR), this is notice that on June 7, 2012, Euticals Inc.,(formerly known as Archimica, Inc.) 2460 W. Bennett Street, Springfield, Missouri 65807–1229, made application by renewal to the Drug Enforcement Administration (DEA) to be registered as a bulk manufacturer of the following basic classes of controlled substances:

Drug	Schedule
Gamma Hydroxybutyric Acid (2010).	I
Amphetamine (1100)	II
Lisdexamfetamine (1205)	II
Methylphenidate (1724)	II
Phenylacetone (8501)	II
Methadone Intermediate (9254)	II
Tapentadol (9780)	II

The company plans to manufacture the listed controlled substances in bulk for distribution and sale to its customers.

With regards to Amphetamine (1100), the company plans to acquire the listed controlled substance in bulk from a domestic source in order to manufacture other controlled substances in bulk for distribution to its customers.

Any other such applicant, and any person who is presently registered with DEA to manufacture such substances, may file comments or objections to the issuance of the proposed registration pursuant to 21 CFR 1301.33(a).

Any such written comments or objections should be addressed, in quintuplicate, to the Drug Enforcement Administration, Office of Diversion Control, **Federal Register** Representative (ODL), 8701 Morrissette Drive, Springfield, Virginia 22152; and must be filed no later than October 29, 2012.

Dated: August 17, 2012.

Joseph T. Rannazzisi,

Deputy Assistant Administrator, Office of Diversion Control, Drug Enforcement Administration.

[FR Doc. 2012–21280 Filed 8–28–12; 8:45 am]

BILLING CODE 4410–09–P

DEPARTMENT OF JUSTICE

Drug Enforcement Administration

Manufacturer of Controlled Substances; Notice of Registration; Austin Pharma, LLC.

By Notice dated May 9, 2012, and published in the **Federal Register** on May 21, 2012, 77 FR 30027, Austin Pharma LLC., 811 Paloma Drive, Suite C, Round Rock, Texas 78665–2402, made application by renewal to the Drug Enforcement Administration (DEA) to be registered as a bulk manufacturer of the following basic classes of controlled substances:

Drug	Schedule
Marihuana (7360)	I
Tetrahydrocannabinols (7370)	I

The company plans to manufacture bulk active pharmaceutical ingredients (APIs) for distribution to its customers.

In reference to drug code 7360 (Marihuana), the company plans to bulk manufacture cannabidiol as a synthetic intermediate. This controlled substance will be further synthesized to bulk manufacture a synthetic THC (7370). No other activity for this drug code is authorized for this registration.

No comments or objections have been received. DEA has considered the factors in 21 U.S.C. 823(a) and determined that the registration of Austin Pharma LLC., to manufacture the listed basic classes of controlled substances is consistent with the public interest at this time. DEA has investigated Austin Pharma LLC., to ensure that the company's registration is consistent with the public interest. The investigation has included inspection and testing of the company's physical security systems, verification of the company's compliance with state and local laws, and a review of the company's background and history. Therefore, pursuant to 21 U.S.C. 823, and in accordance with 21 CFR § 1301.33, the above named company is granted registration as a bulk manufacturer of the basic classes of controlled substances listed.

Dated: August 17, 2012.

Joseph T. Rannazzisi,

Deputy Assistant Administrator, Office of Diversion Control, Drug Enforcement Administration.

[FR Doc. 2012–21283 Filed 8–28–12; 8:45 am]

BILLING CODE 4410–09–P

DEPARTMENT OF JUSTICE

Drug Enforcement Administration

Manufacturer of Controlled Substances; Notice of Registration; Agilent Technologies

By Notice dated May 11, 2012, and published in the **Federal Register** on May 21, 2012, 77 FR 30025, Agilent Technologies, 25200 Commercentre Drive, Lake Forest, California 92630–8810, made application by renewal to the Drug Enforcement Administration (DEA) to be registered as a bulk manufacturer of the following basic classes of controlled substances:

Drug	Schedule
Phencyclidine (7471)	II
1-piperidinocyclohexanecarbonitrile (8603).	II
Benzoylecgonine (9180)	II

The company plans to manufacture small quantities of the listed controlled substances for use in diagnostic products.

No comments or objections have been received. DEA has considered the factors in 21 U.S.C. 823(a) and determined that the registration of Agilent Technologies to manufacture the listed basic classes of controlled substances is consistent with the public interest at this time. DEA has investigated Agilent Technologies to ensure that the company's registration is consistent with the public interest. The investigation has included inspection and testing of the company's physical security systems, verification of the company's compliance with state and local laws, and a review of the company's background and history. Therefore, pursuant to 21 U.S.C. 823(a), and in accordance with 21 CFR § 1301.33, the above named company is granted registration as a bulk manufacturer of the basic classes of controlled substances listed.

Dated: August 17, 2012.

Joseph T. Rannazzisi,

Deputy Assistant Administrator, Office of Diversion Control, Drug Enforcement Administration.

[FR Doc. 2012–21282 Filed 8–28–12; 8:45 am]

BILLING CODE 4410–09–P

DEPARTMENT OF JUSTICE

Drug Enforcement Administration

Manufacturer of Controlled Substances; Notice of Registration; American Radiolabeled Chemicals, Inc.

By Notice dated May 9, 2012, and published in the **Federal Register** on May 21, 2012, 77 FR 30027, American Radiolabeled Chemicals, INC., 101 Arc Drive, St. Louis, Missouri 63146, made application by renewal to the Drug Enforcement Administration (DEA) to be registered as a bulk manufacturer of the following basic classes of controlled substances:

Drug	Schedule
Gamma Hydroxybutyric Acid (2010).	I
Ibogaine (7260)	I
Lysergic acid diethylamide (7315)	I
Tetrahydrocannabinols (7370)	I
Dimethyltryptamine (7435)	I
1-[1-(2-Thienyl)cyclohexyl]piperidine (7470).	I
Dihydromorphine (9145)	I
Normorphine (9313)	I
Heroin (9200)	I
Amphetamine (1100)	II
Methamphetamine (1105)	II
Amobarbital (2125)	II
Phencyclidine (7471)	II
Phenylacetone (8501)	II
Cocaine (9041)	II
Codeine (9050)	II
Dihydrocodeine (9120)	II
Oxycodone (9143)	II
Hydromorphone (9150)	II
Ecgonine (9180)	II
Hydrocodone (9193)	II
Meperidine (9230)	II
Metazocine (9240)	II
Dextropropoxyphene, bulk (non-dosage forms) (9273).	II
Morphine (9300)	II
Oripavine (9330)	II
Thebaine (9333)	II
Oxymorphone (9652)	II
Phenazocine (9715)	II
Carfentanil (9743)	II
Fentanyl (9801)	II

The company plans to manufacture small quantities of the listed controlled substances as radiolabeled compounds for biochemical research.

No comments or objections have been received. DEA has considered the factors in 21 U.S.C. 823(a) and determined that the registration of American Radiolabeled Chemicals, INC., to manufacture the listed basic classes of controlled substances is consistent with the public interest at this time. DEA has investigated American Radiolabeled Chemicals INC., to ensure that the company's registration is consistent with the public

interest. The investigation has included inspection and testing of the company's physical security systems, verification of the company's compliance with state and local laws, and a review of the company's background and history. Therefore, pursuant to 21 U.S.C. 823(a), and in accordance with 21 CFR § 1301.33, the above named company is granted registration as a bulk manufacturer of the basic classes of controlled substances listed.

Dated: August 17, 2012.

Joseph T. Rannazzisi,

Deputy Assistant Administrator, Office of Diversion Control, Drug Enforcement Administration.

[FR Doc. 2012–21281 Filed 8–28–12; 8:45 am]

BILLING CODE 4410–09–P

DEPARTMENT OF JUSTICE

Drug Enforcement Administration

Manufacturer of Controlled Substances; Notice of Registration; Stepan Company

By Notice dated May 11, 2012, and published in the **Federal Register** on May 21, 2012, 77 FR 30026, Stepan Company, Natural Products Dept., 100 W. Hunter Avenue, Maywood, New Jersey 07607, made application by renewal to the Drug Enforcement Administration (DEA) to be registered as a bulk manufacturer of the following basic classes of controlled substances:

Drug	Schedule
Cocaine (9041) II	II
Ecgonine (9180) II	II

The company plans to manufacture the listed controlled substances in bulk for distribution to its customers.

No comments or objections have been received. DEA has considered the factors in 21 U.S.C. 823(a), and determined that the registration of Stepan Company to manufacture the listed basic classes of controlled substances is consistent with the public interest at this time.

DEA has investigated Stepan Company to ensure that the company's registration is consistent with the public interest. The investigation has included inspection and testing of the company's physical security systems, verification of the company's compliance with state and local laws, and a review of the company's background and history.

Therefore, pursuant to 21 U.S.C. 823(a), and in accordance with 21 CFR § 1301.33, the above named company is granted registration as a bulk manufacturer of the basic classes of controlled substances listed.

Dated: August 17, 2012.

Joseph T. Rannazzisi,

Deputy Assistant Administrator, Office of Diversion Control, Drug Enforcement Administration.

[FR Doc. 2012–21279 Filed 8–28–12; 8:45 am]

BILLING CODE 4410–09–P

DEPARTMENT OF JUSTICE

Office of Justice Programs

[OMB Number 1121–0259]

Agency Information Collection Activities; Proposed Collection; Comments Requested: Bureau of Justice Assistance Application Form: Public Safety Officer's Medal of Valor

ACTION: 60-Day Notice of Information Collection Under Review.

The Department of Justice (DOJ), Office of Justice Programs (OJP), will be submitting the following information collection request to the Office of Management and Budget (OMB) for review and approval in accordance with the Paperwork Reduction Act of 1995. The proposed information collection is published to obtain comments from the public and affected agencies. Comments are encouraged and will be accepted for ''sixty days'' until October 29, 2012. This process is conducted in accordance with 5 CFR 1320.10.

If you have comments especially on the estimated public burden or associated response time, suggestions, or need a copy of the proposed information collection instrument with instructions or additional information, please contact Maria A. Berry, Senior Advisor by email at *M.A.Berry@ojp.usdoj.gov* or by telephone at 202–353–8643, Bureau of Justice Assistance, Office of Justice Programs, U.S. Department of Justice, 810 Seventh Street NW., Washington, DC 20531.

Written comments and suggestions from the public and affected agencies concerning the proposed collection of information are encouraged. Your comments should address one or more of the following four points:

—Evaluate whether the proposed collection of information is necessary for the proper performance of the functions of the agency, including whether the information will have practical utility;

—Evaluate the accuracy of the agency's estimate of the burden of the proposed collection of information, including the validity of the methodology and assumptions used;

—Enhance the quality, utility, and clarity of the information to be collected; and

—Minimize the burden of the collection of information on those who are to respond, including through the use of appropriate automated, electronic, mechanical, or other technological collection techniques or other forms of information technology, e.g., permitting electronic submission of responses.

Overview of This Information Collection

(1) *Type of Information Collection:* Extension of a currently approved collection.

(2) *Title of the Form/Collection:* Bureau of Justice Assistance Application Form: Public Safety Officers Medal of Valor.

(3) *Agency form number, if any, and the applicable component of the Department of Justice sponsoring the collection: Form Number:* None.

(4) *Affected public who will be asked or required to respond, as well as a brief Abstract: Primary:* State, local and tribal government agencies within the United States and its territories.

Abstract: The Bureau of Justice Assistance, a component of the Office of Justice Program, Department of Justice, administers the Public Safety Officer's Medal of Valor. Once a year, the President of the United States of America may award, and present in the name of Congress, a Medal of Valor of appropriate design, with ribbons and appurtenances, to a public safety officer who is cited by the Attorney General, upon the recommendation of the Medal of Valor Review Board, for extraordinary valor above and beyond the call of duty. The Public Safety Officer Medal of Valor is the highest national award given to a public safety officer in recognition of their bravery and altruistic acts of valor to protect and save the lives of others. Nomination(s) for this award is voluntary.

Nominations are received through the Internet, or postal mail. The Medal of Valor program is governed by F1.R.802, the ''Public Safety Officer Medal of Valor Act of 2001.

(5) *An estimate of the total number of respondents and the amount of time estimated for an average respondent to respond/reply:* It is estimated that it will take the 225 applicants under the Medal of Valor approximately 25 minutes to complete the application form.

(6) An estimate of the total public burden (in hours) associated with the Collection. The total estimated annual

hour burden to complete the application/nomination form is 93.75 hours.

If additional information is required contact: Jerri Murray, Department Clearance Officer, U.S.Department of Justice, Justice Management Division, Policy and Planning Staff, Two Constitution Square, 145 N Street NE., Room 2E–508, Washington, DC 20530.

Dated: August 23, 2012.

Jerri Murray,

Department Clearance Officer, PRA, Department of Justice.

[FR Doc. 2012–21210 Filed 8–28–12; 8:45 am]

BILLING CODE 4410–18–P

DEPARTMENT OF LABOR

Office of the Secretary

Agency Information Collection Activities; Submission for OMB Review; Comment Request; International Price Program U.S. Export and Import Price Indexes

ACTION: Notice.

SUMMARY: The Department of Labor (DOL) is submitting the Bureau of Labor Statistics (BLS) sponsored information collection request (ICR) titled, ''International Price Program U.S. Export and Import Price Indexes to the Office of Management and Budget (OMB) for review and approval for continued use in accordance with the Paperwork Reduction Act (PRA) of 1995 (44 U.S.C. 3501 et seq.).

DATES: Submit comments on or before September 28, 2012.

ADDRESSES: A copy of this ICR with applicable supporting documentation; including a description of the likely respondents, proposed frequency of response, and estimated total burden may be obtained from the RegInfo.gov Web site, *http://www.reginfo.gov/public/do/PRAMain,* on the day following publication of this notice or by contacting Michel Smyth by telephone at 202–693–4129 (this is not a toll-free number) or sending an email to *DOL_PRA_PUBLIC@dol.gov.*

Submit comments about this request to the Office of Information and Regulatory Affairs, Attn: OMB Desk Officer for DOL–BLS, Office of Management and Budget, Room 10235, 725 17th Street, NW., Washington, DC 20503, Telephone: 202–395–3093/Fax: 202–395–6881 (these are not toll-free numbers), email: *OIRA_submission@omb.eop.gov.*

FOR FURTHER INFORMATION CONTACT: Michel Smyth by telephone at 202–693–4129 (this is not a toll-free number) or by email at *DOL_PRA_PUBLIC@dol.gov.*

Authority: 44 U.S.C. 3507(a)(1)(D).

SUPPLEMENTARY INFORMATION: Price data collected by the International Price Program is used to produce indexes that measure, on a monthly basis, changes in transaction prices of goods and services exported from or imported into the U.S. This published data is, in turn, used to deflate import and export trade statistics, deflate the foreign trade component of the Gross Domestic Product, determine monetary and fiscal policy, negotiate trade agreements, and determine trade and commercial policy. The respondents are establishments conducting import/export trade. They receive no compensation for their voluntary participation.

This information collection is subject to the PRA. A Federal agency generally cannot conduct or sponsor a collection of information, and the public is generally not required to respond to an information collection, unless it is approved by the OMB under the PRA and displays a currently valid OMB Control Number. In addition, notwithstanding any other provisions of law, no person shall generally be subject to penalty for failing to comply with a collection of information if the collection of information does not display a valid Control Number. *See* 5 CFR 1320.5(a) and 1320.6. The DOL obtains OMB approval for this information collection under Control Number 1220–0025. The current approval is scheduled to expire on October 31, 2012; however, it should be noted that existing information collection requirements submitted to the OMB receive a month-to-month extension while they undergo review. For additional information, see the related notice published in the **Federal Register** on May 11, 2012 (77 FR 27799).

Interested parties are encouraged to send comments to the OMB, Office of Information and Regulatory Affairs at the address shown in the **ADDRESSES** section within 30 days of publication of this notice in the **Federal Register**. In order to help ensure appropriate consideration, comments should mention OMB Control Number 1220–0025. The OMB is particularly interested in comments that:

- Evaluate whether the proposed collection of information is necessary for the proper performance of the functions of the agency, including whether the information will have practical utility;
- Evaluate the accuracy of the agency's estimate of the burden of the proposed collection of information, including the validity of the methodology and assumptions used;
- Enhance the quality, utility, and clarity of the information to be collected; and
- Minimize the burden of the collection of information on those who are to respond, including through the use of appropriate automated, electronic, mechanical, or other technological collection techniques or other forms of information technology, e.g., permitting electronic submission of responses.

Agency: DOL–BLS.

Title of Collection: International Price Program U.S. Export and Import Price Indexes.

OMB Control Number: 1220–0025.

Affected Public: Private Sector—Businesses or other for-profits.

Total Estimated Number of Respondents: 8,500.

Total Estimated Number of Responses: 47,660.

Total Estimated Annual Burden Hours: 20,748.

Total Estimated Annual Other Costs Burden: $0.

Dated: August 24, 2012.

Michel Smyth,

Departmental Clearance Officer.

[FR Doc. 2012–21303 Filed 8–28–12; 8:45 a.m.]

BILLING CODE 4510–24–P

DEPARTMENT OF LABOR

Office of Workers' Compensation Programs

Proposed Extension of Existing Collection; Comment Request

ACTION: Notice.

SUMMARY: The Department of Labor, as part of its continuing effort to reduce paperwork and respondent burden, conducts a preclearance consultation program to provide the general public and Federal agencies with an opportunity to comment on proposed and/or continuing collections of information in accordance with the Paperwork Reduction Act of 1995 (PRA95) [44 U.S.C. 3506(c)(2)(A)]. This program helps to ensure that requested data can be provided in the desired format, reporting burden (time and financial resources) is minimized, collection instruments are clearly understood, and the impact of collection requirements on respondents can be properly assessed. Currently, the Division of Longshore and Harbor Workers' Compensation is soliciting comments concerning the proposed collection: Carrier's Report of Issuance

of Policy (LS–570). A copy of the proposed information collection request can be obtained by contacting the office listed below in the **ADDRESSES** section of this Notice.

DATES: Written comments must be submitted to the office listed in the **ADDRESSES** section below on or before October 29, 2012.

ADDRESSES: Ms. Yoon Ferguson, U.S. Department of Labor, 200 Constitution Ave. NW., Room S–3201, Washington, DC 20210, telephone (202) 693–0701, fax (202) 693–2447, Email f*erguson.yoon@dol.gov*. Please use only one method of transmission for comments (mail, fax, or Email).

SUPPLEMENTARY INFORMATION:

I. Background: The form LS–570 is completed by the insurance carrier and forwarded to the Department of Labor for review. The Longshore and Harbor Workers' Compensation staff review the completed LS–570 to identify those operators who have secured insurance for payment of Longshore benefits as required by *20 CFR 703.116.* This feedback will help DOL improve the quality and delivery of compliance assistance tools and services. This clearance allows Longshore to gather information from both Federal and non-Federal users. This information collection is currently approved for use through December 31, 2012.

II. Review Focus: The Department of Labor is particularly interested in comments which:

* Evaluate whether the proposed collection of information is necessary for the proper performance of the functions of the agency, including whether the information will have practical utility;

* Evaluate the accuracy of the agency's estimate of the burden of the proposed collection of information, including the validity of the methodology and assumptions used;

* Enhance the quality, utility and clarity of the information to be collected; and

* Minimize the burden of the collection of information on those who are to respond, including through the use of appropriate automated, electronic, mechanical, or other technological collection techniques or other forms of information technology, e.g., permitting electronic submissions of responses.

III. Current Actions: The Department of Labor seeks the approval of the extension of this currently approved information collection. The information is necessary (i) to ensure compliance by employers, (ii) to bind the carrier to the liabilities of the employer under 20 CFR 703.118 and (iii) so that the districts can identify the correct carrier for claims to ensure prompt payment of compensation to injured workers.

Type of Review: Extension.

Agency: Division of Longshore and Harbor Workers' Compensation.

Title: Carrier's Report of Issuance of Policy.

OMB Number: 1240–0004.

Agency Number: LS–570.

Affected Public: Private Sector Business or other for-profits.

Total Respondents: 360.

Total Responses: 5,000.

Time per Response: 1 minute.

Estimated Total Burden Hours: 83.

Total Burden Cost (Capital/Startup): $0.

Total Burden Cost (Operating/Maintenance): $2,650.

Comments submitted in response to this notice will be summarized and/or included in the request for Office of Management and Budget approval of the information collection request; they will also become a matter of public record.

Dated: August 23, 2012.

Yoon Ferguson,

Agency Clearance Officer, Office of Workers' Compensation Programs, U.S. Department of Labor.

[FR Doc. 2012–21271 Filed 8–28–12; 8:45 am]

BILLING CODE 4510–CF–P

NUCLEAR REGULATORY COMMISSION

Advisory Committee On Reactor Safeguards (ACRS); Meeting of the ACRS Subcommittee on Planning and Procedures; Notice of Meeting

The ACRS Subcommittee on Planning and Procedures will hold a meeting on September 5, 2012, Room T–2B3, 11545 Rockville Pike, Rockville, Maryland.

The entire meeting will be open to public attendance, with the exception of a portion that may be closed pursuant to 5 U.S.C. 552b (c)(2) and (6) to discuss organizational and personnel matters that relate solely to the internal personnel rules and practices of the ACRS, and information the release of which would constitute a clearly unwarranted invasion of personal privacy.

The agenda for the subject meeting shall be as follows:

Wednesday, September 5, 2012—12:00 p.m. Until 1:00 p.m.

The Subcommittee will discuss proposed ACRS activities and related matters. The Subcommittee will gather information, analyze relevant issues and facts, and formulate proposed positions and actions, as appropriate, for deliberation by the Full Committee.

Members of the public desiring to provide oral statements and/or written comments should notify the Designated Federal Official (DFO), Antonio Dias (Telephone 301–415–6805 or Email: *Antonio.Dias@nrc.gov*) five days prior to the meeting, if possible, so that arrangements can be made. Thirty-five hard copies of each presentation or handout should be provided to the DFO thirty minutes before the meeting. In addition, one electronic copy of each presentation should be emailed to the DFO one day before the meeting. If an electronic copy cannot be provided within this timeframe, presenters should provide the DFO with a CD containing each presentation at least thirty minutes before the meeting. Electronic recordings will be permitted only during those portions of the meeting that are open to the public. Detailed procedures for the conduct of and participation in ACRS meetings were published in the **Federal Register** on October 17, 2011, (76 FR 64126–64127).

Information regarding changes to the agenda, whether the meeting has been canceled or rescheduled, and the time allotted to present oral statements can be obtained by contacting the identified DFO. Moreover, in view of the possibility that the schedule for ACRS meetings may be adjusted by the Chairman as necessary to facilitate the conduct of the meeting, persons planning to attend should check with the DFO if such rescheduling would result in a major inconvenience.

If attending this meeting, please enter through the One White Flint North building, 11555 Rockville Pike, Rockville, MD. After registering with security, please contact Mr. Theron Brown (240–888–9835) to be escorted to the meeting room.

Dated: August 22, 2012.

Cayetano Santos,

Chief, Reactor Safety Branch, Advisory Committee on Reactor Safeguards.

[FR Doc. 2012–21297 Filed 8–28–12; 8:45 am]

BILLING CODE 7590–01–P

NUCLEAR REGULATORY COMMISSION

Advisory Committee on Reactor Safeguards (ACRS) Meeting of the ACRS Subcommittee on Fukushima; Notice of Meeting

The ACRS Subcommittee on Fukushima will hold a meeting on September 5, 2012, Room T–2B1, 11545 Rockville Pike, Rockville, Maryland.

The entire meeting will be open to public attendance with the exception of a portion that may be closed to protect information that is propriety, pursuant to 5 U.S.C. 552b(c)(4).

The agenda for the subject meeting shall be as follows:

Wednesday, September 5, 2012–1:30 p.m. until 5 p.m.

The Subcommittee will discuss current research on the role of filtered vents during severe accidents. The Subcommittee will hear presentations by and hold discussions with representatives of the NRC staff, the Electric Power Research Institute, the Paul Scherrer Institute, and other interested persons regarding this matter. The Subcommittee will gather information, analyze relevant issues and facts, and formulate proposed positions and actions, as appropriate, for deliberation by the Full Committee.

Members of the public desiring to provide oral statements and/or written comments should notify the Designated Federal Official (DFO), Antonio Dias (Telephone 301–415–6805 or Email: *Antono.Dias@nrc.gov*) five days prior to the meeting, if possible, so that appropriate arrangements can be made. Thirty-five hard copies of each presentation or handout should be provided to the DFO thirty minutes before the meeting. In addition, one electronic copy of each presentation should be emailed to the DFO one day before the meeting. If an electronic copy cannot be provided within this timeframe, presenters should provide the DFO with a CD containing each presentation at least thirty minutes before the meeting. Electronic recordings will be permitted only during those portions of the meeting that are open to the public. Detailed procedures for the conduct of and participation in ACRS meetings were published in the **Federal Register** on October 17, 2011, (76 FR 64126–64127).

Detailed meeting agendas and meeting transcripts are available on the NRC Web site at *http://www.nrc.gov/reading-rm/doc-collections/acrs.* Information regarding topics to be discussed, changes to the agenda, whether the meeting has been canceled or rescheduled, and the time allotted to present oral statements can be obtained from the Web site cited above or by contacting the identified DFO. Moreover, in view of the possibility that the schedule for ACRS meetings may be adjusted by the Chairman as necessary to facilitate the conduct of the meeting, persons planning to attend should check with these references if such rescheduling would result in a major inconvenience.

If attending this meeting, please enter through the One White Flint North building, 11555 Rockville Pike, Rockville, MD. After registering with security, please contact Mr. Theron Brown (Telephone 240–888–9835) to be escorted to the meeting room.

Dated: August 22, 2012.

Cayetano Santos,

Chief, Technical Support Branch, Advisory Committee on Reactor Safeguards.

[FR Doc. 2012–21298 Filed 8–28–12; 8:45 am]

BILLING CODE 7590–01–P

NUCLEAR REGULATORY COMMISSION

Advisory Committee on Reactor Safeguards (ACRS) Meeting of the ACRS Subcommittee on Plant License Renewal; Notice of Meeting

The ACRS Subcommittee on Plant License Renewal will hold a meeting on September 5, 2012, Room T–2B1, 11545 Rockville Pike, Rockville, Maryland.

The entire meeting will be open to public attendance with the exception of a portion that may be closed to protect information that is propriety, pursuant to 5 U.S.C. 552b(c)(4). The agenda for the subject meeting shall be as follows:

Wednesday, September 5, 2012—8:30 a.m. until 12:00 p.m.

The Subcommittee will review and discuss the license renewal application for the Limerick Generating Station (Units 1 and 2) and the associated Safety Evaluation Report (SER) with Open Items. The Subcommittee will hear presentations by and hold discussions with the NRC staff, the applicant (Exelon Corporation), and other interested persons regarding this matter. The Subcommittee will gather information, analyze relevant issues and facts, and formulate proposed positions and actions, as appropriate, for deliberation by the Full Committee.

Members of the public desiring to provide oral statements and/or written comments should notify the Designated Federal Official (DFO), Peter Wen (Telephone 301–415–2832 or Email: *Peter.Wen@nrc.gov*) five days prior to the meeting, if possible, so that appropriate arrangements can be made. Thirty-five hard copies of each presentation or handout should be provided to the DFO thirty minutes before the meeting. In addition, one electronic copy of each presentation should be emailed to the DFO one day before the meeting. If an electronic copy cannot be provided within this timeframe, presenters should provide the DFO with a CD containing each presentation at least thirty minutes before the meeting. Electronic recordings will be permitted only during those portions of the meeting that are open to the public. Detailed procedures for the conduct of and participation in ACRS meetings were published in the **Federal Register** on October 17, 2011, (76 FR 64126–64127).

Detailed meeting agendas and meeting transcripts are available on the NRC Web site at *http://www.nrc.gov/reading-rm/doc-collections/acrs.* Information regarding topics to be discussed, changes to the agenda, whether the meeting has been canceled or rescheduled, and the time allotted to present oral statements can be obtained from the Web site cited above or by contacting the identified DFO. Moreover, in view of the possibility that the schedule for ACRS meetings may be adjusted by the Chairman as necessary to facilitate the conduct of the meeting, persons planning to attend should check with these references if such rescheduling would result in a major inconvenience.

If attending this meeting, please enter through the One White Flint North building, 11555 Rockville Pike, Rockville, MD. After registering with security, please contact Mr. Theron Brown (Telephone 240–888–9835) to be escorted to the meeting room.

Dated: August 22, 2012.

Antonio Dias,

Technical Advisor, Advisory Committee on Reactor Safeguards.

[FR Doc. 2012–21300 Filed 8–28–12; 8:45 am]

BILLING CODE 7590–01–P

SECURITIES AND EXCHANGE COMMISSION

Proposed Collection; Comment Request

Upon Written Request, Copies Available From: U.S. Securities and Exchange Commission, Office of Investor Education and Advocacy, Washington, DC 20549–0213.

Extension:

Rule 17f–1(c) and Form X–17F–1A; OMB Control No. 3235–0037; SEC File No. 270–29.

Notice is hereby given that pursuant to the Paperwork Reduction Act of 1995 (44 U.S.C. 3501 *et seq.*) the Securities and Exchange Commission (''Commission'') is soliciting comments on the existing collection of information provided for in the following rule, Rule 17f-1(c) and Form X–17F–1A (17 CFR

249.100) under the Securities Exchange Act of 1934 (15 U.S.C. 78a *et seq.*) (''Exchange Act''). The Commission plans to submit this existing collection of information to the Office of Management and Budget (''OMB'') for extension and approval.

Rule 17f–1(c) (17 CFR 240.17f–1(c)) requires approximately 26,000 entities in the securities industry to report lost, stolen, missing, or counterfeit securities to a central database. Form X–17F–1A (17 CFR 249.100) facilitates the accurate reporting and precise and immediate data entry into the central database. Reporting to the central database fulfills a statutory requirement that reporting institutions report and inquire about missing, lost, counterfeit, or stolen securities. Reporting to the central database also allows reporting institutions to gain access to the database that stores information for the Lost and Stolen Securities Program.

We estimate that 26,000 reporting institutions will report that securities are either missing, lost, counterfeit, or stolen annually and that each reporting institution will submit this report 50 times each year. The staff estimates that the average amount of time necessary to comply with Rule 17f–1(c) and Form X–17F–1A is five minutes. The total burden is 108,333 hours annually for respondents (26,000 times 50 times 5 divided by 60).

Written comments are invited on: (a) Whether the proposed collection of information is necessary for the proper performance of the functions of the agency, including whether the information shall have practical utility; (b) the accuracy of the agency's estimate of the burden of the proposed collection of information; (c) ways to enhance the quality, utility, and clarity of the information on respondents; and (d) ways to minimize the burden of the collection of information on respondents, including through the use of automated collection techniques or other forms of information technology. Consideration will be given to comments and suggestions submitted in writing within 60 days of this publication.

The Commission may not conduct or sponsor a collection of information unless it displays a currently valid control number. No person shall be subject to any penalty for failing to comply with a collection of information subject to the PRA that does not display a valid Office of Management and Budget (OMB) control number.

Please direct your written comments to: Thomas Bayer, Director/Chief Information Officer, Securities and Exchange Commission, c/o Remi Pavlik-Simon, 6432 General Green Way, Alexandria, Virginia 22312 or send an email to: *PRA_Mailbox@sec.gov.*

Dated: August 23, 2012.

Kevin M. O'Neill,

Deputy Secretary.

[FR Doc. 2012–21257 Filed 8–28–12; 8:45 am]

BILLING CODE 8011–01–P

SECURITIES AND EXCHANGE COMMISSION

Proposed Collection; Comment Request

Upon Written Request, Copies Available From: Securities and Exchange Commission, Office of Investor Education and Advocacy, Washington, DC 20549–0213.

Extension:

Voluntary XBRL-Related; SEC File No. 270–550; OMB Control No. 3235–0611.

Documents

Notice is hereby given that, pursuant to the Paperwork Reduction Act of 1995 (44 U.S.C. 3501 *et seq.*) (''Paperwork Reduction Act''), the Securities and Exchange Commission (the ''Commission'') is soliciting comments on the collection of information summarized below. The Commission plans to submit this existing collection of information to the Office of Management and Budget (''OMB'') for extension and approval.

As part of our evaluation of the potential of interactive data tagging technology, the Commission permits registered investment companies (''funds'') to submit on a voluntary basis specified financial statement and portfolio holdings disclosure tagged in eXtensible Business Reporting Language (''XBRL'') format as an exhibit to certain filings on the Commission's Electronic Data Gathering, Analysis and Retrieval System (''EDGAR''). The current voluntary program permits any fund to participate merely by submitting a tagged exhibit in the required manner. These exhibits are publicly available but are considered furnished rather than filed. The purpose of the collection of information is to help evaluate the usefulness of data tagging and XBRL to registrants, investors, the Commission, and the marketplace.

We estimate that no funds participate in the voluntary program each year. This information collection, therefore, imposes no time burden; however, we are requesting a one hour burden for administrative purposes. We also estimate that the information collection imposes no cost burden.

Estimates of average burden hours and costs are made solely for the purposes of the Paperwork Reduction Act and are not derived from a comprehensive or even representative survey or study of the costs of Commission rules and forms. Participation in the program is voluntary. Submissions under the program will not be kept confidential. An agency may not conduct or sponsor, and a person is not required to respond to, a collection of information unless it displays a currently valid OMB control number.

Written comments are invited on: (a) Whether the proposed collection of information is necessary for the proper performance of the functions of the agency, including whether the information will have practical utility; (b) the accuracy of the agency's estimate of the burden of the collection of information; (c) ways to enhance the quality, utility, and clarity of the information collected; and (d) ways to minimize the burden of the collection of information on respondents, including through the use of automated collection techniques or other forms of information technology. Consideration will be given to comments and suggestions submitted in writing within 60 days of this publication.

Please direct your written comments to Thomas Bayer, Director/Chief Information Officer, Securities and Exchange Commission, c/o Remi Pavlik-Simon, 6432 General Green Way, Alexandria, VA 22312; or send an email to: *PRA_Mailbox@sec.gov.*

Dated: August 23, 2012.

Kevin M. O'Neill,

Deputy Secretary.

[FR Doc. 2012–21258 Filed 8–28–12; 8:45 am]

BILLING CODE 8011–01–P

SECURITIES AND EXCHANGE COMMISSION

[Release No. 34–67721; File No. SR–NASDAQ–2012–097]

Self-Regulatory Organizations; NASDAQ Stock Market, LLC; Notice of Filing and Immediate Effectiveness of Proposed Rule Change Relating to Membership in The NASDAQ Stock Market LLC

August 23, 2012.

Pursuant to Section 19(b)(1) of the Securities Exchange Act of 1934 (''Act''),[1] and Rule 19b–4 [2] thereunder, notice is hereby given that on August

[1] 15 U.S.C. 78s(b)(1).

[2] 17 CFR 240.19b–4.

21, 2012, The NASDAQ Stock Market LLC (''NASDAQ'' or ''Exchange'') filed with the Securities and Exchange Commission (''Commission'') the proposed rule change as described in Items I, II, and III below, which Items have been prepared by the NASDAQ. The Commission is publishing this notice to solicit comments on the proposed rule change from interested persons.

I. Self-Regulatory Organization's Statement of the Terms of Substance of the Proposed Rule Change

The NASDAQ Stock Market LLC proposes to amend NASDAQ Rule 1013, titled ''New Member Application'' to provide that an applicant that is approved by NASDAQ OMX BX, Inc. (''BX'') shall have the option to apply to become a NASDAQ member through an expedited process.

The text of the proposed rule change is available on the Exchange's Web site at *http://www.nasdaq.cchwallstreet.com,* at *http://www.sec.gov,* at the principal office of the Exchange, and at the Commission's Public Reference Room.

II. Self-Regulatory Organization's Statement of the Purpose of, and Statutory Basis for, the Proposed Rule Change

In its filing with the Commission, the Exchange included statements concerning the purpose of and basis for the proposed rule change. The text of these statements may be examined at the places specified in Item IV below. The Exchange has prepared summaries, set forth in sections A, B, and C below, of the most significant aspects of such statements.

A. Self-Regulatory Organization's Statement of the Purpose of, and Statutory Basis for, the Proposed Rule Change

1. Purpose

The Exchange desires to streamline the process of becoming a NASDAQ member for current BX members. Today, Rule 1013 permits applicants that are an approved Financial Industry Regulatory Authority (''FINRA'') member to have the option to apply to become a NASDAQ member and to register with NASDAQ all associated persons of the firm whose registrations with the firm are approved by FINRA in categories recognized by NASDAQ Rules through an expedited process by submitting a Waive-In Membership Application Form and a NASDAQ Membership Agreement. The Exchange proposes to also permit a current BX member to have the same options as a FINRA member in applying to NASDAQ for membership.

The membership application rules of NASDAQ and BX are substantially similar to each other as are the rules of FINRA with both NASDAQ and BX Rules. BX Rule 1013(a)(5) provides that an approved member of FINRA or NASDAQ may apply to become a BX member and register with the Exchange all associated persons whose registrations are approved with FINRA or NASDAQ (as applicable) in categories of registration recognized by the Exchange through an expedited process by submitting a Short Form Membership Application and Agreement.[3]

The process by which an applicant may register and become a member of NASDAQ, FINRA or BX is substantially similar. The Exchange requests the same information from applicants applying to be members of NASDAQ or BX.[4] The steps and procedures undertaken by Exchange staff of NASDAQ and BX, pursuant to membership rules, are the same for reviewing new member applications.[5]

2. Statutory Basis

The Exchange believes that its proposal is consistent with Section 6(b) of the Act[6] in general, and furthers the objectives of Section 6(b)(5) of the Act[7] in particular, in that it is designed to promote just and equitable principles of trade, to remove impediments to and perfect the mechanism of a free and open market and a national market system, and, in general to protect investors and the public interest, by streamlining the process by which applicants may apply to become a member of NASDAQ. Today, an applicant seeking membership at BX has the option of applying through an expedited process if that applicant is a NASDAQ member. The Exchange believes that same reciprocity should be granted to BX members desiring to become NASDAQ members. The rules and process are substantially similar with nearly identical rules for each market. The Exchange believes that permitting an expedited review similar to the process which exists today for FINRA members would allow BX members to forego unnecessary paperwork that was already obtained at the time they applied to become a BX member.

Additionally, Exchange staff expends considerable time in reviewing applications. The Exchange believes that the streamlined process would not only avoid duplicative processes for BX members, but also assist Exchange staff in conserving resources by focusing on the pertinent information that would be required by a BX member seeking membership at NASDAQ rather than obtaining paperwork that was already provided at the time the BX member applied for membership with BX.

While the Exchange is streamlining the process to create a more efficient review of applications and more appropriately allocate resources, the Exchange will continue to review member applications to ensure that all applications comply with its Rules. BX members have a continuing obligation to comply with Exchange Rules, which are substantially similar to those of NASDAQ. FINRA would initially review the application for membership on NASDAQ's behalf for compliance with those rules and there would also be a requirement for continued compliance as exists for BX today. The Exchange would continue to ensure that all applicants comply with Exchange rules despite a shortened form of application. The Exchange also believes that its proposal will not have a negative impact on the protection of investors or the public interest because the Exchange will continue to review member applications to ensure that all applications comply with its Rules.

B. Self-Regulatory Organization's Statement on Burden on Competition

The Exchange does not believe that the proposed rule change will impose any burden on competition not necessary or appropriate in furtherance of the purposes of the Act.

[3] *See* Securities Exchange Act Release No. 58927 (November 10, 2008), 73 FR 69685 (November 19, 2008) (SR–BSE–2008–48). *See also* BX Rule 1013(a)(5).

[4] *See* NASDAQ Rule 1013 and BX Rule 1013. *See* Securities Exchange Act Release No. 58927 (November 10, 2008), 73 FR 69685 (November 19, 2008) (SR–BSE–2008–48). *See also* BX Rule 1013(a)(5). BX Rule 1013 (a)(5(C) [sic] today provides that a FINRA or NASDAQ member shall have the option to apply to become a member of the Exchange and to register with the Exchange all associated persons of the firm whose registrations with the firm are approved with FINRA or NASDAQ in categories recognized by the Rules of the Exchange through an expedited process by submitting a Short Form Membership Application Form and a Membership Agreement. The Short Form Membership Application Form shall contain information sufficient to establish the identity of the applicant as an approved FINRA or NASDAQ member, its proposed activity on the Exchange, and certain contact personnel, and shall be available on a Web site maintained by the Exchange. The proposal would create a similar rule for NASDAQ to provide BX members the same reciprocity that the BX rule provides today.

[5] *See* NASDAQ Rules 1013 and 1014 and BX Rules 1013 and 1014.

[6] 15 U.S.C. 78f(b).

[7] 15 U.S.C. 78f(b)(5).

C. Self-Regulatory Organization's Statement on Comments on the Proposed Rule Change Received From Members, Participants, or Others

No written comments were either solicited or received.

III. Date of Effectiveness of the Proposed Rule Change and Timing for Commission Action

Because the foregoing proposed rule change does not: (i) Significantly affect the protection of investors or the public interest; (ii) impose any significant burden on competition; and (iii) become operative for 30 days after the date of the filing, or such shorter time as the Commission may designate, it has become effective pursuant to 19(b)(3)(A) of the Act [8] and Rule 19b–4(f)(6) [9] thereunder.

At any time within 60 days of the filing of the proposed rule change, the Commission summarily may temporarily suspend such rule change if it appears to the Commission that such action is necessary or appropriate in the public interest, for the protection of investors, or otherwise in furtherance of the purposes of the Act. If the Commission takes such action, the Commission shall institute proceedings to determine whether the proposed rule should be approved or disapproved.

IV. Solicitation of Comments

Interested persons are invited to submit written data, views, and arguments concerning the foregoing, including whether the proposed rule change is consistent with the Act. Comments may be submitted by any of the following methods:

Electronic Comments

- Use the Commission's Internet comment form (*http://www.sec.gov/rules/sro.shtml*); or
- Send an email to *rule-comments@sec.gov.* Please include File No. SR–NASDAQ–2012–097 on the subject line.

Paper Comments

- Send paper comments in triplicate to Elizabeth M. Murphy, Secretary, Securities and Exchange Commission, 100 F Street NE., Washington, DC 20549–1090.

All submissions should refer to File No. SR–NASDAQ–2012–097. This file number should be included on the subject line if email is used. To help the Commission process and review your comments more efficiently, please use only one method. The Commission will post all comments on the Commission's Web site (*http://www.sec.gov/rules/sro.shtml*). Copies of the submission, all subsequent amendments, all written statements with respect to the proposed rule change that are filed with the Commission, and all written communications relating to the proposed rule change between the Commission and any person, other than those that may be withheld from the public in accordance with the provisions of 5 U.S.C. 552, will be available for Web site viewing and printing in the Commission's Public Reference Room, 100 F Street NE., Washington, DC 20549, on official business days between the hours of 10:00 a.m. and 3:00 p.m. Copies of such filing also will be available for inspection and copying at the principal office of NASDAQ. All comments received will be posted without change; the Commission does not edit personal identifying information from submissions. You should submit only information that you wish to make available publicly. All submissions should refer to File No. SR–NASDAQ–2012–097 and should be submitted on or before September 19, 2012.

For the Commission, by the Division of Trading and Markets, pursuant to delegated authority.[10]

Kevin M. O'Neill,

Deputy Secretary.

[FR Doc. 2012–21256 Filed 8–28–12; 8:45 am]

BILLING CODE 8011–01–P

[8] 15 U.S.C. 78s(b)(3)(A).

[9] 17 CFR 240.19b–4(f)(6). In addition, Rule 19b–4(f)(6) requires a self-regulatory organization to give the Commission written notice of its intent to file the proposed rule change at least five business days prior to the date of filing of the proposed rule change, or such shorter time as designated by the Commission. The Exchange has satisfied this requirement.

[10] 17 CFR 200.30–3(a)(12).

SECURITIES AND EXCHANGE COMMISSION

[Release No. 34–67722; File No. SR–NASDAQ–2012–095]

Self-Regulatory Organizations; The NASDAQ Stock Market LLC; Notice of Filing and Immediate Effectiveness of Proposed Rule Change To Eliminate Market Maker Pre-Opening Obligations on NOM

August 23, 2012.

Pursuant to Section 19(b)(1) of the Securities Exchange Act of 1934 (''Act''),[1] and Rule 19b-4 thereunder,[2] notice is hereby given that on August 10, 2012, The NASDAQ Stock Market LLC (''NASDAQ'' or ''Exchange'') filed with the Securities and Exchange Commission (''Commission'') the proposed rule change as described in Items I and II below, which Items have been prepared by the Exchange. The Commission is publishing this notice to solicit comments on the proposed rule change from interested persons.

I. Self-Regulatory Organization's Statement of the Terms of Substance of the Proposed Rule Change

The Exchange proposes to modify Chapter VII, Section 6 (Market Maker Quotations) of the NASDAQ Options Market, LLC (''NOM''), to eliminate market maker pre-opening obligations on NOM. The Exchange also proposes to modify Chapter VII, Section 5 (Obligations of Market Makers) to conform it to Section 6.

The text of the proposed rule change is available at *http://nasdaq.cchwallstreet.com/,* at the Exchange's principal office, and at the Commission's Public Reference Room.

II. Self-Regulatory Organization's Statement of the Purpose of, and Statutory Basis for, the Proposed Rule Change

In its filing with the Commission, the Exchange included statements concerning the purpose of and basis for the proposed rule change and discussed any comments it received on the proposed rule change. The text of these statements may be examined at the places specified in Item IV below. The Exchange has prepared summaries, set forth in Sections A, B, and C below, of the most significant aspects of such statements.

A. Self-Regulatory Organization's Statement of the Purpose of, and Statutory Basis for, the Proposed Rule Change

1. Purpose

The purpose of the proposed rule change is to modify Chapter VII, Section 6 of the NOM rulebook to remove obligations imposed on NOM market makers (''Market Makers'') [3] to participate in the pre-opening phase in terms of continuous quotes; and to conform Section 5 to Section 6 as modified. This is done to put Market Makers on par with the market makers on other options Exchanges that do not

[1] 15 U.S.C. 78s(b)(1).

[2] 17 CFR 240.19b–4.

[3] A Market Maker is a NOM participant that is registered with the Exchange as a Market Maker and has certain rights and bears certain responsibilities beyond those of other Options Participants. All Market Makers are designated as specialists on NOM. *See* Chapter VII, Section 2.

have pre-market continuous quoting obligations.[4]

Currently, Section 6 of Chapter VII requires that a Market Maker must enter continuous bids and offers in options in which the Market Maker is registered on NOM, an all-electronic market. Specifically, Section 6(d)(i) requires that on a daily basis a Market Maker must: (1) Participate in the pre-opening phase; and (2) thereafter make markets consistent with the applicable quoting requirements specified in NOM rules, on a continuous basis in at least sixty percent (60%) of the series in options in which the Market Maker is registered. Additionally, subsection 6(d)(i)1) indicates that to satisfy the Section 6(d)(i) requirement with respect to quoting a series, a Market Maker must: (3) quote such series 90% of the trading day (as a percentage of the total number of minutes in such trading day) or such higher percentage as Nasdaq may announce in advance.[5] The Exchange does not propose to change any of the continuous quoting requirements applicable to a Market Maker (e.g. continuous quoting in 60% of the Market Maker's registered series for 90% of the trading day)[6] other than to eliminate the requirement to participate in the pre-opening phase in Section 6(d)(i), which is noted in 1) above.

Subsequent to this proposal, a Market Maker will continue to have all of the other quoting obligations that the Market Maker now has pursuant to Section 6, and pursuant to Section 6(d)(i), during regular market hours will be responsible to quote on a continuous basis in at least sixty percent (60%) of the series in options in which the Market Maker is registered for 90% of the trading day (as a percentage of the total number of minutes in such trading day). The change that the Exchange is proposing to Section 6(d)(i) is removal of the Market Maker pre-opening quoting obligation and the insertion of text clarifying that the quoting obligation is during regular market hours.[7] As a result of the Exchange's proposed rule filing, the NOM continuous quoting requirement on NOM's electronic market makers will not have a pre-opening quoting obligation, just as other options exchanges (e.g. Phlx and ISE) do not impose a pre-opening obligation on their electronic market makers.

Phlx and ISE have a continuous quoting obligation during their regular market hours, which are similar to NOM's market hours.[8] However, Phlx and ISE do not have an obligation for their market makers to participate in a pre-opening phase. On Phlx, for example, a Remote Streaming Quote Trader (''RSQT''),[9] which is similar in nature to a NOM Market Maker, has an obligation during trading hours to quote markets in not less than 60% of the series in which such RSQT is assigned (this is akin to NOM Market Maker registration in a series). Unlike a NOM Market Maker, which currently has a pre-opening obligation, a Phlx RSQT *does not have a pre-opening market maker obligation.*[10] And as a second example, there is a quoting requirement for an ISE market maker. However, just like Phlx, and unlike NOM, ISE *does not have a pre-opening market maker obligation.*[11] The proposed filing establishes that NOM Market Makers, like Phlx and ISE market makers, will not have a pre-opening quoting obligation prior to market open.[12]

Exchange Market Makers have noted that unlike NOM, other options exchanges do not have a pre-opening quoting obligation for their market makers, and have requested NOM to eliminate the pre-opening obligation so that NOM rules are similar to those of other options exchanges such as, for example, Phlx. This proposed rule change levels the playing field in respect of pre-opening obligations while leaving all other NOM quoting requirements intact.[13]

Moreover, the Exchange believes that its proposal to put NOM market makers in the same position as market makers on other exchanges will not have a negative effect on NOM investors and traders (''NOM participants''). In particular, the Exchange believes the removal of pre-opening market maker obligations on NOM will have no impact on the functioning of the NOM opening process and in turn will not negatively impact NOM participants. The Exchange generally requires two other option markets to be open prior to NOM initiating an opening process.[14] In addition, orders and quotes executed during the opening process on NOM will continue to be protected by the National Best Bid or Offer (''NBBO''). As such, the Exchange believes that NOM participants will continue to have a similar experience and quality of execution on the opening on NOM as they do today.

The Exchange believes further that the proposed rule change eliminating pre-opening obligations should be pro-competitive in that it will attract more Market Makers, and additional liquidity, onto NOM. This should be advantageous to traders and investors executing trading and hedging strategies on the Exchange.

2. Statutory Basis

The Exchange believes that its proposal is consistent with Section 6(b) of the Act[15] in general, and furthers the objectives of Section 6(b)(5) of the Act[16] in particular, in that the proposal is

[4] NASDAQ OMX Phlx (''Phlx''), and International Securities Exchange, LLC (''ISE'') have market pre-opening phases. However, Phlx and ISE do not, as discussed in the proposal, impose pre-opening obligations on their respective options market makers; none of the exchanges require continuous quoting prior to the regular options trading market. The regular trading market opens on both exchanges at 9:30 Eastern Time.

[5] Subsection (6)(d)(i)2) establishes that three different types of option series are exempted from the continuous quote requirements: quarterly option series, adjusted option series, and series with an expiration of nine months or greater.

For continuous quotation requirements on NOM generally, *see* Chapter XIV, Section 6(d).

[6] The NOM trading day, which represents the regular market hours, is 9:30 a.m. to 4:00 p.m. Eastern Time, except for option contracts on fund shares or broad-based indexes which will close as of 4:15 p.m. Eastern Time. Chapter VI, Section 2.

[7] Proposed Section 6(d)(i) states, in relevant part:

i. On a daily basis, a Market Maker must during regular market hours make markets consistent with the applicable quoting requirements specified in these rules, on a continuous basis in at least sixty percent (60%) of the series in options in which the Market Maker is registered.

[8] *See* supra note 6.

[9] A Phlx RSQT is a Registered Options Trader that is a member or member organization with no physical trading floor presence that may generate and submit option quotations electronically in assigned options. *See* Phlx Rule 1014(b)(ii)(B). While the designation of RSQT does not exist on NOM, a NOM Market Maker enters quotes electronically on NOM just as an RSQT does on Phlx purusuant to specific quoting obligations. *See* NOM Chapter VII, Section 6(d) and Phlx Rule 1014(b)(ii)(D).

[10] For the Phlx continuous quoting rule, *see* Phlx Rule 1014(b)(ii)(D)(1).

[11] ISE rule 804(e)(2)(iii) states, in relevant part, that a Competitive Market Maker must maintain continuous quotations in an options class to which it is appointed and at least 60% of the series of the options class listed on the Exchange until the close of trading that day.

[12] The two-sided quote obligation is noted also in Chapter VII, Section 5(a)(i), which states that during trading hours a Market Maker must maintain a two-sided market, pursuant to Section 6(d)(i) of Chapter VII, in those options in which the Market Maker is registered to trade, in a manner that enhances the depth, liquidity and competitiveness of the market.

Recognizing the requirement to maintain a two-sided market during trading hours per Section 5(a)(i), the Exchange is removing reference in Section 5(a)(ii) to a Market Maker having to enter two-sided quotes before market open by participating in opening the market. This is done for purposes of conforming Section 5(a)(ii) with proposed Section 6(d)(i), which eliminates quoting obligations in the pre-opening phase before the market opens.

[13] Chapter VII, Section 6(d).

[14] For the NOM opening process, *see* Chapter VI, Section 8; and for a description of the two options market opening process, *see http://www.nasdaqtrader.com/content/technicalsupport/NOM_SystemSettings.pdf.*

[15] 15 U.S.C. 78f(b).

[16] 15 U.S.C. 78f(b)(5).

designed to promote just and equitable principles of trade, to remove impediments to and perfect the mechanism of a free and open market and a national market system, and, in general to protect investors and the public interest. The Exchange believes the proposal to conform Market Maker obligations to the requirements of competing markets will promote the application of consistent trading practices. Therefore, the Exchange believes the proposal promotes just and equitable principles of trade and serves to protect investors and the public interest.

Additionally, the Exchange believes the proposal removes a market maker quoting requirement that is unnecessary, as evidenced by the fact that it does not exist on other competitive markets. The Exchange operates in a highly competitive market comprised of ten U.S. options exchanges in which sophisticated and knowledgeable market participants can, and do, send order flow to competing exchanges if they deem trading practices at a particular exchange to be onerous or cumbersome. With this proposal, the Market Maker will be relieved of a market maker requirement that does not materially improve the quality of the markets. On the contrary, the pre-open phase obligation creates an additional obligation and burden on NOM Market Makers that does not exist on numerous other competitive markets. The Exchange believes that in this competitive marketplace, the impact of the pre-open trading practice that exists on the Exchange today compels this proposal. It will allow Market Makers on the Exchange to follow rules that are similar to the rules of other options exchanges that do not impose pre-opening obligations on their market makers, and will allow Market Makers to focus on aspects of their operations that contribute to the market in a more efficient and meaningful way.

B. Self-Regulatory Organization's Statement on Burden on Competition

The Exchange does not believe that the proposed rule change will impose any burden on competition not necessary or appropriate in furtherance of the purposes of the Act. NASDAQ's proposal to eliminate the pre-trading obligation for Market Makers is consistent with what is already occurring on other markets.

C. Self-Regulatory Organization's Statement on Comments on the Proposed Rule Change Received From Members, Participants, or Others

Written comments were neither solicited nor received.

III. Date of Effectiveness of the Proposed Rule Change and Timing for Commission Action

Because the proposed rule change does not (i) significantly affect the protection of investors or the public interest; (ii) impose any significant burden on competition; and (iii) become operative for 30 days from the date on which it was filed, or such shorter time as the Commission may designate if consistent with the protection of investors and the public interest, the proposed rule change has become effective pursuant to Section 19(b)(3)(A) of the Act [17] and Rule 19b-4(f)(6) thereunder.[18] At any time within 60 days of the filing of such proposed rule change, the Commission summarily may temporarily suspend such rule change if it appears to the Commission that such action is necessary or appropriate in the public interest, for the protection of investors, or otherwise in furtherance of the purposes of the Act.

IV. Solicitation of Comments

Interested persons are invited to submit written data, views, and arguments concerning the foregoing, including whether the proposed rule change is consistent with the Act. Comments may be submitted by any of the following methods:

Electronic Comments

- Use the Commission's Internet comment form (*http://www.sec.gov/rules/sro.shtml*); or
- Send an email to *rule-comments@sec.gov.* Please include File Number SR–NASDAQ–2012–095 on the subject line.

Paper Comments

- Send paper comments in triplicate to Elizabeth M. Murphy, Secretary, Securities and Exchange Commission, 100 F Street NE., Washington, DC 20549–1090.

All submissions should refer to File Number *SR–NASDAQ–2012–095.* This file number should be included on the subject line if email is used. To help the Commission process and review your comments more efficiently, please use only one method. The Commission will post all comments on the Commission's Internet Web site (*http://www.sec.gov/rules/sro.shtml*). Copies of the submission, all subsequent amendments, all written statements with respect to the proposed rule change that are filed with the Commission, and all written communications relating to the proposed rule change between the Commission and any person, other than those that may be withheld from the public in accordance with the provisions of 5 U.S.C. 552, will be available for Web site viewing and printing in the Commission's Public Reference Room, 100 F Street NE., Washington, DC 20549, on official business days between the hours of 10:00 a.m. and 3:00 p.m. Copies of the filing also will be available for inspection and copying at the principal office of the Exchange. All comments received will be posted without change; the Commission does not edit personal identifying information from submissions. You should submit only information that you wish to make available publicly. All submissions should refer to File Number SR-NASDAQ–2012–095 and should be submitted on or before September 19, 2012.

For the Commission, by the Division of Trading and Markets, pursuant to delegated authority.[19]

Kevin M. O'Neill,

Deputy Secretary.

[FR Doc. 2012–21274 Filed 8–28–12; 8:45 am]

BILLING CODE 8011–01–P

[17] 15 U.S.C. 78s(b)(3)(A).

[18] 17 CFR 240.19b–4(f)(6). As required under Rule 19b–4(f)(6)(iii), the Exchange provided the Commission with written notice of its intent to file the proposed rule change along with a brief description and the text of the proposed rule change, at least five business days prior to the date of filing of the proposed rule change, or such shorter time as designated by the Commission.

[19] 17 CFR 200.30–3(a)(12).

SECURITIES AND EXCHANGE COMMISSION

[Release No. 34–67723; File No. SR–C2–2012–029]

Self-Regulatory Organizations; C2 Options Exchange, Incorporated; Notice of Filing and Immediate Effectiveness of a Proposed Rule Change To Amend the Fees Schedule

August 23, 2012.

Pursuant to Section 19(b)(1) of the Securities Exchange Act of 1934 (the ''Act''),[1] and Rule 19b–4 thereunder,[2] notice is hereby given that on August 21, 2012, C2 Options Exchange, Incorporated (the ''Exchange'' or ''C2'') filed with the Securities and Exchange

[1] 15 U.S.C. 78s(b)(1).

[2] 17 CFR 240.19b–4.

Commission (the ''Commission'') the proposed rule change as described in Items I, II, and III below, which Items have been prepared by the Exchange. The Commission is publishing this notice to solicit comments on the proposed rule change from interested persons.

I. Self-Regulatory Organization's Statement of the Terms of Substance of the Proposed Rule Change

The Exchange proposes to amend its Fees Schedule. The text of the proposed rule change is available on the Exchange's Web site (*http://www.c2exchange.com/Legal/*), at the Exchange's Office of the Secretary, and at the Commission.

II. Self-Regulatory Organization's Statement of the Purpose of, and Statutory Basis for, the Proposed Rule Change

In its filing with the Commission, the Exchange included statements concerning the purpose of and basis for the proposed rule change and discussed any comments it received on the proposed rule change. The text of these statements may be examined at the places specified in Item IV below. The Exchange has prepared summaries, set forth in sections A, B, and C below, of the most significant aspects of such statements.

A. Self-Regulatory Organization's Statement of the Purpose of, and the Statutory Basis for, the Proposed Rule Change

1. Purpose

On September 2, 2011, the Commission approved a proposed rule change filed by the Exchange to permit on a pilot basis the listing and trading on C2 of Standard & Poor's 500 Index (''S&P 500'') options with third-Friday-of-the-month (''Expiration Friday'') expiration dates for which the exercise settlement value will be based on the index value derived from the closing prices of component securities (''SPXPM'').[3] On September 28, 2011, the Exchange filed an immediately-effective rule change to adopt fees associated with the anticipated trading of SPXPM (the ''Initial SPXPM Fees Filing'').[4] In the Initial SPXPM Fees Filing, the Exchange adopted an SPXPM Tier Appointment Fee of $4,000 which would be charged to any Market-Maker Permit holder that has an appointment (registration) in SPXPM at any time during a calendar month, but the Exchange also waived that fee through November 30, 2011. On November 23, the Exchange extended that waiver through December 31, 2011.[5] The Exchange then extended that waiver again through February 29, 2012,[6] May 31, 2012,[7] and August 31, 2012.[8] The Exchange hereby proposes continuing that waiver through December 31, 2012. The purpose of this waiver extension is to allow more time for the SPXPM market to develop and allow and encourage Market-Makers to join in and elect for an SPXPM Tier Appointment.

2. Statutory Basis

The proposed rule change is consistent with Section 6(b) of the Act,[9] in general, and furthers the objectives of Section 6(b)(4)[10] of the Act in particular, in that it is designed to provide for the equitable allocation of reasonable dues, fees, and other charges among C2 Trading Permit Holders and other persons using Exchange facilities. Continuing the waiver of the SPXPM Tier Appointment Fee is reasonable because it will allow Market-Makers with an SPXPM Tier Appointment to avoid paying the Tier Appointment Fee for a further 4-month period, and is equitable and not unfairly discriminatory because all Market-Makers with an SPXPM Tier Appointment will be able to avoid paying the SPXPM Tier Appointment Fee through December 31, 2012.

B. Self-Regulatory Organization's Statement on Burden on Competition

C2 does not believe that the proposed rule change will impose any burden on competition that is not necessary or appropriate in furtherance of the purposes of the Act.

C. Self-Regulatory Organization's Statement on Comments on the Proposed Rule Change Received From Members, Participants, or Others

The Exchange neither solicited nor received comments on the proposed rule change.

III. Date of Effectiveness of the Proposed Rule Change and Timing for Commission Action

The foregoing rule change has become effective pursuant to Section 19(b)(3)(A)[11] of the Act and paragraph (f) of Rule 19b–4[12] thereunder. At any time within 60 days of the filing of the proposed rule change, the Commission summarily may temporarily suspend such rule change if it appears to the Commission that such action is necessary or appropriate in the public interest, for the protection of investors, or otherwise in furtherance of the purposes of the Act.

IV. Solicitation of Comments

Interested persons are invited to submit written data, views, and arguments concerning the foregoing, including whether the proposed rule change is consistent with the Act. Comments may be submitted by any of the following methods:

Electronic Comments

- Use the Commission's Internet comment form (*http://www.sec.gov/rules/sro.shtml*); or
- Send an email to *rule-comments@sec.gov.* Please include File Number SR–C2-2012–029 on the subject line.

Paper Comments

- Send paper comments in triplicate to Elizabeth M. Murphy, Secretary, Securities and Exchange Commission, 100 F Street NE., Washington, DC 20549–1090.

All submissions should refer to File Number SR–C2–2012–029. This file number should be included on the subject line if email is used. To help the Commission process and review your comments more efficiently, please use only one method. The Commission will post all comments on the Commission's Internet Web site (*http://www.sec.gov/rules/sro.shtml*). Copies of the submission, all subsequent amendments, all written statements with respect to the proposed rule change that are filed with the Commission, and all written communications relating to the proposed rule change between the Commission and any person, other than those that may be withheld from the public in accordance with the provisions of 5 U.S.C. 552, will be available for Web site viewing and printing in the Commission's Public Reference Room, 100 F Street NE., Washington, DC 20549 on official

[3] *See* Securities Exchange Act Release No. 34–65256 (September 2, 2011), 76 FR 55969 (September 9, 2011) (SR–C2–2011–008).

[4] *See* Securities Exchange Act Release No. 34–65471 (October 3, 2011), 76 FR 62491 (October 7, 2011) (SR–C2–2011–026).

[5] *See* Securities Exchange Act Release No. 34–65874 (December 2, 2011), 76 FR 76785 (December 8, 2011) (SR–C2–2011–037).

[6] *See* Securities Exchange Act Release No. 34–66140 (January 12, 2012), 77 FR 2772 (January 19, 2012) (SR–C2–2012–002).

[7] *See* Securities Exchange Act Release No. 34–66472 (February 27, 2012), 77 FR 12898 (March 2, 2012) (SR–C2–2012–008).

[8] *See* Securities Exchange Act Release No. 34–67023 (May 18, 2012), 77 FR 31418 (May 25, 2012) (SR–C2–2012–013).

[9] 15 U.S.C. 78f(b).

[10] 15 U.S.C. 78f(b)(4).

[11] 15 U.S.C. 78s(b)(3)(A).

[12] 17 CFR 240.19b–4(f).

business days between the hours of 10:00 a.m. and 3:00 p.m. Copies of such filing also will be available for inspection and copying at the principal office of the Exchange. All comments received will be posted without change; the Commission does not edit personal identifying information from submissions. You should submit only information that you wish to make available publicly. All submissions should refer to File Number SR–C2–2012–029 and should be submitted on or before September 19, 2012.

For the Commission, by the Division of Trading and Markets, pursuant to delegated authority.[13]

Kevin M. O'Neill,

Deputy Secretary.

[FR Doc. 2012–21313 Filed 8–28–12; 8:45 am]

BILLING CODE 8011–01–P

[13] 17 CFR 200.30–3(a)(12).

SMALL BUSINESS ADMINISTRATION

Disaster Declaration #13239 and #13240; OHIO Disaster # H–00030

AGENCY: U.S. Small Business Administration.

ACTION: Notice.

SUMMARY: This is a Notice of the Presidential declaration of a major disaster for Public Assistance Only for the State of OHIO (FEMA–4077–DR), dated 08/20/2012.

Incident: Severe Storms and Straight-line Winds.

Incident Period: 06/29/2012 through 07/02/2012.

Effective Date: 08/20/2012.

Physical Loan Application Deadline Date: 10/19/2012.

Economic Injury (EIDL) Loan Application Deadline Date: 05/20/2013.

ADDRESSES: Submit completed loan applications to: U.S. Small Business Administration, Processing and Disbursement Center, 14925 Kingsport Road, Fort Worth, TX 76155.

FOR FURTHER INFORMATION CONTACT: A. Escobar, Office of Disaster Assistance, U.S. Small Business Administration, 409 3rd Street SW., Suite 6050, Washington, DC 20416.

SUPPLEMENTARY INFORMATION: Notice is hereby given that as a result of the President's major disaster declaration on 08/20/2012, Private Non-Profit organizations that provide essential services of governmental nature may file disaster loan applications at the address listed above or other locally announced locations.

The following areas have been determined to be adversely affected by the disaster:

Primary Counties: Adams, Allen, Athens, Auglaize, Belmont, Champaign, Clark, Coshocton, Fairfield, Franklin, Gallia, Guernsey, Hancock, Hardin, Harrison, Highland, Hocking, Jackson, Knox, Lawrence, Licking, Logan, Meigs, Miami, Monroe, Morgan, Morrow, Muskingum, Noble, Paulding, Perry, Pickaway, Pike, Putnam, Shelby, Van Wert, Washington.

The Interest Rates are:

	Percent
For Physical Damage:	
Non-Profit Organizations With Credit Available Elsewhere	3.125
Non-Profit Organizations Without Credit Available Elsewhere	3.000
For Economic Injury:	
Non-Profit Organizations Without Credit Available Elsewhere	3.000

The number assigned to this disaster for physical damage is 13239B and for economic injury is 13240B.

(Catalog of Federal Domestic Assistance Numbers 59002 and 59008)

James E. Rivera,

Associate Administrator for Disaster Assistance.

[FR Doc. 2012–21097 Filed 8–28–12; 8:45 am]

BILLING CODE 8025–01–M

SMALL BUSINESS ADMINISTRATION

Advisory Committee on Veterans Business Affairs

AGENCY: U.S. Small Business Administration.

ACTION: Notice of open Federal Advisory Committee meeting.

SUMMARY: The SBA is issuing this notice to announce the location, date, time, and agenda for the next meeting of the Advisory Committee on Veterans Business Affairs. The meeting will be open to the public.

DATES: September 10, 2012 from 9 a.m. to 5 p.m. in the Eisenhower Conference room, side B, located on the 2nd floor.

ADDRESSES: U.S. Small Business Administration, 409 3rd Street SW., Washington, DC 20416.

SUPPLEMENTARY INFORMATION: Pursuant to section 10(a)(2) of the Federal Advisory Committee Act (5 U.S.C., Appendix 2), SBA announces the meeting of the Advisory Committee on Veterans Business Affairs. The Advisory Committee on Veterans Business Affairs serves as an independent source of advice and policy recommendation to the Administrator of the U.S. Small Business Administration. The purpose of the meeting is to finalize preparations for the 2012 Annual Report to SBA's Administrator, Associate Administrator for Veterans Business Development, Congress, and the President. For information regarding our veterans' resources and partners, please visit our Web site at *www.sba.gov/vets.*

FOR FURTHER INFORMATION CONTACT: The meeting is open to the public. Anyone wishing to attend this meeting or to make a presentation to the Advisory Committee on Veterans Business Affairs, advance notice is requested. Please contact Cheryl Simms, Program Liaison, at the U.S. Small Business Administration, Office of Veterans Business Development, 409 3rd Street, SW., Washington, DC 20416; Telephone number: (202) 619–1697; Fax number (202) 481–6085 or by email at *cheryl.simms@sba.gov.*

If you require accommodations because of a disability, please contact the Office of Veterans Business Development at (202) 205–6773 at least two weeks in advance.

Dated: August 17, 2012.

Dan S. Jones,

SBA Committee Management Officer.

[FR Doc. 2012–21101 Filed 8–28–12; 8:45 am]

BILLING CODE M

DEPARTMENT OF STATE

[Delegation of Authority No. 344]

Delegation by the Secretary of State to the Assistant Secretary of State for Consular Affairs the Authority to Determine That it is Necessary To Waive a Visa Interview as a Result of Unusual or Emergent Circumstances

By virtue of the authority vested in me as Secretary of State, including Section 1 of the State Department Basic Authorities Act, as amended (22 U.S.C. 2651a), I hereby delegate to the Assistant Secretary of State for Consular Affairs, to the extent authorized by law, the authority to determine that a visa interview waiver is necessary as a result of unusual or emergent circumstances, as provided under Section 222(h)(1)(C)(ii) of the Immigration and Nationality Act, 8 U.S.C. § 1202.

Any act, executive order, regulation, or procedure subject to, or affected by, this delegation shall be deemed to be such act, executive order, regulation, or

procedure as amended from time to time.

This delegation of authority may be re-delegated to the Deputy Assistant Secretary for Visa Services.

Notwithstanding this delegation of authority, the Secretary, the Deputy Secretary, the Deputy Secretary for Management and Resources, and the Under Secretary for Management may at any time exercise any authority or function delegated by this delegation of authority.

This delegation of authority shall be published in the **Federal Register**.

Dated: August 20, 2012.

Hillary Rodham Clinton,

Secretary of State.

[FR Doc. 2012–21326 Filed 8–28–12; 8:45 am]

BILLING CODE 4710–06–P

DEPARTMENT OF TRANSPORTATION

Federal Motor Carrier Safety Administration

[Docket No. FMCSA–2012–0209]

Agency Information Collection Activities; Revision of a Currently-Approved Information Collection Request: Information Technology Services Survey Portal Customer Satisfaction Assessment (Formerly COMPASS Portal Consumer Satisfaction Assessment)

AGENCY: Federal Motor Carrier Safety Administration (FMCSA), DOT.

ACTION: Notice and request for comments.

SUMMARY: In accordance with the Paperwork Reduction Act of 1995, FMCSA announces its plan to submit the Information Collection Request (ICR) described below to the Office of Management and Budget (OMB) for its review and approval and invites public comment. The collection involves the assessment of FMCSA's strategic decision to integrate its Information Technology (IT) with its business processes using portal technology to consolidate its systems and databases through the FMCSA Information Technology Services Survey modernization initiative. The information to be collected will be used to assess the satisfaction of Federal, State, and industry customers with the FMCSA Information Technology Services Survey Portal. The name of the ''COMPASS Portal Customer Satisfaction Assessment,'' information collection request (ICR) is being changed to ''Information Technology Services Survey Portal Customer Satisfaction Assessment,'' to reflect the need for a broader term than ''COMPASS'' for the portal.

DATES: We must receive your comments on or before October 29, 2012.

ADDRESSES: You may submit comments identified by Federal Docket Management System (FDMS) Docket Number FMCSA–2012–0209 using any of the following methods:

- *Federal eRulemaking Portal: http://www.regulations.gov.* Follow the online instructions for submitting comments.
- *Fax:* 1–202–493–2251.
- *Mail:* Docket Management Facility; U.S. Department of Transportation, 1200 New Jersey Avenue SE., West Building, Ground Floor, Room W12–140, 20590–0001.
- *Hand Delivery or Courier:* West Building, Ground Floor, Room W12–140, 1200 New Jersey Avenue SE., Washington, DC, between 9 a.m. and 5 p.m. e.t., Monday through Friday, except Federal holidays.

Instructions: All submissions must include the Agency name and docket number. For detailed instructions on submitting comments and additional information on the exemption process, see the Public Participation heading below. Note that all comments received will be posted without change to *http://www.regulations.gov,* including any personal information provided. Please see the Privacy Act heading below.

Docket: For access to the docket to read background documents or comments received, go to *http://www.regulations.gov,* and follow the online instructions for accessing the dockets, or go to the street address listed above.

Privacy Act: Anyone is able to search the electronic form of all comments received into any of our dockets by the name of the individual submitting the comment (or signing the comment, if submitted on behalf of an association, business, labor union, etc.). You may review DOT's complete Privacy Act Statement for the Federal Docket Management System published in the **Federal Register** on January 17, 2008 (73 FR 3316), or you may visit *http://edocket.access.gpo.gov/2008/pdfE8–794.pdf.*

Public Participation: The Federal eRulemaking Portal is available 24 hours each day, 365 days each year. You can obtain electronic submission and retrieval help and guidelines under the ''help'' section of the Federal eRulemaking Portal Web site. If you want us to notify you that we received your comments, please include a self-addressed, stamped envelope or postcard, or print the acknowledgement page that appears after submitting comments online. Comments received after the comment closing date will be included in the docket and will be considered to the extent practicable.

FOR FURTHER INFORMATION CONTACT: Ms. Katherine Sinrud, Department of Transportation, Federal Motor Carrier Safety Administration, West Building 6th Floor, 1200 New Jersey Avenue SE., Washington, DC 20590. Telephone: 202–366–3843 email: *katherine.sinrud@dot.gov.*

SUPPLEMENTARY INFORMATION:

Background

Title II, section 207 of the E-Government Act of 2002 requires Government agencies to improve the methods by which government information, including information on the Internet, is organized, preserved, and made accessible to the public. To meet this goal, FMCSA plans to provide a survey on the FMCSA Portal, allowing users to assess its functionality. This functionality includes the capability for Federal, State, and Industry users to access the Agency's existing safety IT systems with a single set of credentials and have easy access to safety data about the companies that do business with FMCSA. The Information Technology program will also focus on improving the accuracy of data to help ensure information, such as carrier name and address, is valid and reliable.

FMCSA's legacy information systems are currently operational. However, having this many stand-alone systems has led to data quality concerns, a need for excessive IDs and passwords, and significant operational and maintenance costs. Integrating our information technologies with our business processes will, in turn, improve our operations considerably, particularly in terms of data quality, ease of use, and reduction of maintenance costs.

In early 2007, FMCSA's Information Technology program launched a series of releases of a new FMCSA Portal to its Federal, State and Industry customers. Over the coming years, more than 15 releases are planned. These releases will use portal technology to fuse and provide numerous services and functions via a single user interface and provide tailored services that seek to meet the needs of specific constituencies within our customer universe.

The FMCSA Information Technology Services Survey Portal will entail considerable expenditure of Federal Government dollars over the years and will fundamentally impact the nature of

the relationship between the Agency and its Federal, State, and Industry customers. Consequently, the Agency intends to conduct regular and ongoing assessments of customer satisfaction with Information Technology Services Survey.

The primary purposes of this assessment are to:

• Determine the extent to which the FMCSA Portal functionality continues to meet the needs of Agency customers.

• Identify and prioritize additional modifications.

• Determine the extent that the FMCSA Portal has impacted FMCSA's relationships with its main customer groups.

The assessment will address:

• Overall customer satisfaction.

• Customer satisfaction against specific items.

• Performance of systems integrator against agreed objectives.

• Desired adjustments and modifications to systems.

• Demonstrated value of investment to FMCSA and DOT.

• Items about the FMCSA Portal that customers like best.

• Customer ideas for making the FMCSA Portal better.

Title: Information Technology Services Survey Portal Customer Satisfaction Assessment.

OMB Control Number: 2126–0042.

Type of Request: Revision of the currently-approved information collection request.

Respondents: Federal, State, and Industry customers/users.

Estimated Number of Respondents: 3,392.

Estimated Time per Response: Five (5) minutes.

Expiration Date: 11/30/2012.

Frequency of Response: 4 times per year.

Estimated Total Annual Burden: 283 hours [91 hours (273 industry user respondents x 5 minutes/60 minutes to complete survey x 4 times per year) + 192 hours (575 Federal and State government respondents × 5 minutes/60 minutes to complete survey × 4 times per year) = 283].

Public Comments Invited: You are asked to comment on any aspect of this information collection, including: (1) Whether the proposed collection is necessary for the agency to perform its mission; (2) the accuracy of the estimated burden; (3) ways for the FMCSA to enhance the quality, usefulness, and clarity of the collected information; and (4) ways that the burden could be minimized without reducing the quality of the collected information. The agency will summarize or include your comments in the request for OMB's clearance of this information collection.

Issued on: August 20, 2012.

Kelly Leone,

Associate Administrator for Office of Research and Information Technology.

[FR Doc. 2012–21197 Filed 8–28–12; 8:45 am]

BILLING CODE 4910–EX–P

DEPARTMENT OF TRANSPORTATION

Federal Motor Carrier Safety Administration

[Docket No. FMCSA–2012–0215]

Qualification of Drivers; Exemption Applications; Vision

AGENCY: Federal Motor Carrier Safety Administration (FMCSA), DOT.

ACTION: Notice of applications for exemptions; request for comments.

SUMMARY: FMCSA announces receipt of applications from 19 individuals for exemption from the vision requirement in the Federal Motor Carrier Safety Regulations. They are unable to meet the vision requirement in one eye for various reasons. The exemptions will enable these individuals to operate commercial motor vehicles (CMVs) in interstate commerce without meeting the prescribed vision requirement in one eye. If granted, the exemptions would enable these individuals to qualify as drivers of commercial motor vehicles (CMVs) in interstate commerce.

DATES: Comments must be received on or before September 28, 2012.

ADDRESSES: You may submit comments bearing the Federal Docket Management System (FDMS) Docket No. FMCSA–2012–0215 using any of the following methods:

• *Federal eRulemaking Portal:* Go to *http://www.regulations.gov*. Follow the on-line instructions for submitting comments.

• *Mail:* Docket Management Facility; U.S. Department of Transportation, 1200 New Jersey Avenue SE., West Building Ground Floor, Room W12–140, Washington, DC 20590–0001.

• *Hand Delivery:* West Building Ground Floor, Room W12–140, 1200 New Jersey Avenue SE., Washington, DC, between 9 a.m. and 5 p.m., Monday through Friday, except Federal Holidays.

• *Fax:* 1–202–493–2251.

Instructions: Each submission must include the Agency name and the docket numbers for this notice. Note that all comments received will be posted without change to *http://www.regulations.gov,* including any personal information provided. Please see the Privacy Act heading below for further information.

Docket: For access to the docket to read background documents or comments, go to *http://www.regulations.gov* at any time or Room W12–140 on the ground level of the West Building, 1200 New Jersey Avenue SE., Washington, DC, between 9 a.m. and 5 p.m., Monday through Friday, except Federal holidays. The FDMS is available 24 hours each day, 365 days each year. If you want acknowledgment that we received your comments, please include a self-addressed, stamped envelope or postcard or print the acknowledgement page that appears after submitting comments on-line.

Privacy Act: Anyone may search the electronic form of all comments received into any of our dockets by the name of the individual submitting the comment (or of the person signing the comment, if submitted on behalf of an association, business, labor union, etc.). You may review DOT's Privacy Act Statement for the FDMS published in the **Federal Register** on January 17, 2008 (73 FR 3316), or you may visit *http://edocket.access.gpo.gov/2008/pdf/E8-785.pdf.*

FOR FURTHER INFORMATION CONTACT: Elaine M. Papp, Chief, Medical Programs Division, (202) 366–4001, *fmcsamedical@dot.gov,* FMCSA, Department of Transportation, 1200 New Jersey Avenue SE., Room W64–224, Washington, DC 20590–0001. Office hours are from 8:30 a.m. to 5 p.m., Monday through Friday, except Federal holidays.

SUPPLEMENTARY INFORMATION:

Background

Under 49 U.S.C. 31136(e) and 31315, FMCSA may grant an exemption from the Federal Motor Carrier Safety Regulations for a 2-year period if it finds ''such exemption would likely achieve a level of safety that is equivalent to or greater than the level that would be achieved absent such exemption.'' FMCSA can renew exemptions at the end of each 2-year period. The 19 individuals listed in this notice have each requested such an exemption from the vision requirement in 49 CFR 391.41(b)(10), which applies to drivers of CMVs in interstate commerce. Accordingly, the Agency will evaluate the qualifications of each applicant to determine whether granting an exemption will achieve the required level of safety mandated by statute.

Qualifications of Applicants

James W. Bittle

Mr. Bittle, age 59, has had chronic retinal detachment in his left eye since 2007. The visual acuity in his right eye is 20/20, and in his left eye, light perception only. Following an examination in 2012, his optometrist noted, ''In my medical opinion, Mr. Bittle has sufficient vision to perform the driving tasks required to operate a commercial vehicle.'' Mr. Bittle reported that he has driven straight trucks for 38 years, accumulating 1.9 million miles, and tractor-trailer combinations for 38 years, accumulating 1.9 million miles. He holds a Class A Commercial Driver's License (CDL) from Oklahoma. His driving record for the last 3 years shows no crashes and no convictions for moving violations in a CMV.

Kenneth C. Caldwell

Mr. Caldwell, 58, has had refractive amblyopia in his left eye since childhood. The visual acuity in his right eye is 20/20, and in his left eye, 20/60. Following an examination in 2012, his optometrist noted, ''Without hesitation, in my medical opinion, I do feel that Kenneth has more than sufficient vision to perform the driving tasks required to operate a commercial vehicle.'' Mr. Caldwell reported that he has driven straight trucks for 36 years, accumulating 2.2 million miles, and tractor-trailer combinations for 30 years, accumulating 1.4 million miles. He holds a Class A CDL from New York. His driving record for the last 3 years shows no crashes and no convictions for moving violations in a CMV.

Paul Claas

Mr. Claas, 63, has had complete loss of vision in his left eye since 1970. The best corrected visual acuity in his right eye is 20/30. Following an examination in 2012, his ophthalmologist noted, ''Therefore, in my opinion, the patient has sufficient vision in his right eye to perform the driving tasks required to operate a commercial vehicle.'' Mr. Claas reported that he has driven straight trucks for 30 years, accumulating 750,000 miles. He holds a Class D operator's license from Wisconsin. His driving record for the last 3 years shows no crashes and one conviction for a moving violation in a CMV; he exceeded the speed limit by 15 mph.

Roger A. Duester

Mr. Duester, 52, has had a retinal detachment in his left eye since 1988. The best corrected visual acuity in his right eye is 20/20; and in his left eye, hand motion vision. Following an examination in 2012, his optometrist noted, ''In my opinion, Roger Duester has sufficient vision to perform the driving tasks required to operate a commercial vehicle based upon my medical exam with him.'' Mr. Duester reported that he has driven tractor-trailer combinations for 6½ years, accumulating 97,500 miles. He holds a Class A CDL from Texas. His driving record for the last 3 years shows no crashes and no convictions for moving violations in a CMV.

Edward A. Egy

Mr. Egy, 58, has had hyperopic astigmatism in his left eye since childhood. The best corrected visual acuity in his right eye is 20/20; and in his left eye, 20/60. Following an examination in 2012, his optometrist noted, ''In my opinion, Edward A. Egy has sufficient vision to perform the tasks required to operate a commercial vehicle as his visual condition is long standing and very stable.'' Mr. Egy reported that he has driven straight trucks for 20 years, accumulating 300,000 miles, and tractor-trailer combinations for 15 years, accumulating 225,000 miles. He holds a Class A CDL from Ohio. His driving record for the last 3 years shows no crashes and no convictions for moving violations in a CMV.

Jonathan D. Evans

Mr. Evans, 36, has had amblyopia in his right eye since birth. The best corrected visual acuity in his right eye is 20/400; and in his left eye, 20/20. Following an examination in 2012, his optometrist noted, ''It is my medical opinion that Mr. Evans has sufficient vision to perform driving tasks required to operate a commercial vehicle.'' Mr. Evans reported that he has driven straight trucks for 3 years, accumulating 45,000 miles. He holds a Class DB CDL from Kentucky. His driving record for the last 3 years shows one crash, which he was not cited for, and no convictions for moving violations in a CMV.

Kelvin Frandin

Mr. Frandin, 34, has had amblyopia in his right eye since birth. The visual acuity in his right eye is 20/200; and in his left eye, 20/20. Following an examination in 2012, his optometrist noted, ''Patient has sufficient vision to perform driving tasks on a commercial vehicle.'' Mr. Frandin reported that he has driven tractor-trailer combinations for 4 years, accumulating 520,000 miles. He holds a Class A CDL from Kentucky. His driving record for the last 3 years shows no crashes and no convictions of moving violations in a CMV.

Charlene E. Geary

Ms. Geary, 48, has had amblyopia in her left eye since childhood. The best corrected visual acuity in her right eye is 20/20; and in her left eye, 20/200. Following an examination in 2012, her optometrist noted, ''Furthermore, I certify that in my medical opinion, Charlene has sufficient vision to perform the driving tasks required to operate a commercial vehicle.'' Ms. Geary reported that she has driven straight trucks for 10 years, accumulating 605,000 miles, and buses for 3 years, accumulating 30,300 miles. She holds a Class A CDL from South Dakota. Her driving record for the last 3 years shows no crashes and no convictions for moving violations in a CMV.

Robert S. Gibson, Jr.

Mr. Gibson, 39, has had strabismic amblyopia in his right eye since childhood. The best corrected visual acuity in his right eye is 20/150; and in his left eye, 20/20. Following an examination in 2011, his optometrist noted, ''In conclusion, it is my professional opinion that I believe Mr. Gibson has sufficient vision to perform the driving tasks required to operate a commercial vehicle.'' Mr. Gibson reported that he has driven straight trucks for 20 years, accumulating 400,000 miles. He holds a Class C operator's license from Pennsylvania. His driving record for the last 3 years shows no crashes but one conviction for a moving violation in a CMV; he failed to obey a traffic control device.

Andrew F. Hill

Mr. Hill, 30, has had a scleral buckle in his left eye since 1991 due to a traumatic injury sustained as a child. The best corrected visual acuity in his right eye is 20/20; and in his left eye, 20/70. Following an examination in 2012, his optometrist noted, ''According to today's exam findings, it is my medical opinion that Andrew has sufficient vision to perform the driving tasks required to operate a commercial vehicle.'' Mr. Hill reported that he has driven straight trucks for 3½ years, accumulating 8,592 miles, and tractor-trailer combinations for 3 years, accumulating 1,886 miles. He holds a Class A CDL from Texas. His driving record for the last 3 years shows no crashes and no convictions of moving violations in a CMV.

David N. Hinchliffe

Mr. Hinchliffe, 57, has a prosthetic left eye due to a traumatic injury sustained in 2006. The best corrected visual acuity in his right eye is 20/20. Following an examination in 2012, his optometrist noted, ''In my opinion, based on the excellent corrected visual acuity and full field of vision of the right eye, I feel that Mr. Hinchliffe does have sufficient vision to perform the driving tasks required to operate a commercial vehicle.'' Mr. Hinchliffe reported that he has driven straight trucks for 25 years, accumulating 250,000 miles, and tractor-trailer combinations for 25 years, accumulating 2.5 million miles. He holds a Class A CDL from Texas. His driving record for the last 3 years shows no crashes and no convictions of moving violations in a CMV.

Michael C. Hoff

Mr. Hoff, 60, has had macular ischemia in his right eye since 2004. The best corrected visual acuity in his right eye is 20/400, and in his left eye, 20/20. Following an examination in 2012, his ophthalmologist noted, ''His vision is sufficient to safely perform commercial driving.'' Mr. Hoff reported that he has driven straight trucks for 25 years, accumulating 250,000 miles, and tractor-trailer combinations for 15 years, accumulating 1.5 million miles. He holds a Class A CDL from Washington. His driving record for the last 3 years shows no crashes and no convictions of moving violations in a CMV.

Joel M. Hunter

Mr. Hunter, 48, has complete loss of vision in his left eye due to a traumatic injury sustained 22 years ago. The best corrected visual acuity in his right eye is 20/20, and in his left eye, count finger vision. Following an examination in 2012, his optometrist noted, ''Following a comprehensive eye examination in my office on 1/5/2012, I have found in my medical opinion that Joel retains sufficient vision to perform the driving tasks required to operate a commercial vehicle.'' Mr. Hunter reported that he has driven straight trucks for 24 years, accumulating 136,800 miles, and tractor-trailer combinations for 24 years, accumulating 240,000 miles. He holds a Class A CDL from Ohio. His driving record for the last 3 years shows no crashes and no convictions of moving violations in a CMV.

Morris W. Lammert, Jr.

Mr. Lammert, 48, has had amblyopia in his right eye due to retinal atrophy caused by a traumatic injury sustained as a child. The visual acuity in his right eye is 20/70, and in his left eye, 20/20. Following an examination in 2012, his optometrist noted, ''Based on these results, it is my medical opinion that Mr. Lammert has sufficient vision to perform the driving tasks required to operate a commercial vehicle.'' Mr. Lammert reported that he has driven tractor-trailer combinations for 25 years, accumulating 250,000 miles. He holds a Class A CDL from Wisconsin. His driving record for the last 3 years shows one crash, which he was not cited for, and no convictions for moving violations in a CMV.

Ray E. Myers II

Mr. Myers, 54, has had retinal detachment in his left eye since 2006. The best corrected visual acuity in his right eye is 20/20, and in his left eye, 20/200. Following an examination in 2011, his optometrist noted, ''I believe Mr. Myers has sufficient vision (with correction) to perform the driving tasks required to operate a commercial vehicle.'' Mr. Myers reported that he has driven tractor-trailer combinations for 27 years, accumulating 1 million miles. He holds a Class A CDL from Maryland. His driving record for the last 3 years shows no crashes and no convictions of moving violations in a CMV.

William J. Powell, Jr.

Mr. Powell, 43, has had loss of vision in his right eye since birth. The best corrected visual acuity in his right eye is no light perception, and in his left eye, 20/20. Following an examination in 2012, his optometrist noted, ''In my medical opinion I feel he has sufficient field of vision to perform driving tasks required to operate a commercial vehicle.'' Mr. Powell reported that he has driven straight trucks for 23 years, accumulating 29,900 miles. He holds a Class B CDL from North Carolina. His driving record for the last 3 years shows no crashes and no convictions of moving violations in a CMV.

Benny L. Sanchez

Mr. Sanchez, 42, has had complete loss of vision in his left eye due to a traumatic injury sustained as a child. The visual acuity in his right eye is 20/20, and in his left eye, no light perception. Following an examination in 2011, his optometrist noted, ''I certify that in my medical opinion that Mr. Benny Sanchez has sufficient vision to perform the driving tasks required to operate a commercial vehicle.'' Mr. Sanchez reported that he has driven straight trucks for 6 years, accumulating 400,000 miles, and tractor-trailer combinations for 4 years, accumulating 140,000 miles. He holds a Class A CDL from California. His driving record for the last 3 years shows one crash, which he was not cited for, and no convictions of moving violations in a CMV.

Sandeep Singh

Mr. Singh, 27, has had amblyopia in his left eye since childhood. The visual acuity in his right eye is 20/20, and in his left eye, 20/400. Following an examination in 2012, his optometrist noted, ''Sandeep's visual field is normal and will not impair his commercial driving ability or his ability to drive ''semi'' vehicles.'' Mr. Singh reported that he has driven tractor-trailer combinations for 3 years, accumulating 570,000 miles. He holds a Class A CDL from California. His driving record for the last 3 years shows no crashes but two convictions of moving violations in a CMV; in both instances, he failed to obey regulatory signs.

James T. Stalker

Mr. Stalker, 54, has had loss of vision in his right eye due to an optic nerve stroke sustained in 2003. The best corrected visual acuity in his right eye is 20/200, and in his left eye, 20/20. Following an examination in 2012, his ophthalmologist noted, ''In my medical opinion Mr. Stalker's vision is adequate for the safe operation of commercial vehicles.'' Mr. Stalker reported that he has driven tractor-trailer combinations for 14 years, accumulating 299,992 miles. He holds a Class A CDL from Ohio. His driving record for the last 3 years shows no crashes and no convictions for moving violations in a CMV.

Request for Comments

In accordance with 49 U.S.C. 31136(e) and 31315, FMCSA requests public comment from all interested persons on the exemption petitions described in this notice. The Agency will consider all comments received before the close of business September 28, 2012. Comments will be available for examination in the docket at the location listed under the **ADDRESSES** section of this notice. The Agency will file comments received after the comment closing date in the public docket, and will consider them to the extent practicable. In addition to late comments, FMCSA will also continue to file, in the public docket, relevant information that becomes available after the comment closing date. Interested persons should monitor the public docket for new material.

Issued on: August 20, 2012.

Larry W. Minor,

Associate Administrator for Policy.

[FR Doc. 2012–21205 Filed 8–28–12; 8:45 am]

BILLING CODE 4910–EX–P

DEPARTMENT OF TRANSPORTATION

Federal Motor Carrier Safety Administration

[Docket No. FMCSA–2012–0218]

Qualification of Drivers; Exemption Applications; Diabetes Mellitus

AGENCY: Federal Motor Carrier Safety Administration (FMCSA), Department of Transportation.

ACTION: Notice of applications for exemption from the diabetes mellitus requirement; request for comments.

SUMMARY: FMCSA announces receipt of applications from 28 individuals for exemption from the prohibition against persons with insulin-treated diabetes mellitus (ITDM) operating commercial motor vehicles (CMVs) in interstate commerce. If granted, the exemptions would enable these individuals with ITDM to operate CMVs in interstate commerce.

DATES: Comments must be received on or before September 28, 2012.

ADDRESSES: You may submit comments bearing the Federal Docket Management System (FDMS) Docket No. FMCSA–2012–0218 using any of the following methods:

- *Federal eRulemaking Portal:* Go to *http://www.regulations.gov.* Follow the on-line instructions for submitting comments.
- *Mail:* Docket Management Facility; U.S. Department of Transportation, 1200 New Jersey Avenue SE., West Building Ground Floor, Room W12–140, Washington, DC 20590–0001.
- *Hand Delivery:* West Building Ground Floor, Room W12–140, 1200 New Jersey Avenue SE., Washington, DC, between 9 a.m. and 5 p.m., Monday through Friday, except Federal Holidays.
- *Fax:* 1–202–493–2251.

Instructions: Each submission must include the Agency name and the docket numbers for this notice. Note that all comments received will be posted without change to *http://www.regulations.gov,* including any personal information provided. Please see the Privacy Act heading below for further information.

Docket: For access to the docket to read background documents or comments, go to *http://www.regulations.gov* at any time or Room W12–140 on the ground level of the West Building, 1200 New Jersey Avenue SE., Washington, DC, between 9 a.m. and 5 p.m., Monday through Friday, except Federal holidays. The Federal Docket Management System (FDMS) is available 24 hours each day, 365 days each year. If you want acknowledgment that we received your comments, please include a self-addressed, stamped envelope or postcard or print the acknowledgement page that appears after submitting comments on-line.

Privacy Act: Anyone may search the electronic form of all comments received into any of our dockets by the name of the individual submitting the comment (or of the person signing the comment, if submitted on behalf of an association, business, labor union, etc.). You may review DOT's Privacy Act Statement for the FDMS published in the **Federal Register** on January 17, 2008 (73 FR 3316), or you may visit *http://edocket.access.gpo.gov/2008/pdf/E8-785.pdf.*

FOR FURTHER INFORMATION CONTACT: Elaine M. Papp, Chief, Medical Programs Division, (202) 366–4001, *fmcsamedical@dot.gov,* FMCSA, Department of Transportation, 1200 New Jersey Avenue SE., Room W64–224, Washington, DC 20590–0001. Office hours are from 8:30 a.m. to 5 p.m., Monday through Friday, except Federal holidays.

SUPPLEMENTARY INFORMATION:

Background

Under 49 U.S.C. 31136(e) and 31315, FMCSA may grant an exemption from the Federal Motor Carrier Safety Regulations for a 2-year period if it finds ''such exemption would likely achieve a level of safety that is equivalent to or greater than the level that would be achieved absent such exemption.'' The statute also allows the Agency to renew exemptions at the end of the 2-year period. The 28 individuals listed in this notice have recently requested such an exemption from the diabetes prohibition in 49 CFR 391.41(b) (3), which applies to drivers of CMVs in interstate commerce. Accordingly, the Agency will evaluate the qualifications of each applicant to determine whether granting the exemption will achieve the required level of safety mandated by the statutes.

Qualifications of Applicants

Anthony J. Annatone

Mr. Annatone, age 61, has had ITDM since 2008. His endocrinologist examined him in 2012 and certified that he has had no severe hypoglycemic reactions resulting in loss of consciousness, requiring the assistance of another person, or resulting in impaired cognitive function that occurred without warning in the past 12 months and no recurrent (2 or more) severe hypoglycemic episodes in the last 5 years. His endocrinologist certifies that Mr. Annatone understands diabetes management and monitoring, has stable control of his diabetes using insulin, and is able to drive a CMV safely. Mr. Annatone meets the vision requirements of 49 CFR 391.41(b)(10). His ophthalmologist examined him in 2012 and certified that he does not have diabetic retinopathy. He holds a Class A Commercial Driver's License (CDL) from Florida.

Trevor J. Corley

Mr. Corley, 29, has had ITDM since 2010. His endocrinologist examined him in 2012 and certified that he has had no severe hypoglycemic reactions resulting in loss of consciousness, requiring the assistance of another person, or resulting in impaired cognitive function that occurred without warning in the past 12 months and no recurrent (2 or more) severe hypoglycemic episodes in the last 5 years. His endocrinologist certifies that Mr. Corley understands diabetes management and monitoring, has stable control of his diabetes using insulin, and is able to drive a CMV safely. Mr. Corley meets the vision requirements of 49 CFR 391.41(b)(10). His optometrist examined him in 2012 and certified that he does not have diabetic retinopathy. He holds a Class A CDL from Texas.

Shannon K. Ellingsworth

Ms. Ellingsworth, 45, has had ITDM since 2011. Her endocrinologist examined her in 2012 and certified that she has had no severe hypoglycemic reactions resulting in loss of consciousness, requiring the assistance of another person, or resulting in impaired cognitive function that occurred without warning in the past 12 months and no recurrent (2 or more) severe hypoglycemic episodes in the last 5 years. Her endocrinologist certifies that Ms. Ellingsworth that she understands diabetes management and monitoring, has stable control of her diabetes using insulin, and is able to drive a CMV safely. Ms. Ellingsworth meets the vision requirements of 49 CFR 391.41(b)(10). Her optometrist examined her in 2012 and certified that she does not have diabetic retinopathy. She holds a Class D operator's license from Kentucky.

Richard T. Ewell

Mr. Ewell, 44, has had ITDM since 2009. His endocrinologist examined him in 2012 and certified that he has had no severe hypoglycemic reactions resulting in loss of consciousness, requiring the assistance of another person, or resulting in impaired cognitive function that occurred without warning in the past 12 months and no recurrent (2 or more) severe hypoglycemic episodes in the last 5 years. His endocrinologist certifies that Mr. Ewell understands diabetes management and monitoring, has stable control of his diabetes using insulin, and is able to drive a CMV safely. Mr. Ewell meets the vision requirements of 49 CFR 391.41(b)(10). His optometrist examined him in 2012 and certified that he does not have diabetic retinopathy. He holds a Class A CDL from Illinois.

Norman S. Forsythe

Mr. Forsythe, 64, has had ITDM since 1991. His endocrinologist examined him in 2012 and certified that he has had no severe hypoglycemic reactions resulting in loss of consciousness, requiring the assistance of another person, or resulting in impaired cognitive function that occurred without warning in the past 12 months and no recurrent (2 or more) severe hypoglycemic episodes in the last 5 years. His endocrinologist certifies that Mr. Forsythe understands diabetes management and monitoring, has stable control of his diabetes using insulin, and is able to drive a CMV safely. Mr. Forsythe meets the vision requirements of 49 CFR 391.41(b)(10). His ophthalmologist examined him in 2012 and certified that he has stable nonproliferative diabetic retinopathy. He holds a Class B CDL from Wisconsin.

Patrick D. Fortier

Mr. Fortier, 59, has had ITDM since 2009. His endocrinologist examined him in 2012 and certified that he has had no severe hypoglycemic reactions resulting in loss of consciousness, requiring the assistance of another person, or resulting in impaired cognitive function that occurred without warning in the past 12 months and no recurrent (2 or more) severe hypoglycemic episodes in the last 5 years. His endocrinologist certifies that Mr. Fortier understands diabetes management and monitoring, has stable control of his diabetes using insulin, and is able to drive a CMV safely. Mr. Fortier meets the vision requirements of 49 CFR 391.41(b)(10). His optometrist examined him in 2012 and certified that he does not have diabetic retinopathy. He holds a Class D operator's license from Minnesota.

Daniel J. Gladen

Mr. Gladen, 39, has had ITDM since 2011. His endocrinologist examined him in 2012 and certified that he has had no severe hypoglycemic reactions resulting in loss of consciousness, requiring the assistance of another person, or resulting in impaired cognitive function that occurred without warning in the past 12 months and no recurrent (2 or more) severe hypoglycemic episodes in the last 5 years. His endocrinologist certifies that Mr. Gladen understands diabetes management and monitoring, has stable control of his diabetes using insulin, and is able to drive a CMV safely. Mr. Gladen meets the vision requirements of 49 CFR 391.41(b)(10). His optometrist examined him in 2012 and certified that he does not have diabetic retinopathy. He holds a Class A CDL from Minnesota.

Walter V. Gruba

Mr. Gruba, 60, has had ITDM since 2007. His endocrinologist examined him in 2012 and certified that he has had no severe hypoglycemic reactions resulting in loss of consciousness, requiring the assistance of another person, or resulting in impaired cognitive function that occurred without warning in the past 12 months and no recurrent (2 or more) severe hypoglycemic episodes in the last 5 years. His endocrinologist certifies that Mr. Gruba understands diabetes management and monitoring, has stable control of his diabetes using insulin, and is able to drive a CMV safely. Mr. Gruba meets the vision requirements of 49 CFR 391.41(b)(10). His optometrist examined him in 2012 and certified that he does not have diabetic retinopathy. He holds a Class A CDL from Virginia.

Marshall D. Howell

Mr. Howell, 53, has had ITDM since 2011. His endocrinologist examined him in 2012 and certified that he has had no severe hypoglycemic reactions resulting in loss of consciousness, requiring the assistance of another person, or resulting in impaired cognitive function that occurred without warning in the past 12 months and no recurrent (2 or more) severe hypoglycemic episodes in the last 5 years. His endocrinologist certifies that Mr. Howell understands diabetes management and monitoring, has stable control of his diabetes using insulin, and is able to drive a CMV safely. Mr. Howell meets the vision requirements of 49 CFR 391.41(b)(10). His ophthalmologist examined him in 2012 and certified that he does not have diabetic retinopathy. He holds a Class A CDL from Michigan.

Larry Knox

Mr. Knox, 55, has had ITDM since 1995. His endocrinologist examined him in 2012 and certified that he has had no severe hypoglycemic reactions resulting in loss of consciousness, requiring the assistance of another person, or resulting in impaired cognitive function that occurred without warning in the past 12 months and no recurrent (2 or more) severe hypoglycemic episodes in the last 5 years. His endocrinologist certifies that Mr. Knox understands diabetes management and monitoring, has stable control of his diabetes using insulin, and is able to drive a CMV safely. Mr. Knox meets the vision requirements of 49 CFR 391.41(b)(10). His optometrist examined him in 2012 and certified that he does not have diabetic retinopathy. He holds a Class D operator's license from Alaska.

Roger P. LaFever

Mr. LaFever, 69, has had ITDM since 2010. His endocrinologist examined him in 2012 and certified that he has had no severe hypoglycemic reactions resulting in loss of consciousness, requiring the assistance of another person, or resulting in impaired cognitive function that occurred without warning in the past 12 months and no recurrent (2 or more) severe hypoglycemic episodes in the last 5 years. His endocrinologist certifies that Mr. LaFever understands diabetes management and monitoring, has stable control of his diabetes using insulin, and is able to drive a CMV safely. Mr. LaFever meets the vision requirements of 49 CFR 391.41(b)(10). His optometrist examined him in 2012 and certified that he does not have diabetic retinopathy. He holds a Class A CDL from Wisconsin.

Blaze E. Lampman

Mr. Lampman, 57, has had ITDM since 2009. His endocrinologist examined him in 2012 and certified that he has had no severe hypoglycemic reactions resulting in loss of consciousness, requiring the assistance of another person, or resulting in impaired cognitive function that occurred without warning in the past 12 months and no recurrent (2 or more) severe hypoglycemic episodes in the last 5 years. His endocrinologist certifies that Mr. Lampman understands diabetes management and monitoring, has stable control of his diabetes using insulin, and is able to drive a CMV safely. Mr. Lampman meets the vision requirements of 49 CFR 391.41(b)(10). His ophthalmologist examined him in 2012 and certified that he does not have

diabetic retinopathy. He holds a Class D operator's license from New York.

William R. Lawrence

Mr. Lawrence, 63, has had ITDM since 2007. His endocrinologist examined him in 2012 and certified that he has had no severe hypoglycemic reactions resulting in loss of consciousness, requiring the assistance of another person, or resulting in impaired cognitive function that occurred without warning in the past 12 months and no recurrent (2 or more) severe hypoglycemic episodes in the last 5 years. His endocrinologist certifies that Mr. Lawrence understands diabetes management and monitoring, has stable control of his diabetes using insulin, and is able to drive a CMV safely. Mr. Lawrence meets the vision requirements of 49 CFR 391.41(b)(10). His optometrist examined him in 2012 and certified that he does not have diabetic retinopathy. He holds a Class A CDL from Montana.

Duane J. Mullins

Mr. Mullins, 56, has had ITDM since 2012. His endocrinologist examined him in 2012 and certified that he has had no severe hypoglycemic reactions resulting in loss of consciousness, requiring the assistance of another person, or resulting in impaired cognitive function that occurred without warning in the past 12 months and no recurrent (2 or more) severe hypoglycemic episodes in the last 5 years. His endocrinologist certifies that Mr. Mullins understands diabetes management and monitoring, has stable control of his diabetes using insulin, and is able to drive a CMV safely. Mr. Mullins meets the vision requirements of 49 CFR 391.41(b)(10). His optometrist examined him in 2012 and certified that he does not have diabetic retinopathy. He holds a Class A CDL from Wisconsin.

Louis R. Noellsch

Mr. Noellsch, 68, has had ITDM since 2011. His endocrinologist examined him in 2012 and certified that he has had no severe hypoglycemic reactions resulting in loss of consciousness, requiring the assistance of another person, or resulting in impaired cognitive function that occurred without warning in the past 12 months and no recurrent (2 or more) severe hypoglycemic episodes in the last 5 years. His endocrinologist certifies that Mr. Noellsch understands diabetes management and monitoring, has stable control of his diabetes using insulin, and is able to drive a CMV safely. Mr. Noellsch meets the vision requirements of 49 CFR 391.41(b)(10). His optometrist examined him in 2012 and certified that he does not have diabetic retinopathy. He holds a Class A CDL from Washington.

Darrin W. Pettis

Mr. Pettis, 35, has had ITDM since 2006. His endocrinologist examined him in 2012 and certified that he has had no severe hypoglycemic reactions resulting in loss of consciousness, requiring the assistance of another person, or resulting in impaired cognitive function that occurred without warning in the past 12 months and no recurrent (2 or more) severe hypoglycemic episodes in the last 5 years. His endocrinologist certifies that Mr. Pettis understands diabetes management and monitoring, has stable control of his diabetes using insulin, and is able to drive a CMV safely. Mr. Pettis meets the vision requirements of 49 CFR 391.41(b)(10). His optometrist examined him in 2012 and certified that he does not have diabetic retinopathy. He holds a Class A CDL from Washington.

Michael J. Raposa

Mr. Raposa, 54, has had ITDM since 2004. His endocrinologist examined him in 2012 and certified that he has had no severe hypoglycemic reactions resulting in loss of consciousness, requiring the assistance of another person, or resulting in impaired cognitive function that occurred without warning in the past 12 months and no recurrent (2 or more) severe hypoglycemic episodes in the last 5 years. His endocrinologist certifies that Mr. Raposa understands diabetes management and monitoring, has stable control of his diabetes using insulin, and is able to drive a CMV safely. Mr. Raposa meets the vision requirements of 49 CFR 391.41(b)(10). His ophthalmologist examined him in 2012 and certified that he does not have diabetic retinopathy. He holds a Class A CDL from Massachusetts.

Jeremy K. Redger

Mr. Redger, 26, has had ITDM since 1992. His endocrinologist examined him in 2012 and certified that he has had no severe hypoglycemic reactions resulting in loss of consciousness, requiring the assistance of another person, or resulting in impaired cognitive function that occurred without warning in the past 12 months and no recurrent (2 or more) severe hypoglycemic episodes in the last 5 years. His endocrinologist certifies that Mr. Redger understands diabetes management and monitoring, has stable control of his diabetes using insulin, and is able to drive a CMV safely. Mr. Redger meets the vision requirements of 49 CFR 391.41(b)(10). His optometrist examined him in 2012 and certified that he does not have diabetic retinopathy. He holds a Class E operator's license from Louisiana.

Anthony E. Reed

Mr. Reed, 53, has had ITDM since 2012. His endocrinologist examined him in 2012 and certified that he has had no severe hypoglycemic reactions resulting in loss of consciousness, requiring the assistance of another person, or resulting in impaired cognitive function that occurred without warning in the past 12 months and no recurrent (2 or more) severe hypoglycemic episodes in the last 5 years. His endocrinologist certifies that Mr. Reed understands diabetes management and monitoring, has stable control of his diabetes using insulin, and is able to drive a CMV safely. Mr. Reed meets the vision requirements of 49 CFR 391.41(b)(10). His ophthalmologist examined him in 2012 and certified that he does not have diabetic retinopathy. He holds a Class A CDL from Missouri.

Earl L. Slater

Mr. Slater, 55, has had ITDM since 1997. His endocrinologist examined him in 2012 and certified that he has had no severe hypoglycemic reactions resulting in loss of consciousness, requiring the assistance of another person, or resulting in impaired cognitive function that occurred without warning in the past 12 months and no recurrent (2 or more) severe hypoglycemic episodes in the last 5 years. His endocrinologist certifies that Mr. Slater understands diabetes management and monitoring, has stable control of his diabetes using insulin, and is able to drive a CMV safely. Mr. Slater meets the vision requirements of 49 CFR 391.41(b)(10). His optometrist examined him in 2012 and certified that he does not have diabetic retinopathy. He holds a Class D operator's license from New York.

Keith J. Tavares

Mr. Tavares, 26, has had ITDM since 1993. His endocrinologist examined him in 2012 and certified that he has had no severe hypoglycemic reactions resulting in loss of consciousness, requiring the assistance of another person, or resulting in impaired cognitive function that occurred without warning in the past 12 months and no recurrent (2 or more) severe hypoglycemic episodes in the last 5 years. His endocrinologist certifies that Mr. Tavares understands diabetes management and monitoring, has stable control of his diabetes using insulin, and is able to drive a CMV safely. Mr. Tavares meets the vision requirements of 49 CFR 391.41(b)(10). His ophthalmologist examined him in 2012 and certified that he has stable

nonproliferative diabetic retinopathy. He holds a Class A CDL from Massachusetts.

Phillip L. Truitt

Mr. Truitt, 58, has had ITDM since 2010. His endocrinologist examined him in 2012 and certified that he has had no severe hypoglycemic reactions resulting in loss of consciousness, requiring the assistance of another person, or resulting in impaired cognitive function that occurred without warning in the past 12 months and no recurrent (2 or more) severe hypoglycemic episodes in the last 5 years. His endocrinologist certifies that Mr. Truitt understands diabetes management and monitoring, has stable control of his diabetes using insulin, and is able to drive a CMV safely. Mr. Truitt meets the vision requirements of 49 CFR 391.41(b)(10). His ophthalmologist examined him in 2012 and certified that he does not have diabetic retinopathy. He holds a Class A CDL from Maryland.

Gregory H. Tullock

Mr. Tullock, 58, has had ITDM since 2011. His endocrinologist examined him in 2012 and certified that he has had no severe hypoglycemic reactions resulting in loss of consciousness, requiring the assistance of another person, or resulting in impaired cognitive function that occurred without warning in the past 12 months and no recurrent (2 or more) severe hypoglycemic episodes in the last 5 years. His endocrinologist certifies that Mr. Tullock understands diabetes management and monitoring, has stable control of his diabetes using insulin, and is able to drive a CMV safely. Mr. Tullock meets the vision requirements of 49 CFR 391.41(b)(10). His ophthalmologist examined him in 2012 and certified that he does not have diabetic retinopathy. He holds a Class D operator's license from New Jersey.

Michael D. Underwood

Mr. Underwood, 58, has had ITDM since 1966. His endocrinologist examined him in 2012 and certified that he has had no severe hypoglycemic reactions resulting in loss of consciousness, requiring the assistance of another person, or resulting in impaired cognitive function that occurred without warning in the past 12 months and no recurrent (2 or more) severe hypoglycemic episodes in the last 5 years. His endocrinologist certifies that Mr. Underwood understands diabetes management and monitoring, has stable control of his diabetes using insulin, and is able to drive a CMV safely. Mr. Underwood meets the vision requirements of 49 CFR 391.41(b)(10). His optometrist examined him in 2012 and certified that he does not have diabetic retinopathy. He holds a Class D operator's license from Alabama.

Raffaele Vano

Mr. Vano, 64, has had ITDM since prior to 2008. His endocrinologist examined him in 2012 and certified that he has had no severe hypoglycemic reactions resulting in loss of consciousness, requiring the assistance of another person, or resulting in impaired cognitive function that occurred without warning in the past 12 months and no recurrent (2 or more) severe hypoglycemic episodes in the last 5 years. His endocrinologist certifies that Mr. Vano understands diabetes management and monitoring, has stable control of his diabetes using insulin, and is able to drive a CMV safely. Mr. Vano meets the vision requirements of 49 CFR 391.41(b)(10). His ophthalmologist examined him in 2012 and certified that he has stable nonproliferative diabetic retinopathy. He holds a Class B CDL from New York.

Brian D. Weeden

Mr. Weeden, 49, has had ITDM since 2005. His endocrinologist examined him in 2012 and certified that he has had no severe hypoglycemic reactions resulting in loss of consciousness, requiring the assistance of another person, or resulting in impaired cognitive function that occurred without warning in the past 12 months and no recurrent (2 or more) severe hypoglycemic episodes in the last 5 years. His endocrinologist certifies that Mr. Weeden understands diabetes management and monitoring, has stable control of his diabetes using insulin, and is able to drive a CMV safely. Mr. Weeden meets the vision requirements of 49 CFR 391.41(b)(10). His optometrist examined him in 2012 and certified that he does not have diabetic retinopathy. He holds an operator's license from New Hampshire.

David A. Weinbroer

Mr. Weinbroer, 58, has had ITDM since 2012. His endocrinologist examined him in 2012 and certified that he has had no severe hypoglycemic reactions resulting in loss of consciousness, requiring the assistance of another person, or resulting in impaired cognitive function that occurred without warning in the past 12 months and no recurrent (2 or more) severe hypoglycemic episodes in the last 5 years. His endocrinologist certifies that Mr. Weinbroer understands diabetes management and monitoring, has stable control of his diabetes using insulin, and is able to drive a CMV safely. Mr. Weinbroer meets the vision requirements of 49 CFR 391.41(b)(10). His optometrist examined him in 2012 and certified that he does not have diabetic retinopathy. He holds a Class A CDL from Kentucky.

Robert J. Westover

Mr. Westover, 45, has had ITDM since 1992. His endocrinologist examined him in 2012 and certified that he has had no severe hypoglycemic reactions resulting in loss of consciousness, requiring the assistance of another person, or resulting in impaired cognitive function that occurred without warning in the past 12 months and no recurrent (2 or more) severe hypoglycemic episodes in the last 5 years. His endocrinologist certifies that Mr. Westover understands diabetes management and monitoring, has stable control of his diabetes using insulin, and is able to drive a CMV safely. Mr. Westover meets the vision requirements of 49 CFR 391.41(b)(10). His optometrist examined him in 2012 and certified that he does not have diabetic retinopathy. He holds a Class D operator's license from Wisconsin.

Request for Comments

In accordance with 49 U.S.C. 31136(e) and 31315, FMCSA requests public comment from all interested persons on the exemption petitions described in this notice. We will consider all comments received before the close of business on the closing date indicated in the date section of the notice.

FMCSA notes that section 4129 of the Safe, Accountable, Flexible and Efficient Transportation Equity Act: A Legacy for Users requires the Secretary to revise its diabetes exemption program established on September 3, 2003 (68 FR 52441).[1] The revision must provide for individual assessment of drivers with diabetes mellitus, and be consistent with the criteria described in section 4018 of the Transportation Equity Act for the 21st Century (49 U.S.C. 31305).

Section 4129 requires: (1) Elimination of the requirement for 3 years of experience operating CMVs while being treated with insulin; and (2) establishment of a specified minimum period of insulin use to demonstrate stable control of diabetes before being allowed to operate a CMV.

In response to section 4129, FMCSA made immediate revisions to the diabetes exemption program established by the September 3, 2003 notice. FMCSA discontinued use of the 3-year

[1] Section 4129(a) refers to the 2003 notice as a ''final rule.'' However, the 2003 notice did not issue a ''final rule'' but did establish the procedures and standards for issuing exemptions for drivers with ITDM.

driving experience and fulfilled the requirements of section 4129 while continuing to ensure that operation of CMVs by drivers with ITDM will achieve the requisite level of safety required of all exemptions granted under 49 U.S.C. 31136(e).

Section 4129(d) also directed FMCSA to ensure that drivers of CMVs with ITDM are not held to a higher standard than other drivers, with the exception of limited operating, monitoring and medical requirements that are deemed medically necessary.

The FMCSA concluded that all of the operating, monitoring and medical requirements set out in the September 3, 2003 notice, except as modified, were in compliance with section 4129(d). Therefore, all of the requirements set out in the September 3, 2003 notice, except as modified by the notice in the **Federal Register** on November 8, 2005 (70 FR 67777), remain in effect.

Issued on: August 20, 2012.

Larry W. Minor,

Associate Administrator for Policy.

[FR Doc. 2012–21200 Filed 8–28–12; 8:45 am]

BILLING CODE P

DEPARTMENT OF TRANSPORTATION

Federal Motor Carrier Safety Administration

[Docket No. FMCSA–2008–0231; FMCSA–2010–0082; FMCSA–2010–0114]

Qualification of Drivers; Exemption Applications; Vision

AGENCY: Federal Motor Carrier Safety Administration (FMCSA), DOT.

ACTION: Notice of renewal of exemptions; request for comments.

SUMMARY: FMCSA announces its decision to renew the exemptions from the vision requirement in the Federal Motor Carrier Safety Regulations for 14 individuals. FMCSA has statutory authority to exempt individuals from the vision requirement if the exemptions granted will not compromise safety. The Agency has concluded that granting these exemption renewals will provide a level of safety that is equivalent to or greater than the level of safety maintained without the exemptions for these commercial motor vehicle (CMV) drivers.

DATES: This decision is effective September 23, 2012. Comments must be received on or before September 28, 2012.

ADDRESSES: You may submit comments bearing the Federal Docket Management System (FDMS) numbers: Docket No. FMCSA–2008–0231; FMCSA–2010–0082; FMCSA–2010–0114, using any of the following methods:

- *Federal eRulemaking Portal:* Go to *http://www.regulations.gov.* Follow the on-line instructions for submitting comments.
- *Mail:* Docket Management Facility; U.S. Department of Transportation, 1200 New Jersey Avenue SE., West Building Ground Floor, Room W12–140, Washington, DC 20590–0001.
- *Hand Delivery or Courier:* West Building Ground Floor, Room W12–140, 1200 New Jersey Avenue SE., Washington, DC, between 9 a.m. and 5 p.m., Monday through Friday, except Federal Holidays.
- *Fax:* 1–202–493–2251.

Instructions: Each submission must include the Agency name and the docket number for this notice. Note that DOT posts all comments received without change to *http://www.regulations.gov,* including any personal information included in a comment. Please see the Privacy Act heading below.

Docket: For access to the docket to read background documents or comments, go to *http://www.regulations.gov* at any time or Room W12–140 on the ground level of the West Building, 1200 New Jersey Avenue SE., Washington, DC, between 9 a.m. and 5 p.m., Monday through Friday, except Federal holidays. The Federal Docket Management System (FDMS) is available 24 hours each day, 365 days each year. If you want acknowledgment that we received your comments, please include a self-addressed, stamped envelope or postcard or print the acknowledgement page that appears after submitting comments on-line.

Privacy Act: Anyone may search the electronic form of all comments received into any of our dockets by the name of the individual submitting the comment (or of the person signing the comment, if submitted on behalf of an association, business, labor union, etc.). You may review DOT's Privacy Act Statement for the FDMS published in the **Federal Register** on January 17, 2008 (73 FR 3316), or you may visit *http://edocket.access.gpo.gov/2008/pdf/E8-785.pdf.*

FOR FURTHER INFORMATION CONTACT: Elaine M. Papp, Chief, Medical Programs Division, 202–366–4001, *fmcsamedical@dot.gov,* FMCSA, Department of Transportation, 1200 New Jersey Avenue SE., Room W64–224, Washington, DC 20590–0001. Office hours are from 8:30 a.m. to 5 p.m. Monday through Friday, except Federal holidays.

SUPPLEMENTARY INFORMATION:

Background

Under 49 U.S.C. 31136(e) and 31315, FMCSA may renew an exemption from the vision requirements in 49 CFR 391.41(b)(10), which applies to drivers of CMVs in interstate commerce, for a two-year period if it finds ''such exemption would likely achieve a level of safety that is equivalent to or greater than the level that would be achieved absent such exemption.'' The procedures for requesting an exemption (including renewals) are set out in 49 CFR part 381.

Exemption Decision

This notice addresses 14 individuals who have requested renewal of their exemptions in accordance with FMCSA procedures. FMCSA has evaluated these 14 applications for renewal on their merits and decided to extend each exemption for a renewable two-year period. They are:

William C. Ball (NC)
Terrence L. Benning (WI)
Robert S. Bowen (GA)
Dennis R. Buszkiewicz (IL)
Larry T. Byrley (OH)
James R. Corley (AL)
Alfred A. Costantino (RI)
Larry D. Curry (GA)
Kelly M. Greene (FL)
John H. Holmberg (WI)
William D. Holt (AZ)
Garry R. Lomen (WA)
Thomas P. Shank (NY)
Christopher M. Vincent (NC)

The exemptions are extended subject to the following conditions: (1) That each individual has a physical examination every year (a) by an ophthalmologist or optometrist who attests that the vision in the better eye continues to meet the requirements in 49 CFR 391.41(b)(10), and (b) by a medical examiner who attests that the individual is otherwise physically qualified under 49 CFR 391.41; (2) that each individual provides a copy of the ophthalmologist's or optometrist's report to the medical examiner at the time of the annual medical examination; and (3) that each individual provide a copy of the annual medical certification to the employer for retention in the driver's qualification file and retains a copy of the certification on his/her person while driving for presentation to a duly authorized Federal, State, or local enforcement official. Each exemption will be valid for two years unless rescinded earlier by FMCSA. The exemption will be rescinded if: (1) The

person fails to comply with the terms and conditions of the exemption; (2) the exemption has resulted in a lower level of safety than was maintained before it was granted; or (3) continuation of the exemption would not be consistent with the goals and objectives of 49 U.S.C. 31136(e) and 31315.

Basis for Renewing Exemptions

Under 49 U.S.C. 31315(b)(1), an exemption may be granted for no longer than two years from its approval date and may be renewed upon application for additional two year periods. In accordance with 49 U.S.C. 31136(e) and 31315, each of the 14 applicants has satisfied the entry conditions for obtaining an exemption from the vision requirements (73 FR 46973; 73 FR 54888; 75 FR 25917; 75 FR 34209; 75 FR 39727; 75 FR 47886; 75 FR 52063). Each of these 14 applicants has requested renewal of the exemption and has submitted evidence showing that the vision in the better eye continues to meet the requirement specified at 49 CFR 391.41(b)(10) and that the vision impairment is stable. In addition, a review of each record of safety while driving with the respective vision deficiencies over the past two years indicates each applicant continues to meet the vision exemption requirements. These factors provide an adequate basis for predicting each driver's ability to continue to drive safely in interstate commerce. Therefore, FMCSA concludes that extending the exemption for each renewal applicant for a period of two years is likely to achieve a level of safety equal to that existing without the exemption.

Request for Comments

FMCSA will review comments received at any time concerning a particular driver's safety record and determine if the continuation of the exemption is consistent with the requirements at 49 U.S.C. 31136(e) and 31315. However, FMCSA requests that interested parties with specific data concerning the safety records of these drivers submit comments by September 28, 2012.

FMCSA believes that the requirements for a renewal of an exemption under 49 U.S.C. 31136(e) and 31315 can be satisfied by initially granting the renewal and then requesting and evaluating, if needed, subsequent comments submitted by interested parties. As indicated above, the Agency previously published notices of final disposition announcing its decision to exempt these 14 individuals from the vision requirement in 49 CFR 391.41(b)(10). The final decision to grant an exemption to each of these individuals was made on the merits of each case and made only after careful consideration of the comments received to its notices of applications. The notices of applications stated in detail the qualifications, experience, and medical condition of each applicant for an exemption from the vision requirements. That information is available by consulting the above cited **Federal Register** publications.

Interested parties or organizations possessing information that would otherwise show that any, or all, of these drivers are not currently achieving the statutory level of safety should immediately notify FMCSA. The Agency will evaluate any adverse evidence submitted and, if safety is being compromised or if continuation of the exemption would not be consistent with the goals and objectives of 49 U.S.C. 31136(e) and 31315, FMCSA will take immediate steps to revoke the exemption of a driver.

Issued on: August 20, 2012.

Larry W. Minor,

Associate Administrator for Policy.

[FR Doc. 2012–21219 Filed 8–28–12; 8:45 am]

BILLING CODE 4910–EX–P

DEPARTMENT OF TRANSPORTATION

Federal Motor Carrier Safety Administration

[Docket No. FMCSA–2000–7006; FMCSA–2000–7165; FMCSA–2002–12294; FMCSA–2004–17195; FMCSA–2006–24783; FMCSA–2008–0106; FMCSA–2010–0050; FMCSA–2010–0082]

Qualification of Drivers; Exemption Applications; Vision

AGENCY: Federal Motor Carrier Safety Administration (FMCSA), DOT.

ACTION: Notice of renewal of exemptions; request for comments.

SUMMARY: FMCSA announces its decision to renew the exemptions from the vision requirement in the Federal Motor Carrier Safety Regulations for 35 individuals. FMCSA has statutory authority to exempt individuals from the vision requirement if the exemptions granted will not compromise safety. The Agency has concluded that granting these exemption renewals will provide a level of safety that is equivalent to or greater than the level of safety maintained without the exemptions for these commercial motor vehicle (CMV) drivers.

DATES: This decision is effective September 21, 2012. Comments must be received on or before September 28, 2012.

ADDRESSES: You may submit comments bearing the Federal Docket Management System (FDMS) numbers: Docket No. FMCSA–2000–7006; FMCSA–2000–7165; FMCSA–2002–12294; FMCSA–2004–17195; FMCSA–2006–24783; FMCSA–2008–0106; FMCSA–2010–0050; FMCSA–2010–0082, using any of the following methods:

- *Federal eRulemaking Portal:* Go to *http://www.regulations.gov.* Follow the on-line instructions for submitting comments.
- *Mail:* Docket Management Facility; U.S. Department of Transportation, 1200 New Jersey Avenue SE., West Building Ground Floor, Room W12–140, Washington, DC 20590–0001.
- *Hand Delivery or Courier:* West Building Ground Floor, Room W12–140, 1200 New Jersey Avenue SE., Washington, DC, between 9 a.m. and 5 p.m., Monday through Friday, except Federal Holidays.
- *Fax:* 1–202–493–2251.

Instructions: Each submission must include the Agency name and the docket number for this notice. Note that DOT posts all comments received without change to *http://www.regulations.gov,* including any personal information included in a comment. Please see the Privacy Act heading below.

Docket: For access to the docket to read background documents or comments, go to *http://www.regulations.gov* at any time or Room W12–140 on the ground level of the West Building, 1200 New Jersey Avenue SE., Washington, DC, between 9 a.m. and 5 p.m., Monday through Friday, except Federal holidays. The Federal Docket Management System (FDMS) is available 24 hours each day, 365 days each year. If you want acknowledgment that we received your comments, please include a self-addressed, stamped envelope or postcard or print the acknowledgement page that appears after submitting comments on-line.

Privacy Act: Anyone may search the electronic form of all comments received into any of our dockets by the name of the individual submitting the comment (or of the person signing the comment, if submitted on behalf of an association, business, labor union, etc.). You may review DOT's Privacy Act Statement for the FDMS published in the **Federal Register** on January 17, 2008 (73 FR 3316), or you may visit *http://edocket.access.gpo.gov/2008/pdf/E8-785.pdf.*

FOR FURTHER INFORMATION CONTACT: Elaine M. Papp, Chief, Medical Programs Division, 202–366–4001, *fmcsamedical@dot.gov,* FMCSA, Department of Transportation, 1200 New Jersey Avenue SE., Room W64–224, Washington, DC 20590–0001. Office hours are from 8:30 a.m. to 5 p.m. Monday through Friday, except Federal holidays.

SUPPLEMENTARY INFORMATION:

Background

Under 49 U.S.C. 31136(e) and 31315, FMCSA may renew an exemption from the vision requirements in 49 CFR 391.41(b)(10), which applies to drivers of CMVs in interstate commerce, for a two-year period if it finds ''such exemption would likely achieve a level of safety that is equivalent to or greater than the level that would be achieved absent such exemption.'' The procedures for requesting an exemption (including renewals) are set out in 49 CFR part 381.

Exemption Decision

This notice addresses 35 individuals who have requested renewal of their exemptions in accordance with FMCSA procedures. FMCSA has evaluated these 35 applications for renewal on their merits and decided to extend each exemption for a renewable two-year period. They are:

Derric D. Burrell (AL)
Jack D. Clodfelter (NC)
Tommy J. Cross, Jr. (TN)
Daniel K. Davis, III (MA)
Eric L. Dawson III (NC)
Richard L. Derick (NH)
Craig E. Dorrance (MT)
Joseph A. Dunlap (OH)
Calvin J. Eldridge (WA)
Shawn B. Gaston (PA)
James F. Gereau (WI)
Eric M. Giddens, Sr. (DE)
Esteban G. Gonzalez (TX)
Reginald I. Hall (TX)
James O. Hancock (IN)
Sherman W. Hawk, Jr. (MD)
Malcom R. Heins (WI)
Robert C. Jeffres (WY)
Alfred C. Jewell, Jr. (WY)
Leslie A. Landschoot (NY)
John C. Lewis (SC)
Lewis V. McNeice (TX)
Larry D. Moss (CA)
Kevin J. O'Donnell (IL)
Gregory M. Preves (GA)
Paul C. Reagle, Sr. (NJ)
Ronney L. Rogers (WA)
Daniel Salinas (OR)
Lee R. Sidwell (OH)
David L. Slack (TX)
David M. Smith (IL)
Jamie C. Smith (KY)
Roger R. Strehlow (WI)
Jeffrey D. Wilson (CO)
Richard A. Yeager (GA)

The exemptions are extended subject to the following conditions: (1) That each individual has a physical examination every year (a) by an ophthalmologist or optometrist who attests that the vision in the better eye continues to meet the requirements in 49 CFR 391.41(b)(10), and (b) by a medical examiner who attests that the individual is otherwise physically qualified under 49 CFR 391.41; (2) that each individual provides a copy of the ophthalmologist's or optometrist's report to the medical examiner at the time of the annual medical examination; and (3) that each individual provide a copy of the annual medical certification to the employer for retention in the driver's qualification file and retains a copy of the certification on his/her person while driving for presentation to a duly authorized Federal, State, or local enforcement official. Each exemption will be valid for two years unless rescinded earlier by FMCSA. The exemption will be rescinded if: (1) The person fails to comply with the terms and conditions of the exemption; (2) the exemption has resulted in a lower level of safety than was maintained before it was granted; or (3) continuation of the exemption would not be consistent with the goals and objectives of 49 U.S.C. 31136(e) and 31315.

Basis for Renewing Exemptions

Under 49 U.S.C. 31315(b)(1), an exemption may be granted for no longer than two years from its approval date and may be renewed upon application for additional two year periods. In accordance with 49 U.S.C. 31136(e) and 31315, each of the 35 applicants has satisfied the entry conditions for obtaining an exemption from the vision requirements (65 FR 20245; 65 FR 33406; 65 FR 57230; 65 FR 57234; 67 FR 46016; 67 FR 57266; 67 FR 57267; 69 FR 17263; 69 FR 31447; 69 FR 51346; 69 FR 52741; 71 FR 27034; 71 FR 32185; 71 FR 41311; 71 FR 43557; 71 FR 50970; 71 FR 53489; 73 FR 35197; 73 FR 35199; 73 FR 35200; 73 FR 42403; 73 FR 48270; 73 FR 48275; 73 FR 51336; 75 FR 14656; 75 FR 25918; 75 FR 28684; 75 FR 39729; 75 FR 44051; 75 FR 50799; 75 FR 52062;). Each of these 35 applicants has requested renewal of the exemption and has submitted evidence showing that the vision in the better eye continues to meet the requirement specified at 49 CFR 391.41(b)(10) and that the vision impairment is stable. In addition, a review of each record of safety while driving with the respective vision deficiencies over the past two years indicates each applicant continues to meet the vision exemption requirements.

These factors provide an adequate basis for predicting each driver's ability to continue to drive safely in interstate commerce. Therefore, FMCSA concludes that extending the exemption for each renewal applicant for a period of two years is likely to achieve a level of safety equal to that existing without the exemption.

Request for Comments

FMCSA will review comments received at any time concerning a particular driver's safety record and determine if the continuation of the exemption is consistent with the requirements at 49 U.S.C. 31136(e) and 31315. However, FMCSA requests that interested parties with specific data concerning the safety records of these drivers submit comments by September 28, 2012.

FMCSA believes that the requirements for a renewal of an exemption under 49 U.S.C. 31136(e) and 31315 can be satisfied by initially granting the renewal and then requesting and evaluating, if needed, subsequent comments submitted by interested parties. As indicated above, the Agency previously published notices of final disposition announcing its decision to exempt these 35 individuals from the vision requirement in 49 CFR 391.41(b)(10). The final decision to grant an exemption to each of these individuals was made on the merits of each case and made only after careful consideration of the comments received to its notices of applications. The notices of applications stated in detail the qualifications, experience, and medical condition of each applicant for an exemption from the vision requirements. That information is available by consulting the above cited **Federal Register** publications.

Interested parties or organizations possessing information that would otherwise show that any, or all, of these drivers are not currently achieving the statutory level of safety should immediately notify FMCSA. The Agency will evaluate any adverse evidence submitted and, if safety is being compromised or if continuation of the exemption would not be consistent with the goals and objectives of 49 U.S.C. 31136(e) and 31315, FMCSA will take immediate steps to revoke the exemption of a driver.

Issued on: August 20, 2012.

Larry W. Minor,

Associate Administrator for Policy.

[FR Doc. 2012–21213 Filed 8–28–12; 8:45 am]

BILLING CODE 4910–EX–P

DEPARTMENT OF TRANSPORTATION

Federal Motor Carrier Safety Administration

[Docket No. FMCSA–2012–0161]

Qualification of Drivers; Exemption Applications; Vision

AGENCY: Federal Motor Carrier Safety Administration (FMCSA), DOT.

ACTION: Notice of final disposition.

SUMMARY: FMCSA announces its decision to exempt 13 individuals from the vision requirement in the Federal Motor Carrier Safety Regulations (FMCSRs). They are unable to meet the vision requirement in one eye for various reasons. The exemptions will enable these individuals to operate commercial motor vehicles (CMVs) in interstate commerce without meeting the prescribed vision requirement in one eye. The Agency has concluded that granting these exemptions will provide a level of safety that is equivalent to or greater than the level of safety maintained without the exemptions for these CMV drivers.

DATES: The exemptions are effective August 29, 2012. The exemptions expire on August 29, 2014.

FOR FURTHER INFORMATION CONTACT: Elaine M. Papp, Chief, Medical Programs Division, (202)–366–4001, *fmcsamedical@dot.gov,* FMCSA, Department of Transportation, 1200 New Jersey Avenue SE., Room W64–224, Washington, DC 20590–0001. Office hours are from 8:30 a.m. to 5 p.m. Monday through Friday, except Federal holidays.

SUPPLEMENTARY INFORMATION:

Electronic Access

You may see all the comments online through the Federal Document Management System (FDMS) at *http://www.regulations.gov*.

Docket: For access to the docket to read background documents or comments, go to *http://www.regulations.gov* at any time or Room W12–140 on the ground level of the West Building, 1200 New Jersey Avenue SE., Washington, DC, between 9 a.m. and 5 p.m., Monday through Friday, except Federal holidays. The FDMS is available 24 hours each day, 365 days each year. If you want acknowledgement that we received your comments, please include a self-addressed, stamped envelope or postcard or print the acknowledgement page that appears after submitting comments on-line.

Privacy Act: Anyone may search the electronic form of all comments received into any of our dockets by the name of the individual submitting the comment (or of the person signing the comment, if submitted on behalf of an association, business, labor union, etc.). You may review DOT's Privacy Act Statement for the FDMS published in the **Federal Register** on January 17, 2008 (73 FR 3316), or you may visit *http://edocket.access.gpo.gov/2008/pdf/E8-785.pdf*.

Background

On July 16, 2012, FMCSA published a notice of receipt of exemption applications from certain individuals, and requested comments from the public (77 FR 41879). That notice listed 13 applicants' case histories. The 13 individuals applied for exemptions from the vision requirement in 49 CFR 391.41(b)(10), for drivers who operate CMVs in interstate commerce.

Under 49 U.S.C. 31136(e) and 31315, FMCSA may grant an exemption for a 2-year period if it finds ''such exemption would likely achieve a level of safety that is equivalent to or greater than the level that would be achieved absent such exemption.'' The statute also allows the Agency to renew exemptions at the end of the 2-year period. Accordingly, FMCSA has evaluated the 13 applications on their merits and made a determination to grant exemptions to each of them.

Vision and Driving Experience of the Applicants

The vision requirement in the FMCSRs provides:

A person is physically qualified to drive a commercial motor vehicle if that person has distant visual acuity of at least 20/40 (Snellen) in each eye without corrective lenses or visual acuity separately corrected to 20/40 (Snellen) or better with corrective lenses, distant binocular acuity of a least 20/40 (Snellen) in both eyes with or without corrective lenses, field of vision of at least 70° in the horizontal meridian in each eye, and the ability to recognize the colors of traffic signals and devices showing requirement red, green, and amber (49 CFR 391.41(b)(10)).

FMCSA recognizes that some drivers do not meet the vision requirement but have adapted their driving to accommodate their vision limitation and demonstrated their ability to drive safely. The 13 exemption applicants listed in this notice are in this category. They are unable to meet the vision requirement in one eye for various reasons, including retinal detachment, acute zonal occult outer retinopathy, central scotoma, enucleation, amblyopia, macular scarring, strabismus, loss of vision, and corneal scarring. In most cases, their eye conditions were not recently developed. Five of the applicants were either born with their vision impairments or have had them since childhood.

The eight individuals that sustained their vision conditions as adults have had it for a period of 5 to 28 years.

Although each applicant has one eye which does not meet the vision requirement in 49 CFR 391.41(b)(10), each has at least 20/40 corrected vision in the other eye, and in a doctor's opinion, has sufficient vision to perform all the tasks necessary to operate a CMV. Doctors' opinions are supported by the applicants' possession of valid commercial driver's licenses (CDLs) or non-CDLs to operate CMVs. Before issuing CDLs, States subject drivers to knowledge and skills tests designed to evaluate their qualifications to operate a CMV.

All of these applicants satisfied the testing requirements for their State of residence. By meeting State licensing requirements, the applicants demonstrated their ability to operate a CMV, with their limited vision, to the satisfaction of the State.

While possessing a valid CDL or non-CDL, these 13 drivers have been authorized to drive a CMV in intrastate commerce, even though their vision disqualified them from driving in interstate commerce. They have driven CMVs with their limited vision for careers ranging from 3 to 43 years. In the past 3 years, two of the drivers were involved in crashes, and four of the drivers were convicted of moving violations in a CMV.

The qualifications, experience, and medical condition of each applicant were stated and discussed in detail in the July 16, 2012 notice (77 FR 41879).

Basis for Exemption Determination

Under 49 U.S.C. 31136(e) and 31315, FMCSA may grant an exemption from the vision requirement in 49 CFR 391.41(b)(10) if the exemption is likely to achieve an equivalent or greater level of safety than would be achieved without the exemption. Without the exemption, applicants will continue to be restricted to intrastate driving. With the exemption, applicants can drive in interstate commerce. Thus, our analysis focuses on whether an equal or greater

level of safety is likely to be achieved by permitting each of these drivers to drive in interstate commerce as opposed to restricting him or her to driving in intrastate commerce.

To evaluate the effect of these exemptions on safety, FMCSA considered the medical reports about the applicants' vision as well as their driving records and experience with the vision deficiency.

To qualify for an exemption from the vision requirement, FMCSA requires a person to present verifiable evidence that he/she has driven a commercial vehicle safely with the vision deficiency for the past 3 years. Recent driving performance is especially important in evaluating future safety, according to several research studies designed to correlate past and future driving performance. Results of these studies support the principle that the best predictor of future performance by a driver is his/her past record of crashes and traffic violations. Copies of the studies may be found at Docket Number FMCSA–1998–3637.

We believe we can properly apply the principle to monocular drivers, because data from the Federal Highway Administration's (FHWA) former waiver study program clearly demonstrate the driving performance of experienced monocular drivers in the program is better than that of all CMV drivers collectively (See 61 FR 13338, 13345, March 26, 1996). The fact that experienced monocular drivers demonstrated safe driving records in the waiver program supports a conclusion that other monocular drivers, meeting the same qualifying conditions as those required by the waiver program, are also likely to have adapted to their vision deficiency and will continue to operate safely.

The first major research correlating past and future performance was done in England by Greenwood and Yule in 1920. Subsequent studies, building on that model, concluded that crash rates for the same individual exposed to certain risks for two different time periods vary only slightly (See Bates and Neyman, University of California Publications in Statistics, April 1952). Other studies demonstrated theories of predicting crash proneness from crash history coupled with other factors. These factors—such as age, sex, geographic location, mileage driven and conviction history—are used every day by insurance companies and motor vehicle bureaus to predict the probability of an individual experiencing future crashes (See Weber, Donald C., ''Accident Rate Potential: An Application of Multiple Regression Analysis of a Poisson Process,'' Journal of American Statistical Association, June 1971). A 1964 California Driver Record Study prepared by the California Department of Motor Vehicles concluded that the best overall crash predictor for both concurrent and nonconcurrent events is the number of single convictions. This study used 3 consecutive years of data, comparing the experiences of drivers in the first 2 years with their experiences in the final year.

Applying principles from these studies to the past 3-year record of the 13 applicants, two of the drivers were involved in crashes, and four were convicted of moving violations in a CMV. All the applicants achieved a record of safety while driving with their vision impairment, demonstrating the likelihood that they have adapted their driving skills to accommodate their condition. As the applicants' ample driving histories with their vision deficiencies are good predictors of future performance, FMCSA concludes their ability to drive safely can be projected into the future.

We believe that the applicants' intrastate driving experience and history provide an adequate basis for predicting their ability to drive safely in interstate commerce. Intrastate driving, like interstate operations, involves substantial driving on highways on the interstate system and on other roads built to interstate standards. Moreover, driving in congested urban areas exposes the driver to more pedestrian and vehicular traffic than exists on interstate highways. Faster reaction to traffic and traffic signals is generally required because distances between them are more compact. These conditions tax visual capacity and driver response just as intensely as interstate driving conditions. The veteran drivers in this proceeding have operated CMVs safely under those conditions for at least 3 years, most for much longer. Their experience and driving records lead us to believe that each applicant is capable of operating in interstate commerce as safely as he/she has been performing in intrastate commerce. Consequently, FMCSA finds that exempting these applicants from the vision requirement in 49 CFR 391.41(b)(10) is likely to achieve a level of safety equal to that existing without the exemption. For this reason, the Agency is granting the exemptions for the 2-year period allowed by 49 U.S.C. 31136(e) and 31315 to the 13 applicants listed in the notice of July 16, 2012 (77 FR 41879).

We recognize that the vision of an applicant may change and affect his/her ability to operate a CMV as safely as in the past. As a condition of the exemption, therefore, FMCSA will impose requirements on the 13 individuals consistent with the grandfathering provisions applied to drivers who participated in the Agency's vision waiver program.

Those requirements are found at 49 CFR 391.64(b) and include the following:

(1) That each individual be physically examined every year (a) by an ophthalmologist or optometrist who attests that the vision in the better eye continues to meet the requirement in 49 CFR 391.41(b)(10) and (b) by a medical examiner who attests that the individual is otherwise physically qualified under 49 CFR 391.41; (2) that each individual provide a copy of the ophthalmologist's or optometrist's report to the medical examiner at the time of the annual medical examination; and (3) that each individual provide a copy of the annual medical certification to the employer for retention in the driver's qualification file, or keep a copy in his/her driver's qualification file if he/she is self-employed. The driver must have a copy of the certification when driving, for presentation to a duly authorized Federal, State, or local enforcement official.

Discussion of Comments

FMCSA received two comments in this proceeding. The comments were considered and discussed below.

The first individual, Darshan Patel, was in favor of granting the Federal vision exemption to all of the drivers listed in this notice.

The second individual, Khalia Spencer, was cautionary and recommended additional stipulations to ensure that the drivers remain qualified and the program safe.

In response to this comment, FMCSA's exemption process supports drivers with vision deficiencies who seek to operate in interstate commerce. In addition, FMCSA relies on the expert medical opinion of the optometrist or ophthalmologist, who are required to attest that the vision in the better eye continues to meet the standard in 49 CFR 391.41(b)(10), and the medical examiner, who is required to attest that the individual is otherwise physically qualified under 49 CFR 391.41. Until the Agency issues a Final Rule, however, drivers with vision deficiencies must continue to apply for exemptions from FMCSA, and request renewals of such exemptions. FMCSA will grant exemptions only to those applicants who meet the specific conditions and comply with all the requirements of the exemption.

Conclusion

Based upon its evaluation of the 13 exemption applications, FMCSA exempts Joseph E. Brunette (CA), William C. Christy (FL), Anthony A. Gibson, Jr. (IL), Rickey W. Goins (TN), Michael J. Hoffarth (WA), Boyd M. Kinzer, Jr. (TN), Jason N. Moore (VA), Dennis M. Rubeck (WY), Leon F. Stephens (CO), Clayton L. Schroeder (MN), James C. Sharp (PA), Ronald J. VanHoof (WA), and Scott C. Westphal (MN) from the vision requirement in 49 CFR 391.41(b)(10), subject to the requirements cited above (49 CFR 391.64(b)).

In accordance with 49 U.S.C. 31136(e) and 31315, each exemption will be valid for 2 years unless revoked earlier by FMCSA. The exemption will be revoked if: (1) The person fails to comply with the terms and conditions of the exemption; (2) the exemption has resulted in a lower level of safety than was maintained before it was granted; or (3) continuation of the exemption would not be consistent with the goals and objectives of 49 U.S.C. 31136 and 31315.

If the exemption is still effective at the end of the 2-year period, the person may apply to FMCSA for a renewal under procedures in effect at that time.

Issued on: August 20, 2012.

Larry W. Minor,

Associate Administrator for Policy.

[FR Doc. 2012–21229 Filed 8–28–12; 8:45 am]

BILLING CODE 4910–EX–P

DEPARTMENT OF TRANSPORTATION

Federal Railroad Administration

[Docket No. FRA–2000–7257Notice No. 69]

Railroad Safety Advisory Committee; Notice of Meeting

AGENCY: Federal Railroad Administration (FRA), Department of Transportation (DOT).

ACTION: Announcement of Railroad Safety Advisory Committee (RSAC) meeting.

SUMMARY: FRA announces the forty-seventh meeting of the RSAC, a Federal Advisory Committee that develops railroad safety regulations through a consensus process. The RSAC meeting topics will include opening remarks from the FRA Administrator, and status reports will be provided by the Critical Incident, Fatigue Management, and Risk Reduction Working Groups. Status reports will also be provided by the Engineering and System Safety Task Forces, and a presentation on headwear will be provided. This agenda is subject to change, including the possible addition of further proposed tasks under the Rail Safety Improvement Act of 2008.

DATES: The RSAC meeting is scheduled to commence at 9:30 a.m. on Thursday, September 27, 2012, and will adjourn by 4:30 p.m.

ADDRESSES: The RSAC meeting will be held at the National Housing Center, 1201 15th Street NW., Washington, DC 20005. The meeting is open to the public on a first-come, first-served basis and is accessible to individuals with disabilities. Sign and oral interpretation can be made available if requested 10 calendar days before the meeting.

FOR FURTHER INFORMATION CONTACT: Mr. Larry Woolverton, RSAC Administrative Officer/Coordinator, FRA, 1200 New Jersey Avenue SE., Mailstop 25, Washington, DC 20590, (202) 493–6212; or Mr. Robert Lauby, Deputy Associate Administrator for Regulatory and Legislative Operations, FRA, 1200 New Jersey Avenue SE., Mailstop 25, Washington, DC 20590, (202) 493–6474.

SUPPLEMENTARY INFORMATION: Pursuant to Section 10(a)(2) of the Federal Advisory Committee Act (Pub. L. 92–463), FRA is giving notice of a meeting of the Railroad Safety Advisory Committee (RSAC). The RSAC was established to provide advice and recommendations to FRA on railroad safety matters. The RSAC is composed of 54 voting representatives from 32 member organizations, representing various rail industry perspectives. In addition, there are non-voting advisory representatives from the agencies with railroad safety regulatory responsibility in Canada and Mexico, the National Transportation Safety Board, and the Federal Transit Administration. The diversity of the Committee ensures the requisite range of views and expertise necessary to discharge its responsibilities. See the RSAC Web site for details on prior RSAC activities and pending tasks: *http://rsac.fra.dot.gov/.* Please refer to the notice published in the **Federal Register** on March 11, 1996 (61 FR 9740), for additional information about the RSAC.

Issued in Washington, DC, on August 23, 2012.

Robert C. Lauby,

Deputy Associate Administrator for Regulatory and Legislative Operations.

[FR Doc. 2012–21265 Filed 8–28–12; 8:45 am]

BILLING CODE 4910–06–P

DEPARTMENT OF TRANSPORTATION

National Highway Traffic Safety Administration

Petition for Exemption From the Vehicle Theft Prevention Standard; BMW of North America, LLC

AGENCY: National Highway Traffic Safety Administration (NHTSA), Department of Transportation (DOT).

ACTION: Grant of petition for exemption.

SUMMARY: This document grants in full the BMW of North America, LLC (BMW) petition for exemption of the Carline 4 vehicle line in accordance with 49 CFR Part 543, *Exemption from the Theft Prevention Standard.* This petition is granted because the agency has determined that the antitheft device to be placed on the line as standard equipment is likely to be as effective in reducing and deterring motor vehicle theft as compliance with the parts-marking requirements of the Theft Prevention Standard (49 CFR part 541). BMW requested confidential treatment for specific information in its petition that the agency will address by separate letter.

DATES: The exemption granted by this notice is effective beginning with the 2014 model year (MY).

FOR FURTHER INFORMATION CONTACT: Ms. Carlita Ballard, Office of International Policy, Fuel Economy and Consumer Programs, National Highway Traffic Safety Administration, 1200 New Jersey Avenue SE., West Building, Room W43–439, Washington, DC 20590. Ms. Ballard's telephone number is (202) 366–5222. Her fax number is (202) 493–2990.

SUPPLEMENTARY INFORMATION: In a petition dated June 4, 2012, BMW requested an exemption from the parts-marking requirements of the Theft Prevention Standard (49 CFR Part 541) for the Carline 4 vehicle line beginning with MY 2014. The petition requested exemption from parts-marking pursuant to 49 CFR Part 543, *Exemption from Vehicle Theft Prevention Standard,* based on the installation of an antitheft device as standard equipment for an entire vehicle line.

Under § 543.5(a), a manufacturer may petition NHTSA to grant an exemption for one vehicle line per model year. In its petition, BMW provided a detailed description and diagram of the identity, design, and location of the components of the antitheft device for its Carline 4 vehicle line. BMW stated that all Carline 4 vehicles will be equipped with a passive antitheft device as standard equipment beginning with MY 2014.

The immobilizer device is automatically activated when the engine is shut off and the vehicle key is removed from the ignition lock cylinder. Key features of the antitheft device will include a key with a transponder, loop antenna (coil), engine control unit (DME/DDE) with encoded start release input, an electronically-coded vehicle immobilizer/car access system (EWS/CAS) control unit and a passive immobilizer. BMW's submission is considered a complete petition as required by 49 CFR 543.7, in that it meets the general requirements contained in § 543.5 and the specific content requirements of § 543.6.

BMW stated that the EWS immobilizer device prevents the vehicle from being driven away under its own engine power. Its transponder contains a chip which is integrated in the key, powered by a battery and consists of a transmitter/receiver which communicates with the EWS control unit. The EWS control unit provides the interface to the loop antenna (coil), engine control unit and starter. The ignition and fuel supply are only released when a correct coded release signal has been sent by the EWS control unit to allow the vehicle to start. When the EWS control unit has sent a correct release signal, and after the initial starting value, the release signal becomes a rolling, ever-changing, random code that is stored in the DME/DDE and EWS (CAS control modules). The DME/DDE must identify the release signal and only then will the ignition signal and fuel supply be released. Deactivation of the device cannot be carried out with the mechanical key, but must occur electronically. The vehicle is also equipped with a central-locking system that can be operated to lock and unlock all doors or to unlock only the driver's door, preventing forced entry into the vehicle through the passenger doors. The vehicle can be further secured by locking the doors and hood using either the key lock cylinder on the driver's door or the remote frequency remote control. BMW stated that the frequency for the remote control constantly changes to prevent an unauthorized person from opening the vehicle by intercepting the signals of its remote control. BMW also stated that the proposed antitheft device does not provide any visible or audible indication of unauthorized entry.

BMW compared the effectiveness of its antitheft device with devices which NHTSA has previously determined to be as effective in reducing and deterring motor vehicle theft as would compliance with the parts-marking requirements of Part 541. The antitheft device that BMW intends to install on its Carline 4 vehicle line for MY 2014 is the same device that BMW has installed on its X1, X3 and X5 vehicle lines, as well as its Carline 1, 3, 5, 6, 7, Z4, and MINI vehicle lines. BMW asserts that theft data have indicated a decline in theft rates for vehicle lines that have been equipped with antitheft devices similar to that which it proposes to install on the Carline 4 vehicle line. Specifically, BMW stated that for MY/CY 2009, the agency's data show that theft rates for its lines are: 0.3926 (1-series), 0.5216 (3-series), 0.4098 (5-series), 1.6529 (6-series), 0.6617 (7-series), 0.3671 (X3), 0.2750 (Z4/M)), and 0.1155 (MINI Cooper). Using an average of 3 MYs data (2007–2009), theft rates for those lines are: 0.2383, 0.7029, 0.7988, 2.3463, 2.0683, 0.5146, 0.5309 and 0.2386 respectively.

In addressing the specific content requirements of 543.6, BMW provided information on the reliability and durability of its device. To ensure reliability and durability of the device, BMW conducted tests based on its own specified standards and believes that the device is reliable and durable since the device complied with its specified requirements for each test. BMW provided a detailed list of the tests conducted in its June 2012 request for exemption from the parts-marking requirements. Further assuring the reliability and durability of the Carline 4 antitheft device, BMW notes that the mechanical keys for the Carline 4 are unique. A special key blank, a special key cutting machine and the vehicle's unique code are needed to duplicate a key. BMW stated that new keys will only be issued to authorized persons.

Based on the supporting evidence submitted by BMW, the agency believes that the antitheft device for the BMW Carline 4 vehicle line is likely to be as effective in reducing and deterring motor vehicle theft as compliance with the parts-marking requirements of the Theft Prevention Standard (49 CFR Part 541). The agency concludes that the device will provide four of the five types of performance listed in § 543.6(a)(3): Promoting activation; preventing defeat or circumvention of the device by unauthorized persons; preventing operation of the vehicle by unauthorized entrants; and ensuring the reliability and durability of the device.

Pursuant to 49 U.S.C. 33106 and 49 CFR 543.7(b), the agency grants a petition for exemption from the parts-marking requirements of Part 541, either in whole or in part, if it determines that, based upon supporting evidence, the standard equipment antitheft device is likely to be as effective in reducing and deterring motor vehicle theft as compliance with the parts-marking requirements of Part 541. The agency finds that BMW has provided adequate reasons for its belief that the antitheft device for the Carline 4 vehicle line is likely to be as effective in reducing and deterring motor vehicle theft as compliance with the parts-marking requirements of the Theft Prevention Standard (49 CFR Part 541). This conclusion is based on the information BMW provided about its device.

For the foregoing reasons, the agency hereby grants in full BMW's petition for exemption for the MY 2014 Carline 4 vehicle line from the parts-marking requirements of 49 CFR Part 541. The agency notes that 49 CFR Part 541, Appendix A–1, identifies those lines that are exempted from the Theft Prevention Standard for a given MY. 49 CFR Part 543.7(f) contains publication requirements incident to the disposition of all Part 543 petitions. Advanced listing, including the release of future product nameplates, the beginning model year for which the petition is granted and a general description of the antitheft device is necessary in order to notify law enforcement agencies of new vehicle lines exempted from the parts-marking requirements of the Theft Prevention Standard.

If BMW decides not to use the exemption for this line, it must formally notify the agency. If such a decision is made, the line must be fully marked as required by 49 CFR Parts 541.5 and 541.6 (marking of major component parts and replacement parts).

NHTSA notes that if BMW wishes in the future to modify the device on which this exemption is based, the company may have to submit a petition to modify the exemption. Part 543.7(d) states that a Part 543 exemption applies only to vehicles that belong to a line exempted under this part and equipped with the anti-theft device on which the line's exemption is based. Further, § 543.9(c)(2) provides for the submission of petitions ''to modify an exemption to permit the use of an antitheft device similar to but differing from the one specified in that exemption.''

The agency wishes to minimize the administrative burden that Part 543.9(c)(2) could place on exempted vehicle manufacturers and itself. The agency did not intend Part 543 to require the submission of a modification petition for every change to the components or design of an antitheft device. The significance of many such changes could be *de minimis.* Therefore, NHTSA suggests that if the manufacturer contemplates making any changes the effects of which might be

characterized as *de minimis,* it should consult the agency before preparing and submitting a petition to modify.

Authority: 49 U.S.C. 33106; delegation of authority at 49 CFR 1.50.

Issued on: August 21, 2012.

Mary L. Versailles,

Senior Policy Advisor for International Policy, Fuel Economy and Consumer Programs.

[FR Doc. 2012–21266 Filed 8–28–12; 8:45 am]

BILLING CODE 4910–59–P

FEDERAL REGISTER

Vol. 77 Wednesday,

No. 168 August 29, 2012

Part II

Department of Housing and Urban Development

Federal Property Suitable as Facilities To Assist the Homeless; Notice

DEPARTMENT OF HOUSING AND URBAN DEVELOPMENT

[Docket No. FR–5601–N–32]

Federal Property Suitable as Facilities To Assist the Homeless

AGENCY: Office of the Assistant Secretary for Community Planning and Development, HUD.

ACTION: Notice.

SUMMARY: This Notice identifies unutilized, underutilized, excess, and surplus Federal property reviewed by HUD for suitability for use to assist the homeless.

FOR FURTHER INFORMATION CONTACT: Juanita Perry, Department of Housing and Urban Development, 451 Seventh Street SW., Room 7266, Washington, DC 20410; telephone (202) 402–3970; TTY number for the hearing- and speech-impaired (202) 708–2565 (these telephone numbers are not toll-free), or call the toll-free Title V information line at 800–927–7588.

SUPPLEMENTARY INFORMATION: In accordance with 24 CFR part 581 and section 501 of the Stewart B. McKinney Homeless Assistance Act (42 U.S.C. 11411), as amended, HUD is publishing this Notice to identify Federal buildings and other real property that HUD has reviewed for suitability for use to assist the homeless. The properties were reviewed using information provided to HUD by Federal landholding agencies regarding unutilized and underutilized buildings and real property controlled by such agencies or by GSA regarding its inventory of excess or surplus Federal property. This Notice is also published in order to comply with the December 12, 1988 Court Order in *National Coalition for the Homeless* v. *Veterans Administration,* No. 88–2503–OG (D.D.C.).

Properties reviewed are listed in this Notice according to the following categories: Suitable/available, suitable/unavailable, suitable/to be excess, and unsuitable. The properties listed in the three suitable categories have been reviewed by the landholding agencies, and each agency has transmitted to HUD: (1) Its intention to make the property available for use to assist the homeless, (2) its intention to declare the property excess to the agency's needs, or (3) a statement of the reasons that the property cannot be declared excess or made available for use as facilities to assist the homeless.

Properties listed as suitable/available will be available exclusively for homeless use for a period of 60 days from the date of this Notice. Where property is described as for ''off-site use only'' recipients of the property will be required to relocate the building to their own site at their own expense. Homeless assistance providers interested in any such property should send a written expression of interest to HHS, addressed to Theresa Ritta, Division of Property Management, Program Support Center, HHS, room 5B–17, 5600 Fishers Lane, Rockville, MD 20857; (301) 443–2265. (This is not a toll-free number.) HHS will mail to the interested provider an application packet, which will include instructions for completing the application. In order to maximize the opportunity to utilize a suitable property, providers should submit their written expressions of interest as soon as possible. For complete details concerning the processing of applications, the reader is encouraged to refer to the interim rule governing this program, 24 CFR part 581.

For properties listed as suitable/to be excess, that property may, if subsequently accepted as excess by GSA, be made available for use by the homeless in accordance with applicable law, subject to screening for other Federal use. At the appropriate time, HUD will publish the property in a Notice showing it as either suitable/available or suitable/unavailable.

For properties listed as suitable/unavailable, the landholding agency has decided that the property cannot be declared excess or made available for use to assist the homeless, and the property will not be available.

Properties listed as unsuitable will not be made available for any other purpose for 20 days from the date of this Notice. Homeless assistance providers interested in a review by HUD of the determination of unsuitability should call the toll free information line at 1–800–927–7588 for detailed instructions or write a letter to Ann Marie Oliva at the address listed at the beginning of this Notice. Included in the request for review should be the property address (including zip code), the date of publication in the **Federal Register**, the landholding agency, and the property number.

For more information regarding particular properties identified in this Notice (*i.e.* , acreage, floor plan, existing sanitary facilities, exact street address), providers should contact the appropriate landholding agencies at the following addresses: ARMY: Ms. Veronica Rines, Department of the Army, Office of the Assistant Chief of Staff for Installation Management, DAIM-ZS, Room 8536, 2511 Jefferson Davis Hwy, Arlington, VA 22202; (These are not toll-free numbers).

Dated: August 9, 2012.

Ann Marie Oliva,

Deputy Assistant Secretary for Special Needs (Acting).

TITLE V, FEDERAL SURPLUS PROPERTY PROGRAM FEDERAL REGISTER REPORT FOR 08/17/2012

Suitable/Available Properties

Building

Alabama

Bldg. 8404
Redstone Arsenal
Redstone Arsenal AL 35898
Landholding Agency: Army
Property Number: 21201140050
Status: Unutilized
Comments: Off-site removal only; 430 sq. ft.; current use: Explosive testing; needs extensive repairs; possible asbestos and lead base paint

C1301
Ft. McClellan
Ft. McClellan AL 36205
Landholding Agency: Army
Property Number: 21201220017
Status: Excess
Comments: Off-site removal only; 2,232 sf.; barracks; extensive repairs needed; secured area; need prior approval to access property

19 Bldgs.
Redstone Arsenal
Redstone Arsenal AL 35898
Landholding Agency: Army
Property Number: 21201220032
Status: Unutilized
Directions: 5450, 5655, 5658, 5671, 5672, 5673, 7289, 7355, 7368B, 7371A, 7371B, 7371C, 7661, 4180, 4823, 5689, 5690, 5695, 5697
Comments: Off-site removal only; sf varies; usage varies; very poor conditions; contamination possible; extensive repairs needed; secured area; prior approval required to access property

21 Bldgs.
Redstone Arsenal
Redstone Arsenal AL 35898
Landholding Agency: Army
Property Number: 21201220034
Status: Unutilized
Directions: 1416, 1416A, 2575, 2576, 2592, 3203, 3211, 3212, 3213, 3214, 3215, 3411A, 3453, 3453A, 3476, 3554, 3641, 3789, 5445, 5446, 5449
Comments: Off-site removal only; sf varies; usage varies; very poor conditions; contamination possible; extensive repairs needed; secured area; prior approval required to access property

23 Buildings
Redstone Arsenal
Redstone Arsenal AL 35898
Landholding Agency: Army
Property Number: 21201220053
Status: Unutilized
Directions: 1418, 1417, 1413, 1400, 1419, 1420, 1423, 1424, 1426, 1427, 1428, 1429, 1430, 1433, 1434, 1435, 1436, 1437, 3410, 3411, 3412, 3413, 7310

Comments: Off-site removal only; sf. varies; usage varies; extensive repairs needed; secured area; need prior approval to access properties

2 Buildings
Ft. Rucker
Ft. Rucker AL 36352
Landholding Agency: Army
Property Number: 21201230048
Status: Unutilized
Directions: 26305, 40132
Comments: Off-site removal only; sf. varies; use varies; fair conditions; restricted area; need permission to access & remove; contact Army for further details

Alaska

Bldg. 00001
Kiana Natl Guard Armory
Kiana AK 99749
Landholding Agency: Army
Property Number: 21200340075
Status: Excess
GSA Number:
Comments: 1200 sq. ft., butler bldg., needs repair, off-site use only

Bldg. 00001
Holy Cross Armory
High Cross AK 99602
Landholding Agency: Army
Property Number: 21200710051
Status: Excess
Comments: 1200 sq. ft. armory, off-site use only

11 Bldgs.
Ft. Greely
Ft. Greely AK 99731
Landholding Agency: Army
Property Number: 21201220029
Status: Unutilized
Directions: 713, 714, 875, 876, 887, 888, 910, 911, 912, 913
Comments: Off-site removal only; sf varies; housing; fair to poor conditions; asbestos and lead indentified; need repairs; need prior approval to access property

B–00877
Fort Greely
Ft. Greely AK 99731
Landholding Agency: Army
Property Number: 21201220052
Status: Unutilized
Comments: Off-site removal only; 14, 824 sf.; family housing; poor conditions; need repairs; asbestos & lead identified; secured area; prior approval needed to access & relocate

6 Buildings
Ft.Greely
Ft. Greely AK 99731
Landholding Agency: Army
Property Number: 21201230008
Status: Unutilized
Directions: 350, 833, 835, 878, XSKIA, 834
Comments: Off-site removal only; sq. ft. varies; poor conditions—need repairs; some bldgs. have asbestos & lead; contact Army for specific details

Arizona

Bldg. S–306
Yuma Proving Ground
Yuma AZ 85365–9104
Landholding Agency: Army
Property Number: 21199420346
Status: Unutilized
Directions:
Comments: 4103 sq. ft., 2-story, needs major rehab, off-site use only

Bldg. 503, Yuma Proving Ground
null
Yuma AZ 85365–9104
Landholding Agency: Army
Property Number: 21199520073
Status: Underutilized
Directions:
Comments: 3789 sq. ft., 2-story, major structural changes required to meet floor loading code requirements, presence of asbestos, off-site use only

Bldg. 43002
Fort Huachuca
Cochise AZ 85613–7010
Landholding Agency: Army
Property Number: 21200440066
Status: Excess
Comments: 23, 152 sq. ft., presence of asbestos/lead paint, most recent use—dining, off-site use only

Bldg. 90551
Fort Huachuca
Cochise AZ 85613
Landholding Agency: Army
Property Number: 21200920001
Status: Excess
Comments: 1270 sq. ft., most recent use—office, off-site use only

Arkansas

7 Bldgs.
Pine Bluff Arsenal
Pine Bluff AR 71602
Landholding Agency: Army
Property Number: 21201140055
Status: Unutilized
Directions: 57240, 57210, 57160, 57150, 57120, 5743, 5739
Comments: Off-site removal only; sq. ft. varies; current use: lab/test bldg.

Bldg. 57260
Pine Bluff Arsenal
Pine Bluff AR 71602
Landholding Agency: Army
Property Number: 21201140057
Status: Unutilized
Comments: Off-site removal only; 9,474 sq. ft.; current use: CHM EQ/MAT Bldg.

Bldg. 16440
Pine Bluff Arsenal
Pine Bluff AR 71602
Landholding Agency: Army
Property Number: 21201210095
Status: Unutilized
Comments: Off-site removal; 1,660 sf.; current use: office; extensive mold damage; needs major repairs

California

Bldgs. 18026, 18028
Camp Roberts
Monterey CA 93451–5000
Landholding Agency: Army
Property Number: 21200130081
Status: Excess
GSA Number:
Comments: 2,024 sq. ft., concrete, poor condition, off-site use only

T4243
Ord Military Community
Seaside CA 93955
Landholding Agency: Army
Property Number: 21201220013
Status: Unutilized
Comments: 2,080 sf.; office space; extremely poor conditions; extensive repairs needed; asbestos & lead identified; remediation needed

19 Bldgs.
Ft. Irwin
Ft. Irwin CA 92310
Landholding Agency: Army
Property Number: 21201220027
Status: Unutilized
Directions: 243, 383, 548, 550, 565, 566, 569, 571, 575, 577, 582, 595, 596, 859, 867, 868, 931, 940, 6201
Comments: Off-site removal only; sf varies; office space; fair to poor conditions; secured area; prior approval to access property

258
7th Division Rd.
Monterey CA 93928
Landholding Agency: Army
Property Number: 21201230002
Status: Unutilized
Directions: Hunter Liggett, Fort
Comments: Off-site removal only; 192 sf.; use: storage; transferee required to get real estate document authorizing access; secured area; must contact Directorate of Public Works to arrange to access property

5 Buildings
JFTB
Los Alamitos CA 90720
Landholding Agency: Army
Property Number: 21201230043
Status: Excess
Directions: 148, 149, 261, 280, 281
Comments: Off-site removal only; sf. varies; use: storage; poor conditions; contamination; permission required to access property to remove of installation

Colorado

Bldg. 00127
Pueblo Chemical Depot
Pueblo CO 81006
Landholding Agency: Army
Property Number: 21200420179
Status: Unutilized
Comments: 8067 sq. ft., presence of asbestos, most recent use—barracks, off-site use only

Georgia

Bldg. 2593
Fort Benning
Ft. Benning GA 31905
Landholding Agency: Army
Property Number: 21199720167
Status: Unutilized
Directions:
Comments: 13644 sq. ft., needs rehab, most recent use—parachute shop, off-site use only

Bldg. 4232
Fort Benning
GA 31905
Landholding Agency: Army
Property Number: 21199830291
Status: Unutilized
Directions:
Comments: 3720 sq. ft., needs rehab, most recent use—maint. bay, off-site use only

Bldgs. 5974–5978
Fort Benning
Ft. Benning GA 31905
Landholding Agency: Army

Property Number: 21199930135
Status: Unutilized
GSA Number:
Comments: 400 sq. ft., most recent use—storage, off-site use only

Bldg. 5993
Fort Benning
Ft. Benning GA 31905
Landholding Agency: Army
Property Number: 21199930136
Status: Unutilized
GSA Number:
Comments: 960 sq. ft., most recent use—storage, off-site use only

Bldg. 00100
Hunter Army Airfield
Chatham GA 31409
Landholding Agency: Army
Property Number: 21200740052
Status: Excess
Comments: 10893 sq. ft., most recent use—battalion hdqts., off-site use only

Bldg. 00129
Hunter Army Airfield
Chatham GA 31409
Landholding Agency: Army
Property Number: 21200740053
Status: Excess
Comments: 4815 sq. ft., presence of asbestos, most recent use—religious education facility, off-site use only

Bldg. 00145
Hunter Army Airfield
Chatham GA 31409
Landholding Agency: Army
Property Number: 21200740054
Status: Excess
Comments: 11590 sq. ft., presence of asbestos, most recent use—post chapel, off-site use only

Bldg. 00811
Hunter Army Airfield
Chatham GA 31409
Landholding Agency: Army
Property Number: 21200740055
Status: Excess
Comments: 42853 sq. ft., most recent use—co hq bldg, off-site use only

Bldg. 00812
Hunter Army Airfield
Chatham GA 31409
Landholding Agency: Army
Property Number: 21200740056
Status: Excess
Comments: 1080 sq. ft., most recent use—power plant, off-site use only

Bldg. 00850
Hunter Army Airfield
Chatham GA 31409
Landholding Agency: Army
Property Number: 21200740057
Status: Excess
Comments: 108,287 sq. ft., presence of asbestos, most recent use—aircraft hangar, off-site use only

Bldg. 00860
Hunter Army Airfield
Chatham GA 31409
Landholding Agency: Army
Property Number: 21200740058
Status: Excess
Comments: 10679 sq. ft., presence of asbestos, most recent use—maint. hangar, off-site use only

Bldg. 00971
Fort Stewart
Hinesville GA 31314
Landholding Agency: Army
Property Number: 21200740062
Status: Excess
Comments: 4000 sq. ft., most recent use—vehicle maint., off-site use only

Bldg. 01209
Fort Stewart
Hinesville GA 31314
Landholding Agency: Army
Property Number: 21200740064
Status: Excess
Comments: 4786 sq. ft., presence of asbestos, most recent use—vehicle maint., off-site use only

Bldg. 3866
Fort Benning
Ft. Benning GA 31905
Landholding Agency: Army
Property Number: 21200740182
Status: Unutilized
Comments: 944 sq. ft., most recent use—office, off-site use only

Bldg. 8682
Fort Benning
Ft. Benning GA 31905
Landholding Agency: Army
Property Number: 21200740183
Status: Unutilized
Comments: 780 sq. ft., most recent use—admin., off-site use only

Bldg. 01021
Hunter Army Airfield
Savannah GA 31409
Landholding Agency: Army
Property Number: 21200840062
Status: Excess
Comments: 6855 sq. ft., most recent use—admin., presence of asbestos, off-site use only

4 Bldgs.
Hunter Army Airfield
Savannah GA 31409
Landholding Agency: Army
Property Number: 21201140011
Status: Excess
Directions: 1228, 125, 128, 1158
Comments: Off-site removal only; sq. ft. varies; current use: varies; fair to poor conditions— bldgs. need repairs; possible asbestos

5 Bldgs.
Hunter Army Airfield
Savannah GA 31409
Landholding Agency: Army
Property Number: 21201140012
Status: Excess
Directions: 1208, 1209, 1211, 1212, 1221
Comments: Off-site removal only; sq. ft. varies; current use: varies; fair conditions—bldgs. need repairs; possible asbestos

Bldg. 1201
685 Horace Emmet Wilson Blvd.
Savannah GA 31409
Landholding Agency: Army
Property Number: 21201140013
Status: Excess
Comments: Off-site removal only; 8,736 sq. ft.; current use: Administrative office; fair conditions—bldgs. need repairs; possible asbestos

Bldgs. 1154 and 1157
Hunter Army Airfield
Savannah GA 31409
Landholding Agency: Army
Property Number: 21201140014
Status: Excess
Comments: Off-site removal only; sq. ft. varies; current use: CO HQ Bldg; fair conditions— bldgs. need repair

Bldgs. 140 and 150
Hunter Army Airfield
Savannah GA 31409
Landholding Agency: Army
Property Number: 21201140015
Status: Excess
Comments: Off-site removal only; Bldg 140 = 4,863 sq. ft.; Bldg. 150 = 6,090 sq. ft.; poor conditions— bldgs. need repairs; current use: BDE HQ Bldg.

10 Buildings
Ft. Benning
Ft. Benning GA 31905
Landholding Agency: Army
Property Number: 21201230011
Status: Unutilized
Directions: 100, 2753, 2755, 2756, 2761, 2816, 3733, 3742, 3744, 3745
Comments: Off-site removal only; sq.ft. varies; use: varies; poor conditions; secured area w/limited access; contact Army for details re: accessibility or specific details related to a bldg.

Hawaii

P–88
Aliamanu Military Reservation
Honolulu HI 96818
Landholding Agency: Army
Property Number: 21199030324
Status: Unutilized
Directions: Approximately 600 feet from Main Gate on Aliamanu Drive.
Comments: 45,216 sq. ft. underground tunnel complex, pres. of asbestos clean-up required of contamination, use of respirator required by those entering property, use limitations

3377Z
Schofield Barracks
Wahiawa HI 96786
Landholding Agency: Army
Property Number: 21201210054
Status: Unutilized
Comments: Off-site removal only; 196 sf.; current use: transformer bldg.; poor conditions—needs repairs

Bldg. 00208
Dillingham Military
Waialua HI
Landholding Agency: Army
Property Number: 21201210078
Status: Unutilized
Comments: Off site removal only; 480 sq. ft.; recent use: hutmet

Bldg 0300B
308 Paalaa Uka Pupukea
Wahiawa HI 96786
Landholding Agency: Army
Property Number: 21201210083
Status: Unutilized
Comments: Off-site removal only; 114 sf.; current use: valve house for water tank; fair conditions

12 Bldgs.
Schofield Barracks
Wahiawa HI

Landholding Agency: Army
Property Number: 21201220009
Status: Unutilized
Directions: 2509, 2510, 2511, 2512, 2513, 2514, 2516, 2517, 3030, 3031, 3032, 3035
Comments: Off-site removal only; sf. varies; usage varies; storage; good conditions

A0300
308 Paalaa Uka Pupukea Rd.
Helemano
Wahiawa HI 96786
Landholding Agency: Army
Property Number: 21201230009
Status: Unutilized
Comments: Off-site removal only; 17.25 x 21 ft.; water storage

2 Buildings
Schofield Barracks
Wahiawa HI 96786
Landholding Agency: Army
Property Number: 21201230049
Status: Unutilized
Directions: M3010, QRAMP
Comments: Off-site removal only; sf. varies; repairs needed; secured area; contact Army re: accessibility requirements

2 Buildings
553/537 Airdrome Rd.
Wahiawa HI 96786
Landholding Agency: Army
Property Number: 21201230054
Status: Unutilized
Directions: 1001, 1005
Comments: Off-site removal only; sf. varies; use: shed & shelter; poor conditions; abandoned—need repairs

Bldg. 1536
Ft. Shafter
Honolulu HI 96819
Landholding Agency: Army
Property Number: 21201230060
Status: Unutilized
Comments: Off-site removal only; 2,117 sf.; vehicle storage; need repairs

Illinois

2 Buildings
3155 Blackhawk Dr.
Ft. Sheridan IL 60037
Landholding Agency: Army
Property Number: 21201230050
Status: Underutilized
Directions: 128, 573
Comments: Off-site removal only; sf. varies; use: varies; fair conditions; asbestos; secured area; contact Army re: accessibility requirements; transferee must obtain real estate doc. authorizing access/removal

Kansas

10 Bldgs.
9081 Vinton School Rd.
Fort Riley KS 66442
Landholding Agency: Army
Property Number: 21201110009
Status: Unutilized
Directions: 09081, 00179, 09004, 09016, 09074, 09008, 09383, 09384, 09386, 09451
Comments: Off-site removal only; multiple bldgs w/various sq. footage (80–660 sq. ft.) very poor condition, needs major repairs; current use varies

Ft. Riley U.S. Army Reservation
9377 6800 N RD
Fort Riley KS 66442
Landholding Agency: Army
Property Number: 21201110010
Status: Unutilized
Directions: 10 bldgs: 09377, 09302, 09082, 09083, 09084, 09385, 07033, 07034, 07036, 09015
Comments: Off-site removal only; multiple bldgs. w/various sq. footage (610–10,010 sq. ft., Current use varies) office to range operation support, very poor conditions—need major repairs

5 Bldgs
Fort Riley
Fort Riley KS 66442
Landholding Agency: Army
Property Number: 21201110016
Status: Unutilized
Directions: Bldgs: 09451, 08369, 07123, 1990, 07816
Comments: Off-site removal only, sq. footage varies w. each bldg; current use varies (gas chamber—storage), some bldgs. need repairs

5 Bldgs.
Fort Riley
Fort Riley KS 66442
Landholding Agency: Army
Property Number: 21201110017
Status: Unutilized
Directions: Bldgs: 01781, 07818, 08324, 07739, 8329
Comments: Off-site removal only, sq. ft. varies for each bldg., current use varies (oil storage bldg.—training ctr.), repairs needed for buildings.

5 Bldgs.
Fort Riley
Fort Riley KS 66442
Landholding Agency: Army
Property Number: 21201110018
Status: Unutilized
Directions: Bldgs: 01780, 09383, 08322, 08320, 08328
Comments: Off-site removal only, sq. ft. varies, current use varies (training ctr.—dispatch bldg.), poor conditions; need repairs for all

Bldg. 00542
542 Huebner Road
Fort Riley USAR
Fort Riley KS
Landholding Agency: Army
Property Number: 21201120066
Status: Unutilized
Comments: Off-site removal only, 14,528 sq ft.; wood; recent use: Army lodging

Bldg. 08327
8327 Wells St.
Fort Riley USAR
Fort Riley KS
Landholding Agency: Army
Property Number: 21201120067
Status: Unutilized
Comments: Off-site removal only, 9,600 sq. ft.; steel; recent use: training aid center

Bldg. 00600
600 Caisson Hill Rd.
Ft. Riley USAR
Fort Riley KS
Landholding Agency: Army
Property Number: 21201120070
Status: Unutilized
Comments: Off-site removal only, 380,376 sq. ft.; recent use: hospital; off site removal only

Bldg. 00541
541 Huebner Rd.
Fort Riley KS
Landholding Agency: Army
Property Number: 21201120075
Status: Unutilized
Comments: Off-site removal only, 18,083 sq. ft.; recent use: Army Lodging; wood; 45 yrs old; off site removal only

Bldg. 08321
8321 Wells St.
Fort Riley KS
Landholding Agency: Army
Property Number: 21201120076
Status: Unutilized
Comments: Off-site removal only, 5,060 sq. ft; concrete block; recent use: training aid center

Bldg. 00470
470 Huebner Rd.
Fort Riley KS
Landholding Agency: Army
Property Number: 21201120077
Status: Unutilized
Comments: Off-site Removal Only, 3,787 sq. ft.; concrete; recent use: lodging

Bldg. 8320
8320 Wells St.
Fort Riley KS
Landholding Agency: Army
Property Number: 21201120080
Status: Unutilized
Comments: Off-site Removal Only, 20,240 sq. ft.; concrete bldg.; recent use training aids center

Bldg. 00540
540 Huebner Road
Fort Riley KS
Landholding Agency: Army
Property Number: 21201120084
Status: Unutilized
Comments: Off-site Removal Only, 14,528 sq. ft.; wood structure; recent use; Army lodging; off site removal only

Bldg. 00471
471 Huebner Road
Fort Riley KS
Landholding Agency: Army
Property Number: 21201120086
Status: Unutilized
Comments: Off-site Removal Only, 3,547 sq. ft.; 39 yrs old, concrete; recent use; Army lodging; off site removal only

4 Bldgs.
null
Fort Riley KS 66442
Landholding Agency: Army
Property Number: 21201130040
Status: Unutilized
Directions: 00471, 00470, 00745, 00615
Comments: Off-site removal only; sq. ft. vary among properties; recent use: lodging, storage

Bldg. 00600
600 Caisson Hill Rd
Fort Riley KS 66442
Landholding Agency: Army
Property Number: 21201130042
Status: Unutilized
Comments: Off-site removal only; 380,376 sq. ft.; recent use: hospital

Bldgs. 00541 and 08321
Ft. Riley
Fort Riley KS
Landholding Agency: Army
Property Number: 21201130044

Status: Unutilized
Comments: Off-site removal only; sq. ft., vary among properties, recent use: lodging

2 Bldgs.
null
Fort Riley KS 66442
Landholding Agency: Army
Property Number: 21201130059
Status: Unutilized
Directions: 00540, 00541
Comments: Off-site removal only; sq. ft. vary among properties, recent use: lodging

Bldg. 00745
null
Fort Riley KS 66442
Landholding Agency: Army
Property Number: 21201130061
Status: Unutilized
Comments: Off-site removal only; 99 square feet; recent use: storage

Bldg. 00542
null
Fort Riley KS 66442
Landholding Agency: Army
Property Number: 21201130063
Status: Unutilized
Comments: Off-site removal only; 14,528 sq. ft.; recent use: lodging

2 Bldgs;
null
Fort Riley KS 66442
Landholding Agency: Army
Property Number: 21201130065
Status: Unutilized
Directions: 00470, 08327
Comments: Off-site removal only; sq. ft. vary among properties, recent use: lodging, and training center

Bldg. 431
Ft. Leavenworth
Ft. Leavenworth KS 66027
Landholding Agency: Army
Property Number: 21201220044
Status: Unutilized
Comments: Off-site removal only; 2,294 sf.; vacant; poor conditions; need repairs; asbestos & lead; remediation needed; secured area; contact Army re: removal procedures

34 Buildings
Ft. Riley
Ft. Riley KS 66442
Landholding Agency: Army
Property Number: 21201230036
Status: Unutilized
Directions: 712, 713, 822, 842, 843, 935, 936, 938, 7124, 7168, 7353, 7404, 7648, 7723, 7724, 7743, 7744, 7854, 7903, 7924, 7928, 7930, 7937, 7938, 7943, 7963, 8303, 8304, 8332, 8333, 8343, 8344, 8372, 8373
Comments: Off-site removal only; sf. varies; use: varies; bldgs. are deteriorating-need repairs; secured area; accessibility requirements apply; contact Army for further details

422
Rear of Bldg. 429
Ft. Leavenworth KS 66027
Landholding Agency: Army
Property Number: 21201230037
Status: Unutilized
Comments: Off-site removal only; 100 sf.; use: shed; need repairs; located in secured area; contact Army re: further details & accessibility requirements

4 Buildings
Ft. Riley
Ft. Riley KS 66442
Landholding Agency: Army
Property Number: 21201230051
Status: Unutilized
Directions: 8382, 8393, 8412, 8413
Comments: Off-site removal only; sq. ft. varies; use: storage; bldgs. deteriorating; secured area; need permission to access & remove

Kentucky

Fort Knox
Eisenhower Avenue
Fort Knox KY 40121
Landholding Agency: Army
Property Number: 21201110011
Status: Unutilized
Directions: Bldgs: 06559, 06571, 06575, 06583, 06584, 06585, 06586
Comments: Off-site removal only; multiple bldgs. w/various sq. footage (2,578–8,440 sq. ft.), current use varies (classroom—dental clinic), lead base paint, asbestos & mold identified

Fort Knox, 10 Bldgs.
Bacher Street
2nd Dragoons Rd & Abel St
Fort Knox KY 40121
Landholding Agency: Army
Property Number: 21201110012
Status: Unutilized
Directions: Bldgs: 06547, 06548, 06549, 06550, 06551, 06552, 06553, 06554, 06557, 06558
Comments: Off-site removal only, multiple bldgs. w/various sq. footage (8,527–41,631 sq. ft.) lead base paint, asbestos & mold identified in all bldgs. Current use varies

Fort Knox, 10 Bldgs.
Eisenhower Ave
Fort Knox KY 40121
Landholding Agency: Army
Property Number: 21201110015
Status: Unutilized
Directions: Bldgs: 06535, 06536, 06537, 06539, 06540, 06541, 06542, 06544, 06545, 06546
Comments: Off-site removal only, multiple bldgs. w/various sq. ft. (2,510–78,436 sq. ft.) lead base paint, asbestos & mold has been identified in all bldgs. Current use varies

11 Bldgs.
Ft. Knox
Ft. Knox KY 40121
Landholding Agency: Army
Property Number: 21201140002
Status: Unutilized
Directions: 02422, 02423, 02424, 02425, 02956, 02960, 00173, 02197, 02200, 00097, 00098
Comments: Off-site removal only; possible lead based paint, asbestos, and mold in all bldgs.; sq. ft. varies; current use: office

5 Bldgs.
Ft. Knox
Ft. Knox KY 40121
Landholding Agency: Army
Property Number: 21201140003
Status: Unutilized
Directions: 02317, 02323, 02324, 02349, 02421
Comments: Off-site removal only; possible lead base paint, asbestos, and mold; sq. ft. varies; current use: office

10 Bldgs.
Ft. Knox
Ft. Knox KY 40121
Landholding Agency: Army
Property Number: 21201140016
Status: Unutilized
Directions: 120, 161, 166, 171, 101, 114, 115, 116, 117, 1196
Comments: Off-site removal only; sq. ft. varies; current use: office space to storage; possible asbestos and mold

18 Bldgs.
Ft. Knox
Ft. Knox KY 40121
Landholding Agency: Army
Property Number: 21201140032
Status: Unutilized
Directions: 51, 52, 70, 73, 74, 76, 2961, 2963, 2964, 2969, 2970, 2971, 2972, 2973, 2974, 2975, 2979, 2316
Comments: Off-site removal only; possible asbestos, mold, and lead base paint; sq. ft. varies; current use: office

12 Bldgs.
Ft. Knox
Ft. Knox KY 40121
Landholding Agency: Army
Property Number: 21201140033
Status: Unutilized
Directions: 77, 78, 80, 81, 85, 86, 92, 94, 96, 9248, 2995, 2996
Comments: Off-site removal only; possible mold, asbestos, and lead base paint; sq. ft. varies; current use: office to storage

Bldg. 2980
Ft. Knox
Ft. Knox KY 40121
Landholding Agency: Army
Property Number: 21201140078
Status: Unutilized
Comments: Off-site removal only; 6,900 sq. ft.; current use: office; possible asbestos and mold

Bldg. 1197
Ft. Knox
Ft. Knox KY 40121
Landholding Agency: Army
Property Number: 21201140079
Status: Unutilized
Comments: Off-site removal only; 2,969 sq. ft.; current use: office; possible lead base paint, asbestos, and mold

23 Bldgs.
Ft. Knox
Ft. Knox KY 40121
Landholding Agency: Army
Property Number: 21201210034
Status: Unutilized
Directions: 6097, 6098, 6099, 6113, 6114, 6115, 6116, 6118, 6120, 6121, 6123, 6124, 6614, 6615, 6616, 7107, 9209, 9215, 9231, 9254, 9256, 9361, 9619
Comments: Off-site removal only; sq. ft. varies, current use: varies; poor conditions—need repairs; lead, mold, and asbestos identified

20 Bldgs.
Ft. Knox
Ft. Knox KY 40121
Landholding Agency: Army
Property Number: 21201210035
Status: Unutilized

Directions: 45, 46, 64, 75, 79, 107, 114, 155, 202, 205, 299, 1373, 1997, 2319, 2350, 3007, 6033, 6034, 6035, 6036
Comments: Off-site removal only; sq. ft. varies, current use: varies; poor conditions—need repairs; lead, mold, and asbestos identified

5 Bldgs.
Ft. Knox
Ft. Knox KY 40121
Landholding Agency: Army
Property Number: 21201210036
Status: Unutilized
Directions: 6038, 6039, 6040, 6093, 6094
Comments: Off-site removal only; sq. ft. varies, current use: varies; poor conditions—need repairs; lead, mold, and asbestos identified

22 Bldgs.
Ft. Knox
Ft. Knox KY 40121
Landholding Agency: Army
Property Number: 21201220020
Status: Unutilized
Directions: 79, 204, 1610, 1996, 2955, 2959, 2965, 2980, 2991, 6531, 6533, 6560, 6561, 6563, 6564, 6565, 6566, 6592, 6594, 9183, 9319, 9320
Comments: Off-site removal only; sf. varies; usage varies; need repairs; lead and asbestos identified; need remediation

5 Bldgs.
Blue Grass Army Depot
Richmond KY 40475
Landholding Agency: Army
Property Number: 21201220045
Status: Underutilized
Directions: 501, 558, 909, 1003, 1500
Comments: Off-site removal only; relocation may be difficult due to extremely poor conditions; sf. varies; current use storage; contact Army for further details

27 Bldgs.
Blue Grass Army Depot
Richmond KY 40475
Landholding Agency: Army
Property Number: 21201220046
Status: Underutilized
Directions: F0446–0469, G0470–0474, G0476–0479, H0483–0489, J0491–0493, J0495–0498
Comments: Off-site removal only; 168 sf. for each; safety shelter; relocation may be difficult due to poor conditions

E0450–0457 & E0459
Blue Grass Army Depot
Richmond KY 40475
Landholding Agency: Army
Property Number: 21201220047
Status: Underutilized
Comments: Off-site removal only; 168 sf. for each; safety shelter; relocation may be difficult due to poor conditions

D0440–D0449
Blue Grass Army Depot
Richmond KY 40475
Landholding Agency: Army
Property Number: 21201220048
Status: Underutilized
Comments: Off-site removal only; 168 sf. for each; safety shelter; relocation may be difficult due to poor conditions

C0431–C0438
Blue Grass Army Depot
Richmond KY 40475
Landholding Agency: Army
Property Number: 21201220049
Status: Underutilized
Comments: Off-site removal only; 168 sf. for each; safety shelter; relocation may be difficult due to poor conditions

B0420–B0429
Blue Grass Army Depot
Richmond KY 40475
Landholding Agency: Army
Property Number: 21201220050
Status: Underutilized
Comments: Off-site removal only; 168 sf. for each; safety shelter; relocation may be difficult due to poor conditions

A0410–0419
Blue Grass Army Depot
Richmond KY 40475
Landholding Agency: Army
Property Number: 21201220051
Status: Underutilized
Comments: Off-site removal only; 168 sf. each; safety shelter; relocation may be difficult due to conditions of properties

15 Buildings
Ft. Knox
Ft. Knox KY 40121
Landholding Agency: Army
Property Number: 21201230030
Status: Unutilized
Directions: 2991, 3006, 6127, 7345, 7346, 9254, 9264, 9294, 9302, 9311, 9315, 9335, 9427, 9503, 9504
Comments: Use: maintenance; extremely poor conditions; contamination identified; contact Army for further details & accessibility requirements

10 Buildings
Ft. Knox
Ft. Knox KY 40121
Landholding Agency: Army
Property Number: 21201230031
Status: Unutilized
Directions: 9505, 9506, 9507, 9508, 9509, 9617, 9675, 9681, 9706, 9707
Comments: sf. varies; extremely poor conditions; contamination identified; contact Army for further details & accessibility requirements

Louisiana

Bldg. 8423, Fort Polk
null
Ft. Polk LA 71459
Landholding Agency: Army
Property Number: 21199640528
Status: Underutilized
Directions:
Comments: 4172 sq. ft., most recent use—barracks

B–8248
Ft. Polk
Ft. Polk LA 71459
Landholding Agency: Army
Property Number: 21201210069
Status: Underutilized
Comments: 3,141 sf.; current use: Admin. Bldg.; poor conditions—need repairs

B–8401
Ft. Polk
Ft. Polk LA 71459
Landholding Agency: Army
Property Number: 21201210070
Status: Underutilized
Comments: 3,141 sf.; current use: Admin. Bldg.; poor conditions—need repairs

21 Buildings
Polk
Ft. Polk LA 71459
Landholding Agency: Army
Property Number: 21201230034
Status: Underutilized
Directions: 9515, 9537, 9554, 9570, 9593, 9594, 9601, 9602, 9603, 9604, 9607, 9609, 9618, 9619, 9666, 9703, 9741, 9744, 9751, 9753, 9755
Comments: Off-site removal only; sf. varies; use: varies; poor conditions; contact Army for further details re: a specific property

18 Buildings
Polk
Ft. Polk LA 71459
Landholding Agency: Army
Property Number: 21201230035
Status: Underutilized
Directions: 9764, 9765, 9773, 9793, 9794, 9797, 9803, 9812, 9818, 9830, 9836, 9837, 9840, 9854, 9913, 9914, 9917, 9920
Comments: Off-site removal only; sq. ft. varies; use: varies; poor conditions; contact Army for further details re: a specific property

Maryland

Bldg. 0459B
Aberdeen Proving Ground
Aberdeen MD 21005–5001
Landholding Agency: Army
Property Number: 21200120106
Status: Unutilized
GSA Number:
Comments: 225 sq. ft., poor condition, most recent use—equipment bldg., off-site use only

Bldg. 00785
Aberdeen Proving Ground
Aberdeen MD 21005–5001
Landholding Agency: Army
Property Number: 21200120107
Status: Unutilized
GSA Number:
Comments: 160 sq. ft., poor condition, most recent use—shelter, off-site use only

Bldg. E5239
Aberdeen Proving Ground
Aberdeen MD 21005–5001
Landholding Agency: Army
Property Number: 21200120113
Status: Unutilized
GSA Number:
Comments: 230 sq. ft., most recent use—storage, off-site use only

Bldg. E5317
Aberdeen Proving Ground
Aberdeen MD 21005–5001
Landholding Agency: Army
Property Number: 21200120114
Status: Unutilized
GSA Number:
Comments: 3158 sq. ft., presence of asbestos/lead paint, most recent use—lab, off-site use only

Bldg. E5637
Aberdeen Proving Ground
Aberdeen MD 21005–5001
Landholding Agency: Army
Property Number: 21200120115
Status: Unutilized
GSA Number:
Comments: 312 sq. ft., presence of asbestos/lead paint, most recent use—lab, off-site use only

Bldg. 219
Ft. George G. Meade
Ft. Meade MD 20755
Landholding Agency: Army
Property Number: 21200140078
Status: Unutilized
GSA Number:
Comments: 8142 sq. ft., presence of asbestos/lead paint, most recent use—admin., off-site use only

Bldg. 294
Ft. George G. Meade
Ft. Meade MD 20755
Landholding Agency: Army
Property Number: 21200140081
Status: Unutilized
GSA Number:
Comments: 3148 sq. ft., presence of asbestos/lead paint, most recent use—entomology facility, off-site use only

Bldg. 1007
Ft. George G. Meade
Ft. Meade MD 20755
Landholding Agency: Army
Property Number: 21200140085
Status: Unutilized
GSA Number:
Comments: 3108 sq. ft., presence of asbestos/lead paint, most recent use—storage, off-site use only

Bldg. 2214
Fort George G. Meade
Fort Meade MD 20755
Landholding Agency: Army
Property Number: 21200230054
Status: Unutilized
GSA Number:
Comments: 7740 sq. ft., needs rehab, possible asbestos/lead paint, most recent use—storage, off-site use only

Bldg. 00375
Aberdeen Proving Grounds
Aberdeen MD 21005
Landholding Agency: Army
Property Number: 21200320107
Status: Unutilized
GSA Number:
Comments: 64 sq. ft., most recent use—storage, off-site use only

Bldg. 0385A
Aberdeen Proving Grounds
Aberdeen MD 21005
Landholding Agency: Army
Property Number: 21200320110
Status: Unutilized
GSA Number:
Comments: 944 sq. ft., off-site use only

Bldg. 00523
Aberdeen Proving Grounds
Aberdeen MD 21005
Landholding Agency: Army
Property Number: 21200320113
Status: Unutilized
GSA Number:
Comments: 3897 sq. ft., most recent use—paint shop, off-site use only

Bldg. 0700B
Aberdeen Proving Grounds
Aberdeen MD 21005
Landholding Agency: Army
Property Number: 21200320121
Status: Unutilized
GSA Number:
Comments: 505 sq. ft., off-site use only

Bldg. 01113
Aberdeen Proving Grounds
Aberdeen MD 21005
Landholding Agency: Army
Property Number: 21200320128
Status: Unutilized
GSA Number:
Comments: 1012 sq. ft., off-site use only

Bldgs. 01124, 01132
Aberdeen Proving Grounds
Aberdeen MD 21005
Landholding Agency: Army
Property Number: 21200320129
Status: Unutilized
GSA Number:
Comments: 740/2448 sq. ft., most recent use—lab, off-site use only

Bldg. 03558
Aberdeen Proving Grounds
Aberdeen MD 21005
Landholding Agency: Army
Property Number: 21200320133
Status: Unutilized
GSA Number:
Comments: 18,000 sq. ft., most recent use—storage, off-site use only

Bldg. 05262
Aberdeen Proving Grounds
Aberdeen MD 21005
Landholding Agency: Army
Property Number: 21200320136
Status: Unutilized
GSA Number:
Comments: 864 sq. ft., most recent use—storage, off-site use only

Bldg. 05608
Aberdeen Proving Grounds
Aberdeen MD 21005
Landholding Agency: Army
Property Number: 21200320137
Status: Unutilized
GSA Number:
Comments: 1100 sq. ft., most recent use—maint bldg., off-site use only

Bldg. E5645
Aberdeen Proving Grounds
Aberdeen MD 21005
Landholding Agency: Army
Property Number: 21200320150
Status: Unutilized
GSA Number:
Comments: 548 sq. ft., most recent use—storage, off-site use only

Bldg. 00435
Aberdeen Proving Grounds
Aberdeen MD 21005
Landholding Agency: Army
Property Number: 21200330111
Status: Unutilized
GSA Number:
Comments: 1191 sq. ft., needs rehab, most recent use—storage, off-site use only

Bldg. 0449A
Aberdeen Proving Grounds
Aberdeen MD 21005
Landholding Agency: Army
Property Number: 21200330112
Status: Unutilized
GSA Number:
Comments: 143 sq. ft., needs rehab, most recent use—substation switch bldg., off-site use only

Bldg. 0460
Aberdeen Proving Grounds
Aberdeen MD 21005
Landholding Agency: Army
Property Number: 21200330114
Status: Unutilized
GSA Number:
Comments: 1800 sq. ft., needs rehab, most recent use—electrical EQ bldg., off-site use only

Bldg. 00914
Aberdeen Proving Grounds
Aberdeen MD 21005
Landholding Agency: Army
Property Number: 21200330118
Status: Unutilized
GSA Number:
Comments: Needs rehab, most recent use—safety shelter, off-site use only

Bldg. 00915
Aberdeen Proving Grounds
Aberdeen MD 21005
Landholding Agency: Army
Property Number: 21200330119
Status: Unutilized
GSA Number:
Comments: 247 sq. ft., needs rehab, most recent use—storage, off-site use only

Bldg. 01189
Aberdeen Proving Grounds
Aberdeen MD 21005
Landholding Agency: Army
Property Number: 21200330126
Status: Unutilized
GSA Number:
Comments: 800 sq. ft., needs rehab, most recent use—range bldg., off-site use only

Bldg. E1413
Aberdeen Proving Grounds
Aberdeen MD 21005
Landholding Agency: Army
Property Number: 21200330127
Status: Unutilized
GSA Number:
Comments: Needs rehab, most recent use—observation tower, off-site use only

Bldg. E3175
Aberdeen Proving Grounds
Aberdeen MD 21005
Landholding Agency: Army
Property Number: 21200330134
Status: Unutilized
GSA Number:
Comments: 1296 sq. ft., needs rehab, most recent use—hazard bldg., off-site use only

4 Bldgs.
Aberdeen Proving Grounds
Aberdeen MD 21005
Landholding Agency: Army
Property Number: 21200330135
Status: Unutilized
GSA Number:
Directions: E3224, E3228, E3230, E3232, E3234
Comments: Sq. ft. varies, needs rehab, most recent use—lab test bldgs., off-site use only

Bldg. E3241
Aberdeen Proving Grounds
Aberdeen MD 21005
Landholding Agency: Army
Property Number: 21200330136
Status: Unutilized
GSA Number:
Comments: 592 sq. ft., needs rehab, most recent use—medical res bldg., off-site use only

Bldg. E3300

Aberdeen Proving Grounds
Aberdeen MD 21005
Landholding Agency: Army
Property Number: 21200330139
Status: Unutilized
GSA Number:
Comments: 44,352 sq. ft., needs rehab, most recent use—chemistry lab, off-site use only

Bldg. E3335
Aberdeen Proving Grounds
Aberdeen MD 21005
Landholding Agency: Army
Property Number: 21200330144
Status: Unutilized
GSA Number:
Comments: 400 sq. ft., needs rehab, most recent use—storage, off-site use only

Bldgs. E3360, E3362, E3464
Aberdeen Proving Grounds
Aberdeen MD 21005
Landholding Agency: Army
Property Number: 21200330145
Status: Unutilized
GSA Number:
Comments: 3588/236 sq. ft., needs rehab, most recent use—storage, off-site use only

Bldg. E3542
Aberdeen Proving Grounds
Aberdeen MD 21005
Landholding Agency: Army
Property Number: 21200330148
Status: Unutilized
GSA Number:
Comments: 1146 sq. ft., needs rehab, most recent use—lab test bldg., off-site use only

Bldg. E4420
Aberdeen Proving Grounds
Aberdeen MD 21005
Landholding Agency: Army
Property Number: 21200330151
Status: Unutilized
GSA Number:
Comments: 14,997 sq. ft., needs rehab, most recent use—police bldg., off-site use only

4 Bldgs.
Aberdeen Proving Grounds
Aberdeen MD 21005
Landholding Agency: Army
Property Number: 21200330154
Status: Unutilized
GSA Number:
Directions: E5005, E5049, E5050, E5051
Comments: sq. ft. varies, needs rehab, most recent use—storage, off-site use only

Bldg. E5068
Aberdeen Proving Grounds
Aberdeen MD 21005
Landholding Agency: Army
Property Number: 21200330155
Status: Unutilized
GSA Number:
Comments: 1200 sq. ft., needs rehab, most recent use—fire station, off-site use only

Bldgs. 05448, 05449
Aberdeen Proving Grounds
Aberdeen MD 21005
Landholding Agency: Army
Property Number: 21200330161
Status: Unutilized
GSA Number:
Comments: 6431 sq. ft., needs rehab, most recent use—enlisted UHP, off-site use only

Bldg. 05450
Aberdeen Proving Grounds
Aberdeen MD 21005
Landholding Agency: Army
Property Number: 21200330162
Status: Unutilized
GSA Number:
Comments: 2730 sq. ft., needs rehab, most recent use—admin., off-site use only

Bldgs. 05451, 05455
Aberdeen Proving Grounds
Aberdeen MD 21005
Landholding Agency: Army
Property Number: 21200330163
Status: Unutilized
GSA Number:
Comments: 2730/6431 sq. ft., needs rehab, most recent use—storage, off-site use only

Bldg. 05453
Aberdeen Proving Grounds
Aberdeen MD 21005
Landholding Agency: Army
Property Number: 21200330164
Status: Unutilized
GSA Number:
Comments: 6431 sq. ft., needs rehab, most recent use—admin., off-site use only

Bldg. E5609
Aberdeen Proving Grounds
Aberdeen MD 21005
Landholding Agency: Army
Property Number: 21200330167
Status: Unutilized
GSA Number:
Comments: 2053 sq. ft., needs rehab, most recent use—storage, off-site use only

Bldg. E5611
Aberdeen Proving Grounds
Aberdeen MD 21005
Landholding Agency: Army
Property Number: 21200330168
Status: Unutilized
GSA Number:
Comments: 11,242 sq. ft., needs rehab, most recent use—hazard bldg., off-site use only

Bldg. E5634
Aberdeen Proving Grounds
Aberdeen MD 21005
Landholding Agency: Army
Property Number: 21200330169
Status: Unutilized
GSA Number:
Comments: 200 sq. ft., needs rehab, most recent use—flammable storage, off-site use only

Bldg. E5654
Aberdeen Proving Grounds
Aberdeen MD 21005
Landholding Agency: Army
Property Number: 21200330171
Status: Unutilized
GSA Number:
Comments: 21,532 sq. ft., needs rehab, most recent use—storage, off-site use only

Bldg. E5942
Aberdeen Proving Grounds
Aberdeen MD 21005
Landholding Agency: Army
Property Number: 21200330176
Status: Unutilized
GSA Number:
Comments: 2147 sq. ft., needs rehab, most recent use—igloo storage, off-site use only

Bldgs. E5952, E5953
Aberdeen Proving Grounds
Aberdeen MD 21005
Landholding Agency: Army
Property Number: 21200330177
Status: Unutilized
GSA Number:
Comments: 100/24 sq. ft., needs rehab, most recent use—compressed air bldg., off-site use only

Bldgs. E7401, E7402
Aberdeen Proving Grounds
Aberdeen MD 21005
Landholding Agency: Army
Property Number: 21200330178
Status: Unutilized
GSA Number:
Comments: 256/440 sq. ft., needs rehab, most recent use—storage, off-site use only

Bldg. E7407, E7408
Aberdeen Proving Grounds
Aberdeen MD 21005
Landholding Agency: Army
Property Number: 21200330179
Status: Unutilized
GSA Number:
Comments: 1078/762 sq. ft., needs rehab, most recent use—deacon facility, off-site use only

Bldg. 3070A
Aberdeen Proving Ground
Harford MD 21005
Landholding Agency: Army
Property Number: 21200420055
Status: Unutilized
Comments: 2299 sq. ft., most recent use—heat plant, off-site use only

Bldg. E5026
Aberdeen Proving Ground
Harford MD 21005
Landholding Agency: Army
Property Number: 21200420056
Status: Unutilized
Comments: 20,536 sq. ft., most recent use—storage, off-site use only

Bldg. 05261
Aberdeen Proving Ground
Harford MD 21005
Landholding Agency: Army
Property Number: 21200420057
Status: Unutilized
Comments: 10067 sq. ft., most recent use—maintenance, off-site use only

Bldg. E5876
Aberdeen Proving Grounds
Aberdeen MD 21005
Landholding Agency: Army
Property Number: 21200440073
Status: Unutilized
Comments: 1192 sq. ft., needs rehab, most recent use—storage, off-site use only

Bldg. 00688
Aberdeen Proving Ground
Aberdeen MD 21005
Landholding Agency: Army
Property Number: 21200530080
Status: Unutilized
Comments: 24,192 sq. ft., most recent use—ammo, off-site use only

Bldg. 04925
Aberdeen Proving Ground
Aberdeen MD 21005
Landholding Agency: Army
Property Number: 21200540091
Status: Unutilized
Comments: 1326 sq. ft., off-site use only

Bldg. 00255

Aberdeen Proving Ground
Harford MD 21005
Landholding Agency: Army
Property Number: 21200720052
Status: Unutilized
Comments: 64 sq. ft., most recent use—storage, off-site use only

Bldg. 00638
Aberdeen Proving Ground
Harford MD 21005
Landholding Agency: Army
Property Number: 21200720053
Status: Unutilized
Comments: 4295 sq. ft., most recent use—storage, off-site use only

Bldg. 00721
Aberdeen Proving Ground
Harford MD
Landholding Agency: Army
Property Number: 21200720054
Status: Unutilized
Comments: 135 sq. ft., most recent use—storage, off-site use only

Bldgs. 00936, 00937
Aberdeen Proving Ground
Harford MD 21005
Landholding Agency: Army
Property Number: 21200720055
Status: Unutilized
Comments: 2000 sq. ft., most recent use—storage, off-site use only

Bldgs. E1410, E1434
Aberdeen Proving Ground
Harford MD 21005
Landholding Agency: Army
Property Number: 21200720056
Status: Unutilized
Comments: 2276/3106 sq. ft., most recent use—laboratory, off-site use only

Bldg. 03240
Aberdeen Proving Ground
Harford MD 21005
Landholding Agency: Army
Property Number: 21200720057
Status: Unutilized
Comments: 10,049 sq. ft., most recent use—office, off-site use only

Bldg. E3834
Aberdeen Proving Ground
Harford MD 21005
Landholding Agency: Army
Property Number: 21200720058
Status: Unutilized
Comments: 72 sq. ft., most recent use—office, off-site use only

Bldgs. E4465, E4470, E4480
Aberdeen Proving Ground
Harford MD 21005
Landholding Agency: Army
Property Number: 21200720059
Status: Unutilized
Comments: 17658/16876/17655 sq. ft., most recent use—office, off-site use only

Bldgs. E5137, 05219
Aberdeen Proving Ground
Harford MD 21005
Landholding Agency: Army
Property Number: 21200720060
Status: Unutilized
Comments: 3700/8175 sq. ft., most recent use—office, off-site use only

Bldg. E5236
Aberdeen Proving Ground
Harford MD 21005
Landholding Agency: Army
Property Number: 21200720061
Status: Unutilized
Comments: 10,325 sq. ft., most recent use—storage, off-site use only

Bldg. E5282
Aberdeen Proving Ground
Harford MD 21005
Landholding Agency: Army
Property Number: 21200720062
Status: Unutilized
Comments: 4820 sq. ft., most recent use—hazard bldg., off-site use only

Bldgs. E5736, E5846, E5926
Aberdeen Proving Ground
Harford MD 21005
Landholding Agency: Army
Property Number: 21200720063
Status: Unutilized
Comments: 1069/4171/11279 sq. ft., most recent use—storage, off-site use only

Bldg. E6890
Aberdeen Proving Ground
Harford MD 21005
Landholding Agency: Army
Property Number: 21200720064
Status: Unutilized
Comments: 1 sq. ft., most recent use—affected area, off-site use only

Bldg. 00310
Aberdeen Proving Ground
Harford MD 21005
Landholding Agency: Army
Property Number: 21200820077
Status: Unutilized
Comments: 56516 sq. ft., most recent use—admin., off-site use only

Bldg. 00315
Aberdeen Proving Ground
Harford MD
Landholding Agency: Army
Property Number: 21200820078
Status: Unutilized
Comments: 74396 sq. ft., most recent use—mach shop, off-site use only

Bldg. 00338
Aberdeen Proving Ground
Harford MD
Landholding Agency: Army
Property Number: 21200820079
Status: Unutilized
Comments: 45443 sq. ft., most recent use—gnd tran eqp, off-site use only

Bldg. 00360
Aberdeen Proving Ground
Harford MD
Landholding Agency: Army
Property Number: 21200820080
Status: Unutilized
Comments: 15287 sq. ft., most recent use—general inst., off-site use only

Bldg. 00445
Aberdeen Proving Ground
Harford MD
Landholding Agency: Army
Property Number: 21200820081
Status: Unutilized
Comments: 6367 sq. ft., most recent use—lab, off-site use only

Bldg. 00851
Aberdeen Proving Ground
Harford MD
Landholding Agency: Army
Property Number: 21200820082
Status: Unutilized
Comments: 694 sq. ft., most recent use—range bldg., off-site use only

E1043
Aberdeen Proving Ground
Harford MD
Landholding Agency: Army
Property Number: 21200820083
Status: Unutilized
Comments: 5200 sq. ft., most recent use—lab, off-site use only

Bldg. 01089
Aberdeen Proving Ground
Harford MD
Landholding Agency: Army
Property Number: 21200820084
Status: Unutilized
Comments: 12369 sq. ft., most recent use—veh maint, off-site use only

Bldg. 01091
Aberdeen Proving Ground
Harford MD
Landholding Agency: Army
Property Number: 21200820085
Status: Unutilized
Comments: 2201 sq. ft., most recent use—storage, off-site use only

Bldg. E1386
Aberdeen Proving Ground
Harford MD
Landholding Agency: Army
Property Number: 21200820086
Status: Unutilized
Comments: 251 sq. ft., most recent use—eng/mnt, off-site use only

5 Bldgs.
Aberdeen Proving Ground
Harford MD
Landholding Agency: Army
Property Number: 21200820087
Status: Unutilized
Directions:
E1440, E1441, E1443, E1445, E1455
Comments: 112 sq. ft., most recent use—safety shelter, off-site use only

Bldgs. E1467, E1485
Aberdeen Proving Ground
Harford MD
Landholding Agency: Army
Property Number: 21200820088
Status: Unutilized
Comments: 160/800 sq. ft., most recent use—storage, off-site use only

Bldg. E1521
Aberdeen Proving Ground
Harford MD
Landholding Agency: Army
Property Number: 21200820090
Status: Unutilized
Comments: 1200 sq. ft., most recent use—overhead protection, off-site use only

Bldg. E1570
Aberdeen Proving Ground
Harford MD
Landholding Agency: Army
Property Number: 21200820091
Status: Unutilized
Comments: 47027 sq. ft., most recent use—office, off-site use only

Bldg. E1572
Aberdeen Proving Ground
Harford MD
Landholding Agency: Army
Property Number: 21200820092

Status: Unutilized
Comments: 1402 sq. ft., most recent use—maint., off-site use only

4 Bldgs.
Aberdeen Proving Ground
Harford MD
Landholding Agency: Army
Property Number: 21200820093
Status: Unutilized
Directions:
E1645, E1675, E1677, E1930
Comments: various sq. ft., most recent use—office, off-site use only

Bldgs. E2160, E2184, E2196
Aberdeen Proving Ground
Harford MD
Landholding Agency: Army
Property Number: 21200820094
Status: Unutilized
Comments: 12440/13816 sq. ft., most recent use—storage, off-site use only

Bldg. E2174
Aberdeen Proving Ground
Harford MD
Landholding Agency: Army
Property Number: 21200820095
Status: Unutilized
Comments: 132 sq. ft., off-site use only

Bldgs. 02208, 02209
Aberdeen Proving Ground
Harford MD
Landholding Agency: Army
Property Number: 21200820096
Status: Unutilized
Comments: 11566/18085 sq. ft., most recent use—lodging, off-site use only

Bldg. 02353
Aberdeen Proving Ground
Harford MD
Landholding Agency: Army
Property Number: 21200820097
Status: Unutilized
Comments: 19252 sq. ft., most recent use—veh maint, off-site use only

Bldgs. 02482, 02484
Aberdeen Proving Ground
Harford MD
Landholding Agency: Army
Property Number: 21200820098
Status: Unutilized
Comments: 8359 sq. ft., most recent use—gen purp, off-site use only

Bldg. 02483
Aberdeen Proving Ground
Harford MD
Landholding Agency: Army
Property Number: 21200820099
Status: Unutilized
Comments: 1360 sq. ft., most recent use—heat plt, off-site use only

Bldgs. 02504, 02505
Aberdeen Proving Ground
Harford MD
Landholding Agency: Army
Property Number: 21200820100
Status: Unutilized
Comments: 11720/17434 sq. ft., most recent use—lodging, off-site use only

Bldgs. 02831, E3488
Aberdeen Proving Ground
Harford MD
Landholding Agency: Army
Property Number: 21200820101
Status: Unutilized
Comments: 576/64 sq. ft., most recent use—access cnt fac, off-site use only

Bldg. 2831A
Aberdeen Proving Ground
Harford MD
Landholding Agency: Army
Property Number: 21200820102
Status: Unutilized
Comments: 1200 sq. ft., most recent use—overhead protection, off-site use only

Bldg. 03320
Aberdeen Proving Ground
Harford MD
Landholding Agency: Army
Property Number: 21200820103
Status: Unutilized
Comments: 10600 sq. ft., most recent use—admin, off-site use only

Bldg. E3466
Aberdeen Proving Ground
Aberdeen MD
Landholding Agency: Army
Property Number: 21200820104
Status: Unutilized
Comments: 236 sq. ft., most recent use—protective barrier, off-site use only

4 Bldgs.
Aberdeen Proving Ground
Harford MD
Landholding Agency: Army
Property Number: 21200820105
Status: Unutilized
Directions:
E3510, E3570, E3640, E3832
Comments: Various sq. ft., most recent use—lab, off-site use only

Bldg. E3544
Aberdeen Proving Ground
Harford MD
Landholding Agency: Army
Property Number: 21200820106
Status: Unutilized
Comments: 5400 sq. ft., most recent use—ind waste, off-site use only

Bldgs. E3561, 03751
Aberdeen Proving Ground
Harford MD
Landholding Agency: Army
Property Number: 21200820107
Status: Unutilized
Comments: 64/189 sq. ft., most recent use—access cnt fac, off-site use only

Bldg. 03754
Aberdeen Proving Ground
Harford MD
Landholding Agency: Army
Property Number: 21200820108
Status: Unutilized
Comments: 324 sq. ft., most recent use—classroom, off-site use only

Bldg. 3823A
Aberdeen Proving Ground
Harford MD
Landholding Agency: Army
Property Number: 21200820109
Status: Unutilized
Comments: 113 sq. ft., most recent use—shed, off-site use only

Bldg. E3948
Aberdeen Proving Ground
Harford MD
Landholding Agency: Army
Property Number: 21200820110
Status: Unutilized
Comments: 3420 sq. ft., most recent use—emp chg fac, off-site use only

4 Bldgs.
Aberdeen Proving Ground
Harford MD
Landholding Agency: Army
Property Number: 21200820111
Status: Unutilized
Directions:
E5057, E5058, E5246, 05258
Comments: Various sq. ft., most recent use—storage, off-site use only

Bldgs. E5106, 05256
Aberdeen Proving Ground
Harford MD
Landholding Agency: Army
Property Number: 21200820112
Status: Unutilized
Comments: 18621/8720 sq. ft., most recent use—office, off-site use only

Bldg. E5126
Aberdeen Proving Ground
Harford MD
Landholding Agency: Army
Property Number: 21200820113
Status: Unutilized
Comments: 17664 sq. ft., most recent use—heat plt, off-site use only

Bldg. E5128
Aberdeen Proving Ground
Harford MD
Landholding Agency: Army
Property Number: 21200820114
Status: Unutilized
Comments: 3750 sq. ft., most recent use—substation, off-site use only

Bldg. E5188
Aberdeen Proving Ground
Harford MD
Landholding Agency: Army
Property Number: 21200820115
Status: Unutilized
Comments: 22790 sq. ft., most recent use—lab, off-site use only

Bldg. E5179
Aberdeen Proving Ground
Harford MD
Landholding Agency: Army
Property Number: 21200820116
Status: Unutilized
Comments: 47335 sq. ft., most recent use—info sys, off-site use only

Bldg. E5190
Aberdeen Proving Ground
Harford MD
Landholding Agency: Army
Property Number: 21200820117
Status: Unutilized
Comments: 874 sq. ft., most recent use—storage, off-site use only

Bldg. 05223
Aberdeen Proving Ground
Harford MD
Landholding Agency: Army
Property Number: 21200820118
Status: Unutilized
Comments: 6854 sq. ft., most recent use—gen rep inst, off-site use only

Bldgs. 05259, 05260
Aberdeen Proving Ground
Harford MD
Landholding Agency: Army
Property Number: 21200820119
Status: Unutilized

Comments: 10067 sq. ft., most recent use—maint, off-site use only

Bldgs. 05263, 05264
Aberdeen Proving Ground
Harford MD
Landholding Agency: Army
Property Number: 21200820120
Status: Unutilized
Comments: 200 sq. ft., most recent use—org space, off-site use only

5 Bldgs.
Aberdeen Proving Ground
Harford MD
Landholding Agency: Army
Property Number: 21200820121
Status: Unutilized
Directions: 05267, E5294, E5327, E5441, E5485
Comments: Various sq. ft., most recent use—storage, off-site use only

Bldg. E5292
Aberdeen Proving Ground
Harford MD
Landholding Agency: Army
Property Number: 21200820122
Status: Unutilized
Comments: 1166 sq. ft., most recent use—comp rep inst, off-site use only

Bldg. E5380
Aberdeen Proving Ground
Harford MD
Landholding Agency: Army
Property Number: 21200820123
Status: Unutilized
Comments: 9176 sq. ft., most recent use—lab, off-site use only

Bldg. E5452
Aberdeen Proving Ground
Harford MD
Landholding Agency: Army
Property Number: 21200820124
Status: Unutilized
Comments: 9623 sq. ft., off-site use only

Bldg. 05654
Aberdeen Proving Ground
Harford MD
Landholding Agency: Army
Property Number: 21200820125
Status: Unutilized
Comments: 38 sq. ft. most recent use—shed, off-site use only

Bldg. 05656
Aberdeen Proving Ground
Harford MD
Landholding Agency: Army
Property Number: 21200820126
Status: Unutilized
Comments: 2240 sq. ft., most recent use—overhead protection off-site use only 5 Bldgs.

Aberdeen Proving Ground
Harford MD
Landholding Agency: Army
Property Number: 21200820127
Status: Unutilized
Directions:
E5730, E5738, E5915, E5928, E6875
Comments: Various sq. ft., most recent use—storage, off-site use only

Bldg. E5840
Aberdeen Proving Ground
Harford MD
Landholding Agency: Army
Property Number: 21200820129
Status: Unutilized
Comments: 14200 sq. ft., most recent use—lab, off-site use only

Bldg. E5946
Aberdeen Proving Ground
Harford MD
Landholding Agency: Army
Property Number: 21200820130
Status: Unutilized
Comments: 2147 sq. ft., most recent use—igloo str, off-site use only

Bldg. E6872
Aberdeen Proving Ground
Harford MD
Landholding Agency: Army
Property Number: 21200820131
Status: Unutilized
Comments: 1380 sq. ft., most recent use—dispatch, off-site use only

Bldgs. E7331, E7332, E7333
Aberdeen Proving Ground
Harford MD
Landholding Agency: Army
Property Number: 21200820132
Status: Unutilized
Comments: Most recent use—protective barrier, off-site use only

Bldg. E7821
Aberdeen Proving Ground
Harford MD
Landholding Agency: Army
Property Number: 21200820133
Status: Unutilized
Comments: 3500 sq. ft., most recent use—xmitter bldg, off-site use only

Bldg. 02483
Aberdeen Proving Ground
Harford MD 21005
Landholding Agency: Army
Property Number: 21200920025
Status: Unutilized
Comments: 1360 sq. ft., most recent use—heat plt bldg., off-site use only

Bldg. 03320
Aberdeen Proving Ground
Harford MD 21005
Landholding Agency: Army
Property Number: 21200920026
Status: Unutilized
Comments: 10,600 sq. ft., most recent use—admin., off-site use only

Bldg. 06186
Ft. Detrick
Frederick MD 21702
Landholding Agency: Army
Property Number: 21201110026
Status: Unutilized
Comments: Off-site removal only, 14,033 sq. ft., current use: communications ctr., bldg. not energy efficient but fair condition

Bldg. 01692
Ft. Detrick
Frederick MD 21702
Landholding Agency: Army
Property Number: 21201110028
Status: Unutilized
Comments: Off-site removal only, 1,000 sq. ft., current use; communications ctr., bldg. is not energy efficient but in fair condition

10 Bldgs.
Aberdeen Proving Ground
Aberdeen MD 21005
Landholding Agency: Army
Property Number: 21201210016
Status: Unutilized
Directions: E3266, E3268, E3269, E3299, E3300, E3305, E3306, E3326, E3344, E3500
Comments: Off-site removal only; sq. ft. varies; current use: varies; lead and asbestos identified; moderate conditions

10 Bldgs.
Aberdeen Proving Ground
Aberdeen MD 21005
Landholding Agency: Army
Property Number: 21201210017
Status: Unutilized
Directions: E3507, E3514, E3516, E3520, E3522, E3524, E3525, E3549, E3550, E3552
Comments: Off-site removal only; sq. ft. varies; current use: varies; lead and asbestos identified; moderate conditions

10 Bldgs.
Aberdeen Proving Ground
Aberdeen MD 21005
Landholding Agency: Army
Property Number: 21201210018
Status: Unutilized
Directions: E3570, E3573, E3607, E3615, E3623, E3646, E4405, E4410, E4415, E4420
Comments: Off-site removal only; sq. ft. varies; current use: varies; lead and asbestos identified; moderate conditions

11 Bldgs.
Aberdeen Proving Ground
Aberdeen MD 21005
Landholding Agency: Army
Property Number: 21201210019
Status: Unutilized
Directions: E4430, E4435, E4440, E4445, E4460, E4465, E4470, E4475, E4480, E5027
Comments: Off-site removal only; sq. ft. varies; current use: varies; lead and asbestos identified; moderate conditions

10 Bldgs.
Aberdeen Proving Ground
Aberdeen MD 21005
Landholding Agency: Army
Property Number: 21201210020
Status: Unutilized
Directions: E5106, E5135, E5141, E5158, E5164, E5165, E5188, E5342, E5354, E5356
Comments: Off-site removal only; sq. ft. varies; current use: varies; lead and asbestos identified; moderate conditions

9 Bldgs.
Aberdeen Proving Ground
Aberdeen MD 21005
Landholding Agency: Army
Property Number: 21201210021
Status: Unutilized
Directions: E5365, E5425, E5427, E5429, E5643, E5684, E5686, E5687, E5725
Comments: Off-site removal only; sq. ft. varies; current use: varies; lead and asbestos identified; moderate conditions

9 Bldgs.
Aberdeen Proving Ground
Aberdeen MD 21005
Landholding Agency: Army
Property Number: 21201210022
Status: Unutilized
Directions: E5771, E5772, E5774, E5779, E5782, E5800, E5804, E5824, E5872
Comments: Off-site removal only; sq. ft. varies; current use: varies; lead and asbestos identified; moderate conditions

7 Bldgs.
Aberdeen Proving Ground
Aberdeen MD 21005

Landholding Agency: Army
Property Number: 21201210023
Status: Unutilized
Directions: E5910, E5911, E5912, E5913, E5914, E5932, E5940,
Comments: Off-site removal only; sq. ft. varies; current use: varies; lead and asbestos identified; moderate conditions

7 Bldgs.
Aberdeen Proving Ground
Aberdeen MD 21005
Landholding Agency: Army
Property Number: 21201210024
Status: Unutilized
Directions: E5944, E5950, E6834, RAILA, RAILE, 02043, E5722
Comments: Off-site removal only; sq. ft. varies; current use: varies; lead and asbestos identified; moderate conditions

13 Bldgs.
Aberdeen Proving Ground
Aberdeen MD 21005
Landholding Agency: Army
Property Number: 21201210025
Status: Unutilized
Directions: 380, 440, 441, 464, 637, 724, 724A, 724D, 724E, 1101A, 2001, 2040, 2041
Comments: Off-site removal only; sq. ft. varies; current use: varies; lead and asbestos identified; moderate conditions

10 Bldgs.
Aberdeen Proving Ground
Aberdeen MD 21005
Landholding Agency: Army
Property Number: 21201210026
Status: Unutilized
Directions: 2042, 2308, 2312, 2314, 2333, 2338, 2351, 2354, 2431, 2432
Comments: Off-site removal only; sq. ft. varies; current use: varies; lead and asbestos identified; moderate conditions

9 Bldgs.
Aberdeen Proving Ground
Aberdeen MD 21005
Landholding Agency: Army
Property Number: 21201210027
Status: Unutilized
Directions: 2453, 2457, 2458, 3409, 3410, 3554, 4031, 4035, 4036
Comments: Off-site removal only; sq. ft. varies; current use: varies; lead and asbestos identified; moderate conditions

13 Bldgs.
Aberdeen Proving Ground
Aberdeen MD 21005
Landholding Agency: Army
Property Number: 21201210028
Status: Unutilized
Directions: E3236, E3107, E3109, E3156, E3221, E3222, E3223, E3224, E3226, E3230, E3232, E3234, E3265
Comments: Off-site removal only; sq. ft. varies; current use: varies; lead and asbestos identified; moderate conditions

8 Bldgs.
Aberdeen Proving Ground
Aberdeen MD 21005
Landholding Agency: Army
Property Number: 21201210029
Status: Unutilized
Directions: E1890, E1936, E1946, E1950, E1958, E2100, E2101, E2105
Comments: Off-site removal only; sq. ft. varies; current use: varies; lead and asbestos identified; moderate conditions

11 Bldgs
Aberdeen Proving Ground
Aberdeen MD 21005
Landholding Agency: Army
Property Number: 21201210030
Status: Unutilized
Directions: E2309, E2400, E2580, E3081, E3083, E3100, E3101, E3103, E3104, E3105, E3106
Comments: Off-site removal only; sq. ft. varies; current use: varies; lead and asbestos identified; moderate conditions

5 Bldgs.
Aberdeen Proving Ground
Aberdeen MD 21005
Landholding Agency: Army
Property Number: 21201210031
Status: Unutilized
Directions: 4302, 4303, 4316, 4317, E1607
Comments: Off-site removal only; sq. ft. varies; current use: varies; lead and asbestos identified; moderate conditions

Bldg. 00402
402 Blossom Point Rd.
Welcome MD 20693
Landholding Agency: Army
Property Number: 21201210056
Status: Unutilized
Comments: Off site removal only; recent use: storage; 54 sq. ft.

Bldg. 00517
517 Blossom Point Rd.
Welcome MD 20693
Landholding Agency: Army
Property Number: 21201210057
Status: Unutilized
Comments: Off-site removal only; 110 sf.; current use: range bldg.; need repairs

Bldg. 00603
Aldelphi Laboratory Center
Aldelphi MD 20783
Landholding Agency: Army
Property Number: 21201210058
Status: Unutilized
Comments: Off-site removal; 640 sf.; current use: storage; need repairs

Bldg. 604
Aldelphi Laboratory Center
Aldelphi MD 20783
Landholding Agency: Army
Property Number: 21201210060
Status: Unutilized
Comments: Off-site removal only; 375 sf.; current use: storage; need repairs

Bldg. 01557
Fort Detrick
Frederick MD
Landholding Agency: Army
Property Number: 21201210077
Status: Unutilized
Comments: Off-site removal only; 2,490 sf.; current use: Admin.; fair conditions

Bldg. 724B
Aberdeen Proving Ground
Aberdeen MD 21005
Landholding Agency: Army
Property Number: 21201220003
Status: Unutilized
Comments: Off-site removal only; 1 sf.; current use: safety shelter; moderate conditions; lead & asbestos identified; need remediation

Minnesota

18 Bldgs.
1245 Hwy 96 West
Arden Hills Army TRNG Site
Arden Hills MN 55112
Landholding Agency: Army
Property Number: 21201210059
Status: Unutilized
Directions: 12155, 12156, 12157, 01200, 01201, 01202, 01203, 01204, 01205, 01206, 04202, 11218, 11219, 11220, 11221, 11222, 11223, 04203
Comments: Off-site removal only, sf. varies; current use: storage; poor conditions-need repairs

Missouri

Bldg. T1497
Fort Leonard Wood
Ft. Leonard Wood MO 65473–5000
Landholding Agency: Army
Property Number: 21199420441
Status: Underutilized
Directions:
Comments: 4720 sq. ft., 2-story, presence of lead base paint, most recent use—admin/gen. purpose, off-site use only

Bldg. T2139
Fort Leonard Wood
Ft. Leonard Wood MO 65473–5000
Landholding Agency: Army
Property Number: 21199420446
Status: Underutilized
Directions:
Comments: 3663 sq. ft., 1-story, presence of lead base paint, most recent use—admin/gen. purpose, off-site use only

Bldg. T2385
Fort Leonard Wood
Ft. Leonard Wood MO 65473
Landholding Agency: Army
Property Number: 21199510115
Status: Excess
Directions:
Comments: 3158 sq. ft., 1-story, wood frame, most recent use—admin., to be vacated 8/95, off-site use only

Bldg. 2167
Fort Leonard Wood
Ft. Leonard Wood MO 65473–5000
Landholding Agency: Army
Property Number: 21199820179
Status: Unutilized
Directions:
Comments: 1296 sq. ft., presence of asbestos/lead paint, most recent use—admin., off-site use only

Bldgs. 2192, 2196, 2198
Fort Leonard Wood
Ft. Leonard Wood MO 65473–5000
Landholding Agency: Army
Property Number: 21199820183
Status: Unutilized
Directions:
Comments: 4720 sq. ft., presence of asbestos/lead paint, most recent use—barracks, off-site use only

12 Bldgs.
Fort Leonard Wood
Ft. Leonard Wood MO 65743–8944
Landholding Agency: Army
Property Number: 21200410110
Status: Unutilized
Directions: 07036, 07050, 07054, 07102, 07400, 07401, 08245, 08249, 08251, 08255, 08257, 08261

Comments: 7152 sq. ft. 6 plex housing quarters, potential contaminants, off-site use only

6 Bldgs.
Fort Leonard Wood
Ft. Leonard Wood MO 65743–8944
Landholding Agency: Army
Property Number: 21200410111
Status: Unutilized
Directions: 07044, 07106, 07107, 08260, 08281, 08300
Comments: 9520 sq ft., 8 plex housing quarters, potential contaminants, off-site use only

15 Bldgs.
Fort Leonard Wood
Ft. Leonard Wood MO 65743–8944
Landholding Agency: Army
Property Number: 21200410112
Status: Unutilized
Directions: 08242, 08243, 08246–08248, 08250, 08252–08254, 08256, 08258–08259, 08262–08263, 08265
Comments: 4784 sq ft., 4 plex housing quarters, potential contaminants, off-site use only

Bldgs 08283, 08285
Fort Leonard Wood
Ft. Leonard Wood MO 65743–8944
Landholding Agency: Army
Property Number: 21200410113
Status: Unutilized
Comments: 2240 sq ft., 2 plex housing quarters, potential contaminants, off-site use only

15 Bldgs.
Fort Leonard Wood
Ft. Leonard Wood MO 65743–0827
Landholding Agency: Army
Property Number: 21200410114
Status: Unutilized
Directions: 08267, 08269, 08271, 08273, 08275, 08277, 08279, 08290 08296, 08301
Comments: 4784 sq ft., 4 plex housing quarters, potential contaminants, off-site use only

Bldg 09432
Fort Leonard Wood
Ft. Leonard Wood MO 65743–8944
Landholding Agency: Army
Property Number: 21200410115
Status: Unutilized
Comments: 8724 sq ft., 6-plex housing quarters, potential contaminants, off-site use only

Bldgs. 5006 and 5013
Fort Leonard Wood
Ft. Leonard Wood MO 65743–8944
Landholding Agency: Army
Property Number: 21200430064
Status: Unutilized
Comments: 192 sq. ft., needs repair, most recent use—generator bldg., off-site use only

Bldgs. 13210, 13710
Fort Leonard Wood
Ft. Leonard Wood MO 65743–8944
Landholding Agency: Army
Property Number: 21200430065
Status: Unutilized
Comments: 144 sq. ft. each, needs repair, most recent use—communication, off-site use only

Montana

Bldg. 00405
Fort Harrison
Ft. Harrison MT 59636
Landholding Agency: Army
Property Number: 21200130099
Status: Unutilized
GSA Number:
Comments: 3467 sq. ft., most recent use—storage, security limitations

Bldg. T0066
Fort Harrison
Ft. Harrison MT 59636
Landholding Agency: Army
Property Number: 21200130100
Status: Unutilized
GSA Number:
Comments: 528 sq. ft., needs rehab, presence of asbestos, security limitations

Bldg. 00001
Sheridan Hall USARC
Helena MT 59601
Landholding Agency: Army
Property Number: 21200540093
Status: Unutilized
Comments: 19,321 sq. ft., most recent use—Reserve Center

Bldg. 00003
Sheridan Hall USARC
Helena MT 59601
Landholding Agency: Army
Property Number: 21200540094
Status: Unutilized
Comments: 1950 sq. ft., most recent use—maintenance/storage

New Jersey

22 Bldgs.
Picatinny Arsenal
Dover NJ 07806
Landholding Agency: Army
Property Number: 21201210032
Status: Unutilized
Directions: 630, 632, 635, 636, 638, 639, 655, 723, 946, 1221, 1512, 3013, 3030, 3032, 3040, 3154, 3164, 3175, 3303, 3576, 3626, 3628
Comments: Off-site removal only; sq. ft. varies, current use: varies; poor conditions-need repairs; contamination-needs remediation

17 Bldgs.
Picatinny Arsenal
Dover NJ 07806
Landholding Agency: Army
Property Number: 21201210033
Status: Unutilized
Directions: 75A, 614A, 623A, 623B, 623C, 623D, 623E, 623F, 636C, 636D, 637A, 639A, 640B, 641B, 641E, 1222D, 3029D
Comments: Off-site removal only; sq. ft. varies, current use: varies; poor conditions-need repairs; contamination-needs remediation

7 Bldgs.
Picatinny Arsenal
Dover NJ 07806
Landholding Agency: Army
Property Number: 21201210038
Status: Unutilized
Directions: 75, 99, 281, 332, 614, 615, 623
Comments: Off-site removal only; sq. ft. varies, current use: varies; poor conditions-need repairs; contamination-needs remediation

4 Bldgs.
Picatinny Arsenal
Dover NJ 07806
Landholding Agency: Army
Property Number: 21201220011
Status: Unutilized
Directions: 1179, 1179A, 1179C, 1179D
Comments: Off-site removal only; sf varies; usage varies; need repairs; contamination; remediation required; secured area; need prior approval to access property; contact Army for more details

New Mexico

Bldg. 34198
White Sands Missile Range
Dona Ana NM 88002
Landholding Agency: Army
Property Number: 21200230062
Status: Excess
GSA Number:
Comments: 107 sq. ft., most recent use—security, off-site use only

New York

Bldg. 1227
U.S. Military Academy
Highlands NY 10996–1592
Landholding Agency: Army
Property Number: 21200440074
Status: Unutilized
Comments: 3800 sq. ft., needs repair, possible asbestos/lead paint, most recent use—maintenance, off-site use only

Bldg. 2218
Stewart Newburg USARC
New Windsor NY 12553–9000
Landholding Agency: Army
Property Number: 21200510067
Status: Unutilized
Comments: 32,000 sq. ft., poor condition, requires major repairs, most recent use—storage/services

7 Bldgs.
Stewart Newburg USARC
New Windsor NY 12553–9000
Landholding Agency: Army
Property Number: 21200510068
Status: Unutilized
Directions: 2122, 2124, 2126, 2128, 2106, 2108, 2104
Comments: sq. ft. varies, poor condition, needs major repairs, most recent use—storage/services

Bldg. 1230
U.S. Army Garrison
Orange NY 10996
Landholding Agency: Army
Property Number: 21200940014
Status: Unutilized
Comments: 4538 sq. ft., possible asbestos/lead paint, most recent use—clubhouse, off-site use only

Bldg. 4802
Fort Drum
Jefferson NY 13602
Landholding Agency: Army
Property Number: 21201010019
Status: Unutilized
Comments: 3300 sq. ft., most recent use—hdgts. facility, off-site use only

Bldg. 4813
Fort Drum
Jefferson NY 13602
Landholding Agency: Army
Property Number: 21201010020
Status: Unutilized

Comments: 750 sq. ft., most recent use—wash rack, off-site use only

Bldg. 4814
Fort Drum
Jefferson NY 13602
Landholding Agency: Army
Property Number: 21201010021
Status: Unutilized
Comments: 2592 sq. ft., most recent use—item repair, off-site use only

Bldgs. 1240, 1255
Fort Drum
Jefferson NY 13602
Landholding Agency: Army
Property Number: 21201010022
Status: Unutilized
Comments: Various sq. ft., most recent use—vehicle maint. facility, off-site use only

6 Bldgs.
Fort Drum
Jefferson NY 13602
Landholding Agency: Army
Property Number: 21201010023
Status: Unutilized
Directions: 1248, 1250, 1276, 2361, 4816, 4817
Comments: Various sq. ft., most recent use—storage, off-site use only

Bldg. 1050
Fort Drum
Jefferson NY 13602
Landholding Agency: Army
Property Number: 21201010024
Status: Unutilized
Comments: 1493 sq. ft., most recent use—training, off-site use only

Bldg. 10791
Fort Drum
Jefferson NY 13602
Landholding Agency: Army
Property Number: 21201010025
Status: Unutilized
Comments: 72 sq. ft., most recent use—smoking shelter, off-site use only

6 Bldgs.
Ft. Drum
Watertown NY 13602
Landholding Agency: Army
Property Number: 21201110049
Status: Underutilized
Directions: 01000, 01001, 01003, 01008, 01010, 01012
Comments: Off-site removal only, multiple bldgs. w/ varies sq.ft., current use varies

21 Bldgs.
Ft. Drum
Ft. Drum NY 13602
Landholding Agency: Army
Property Number: 21201140026
Status: Unutilized
Directions: 10280, 10281, 10282, 10283, 10284, 10285, 10286, 10288, 10289, 10290, 10291, 10503, 10504, 10505, 10506, 10590, 10591, 10592, 10593, 10594, 10595
Comments: Off-site removal only; sq. ft. varies; current use: concrete pad

Bldg. 02713
Ft. Drum
Ft. Drum NY 13602
Landholding Agency: Army
Property Number: 21201140028
Status: Underutilized
Comments: Off-site removal only; 1,029 sq. ft.; need major repairs; current use: Administrative office

2 Bldgs.
Ft. Drum
Ft. Drum NY 13602
Landholding Agency: Army
Property Number: 21201140030
Status: Underutilized
Directions: 1444 and 1445
Comments: Off-site removal only; bldg. 1444 = 4,166 sq. ft.; bldg. 1445 = 7,219 sq. ft.; current use: varies; need extensive repairs to both bldgs.
Bridges 11 and 42

Fort Drum
Fort Drum NY 13602
Landholding Agency: Army
Property Number: 21201210079
Status: Unutilized
Comments: Off-site removal only, sf. varies; current use: varies; need repairs

Bldgs. 02700 and 22630
Fort Drum
Fort Drum NY 13602
Landholding Agency: Army
Property Number: 21201210080
Status: Underutilized
Comments: Off-site removal only, sf. varies; current use: varies; need repairs

Bldg. 1345
Ft. Drum
Ft. Drum NY
Landholding Agency: Army
Property Number: 21201220030
Status: Underutilized
Comments: Off-site removal only; 7,219 sf.; vehicle maint. shop; extensive repairs needed; secured area; need prior approval to access property

5 Properties
Ft. Drum
Ft. Drum NY 13602
Landholding Agency: Army
Property Number: 21201220031
Status: Unutilized
Directions: BRG02, BRG19, BRG38, BRG62, BRG63
Comments: Off-site removal only; sf. varies; bridge; poor conditions; needs repairs; secured area; prior approval needed to access properties

Building 191
First Street West
Ft. Drum NY 13602
Landholding Agency: Army
Property Number: 21201230005
Status: Unutilized
Comments: Off-site removal only; 5,922 sf.; use: Admin.; extensive structural damage; remediation required before occupying bldg.; secured area; contact Army to schedule appt. to access property

5 Buildings
Ft. Drum
Ft. Drum NY 13601
Landholding Agency: Army
Property Number: 21201230006
Status: Unutilized
Directions: 1454, 1456, 2443, 4890, 4893
Comments: Off-site removal only; sf. varies; use varies; extensive repairs needed due to age; secured area; contact Army re: details on accessing property

Bldg. 01565
1565 Patton Road
Camp Buckner
West Point NY 10996
Landholding Agency: Army
Property Number: 21201120098
Status: Underutilized
Comments: Off-site removal only; 3,600 sq. ft.; current use: warehouse

Bldg. 00705
705 Barry Road
West Point NY 10996
Landholding Agency: Army
Property Number: 21201120099
Status: Unutilized
Comments: Off-site removal only; 8,800 sq. ft.; current use; classroom

North Carolina

4 Bldgs.
Ft. Bragg
Ft. Bragg NC 28310
Landholding Agency: Army
Property Number: 21201220036
Status: Unutilized
Directions: A3938, A3940, A3942, A4338
Comments: Off-site removal only; sf. varies; usage varies; extensive repairs needed; public will have to go through security check each time to access property; approval needed to access and relocate bldgs.

Ohio

132
1155 Buckeye Rd.
Lima OH 45804
Landholding Agency: Army
Property Number: 21201230025
Status: Underutilized
Directions: Joint Systems Manufacturing Center
Comments: Off-site removal only; 2,284 sf.; use: storage; poor conditions; asbestos identified; secured area; contact Army re: accessibility requirements

Oklahoma

Bldg. T–838, Fort Sill
838 Macomb Road
Lawton OK 73503–5100
Landholding Agency: Army
Property Number: 21199220609
Status: Unutilized
Directions:
Comments: 151 sq. ft., wood frame, 1 story, and off-site removal only, most recent use—vet facility (quarantine stable).

Bldg. T–954, Fort Sill 954 Quinette Road
Lawton OK 73503–5100
Landholding Agency: Army
Property Number: 21199240659
Status: Unutilized
Directions:
Comments: 3571 sq. ft., 1 story wood frame, needs rehab, off-site use only, most recent use—motor repair shop.

Bldg. T–3325, Fort Sill
3325 Naylor Road
Lawton OK 73503–5100
Landholding Agency: Army
Property Number: 21199240681
Status: Unutilized
Directions:
Comments: 8832 sq. ft., 1 story wood frame, needs rehab, off-site use only, most recent use—warehouse.

Bldg. T–4226
Fort Sill
Lawton OK 73503

Landholding Agency: Army
Property Number: 21199440384
Status: Unutilized
Directions:
Comments: 114 sq. ft., 1-story wood frame, possible asbestos and lead paint, most recent use—storage, off-site use only

Bldg. P–1015, Fort Sill
null
Lawton OK 73501–5100
Landholding Agency: Army
Property Number: 21199520197
Status: Unutilized
Directions:
Comments: 15402 sq. ft., 1-story, most recent use—storage, off-site use only

Bldg. P–366, Fort Sill
null
Lawton OK 73503
Landholding Agency: Army
Property Number: 21199610740
Status: Unutilized
Directions:
Comments: 482 sq. ft., possible asbestos, most recent use—storage, off-site use only

Building P–5042
Fort Sill
Lawton OK 73503–5100
Landholding Agency: Army
Property Number: 21199710066
Status: Unutilized
Directions:
Comments: 119 sq. ft., possible asbestos and lead paint, most recent use—heat plant, off-site use only

4 Buildings
Fort Sill
Lawton OK 73503–5100
Landholding Agency: Army
Property Number: 21199710086
Status: Unutilized
Directions: T–6465, T–6466, T–6467, T–6468
Comments: Various sq. ft., possible asbestos and lead paint, most recent use—range support, off site use only

Bldg. T–810
Fort Sill
Lawton OK 73503–5100
Landholding Agency: Army
Property Number: 21199730350
Status: Unutilized
Directions:
Comments: 7205 sq. ft., possible asbestos/lead paint, most recent use—hay storage, off-site use only

Bldgs. T–837, T–839
Fort Sill
Lawton OK 73503–5100
Landholding Agency: Army
Property Number: 21199730351
Status: Unutilized
Directions:
Comments: Approx. 100 sq. ft. each, possible asbestos/lead paint, most recent use—storage, off-site use only

Bldg. P–934
Fort Sill
Lawton OK 73503–5100
Landholding Agency: Army
Property Number: 21199730353
Status: Unutilized
Directions:
Comments: 402 sq. ft., possible asbestos/lead paint, most recent use—storage, off-site use only

Bldgs. T–1468, T–1469
Fort Sill
Lawton OK 73503–5100
Landholding Agency: Army
Property Number: 21199730357
Status: Unutilized
Directions:
Comments: 114 sq. ft., possible asbestos/lead paint, most recent use—storage, off-site use only

Bldg. T–1470
Fort Sill
Lawton OK 73503–5100
Landholding Agency: Army
Property Number: 21199730358
Status: Unutilized
Directions:
Comments: 3120 sq. ft., possible asbestos/lead paint, most recent use—storage, off-site use only

Bldgs. T–1954, T–2022
Fort Sill
Lawton OK 73503–5100
Landholding Agency: Army
Property Number: 21199730362
Status: Unutilized
Directions:
Comments: Approx. 100 sq. ft. each, possible asbestos/lead paint, most recent use—storage, off-site use only

Bldg. T–2184
Fort Sill
Lawton OK 73503–5100
Landholding Agency: Army
Property Number: 21199730364
Status: Unutilized
Directions:
Comments: 454 sq. ft., possible asbestos/lead paint, most recent use—storage, off-site use only

Bldgs. T–2186, T–2188, T–2189
Fort Sill
Lawton OK 73503–5100
Landholding Agency: Army
Property Number: 21199730366
Status: Unutilized
Directions:
Comments: 1656–3583 sq. ft., possible asbestos/lead paints, most recent use—vehicle maint. shop, off-site use only

Bldg. T–2187
Fort Sill
Lawton OK 73503–5100
Landholding Agency: Army
Property Number: 21199730367
Status: Unutilized
Directions:
Comments: 1673 sq. ft., possible asbestos/lead paint, most recent use—storage, off-site use only

Bldgs. T–2291 thru T–2296
Fort Sill
Lawton OK 73503–5100
Landholding Agency: Army
Property Number: 21199730372
Status: Unutilized
Directions:
Comments: 400 sq. ft. each, possible asbestos/lead paint, most recent use—storage, off-site use only

Bldgs. T–3001, T–3006
Fort Sill
Lawton OK 73503–5100
Landholding Agency: Army
Property Number: 21199730383
Status: Unutilized
Directions:
Comments: Approx. 9300 sq. ft., possible asbestos/lead paint, most recent use—storage, off-site use only

Bldg. T–3314
Fort Sill
Lawton OK 73503–5100
Landholding Agency: Army
Property Number: 21199730385
Status: Unutilized
Directions:
Comments: 229 sq. ft., possible asbestos/lead paint, most recent use—office, off-site use only

Bldg. T–5041
Fort Sill
Lawton OK 73503–5100
Landholding Agency: Army
Property Number: 21199730409
Status: Unutilized
Directions:
Comments: 763 sq. ft., possible asbestos/lead paint, most recent use—storage, off-site use only

Bldg. T–5420
Fort Sill
Lawton OK 73503–5100
Landholding Agency: Army
Property Number: 21199730414
Status: Unutilized
Directions:
Comments: 189 sq. ft., possible asbestos/lead paint, most recent use—fuel storage, off-site use only

Bldg. T–7775
Fort Sill
Lawton OK 73503–5100
Landholding Agency: Army
Property Number: 21199730419
Status: Unutilized
Directions:
Comments: 1452 sq. ft., possible asbestos/lead paint, most recent use—private club, off-site use only

4 Bldgs.
Fort Sill
P–617, P–1114, P–1386, P–1608
Lawton OK 73503–5100
Landholding Agency: Army
Property Number: 21199910133
Status: Unutilized
GSA Number:
Comments: 106 sq. ft., possible asbestos/lead paint, most recent use—utility plant, off-site use only

Bldg. P–746
Fort Sill
Lawton OK 73503–5100
Landholding Agency: Army
Property Number: 21199910135
Status: Unutilized
GSA Number:
Comments: 6299 sq. ft., possible asbestos/lead paint, most recent use—admin., off-site use only

Bldg. P–2582
Fort Sill
Lawton OK 73503–5100
Landholding Agency: Army
Property Number: 21199910141
Status: Unutilized
GSA Number:

Comments: 3672 sq. ft., possible asbestos/lead paint, most recent use—admin., off-site use only

Bldg. P–2914
Fort Sill
Lawton OK 73503–5100
Landholding Agency: Army
Property Number: 21199910146
Status: Unutilized
GSA Number:
Comments: 1236 sq. ft., possible asbestos/lead paint, most recent use—storage, off-site use only

Bldg. P–5101
Fort Sill
Lawton OK 73503–5100
Landholding Agency: Army
Property Number: 21199910153
Status: Unutilized
GSA Number:
Comments: 82 sq. ft., possible asbestos/lead paint, most recent use—gas station, off-site use only

Bldg. S–6430
Fort Sill
Lawton OK 73503–5100
Landholding Agency: Army
Property Number: 21199910156
Status: Unutilized
GSA Number:
Comments: 2080 sq. ft., possible asbestos/lead paint, most recent use—range support, off-site use only

Bldg. T–6461
Fort Sill
Lawton OK 73503–5100
Landholding Agency: Army
Property Number: 21199910157
Status: Unutilized
GSA Number:
Comments: 200 sq. ft., possible asbestos/lead paint, most recent use—range support, off-site use only

Bldg. T–6462
Fort Sill
Lawton OK 73503–5100
Landholding Agency: Army
Property Number: 21199910158
Status: Unutilized
GSA Number:
Comments: 64 sq. ft., possible asbestos/lead paint, most recent use—control tower, off-site use only

Bldg. P–7230
Fort Sill
Lawton OK 73503–5100
Landholding Agency: Army
Property Number: 21199910159
Status: Unutilized
GSA Number:
Comments: 160 sq. ft., possible asbestos/lead paint, most recent use—transmitter bldg., off-site use only

Bldg. S–4023
Fort Sill
Lawton OK 73503–5100
Landholding Agency: Army
Property Number: 21200010128
Status: Unutilized
GSA Number:
Comments: 1200 sq. ft., possible asbestos/lead paint, most recent use—storage, off-site use only

Bldg. P–747
Fort Sill
Lawton OK 73503–5100
Landholding Agency: Army
Property Number: 21200120120
Status: Unutilized
GSA Number:
Comments: 9232 sq. ft., possible asbestos/lead paint, most recent use—lab, off-site use only

Bldg. P–842
Fort Sill
Lawton OK 73503–5100
Landholding Agency: Army
Property Number: 21200120123
Status: Unutilized
GSA Number:
Comments: 192 sq. ft., possible asbestos/lead paint, most recent use—storage, off-site use only

Bldg. T–911
Fort Sill
Lawton OK 73503–5100
Landholding Agency: Army
Property Number: 21200120124
Status: Unutilized
GSA Number:
Comments: 3080 sq. ft., possible asbestos/lead paint, most recent use—office, off-site use only

Bldg. P–1672
Fort Sill
Lawton OK 73503–5100
Landholding Agency: Army
Property Number: 21200120126
Status: Unutilized
GSA Number:
Comments: 1056 sq. ft., possible asbestos/lead paint, most recent use—storage, off-site use only

Bldg. S–2362
Fort Sill
Lawton OK 73503–5100
Landholding Agency: Army
Property Number: 21200120127
Status: Unutilized
GSA Number:
Comments: 64 sq. ft., possible asbestos/lead paint, most recent use—gatehouse, off-site use only

Bldg. P–2589
Fort Sill
Lawton OK 73503–5100
Landholding Agency: Army
Property Number: 21200120129
Status: Unutilized
GSA Number:
Comments: 3672 sq. ft., possible asbestos/lead paint, most recent use—storage, off-site use only

Bldgs. 00937, 00957
Fort Sill
Lawton OK 73501
Landholding Agency: Army
Property Number: 21200710104
Status: Unutilized
Comments: 1558 sq. ft., most recent use—storage shed, off-site use only

Bldg. 01514
Fort Sill
Lawton OK 73501
Landholding Agency: Army
Property Number: 21200710105
Status: Unutilized
Comments: 1602 sq. ft., most recent use—storage, off-site use only

Bldg. 05685
Fort Sill
Lawton OK 73501
Landholding Agency: Army
Property Number: 21200820152
Status: Unutilized
Comments: 24,072 sq. ft., concrete block/w brick, off-site use only

Bldg. 07480
Fort Sill
Lawton OK 73501
Landholding Agency: Army
Property Number: 21200920002
Status: Unutilized
Comments: 1200 sq. ft., most recent use—recreation, off-site use only

Bldgs. 01509, 01510
Fort Sill
Lawton OK 73501
Landholding Agency: Army
Property Number: 21200920060
Status: Unutilized
Comments: Various sq. ft., most recent use—vehicle maint. shop, off-site use only

4 Bldgs.
Fort Sill
2591, 2593, 2595, 2604
Lawton OK 73501
Landholding Agency: Army
Property Number: 21200920061
Status: Unutilized
Comments: Various sq. ft., most recent use—classroom/admin, off-site use only

Bldg. 06456
Fort Sill
Lawton OK 73501
Landholding Agency: Army
Property Number: 21200930003
Status: Unutilized
Comments: 413 sq. ft. range support facility, off-site use only

Fort Sill (5 Bldgs.)
2583–87 Currie Road
Lawton OK 73501–5100
Landholding Agency: Army
Property Number: 21201110022
Status: Unutilized
Directions: Bldgs: 02583, 02584, 02585, 02586, 02587
Comments: Off-site removal only, sq. ft. varies; current use varies

Fort Sill (5 Bldgs.)
Currie Road
Lawton OK 73501–5100
Landholding Agency: Army
Property Number: 21201110023
Status: Unutilized
Directions: Bldgs. 02588, 02769, 02770, 02771, 02950?
Comments: Off-site removal only, sq. ft. varies; current use varied

Bldgs. 02990 & 05020
Fort Sill
Lawton OK 73501–5100
Landholding Agency: Army
Property Number: 21201110024
Status: Unutilized
Comments: Off-site removal only, bldg. 02990—3,715 sq. ft. and bldg. 05020—6,682 sq. ft.; current use fast food facility and storage

2 Bldgs.
McAlester Army Ammo Plant
McAlester OK 74501

Landholding Agency: Army
Property Number: 21201210040
Status: Unutilized
Directions: 49B, 49C
Comments: Off-site removal only; sq. ft. varies; current use: passenger waiting shelter; fair conditions

B–96
McAlester Army Ammo Plant
McAlester OK 74501
Landholding Agency: Army
Property Number: 21201210041
Status: Unutilized
Comments: Off-site removal only; sq. ft. 432; current use: smoking shelter; poor conditions—need repairs

3 Bldgs
Bateman Rd, Fort Sill
Lawton OK 73501
Landholding Agency: Army
Property Number: 21201210089
Status: Unutilized
Directions: 1511, 1518, 1519
Comments: Off site removal only; various uses (dispatch bldgs and admin/shop control)

6 Bldgs.
Currie Rd, Fort Sill
Lawton OK 73501
Landholding Agency: Army
Property Number: 21201210090
Status: Unutilized
Directions: 2524, 2590, 2592, 2593, 2595, 2596
Comments: Off site removal only; various uses

4 Bldgs
Ringgold Rd, Fort Sill
Lawton OK 73501
Landholding Agency: Army
Property Number: 21201210091
Status: Unutilized
Directions: 2776, 2919, 2920, 2921
Comments: Off site removal only; various uses

9 Bldgs
Fort Sill
Lawton OK 73501
Landholding Agency: Army
Property Number: 21201210092
Status: Unutilized
Directions: 02914, 02924, 02927, 02930, 02936, 02952, 03685, 04702, 05485
Comments: Off site removal only; various uses

2 Bldgs
McAlester Army Ammo Plant
McAlester OK
Landholding Agency: Army
Property Number: 21201220018
Status: Unutilized
Directions: 662, 749
Comments: Off-site removal only; sf varies; usage varies; poor conditions; need repairs; secured area; need prior approval to access property

4 Buildings
Ft. Sill
Lawton OK 73501
Landholding Agency: Army
Property Number: 21201230052
Status: Unutilized
Directions: 2285, 3168, 2916, 2915
Comments: off-site removal only; sf. varies; use: varies; fair conditions; contact Army re: further details

Pennsylvania

Bldgs. 203 and 204
Tobyhanna Army Depot
Tobyhanna PA 18466
Landholding Agency: Army
Property Number: 21201210045
Status: Unutilized
Comments: Off-site removal only; sq. ft. varies; current use: varies; contamination possible; needs remediation

B–201
Tobyhanna Army Depot
Tobyhanna PA 18466
Landholding Agency: Army
Property Number: 21201210049
Status: Unutilized
Comments: Off-site removal only; 625 sf.; current use: garage; need repairs; lead base paint identified

B–202
Tobyhanna Army Depot
Tobyhanna PA
Landholding Agency: Army
Property Number: 21201210055
Status: Unutilized
Comments: Off-site removal only; 2,653 sf.; current use: residential; need repairs

19 Bldgs.
DLA Distribution
New Cumberland PA
Landholding Agency: Army
Property Number: 21201220006
Status: Underutilized
Directions: 12, 14, 17, 65, 69, 72, 73, 75, 77, 81, 293, 401, 403, 404, 900, 2007, 2009, 2013, 2020
Comments: Off-site removal only; sf. varies; usage varies; fair conditions; asbestos possible; need remediation; secured area; transferee needs prior approval to gain access; contact Army for more details

South Dakota

Bldg. 03001
Jonas H. Lien AFRC
Sioux Falls SD 57104
Landholding Agency: Army
Property Number: 21200740187
Status: Unutilized
Comments: 33282 sq. ft., most recent use—training center

Bldg. 03003
Jonas H. Lien AFRC
Sioux Falls SD 57104
Landholding Agency: Army
Property Number: 21200740188
Status: Unutilized
Comments: 4675 sq. ft., most recent use—vehicle maint. shop

Tennessee

Bldg. 530
VTS SMYRNA
Smyrna TN 37167
Landholding Agency: Army
Property Number: 21201220033
Status: Excess
Comments: Off-site removal only; 1,200sf; storage; need repairs; need prior approval to access property

Texas

Bldg. 7137, Fort Bliss
null
El Paso TX 79916
Landholding Agency: Army
Property Number: 21199640564
Status: Unutilized
Directions:
Comments: 35,736 sq. ft., 3-story, most recent use—housing, Off-site use only

Bldg. 92043
Fort Hood
Ft. Hood TX 76544
Landholding Agency: Army
Property Number: 21200020206
Status: Unutilized
GSA Number:
Comments: 450 sq. ft., most recent use—storage, Off-site use only

Bldg. 92044
Fort Hood
Ft. Hood TX 76544
Landholding Agency: Army
Property Number: 21200020207
Status: Unutilized
GSA Number:
Comments: 1920 sq. ft., most recent use—admin., Off-site use only

Bldg. 92045
Fort Hood
Ft. Hood TX 76544
Landholding Agency: Army
Property Number: 21200020208
Status: Unutilized
GSA Number:
Comments: 2108 sq. ft., most recent use—maint., Off-site use only

Bldgs. P6220, P6222
Fort Sam Houston
Camp Bullis
San Antonio TX
Landholding Agency: Army
Property Number: 21200330197
Status: Unutilized
GSA Number:
Comments: 384 sq. ft., most recent use—carport/storage, Off-site use only

Bldgs. P6224, P6226
Fort Sam Houston
Camp Bullis
San Antonio TX
Landholding Agency: Army
Property Number: 21200330198
Status: Unutilized
GSA Number:
Comments: 384 sq. ft., most recent use—carport/storage, Off-site use only

Bldg. 92039
Fort Hood
Ft. Hood TX 76544
Landholding Agency: Army
Property Number: 21200640101
Status: Excess
Comments: 80 sq. ft., most recent use—storage, Off-site use only

Bldgs. 04281, 04283
Fort Hood
Bell TX 76544
Landholding Agency: Army
Property Number: 21200720085
Status: Excess
Comments: 4000/8020 sq. ft., most recent use—storage shed, Off-site use only

Bldg. 04284
Fort Hood
Bell TX 76544

Landholding Agency: Army
Property Number: 21200720086
Status: Excess
Comments: 800 sq. ft., presence of asbestos, most recent use—storage shed, Off-site use only

Bldg. 04285
Fort Hood
Bell TX 76544
Landholding Agency: Army
Property Number: 21200720087
Status: Excess
Comments: 8000 sq. ft., most recent use—storage shed, Off-site use only

Bldg. 04286
Fort Hood
Bell TX 76544
Landholding Agency: Army
Property Number: 21200720088
Status: Excess
Comments: 36,000 sq. ft., presence of asbestos, most recent use—storage shed, Off-site use only

Bldg. 04291
Fort Hood
Bell TX 76544
Landholding Agency: Army
Property Number: 21200720089
Status: Excess
Comments: 6400 sq. ft., presence of asbestos, most recent use—storage shed, Off-site use only

Bldg. 4410
Fort Hood
Bell TX 76544
Landholding Agency: Army
Property Number: 21200720090
Status: Excess
Comments: 12,956 sq. ft., presence of asbestos, most recent use—simulation center, Off-site use only

Bldgs. 10031, 10032, 10033
Fort Hood
Bell TX 76544
Landholding Agency: Army
Property Number: 21200720091
Status: Excess
Comments: 2578/3383 sq. ft., presence of asbestos, most recent use—admin., Off-site use only

Bldg. 56435
Fort Hood
Bell TX 76544
Landholding Agency: Army
Property Number: 21200720093
Status: Excess
Comments: 3441 sq. ft., presence of asbestos, most recent use—barracks, off-site use only

Bldg. 05708
Fort Hood
Bell TX 76544
Landholding Agency: Army
Property Number: 21200720094
Status: Excess
Comments: 1344 sq. ft., most recent use—community center, off-site use only

Bldg. 93013
Fort Hood
Bell TX 76544
Landholding Agency: Army
Property Number: 21200720099
Status: Excess
Comments: 800 sq. ft., most recent use—club, off-site use only

4 Bldgs.
Fort Hood
Bell TX 76544
Landholding Agency: Army
Property Number: 21200810048
Status: Unutilized
Directions: 00229, 00230, 00231, 00232
Comments: Various sq. ft., presence of asbestos, most recent use—training aids center, off-site use only

Bldg. 00324
Fort Hood
Bell TX 76544
Landholding Agency: Army
Property Number: 21200810049
Status: Unutilized
Comments: 13,319 sq. ft., most recent use—roller skating rink, off-site use only

Bldgs. 00710, 00739, 00741
Fort Hood
Bell TX 76544
Landholding Agency: Army
Property Number: 21200810050
Status: Unutilized
Comments: Various sq. ft., presence of asbestos, most recent use—repair shop, off-site use only

Bldg. 00713
Fort Hood
Bell TX 76544
Landholding Agency: Army
Property Number: 21200810052
Status: Unutilized
Comments: 3200 sq. ft., presence of asbestos, most recent use—hdqts. bldg., off-site use only

Bldgs. 1938, 04229
Fort Hood
Bell TX 76544
Landholding Agency: Army
Property Number: 21200810053
Status: Unutilized
Comments: 2736/9000 sq. ft., presence of asbestos, most recent use—admin., off-site use only

Bldgs. 02218, 02220
Fort Hood
Bell TX 76544
Landholding Agency: Army
Property Number: 21200810054
Status: Unutilized
Comments: 7289/1456 sq. ft., presence of asbestos, most recent use—museum, off-site use only

Bldg. 0350
Fort Hood
Bell TX 76544
Landholding Agency: Army
Property Number: 21200810055
Status: Unutilized
Comments: 28,290 sq. ft., presence of asbestos, most recent use—veh. maint. shop, off-site use only

Bldg. 04449
Fort Hood
Bell TX 76544
Landholding Agency: Army
Property Number: 21200810056
Status: Unutilized
Comments: 3822 sq. ft., most recent use—police station, off-site use only

Bldg. 91077
Fort Hood
Bell TX 76544
Landholding Agency: Army
Property Number: 21200810057
Status: Unutilized
Comments: 3200 sq. ft., presence of asbestos, most recent use—educational facility, off-site use only

Bldg. 57005
Fort Hood
Bell TX 76544
Landholding Agency: Army
Property Number: 21200840073
Status: Excess
Comments: 500 sq. ft., presence of asbestos, most recent use—water supply/treatment, off-site use only

B–42
Fort Hood
Ft. Hood TX 76544
Landholding Agency: Army
Property Number: 21201210007
Status: Excess
Comments: Off-site removal only; 893 sq. ft.; current use: storage; asbestos identified

B–56182
Fort Hood
Ft. Hood TX 76544
Landholding Agency: Army
Property Number: 21201210008
Status: Excess
Comments: Off-site removal only; 392 sq. ft.; current use: shower bldg.; asbestos identified

2 Bldgs.
Fort Hood
Ft. Hood TX 76544
Landholding Agency: Army
Property Number: 21201210009
Status: Excess
Directions: 7060, 4403
Comments: Off-site removal only; sq. ft. varies; current use: varies; asbestos identified

B–2319
Fort Hood
Ft. Hood TX 76544
Landholding Agency: Army
Property Number: 21201210010
Status: Unutilized
Comments: Off-site removal only; 1,339 sq. ft.; current use: exchange cafe; asbestos identified

B–4237
Fort Hood
Ft. Hood TX 76544
Landholding Agency: Army
Property Number: 21201210011
Status: Unutilized
Comments: Off-site removal only; 7,840 sq. ft.; current use: storage; asbestos identified

2 Bldgs.
Fort Hood
Ft. Hood TX 76544
Landholding Agency: Army
Property Number: 21201210012
Status: Unutilized
Directions: 4238, 4239
Comments: Off-site removal only; sq. ft. varies; current use: varies; asbestos identified

6 Bldgs.
Fort Hood
Ft. Hood TX 76544
Landholding Agency: Army
Property Number: 21201210013

Status: Unutilized
Directions: 4240, 4241, 4253, 4254, 4271, 4444
Comments: Off-site removal only; sq. ft. varies; current use: varies; asbestos identified

2 Bldgs.
Fort Hood
Ft. Hood TX 76544
Landholding Agency: Army
Property Number: 21201210014
Status: Unutilized
Directions: 5652, 56272
Comments: Off-site removal only; sq. ft. varies; current use: varies

4 Bldgs.
Fort Hood
Ft. Hood TX 76544
Landholding Agency: Army
Property Number: 21201210015
Status: Unutilized
Directions: 4428, 4437, 4452, 56423
Comments: Off-site removal; sq. ft. varies; current use: varies; asbestos identified

B–1301
Ft. Bliss
Ft. Bliss TX 79916
Landholding Agency: Army
Property Number: 21201220001
Status: Underutilized
Comments: Off-site removal only; 18,739 sf.; current use: thrift shop; poor conditions; need repairs

Bldg. 7194
Ft. Bliss
Ft. Bliss TX 79916
Landholding Agency: Army
Property Number: 21201220002
Status: Unutilized
Comments: Off-site removal only; 2,125 sf.; current use: housing; poor conditions—need repairs; asbestos & lead identified; need remediation

2 Buildings
West Ft. Hood
Ft. Hood TX 76544
Landholding Agency: Army
Property Number: 21201230012
Status: Excess
Directions: 90047 & 92080
Comments: Off-site removal only; 1,680 sf. (90047);1,059 sf. (92080); restricted military installation; contact Army re: accessibility

6 Buildings
Ft. Hood
Ft. Hood TX 76544
Landholding Agency: Army
Property Number: 21201230057
Status: Excess
Directions: 9541, 4478, 9511, 41003, 41002, 70005
Comments: Off-site removal only; need repairs; asbestos identified in some bldgs.; restricted area; prior permission to access & relocate; contact Army for details on specific bldgs.

Utah

Bldg. 00001
Borgstrom Hall USARC
Ogden UT 84401
Landholding Agency: Army
Property Number: 21200740196
Status: Excess
Comments: 16543 sq. ft., most recent use—training center, off-site use only

Bldg. 00002
Borgstrom Hall USARC
Ogden UT 84401
Landholding Agency: Army
Property Number: 21200740197
Status: Excess
Comments: 3842 sq. ft., most recent use—vehicle maint. shop, off-site use only

Bldg. 00005
Borgstrom Hall USARC
Ogden UT 84401
Landholding Agency: Army
Property Number: 21200740198
Status: Excess
Comments: 96 sq. ft., most recent use—storage, off-site use only

3 Bldgs.
Dugway Proving Ground
Dugway UT 84022
Landholding Agency: Army
Property Number: 21201210093
Status: Unutilized
Directions: 5222, 5226, 5314
Comments: Recent use: Lodging; 2 Bldgs—16,050 sq. ft. and 1 Bldg—86,161 sq.ft.

Vermont

Bldg. 126
Ethan Allen Firing Range
Jericho VT 05465
Landholding Agency: Army
Property Number: 21201220035
Status: Unutilized
Comments: Off-site removal only; 1,680 sf.; Admin.; extremely poor conditions; need repairs

Virginia

Fort Story
null
Ft. Story VA 23459
Landholding Agency: Army
Property Number: 21200720065
Status: Unutilized
Comments: 525 sq. ft., most recent use—power plant, off-site use only

Bldg. 01633
Fort Eustis
Ft. Eustis VA 23604
Landholding Agency: Army
Property Number: 21200720076
Status: Unutilized
Comments: 240 sq. ft., most recent use—storage, off-site use only

Bldg. 02786
Fort Eustis
Ft. Eustis VA 23604
Landholding Agency: Army
Property Number: 21200720084
Status: Unutilized
Comments: 1596 sq. ft., most recent use—admin., off-site use only

Bldg. P0838
Fort Eustis
Ft. Eustis VA 23604
Landholding Agency: Army
Property Number: 21200830005
Status: Unutilized
Comments: 576 sq. ft., most recent use—rec shelter, off-site use only

8 Bldgs.
Ft. Belvoir
Ft. Belvoir VA 22060
Landholding Agency: Army
Property Number: 21201220004
Status: Excess
Directions: 808, 1150, 1197, 2303, 2903, 2905, 2907, 3137
Comments: Off-site removal only; sf. varies; usage varies; good to poor conditions; may require repairs; contact Army for more details on specific properties

Washington

Bldg. CO909, Fort Lewis
null
Ft. Lewis WA 98433–9500
Landholding Agency: Army
Property Number: 21199630205
Status: Unutilized
Directions:
Comments: 1984 sq. ft., possible asbestos/lead paint, most recent use—admin., off-site use only

Bldg. 1164, Fort Lewis
null
Ft. Lewis WA 98433–9500
Landholding Agency: Army
Property Number: 21199630213
Status: Unutilized
Directions:
Comments: 230 sq. ft., possible asbestos/lead paint, most recent use—storehouse, off-site use only

Bldg. 1307, Fort Lewis
null
Ft. Lewis WA 98433–9500
Landholding Agency: Army
Property Number: 21199630216
Status: Unutilized
Directions:
Comments: 1092 sq. ft., possible asbestos/lead paint, most recent use—storage, off-site use only

Bldg. 1309, Fort Lewis
null
Ft. Lewis WA 98433–9500
Landholding Agency: Army
Property Number: 21199630217
Status: Unutilized
Directions:
Comments: 1092 sq. ft., possible asbestos/lead paint, most recent use—storage, off-site use only

Bldg. 2167, Fort Lewis
null
Ft. Lewis WA 98433–9500
Landholding Agency: Army
Property Number: 21199630218
Status: Unutilized
Directions:
Comments: 288 sq. ft., possible asbestos/lead paint, most recent use—warehouse, off-site use only

Bldg. 4078, Fort Lewis
null
Ft. Lewis WA 98433–9500
Landholding Agency: Army
Property Number: 21199630219
Status: Unutilized
Directions:
Comments: 10200 sq. ft., needs rehab, possible asbestos/lead paint, most recent use—warehouse, off-site use only

Bldg. 9599, Fort Lewis
null
Ft. Lewis WA 98433–9500
Landholding Agency: Army

Property Number: 21199630220
Status: Unutilized
Directions:
Comments: 12366 sq. ft., possible asbestos/lead paint, most recent use—warehouse, off-site use only

Bldg. A1404, Fort Lewis
null
Ft. Lewis WA 98433
Landholding Agency: Army
Property Number: 21199640570
Status: Unutilized
Directions:
Comments: 557 sq. ft., needs rehab, most recent use—storage, off-site use only

Bldg. EO347
Fort Lewis
Ft. Lewis WA 98433
Landholding Agency: Army
Property Number: 21199710156
Status: Unutilized
Directions:
Comments: 1800 sq. ft., possible asbestos/lead paint, most recent use—office, off-site use only

Bldg. B1008, Fort Lewis
null
Ft. Lewis WA 98433
Landholding Agency: Army
Property Number: 21199720216
Status: Unutilized
Directions:
Comments: 7387 sq. ft., 2-story, needs rehab, possible asbestos/lead paint, most recent use—medical clinic, off-site use only

Bldgs. CO509, CO709, CO720
Fort Lewis
Ft. Lewis WA 98433
Landholding Agency: Army
Property Number: 21199810372
Status: Unutilized
Directions:
Comments: 1984 sq. ft., possible asbestos/lead paint, needs rehab, most recent use—storage, off-site use only

Bldg. 5162
Fort Lewis
Ft. Lewis WA 98433
Landholding Agency: Army
Property Number: 21199830419
Status: Unutilized
Directions:
Comments: 2360 sq. ft., needs repair, presence of asbestos/lead paint, most recent use—office, off-site use only

Bldg. 5224
Fort Lewis
Ft. Lewis WA 98433
Landholding Agency: Army
Property Number: 21199830433
Status: Unutilized
Directions:
Comments: 2360 sq. ft., needs repair, presence of asbestos/lead paint, most recent use—educ. fac., off-site use only

Bldg. U001B
Fort Lewis
Ft. Lewis WA 98433
Landholding Agency: Army
Property Number: 21199920237
Status: Excess
GSA Number:
Comments: 54 sq. ft., needs repair, presence of asbestos/lead paint, most recent use—control tower, off-site use only

Bldg. U001C
Fort Lewis
Ft. Lewis WA 98433
Landholding Agency: Army
Property Number: 21199920238
Status: Unutilized
GSA Number:
Comments: 960 sq. ft., needs repair, presence of asbestos/lead paint, most recent use—supply, off-site use only

10 Bldgs.
Fort Lewis
Ft. Lewis WA 98433
Landholding Agency: Army
Property Number: 21199920239
Status: Excess
GSA Number:
Directions: U002B, U002C, U005C, U015I, U016E, U019C, U022A, U028B, 0091A, U093C
Comments: 600 sq. ft., needs repair, presence of asbestos/lead paint, most recent use—range house, off-site use only

6 Bldgs.
Fort Lewis
Ft. Lewis WA 98433
Landholding Agency: Army
Property Number: 21199920240
Status: Unutilized
GSA Number:
Directions: U003A, U004B, U006C, U015B, U016B, U019B
Comments: 54 sq. ft., needs repair, presence of asbestos/lead paint, most recent use—control tower, off-site use only

Bldg. U004D
Fort Lewis
Ft. Lewis WA 98433
Landholding Agency: Army
Property Number: 21199920241
Status: Unutilized
GSA Number:
Comments: 960 sq. ft., needs repair, presence of asbestos/lead paint, most recent use—supply, off-site use only

Bldg. U005A
Fort Lewis
Ft. Lewis WA 98433
Landholding Agency: Army
Property Number: 21199920242
Status: Unutilized
GSA Number:
Comments: 360 sq. ft., needs repair, presence of asbestos/lead paint, most recent use—control tower, off-site use only

7 Bldgs.
Fort Lewis
Ft. Lewis WA 98433
Landholding Agency: Army
Property Number: 21199920245
Status: Excess
GSA Number:
Directions: U014A, U022B, U023A, U043B, U059B, U060A, U101A
Comments: Needs repair, presence of asbestos/lead paint, most recent use—ofc/tower/support, off-site use only

Bldg. U015J
Fort Lewis
Ft. Lewis WA 98433
Landholding Agency: Army
Property Number: 21199920246
Status: Excess
GSA Number:
Comments: 144 sq. ft., needs repair, presence of asbestos/lead paint, most recent use—tower, off-site use only

Bldg. U018B
Fort Lewis
Ft. Lewis WA 98433
Landholding Agency: Army
Property Number: 21199920247
Status: Unutilized
GSA Number:
Comments: 121 sq. ft., needs repair, presence of asbestos/lead paint, most recent use—range house, off-site use only

Bldg. U018C
Fort Lewis
Ft. Lewis WA 98433
Landholding Agency: Army
Property Number: 21199920248
Status: Unutilized
GSA Number:
Comments: 48 sq. ft., needs repair, presence of asbestos/lead paint, off-site use only

Bldg. U024D
Fort Lewis
Ft. Lewis WA 98433
Landholding Agency: Army
Property Number: 21199920250
Status: Unutilized
GSA Number:
Comments: 120 sq. ft., needs repair, presence of asbestos/lead paint, most recent use—ammo bldg., off-site use only

Bldg. U027A
Fort Lewis
Ft. Lewis WA
Landholding Agency: Army
Property Number: 21199920251
Status: Excess
GSA Number:
Comments: 64 sq. ft., needs repair, presence of asbestos/lead paint, most recent use—tire house, off-site use only

Bldg. U031A
Fort Lewis
Ft. Lewis WA 98433
Landholding Agency: Army
Property Number: 21199920253
Status: Excess
GSA Number:
Comments: 3,456 sq. ft., needs repair, presence of asbestos/lead paint, most recent use—line shed, off-site use only

Bldg. U031C
Fort Lewis
Ft. Lewis WA 98433
Landholding Agency: Army
Property Number: 21199920254
Status: Unutilized
GSA Number:
Comments: 32 sq. ft., needs repair, presence of asbestos/lead paint, off-site use only

Bldg. U040D
Fort Lewis
Ft. Lewis WA 98433
Landholding Agency: Army
Property Number: 21199920255
Status: Excess
GSA Number:
Comments: 800 sq. ft., needs repair, presence of asbestos/lead paint, most recent use—range house, off-site use only

Bldgs. U052C, U052H
Fort Lewis
Ft. Lewis WA 98433

Landholding Agency: Army
Property Number: 21199920256
Status: Excess
GSA Number:
Comments: Various sq. ft., needs repair, presence of asbestos/lead paint, most recent use—range house, off-site use only

Bldgs. U035A, U035B
Fort Lewis
Ft. Lewis WA 98433
Landholding Agency: Army
Property Number: 21199920257
Status: Excess
GSA Number:
Comments: 192 sq. ft., needs repair, presence of asbestos/lead paint, most recent use—shelter, off-site use only

Bldg. U035C
Fort Lewis
Ft. Lewis WA 98433
Landholding Agency: Army
Property Number: 21199920258
Status: Excess
GSA Number:
Comments: 242 sq. ft., needs repair, presence of asbestos/lead paint, most recent use—range house, off-site use only

Bldg. U039A
Fort Lewis
Ft. Lewis WA 98433
Landholding Agency: Army
Property Number: 21199920259
Status: Excess
GSA Number:
Comments: 36 sq. ft., needs repair, presence of asbestos/lead paint, most recent use—control tower, off-site use only

Bldg. U039B
Fort Lewis
Ft. Lewis WA 98433
Landholding Agency: Army
Property Number: 21199920260
Status: Excess
GSA Number:
Comments: 1,600 sq. ft., needs repair, presence of asbestos/lead paint, most recent use—grandstand/bleachers, off-site use only

Bldg. U039C
Fort Lewis
Ft. Lewis WA 98433
Landholding Agency: Army
Property Number: 21199920261
Status: Excess
GSA Number:
Comments: 600 sq. ft., needs repair, presence of asbestos/lead paint, most recent use—support, off-site use only

Bldg. U043A
Fort Lewis
Ft. Lewis WA 98433
Landholding Agency: Army
Property Number: 21199920262
Status: Excess
GSA Number:
Comments: 132 sq. ft., needs repair, presence of asbestos/lead paint, most recent use—range house, off-site use only

Bldg. U052A
Fort Lewis
Ft. Lewis WA 98433
Landholding Agency: Army
Property Number: 21199920263
Status: Excess
GSA Number:
Comments: 69 sq. ft., needs repair, presence of asbestos/lead paint, most recent use—tower, off-site use only

Bldg. U052E
Fort Lewis
Ft. Lewis WA 98433
Landholding Agency: Army
Property Number: 21199920264
Status: Excess
GSA Number:
Comments: 600 sq. ft., needs repair, presence of asbestos/lead paint, most recent use—storage, off-site use only

Bldg. U052G
Fort Lewis
Ft. Lewis WA 98433
Landholding Agency: Army
Property Number: 21199920265
Status: Excess
GSA Number:
Comments: 1,600 sq. ft., needs repair, presence of asbestos/lead paint, most recent use—shelter, off-site use only

3 Bldgs.
Fort Lewis
Ft. Lewis WA 98433
Landholding Agency: Army
Property Number: 21199920266
Status: Excess
GSA Number:
Directions:
U058A, U103A, U018A
Comments: 36 sq. ft., needs repair, presence of asbestos/lead paint, most recent use—control tower, off-site use only

Bldg. U059A
Fort Lewis
Ft. Lewis WA 98433
Landholding Agency: Army
Property Number: 21199920267
Status: Excess
GSA Number:
Comments: 16 sq. ft., needs repair, presence of asbestos/lead paint, most recent use—tower, off-site use only

Bldg. U093B
Fort Lewis
Ft. Lewis WA 98433
Landholding Agency: Army
Property Number: 21199920268
Status: Excess
GSA Number:
Comments: 680 sq. ft., needs repair, presence of asbestos/lead paint, most recent use—range house, off-site use only

4 Bldgs.
Fort Lewis
Ft. Lewis WA 98433
Landholding Agency: Army
Property Number: 21199920269
Status: Excess
GSA Number:
Directions:
U101B, U101C, U507B, U557A
Comments: 400 sq. ft., needs repair, presence of asbestos/lead paint, off-site use only

Bldg. U110B
Fort Lewis
Ft. Lewis WA 98433
Landholding Agency: Army
Property Number: 21199920272
Status: Excess
GSA Number:
Comments: 138 sq. ft., needs repair, presence of asbestos/lead paint, most recent use—support, off-site use only

6 Bldgs.
Fort Lewis
Ft. Lewis WA 98433
Landholding Agency: Army
Property Number: 21199920273
Status: Excess
GSA Number:
Directions:
U111A, U015A, U024E, U052F, U109A, U110A
Comments: 1,000 sq. ft., needs repair, presence of asbestos/lead paint, most recent use—support/shelter/mess, off-site use only

Bldg. U112A
Fort Lewis
Ft. Lewis WA 98433
Landholding Agency: Army
Property Number: 21199920274
Status: Excess
GSA Number:
Comments: 1,600 sq. ft., needs repair, presence of asbestos/lead paint, most recent use—shelter, off-site use only

Bldg. U115A
Fort Lewis
Ft. Lewis WA 98433
Landholding Agency: Army
Property Number: 21199920275
Status: Excess
GSA Number:
Comments: 36 sq. ft., needs repair, presence of asbestos/lead paint, most recent use—tower, off-site use only

Bldg. U507A
Fort Lewis
Ft. Lewis WA 98433
Landholding Agency: Army
Property Number: 21199920276
Status: Excess
GSA Number:
Comments: 400 sq. ft., needs repair, presence of asbestos/lead paint, most recent use—support, off-site use only

Bldg. C0120
Fort Lewis
Ft. Lewis WA 98433
Landholding Agency: Army
Property Number: 21199920281
Status: Excess
GSA Number:
Comments: 384 sq. ft., needs repair, presence of asbestos/lead paint, most recent use—scale house, off-site use only

Bldg. 01205
Fort Lewis
Ft. Lewis WA 98433
Landholding Agency: Army
Property Number: 21199920290
Status: Excess
GSA Number:
Comments: 87 sq. ft., needs repair, presence of asbestos/lead paint, most recent use—storehouse, off-site use only

Bldg. 01259
Fort Lewis
Ft. Lewis WA 98433
Landholding Agency: Army
Property Number: 21199920291
Status: Excess
GSA Number:

Comments: 16 sq. ft., needs repair, presence of asbestos/lead paint, most recent use—storage, off-site use only

Bldg. 01266
Fort Lewis
Ft. Lewis WA 98433
Landholding Agency: Army
Property Number: 21199920292
Status: Excess
GSA Number:
Comments: 45 sq. ft., needs repair, presence of asbestos/lead paint, most recent use—shelter, off-site use only

Bldg. 1445
Fort Lewis
Ft. Lewis WA 98433
Landholding Agency: Army
Property Number: 21199920294
Status: Excess
GSA Number:
Comments: 144 sq. ft., needs repair, presence of asbestos/lead paint, most recent use—generator bldg., off-site use only

Bldgs. 03091, 03099
Fort Lewis
Ft. Lewis WA 98433
Landholding Agency: Army
Property Number: 21199920296
Status: Excess
GSA Number:
Comments: Various sq. ft., needs repair, presence of asbestos/lead paint, most recent use—sentry station, off-site use only

Bldg. 4040
Fort Lewis
Ft. Lewis WA 98433
Landholding Agency: Army
Property Number: 21199920298
Status: Excess
GSA Number:
Comments: 8326 sq. ft., needs repair, presence of asbestos/lead paint, most recent use—shed, off-site use only

Bldgs. 4072, 5104
Fort Lewis
Ft. Lewis WA 98433
Landholding Agency: Army
Property Number: 21199920299
Status: Excess
GSA Number:
Comments: 24/36 sq. ft., needs repair, presence of asbestos/lead paint, off-site use only

Bldg. 4295
Fort Lewis
Ft. Lewis WA 98433
Landholding Agency: Army
Property Number: 21199920300
Status: Excess
GSA Number:
Comments: 48 sq. ft., needs repair, presence of asbestos/lead paint, most recent use—storage, off-site use only

Bldg. 6191
Fort Lewis
Ft. Lewis WA 98433
Landholding Agency: Army
Property Number: 21199920303
Status: Excess
GSA Number:
Comments: 3663 sq. ft., needs repair, presence of asbestos/lead paint, most recent use—exchange branch, off-site use only

Bldgs. 08076, 08080
Fort Lewis
Ft. Lewis WA 98433
Landholding Agency: Army
Property Number: 21199920304
Status: Excess
GSA Number:
Comments: 3660/412 sq. ft., needs repair, presence of asbestos/lead paint, off-site use only

Bldg. 08093
Fort Lewis
Ft. Lewis WA 98433
Landholding Agency: Army
Property Number: 21199920305
Status: Excess
GSA Number:
Comments: 289 sq. ft., needs repair, presence of asbestos/lead paint, most recent use—boat storage, off-site use only

Bldg. 8279
Fort Lewis
Ft. Lewis WA 98433
Landholding Agency: Army
Property Number: 21199920306
Status: Excess
GSA Number:
Comments: 210 sq. ft., needs repair, presence of asbestos/lead paint, most recent use—fuel disp. fac., off-site use only

Bldgs. 8280, 8291
Fort Lewis
Ft. Lewis WA 98433
Landholding Agency: Army
Property Number: 21199920307
Status: Excess
GSA Number:
Comments: 800/464 sq. ft., needs repair, presence of asbestos/lead paint, most recent use—storage, off-site use only

Bldg. 8956
Fort Lewis
Ft. Lewis WA 98433
Landholding Agency: Army
Property Number: 21199920308
Status: Excess
GSA Number:
Comments: 100 sq. ft., needs repair, presence of asbestos/lead paint, most recent use—storage, off-site use only

Bldg. 9530
Fort Lewis
Ft. Lewis WA 98433
Landholding Agency: Army
Property Number: 21199920309
Status: Excess
GSA Number:
Comments: 64 sq. ft., needs repair, presence of asbestos/lead paint, most recent use—sentry station, off-site use only

Bldg. 9574
Fort Lewis
Ft. Lewis WA 98433
Landholding Agency: Army
Property Number: 21199920310
Status: Excess
GSA Number:
Comments: 6005 sq. ft., needs repair, presence of asbestos/lead paint, most recent use—veh. shop., off-site use only

Bldg. 9596
Fort Lewis
Ft. Lewis WA 98433
Landholding Agency: Army
Property Number: 21199920311
Status: Excess
GSA Number:
Comments: 36 sq. ft., needs repair, presence of asbestos/lead paint, most recent use—gas station, off-site use only

4 Bldgs
Joint Base Louis McChord
Lewis-McChord WA 98433
Landholding Agency: Army
Property Number: 21201210087
Status: Unutilized
Directions: J0053, 00794, 09791, 09989
Comments: Off-site removal only; sf varies; current use: varies; need repairs

7903
Plant Rd.
JBLM WA 98433
Landholding Agency: Army
Property Number: 21201230023
Status: Unutilized
Comments: 169 sf.; use: access control facility; extensive repairs needed; secured area; contact Army re: accessibility requirements

E1302 & R7610
JBLM
JBLM WA 98433
Landholding Agency: Army
Property Number: 21201230028
Status: Unutilized
Comments: 80 sf. (E1302); 503 sf. (R7610); use: varies; major repairs needed; secured area; contact Army re: accessibility requirements

4 Buildings
Main Post
Ft. Lewis WA 98433
Landholding Agency: Army
Property Number: 21201230042
Status: Underutilized
Directions: 3112,3114,3115,3116
Comments: Off-site removal only; sf. varies; use: Admin./Barracks; major renovations required; contamination; secured area; access pass required from security office bldg. 6901-main gate 120 off I5

Wisconsin

21157
South J Street
Ft. McCoy WI 54656
Landholding Agency: Army
Property Number: 21201230045
Status: Unutilized
Comments: Off-site removal only; 704 sf.; use: rd. salt storage; poor conditions; transferre required to obtain real estate document authorizing access & removal; contact Army for further details

Land

Maryland

2 acres
Fort Meade
Odenton Rd/Rt 175
Ft. Meade MD 20755
Landholding Agency: Army
Property Number: 21200640095
Status: Unutilized
Comments: Light industrial

16 acres
Fort Meade
Rt 198/Airport Road
Ft. Meade MD 20755
Landholding Agency: Army
Property Number: 21200640096

Status: Unutilized
Comments: Light industrial

Ohio

Defense Supply Center
Columbus OH 43216–5000
Landholding Agency: Army
Property Number: 21200340094
Status: Excess
GSA Number:
Comments: 11 acres, railroad access

Tennessee

Parcel No. 1
Fort Campbell
Tract No. 13M–3
Montgomery TN 42223
Landholding Agency: Army
Property Number: 21200920003
Status: Excess
Comments: 6.89 acres/thick vegetation

Parcel No. 2
Fort Campbell
Tract Nos. 12M–16B & 13M–3
Montgomery TN 42223
Landholding Agency: Army
Property Number: 21200920004
Status: Excess
Comments: 3.41 acres/wooded

Parcel No. 3
Fort Campbell
Tract No. 12M–4
Montgomery TN 42223
Landholding Agency: Army
Property Number: 21200920005
Status: Excess
Comments: 6.56 acre/wooded

Parcel No. 4
Fort Campbell
Tract Nos. 10M–22 &10M–23
Montgomery TN 42223
Landholding Agency: Army
Property Number: 21200920006
Status: Excess
Comments: 5.73 acres/wooded

Parcel No. 5
Fort Campbell
Tract No. 10M–20
Montgomery TN 42223
Landholding Agency: Army
Property Number: 21200920007
Status: Excess
Comments: 3.86 acres/wooded

Parcel No. 7
Fort Campbell
Tract No. 10M–10
Montgomery TN 42223
Landholding Agency: Army
Property Number: 21200920008
Status: Excess
Comments: 9.47 acres/wooded

Parcel No. 8
Fort Campbell
Tract No. 8M–7
Montgomery TN 42223
Landholding Agency: Army
Property Number: 21200920009
Status: Excess
Comments: 15.13 acres/wooded

Parcel No. 6
Fort Campbell
Hwy 79
Montgomery TN 42223
Landholding Agency: Army
Property Number: 21200940013
Status: Excess
Comments: 4.55 acres, wooded w/dirt road/fire break

Texas

1 acre
Fort Sam Houston
San Antonio TX 78234
Landholding Agency: Army
Property Number: 21200440075
Status: Excess
Comments: 1 acre, grassy area

Alabama

Bldg. 30105
Fort Rucker
Ft. Rucker AL 36362
Landholding Agency: Army
Property Number: 21200510052
Status: Excess
Comments: 4100 sq. ft., most recent use—admin., off-site use only

Arizona

Bldg. 22529
Fort Huachuca
Cochise AZ 85613–7010
Landholding Agency: Army
Property Number: 21200520077
Status: Excess
Comments: 2543 sq. ft., most recent use—storage, off-site use only

Bldg. 22541
Fort Huachuca
Cochise AZ 85613–7010
Landholding Agency: Army
Property Number: 21200520078
Status: Excess
Comments: 1300 sq. ft., most recent use—storage, off-site use only

Bldg. 30020
Fort Huachuca
Cochise AZ 85613–7010
Landholding Agency: Army
Property Number: 21200520079
Status: Excess
Comments: 1305 sq. ft., most recent use—storage, off-site use only

Bldg. 30021
Fort Huachuca
Cochise AZ 85613–7010
Landholding Agency: Army
Property Number: 21200520080
Status: Excess
Comments: 144 sq. ft., most recent use—storage, off-site use only

Bldg. 22040
Fort Huachuca
Cochise AZ 85613
Landholding Agency: Army
Property Number: 21200540076
Status: Excess
Comments: 1131 sq. ft., presence of asbestos/lead paint, most recent use—storage, off-site use only

Bldg. 22540
Fort Huachuca
Cochise AZ 85613–7010
Landholding Agency: Army
Property Number: 21200620067
Status: Excess
Comments: 958 sq. ft., most recent use—storage, off-site use only

Colorado

Bldg. S6285
Fort Carson
Ft. Carson CO 80913
Landholding Agency: Army
Property Number: 21200420176
Status: Unutilized
Comments: 19,478 sq. ft., most recent use—admin., off-site use only

Georgia

Bldg. T201
Hunter Army Airfield
Garrison GA 31409
Landholding Agency: Army
Property Number: 21200420002
Status: Excess
Comments: 1828 sq. ft., most recent use—credit union, off-site use only

Bldg. T234
Hunter Army Airfield
Garrison GA 31409
Landholding Agency: Army
Property Number: 21200420008
Status: Excess
Comments: 2624 sq. ft., most recent use—admin., off-site use only

Bldg. T702
Hunter Army Airfield
Garrison GA 31409
Landholding Agency: Army
Property Number: 21200420010
Status: Excess
Comments: 9190 sq. ft., most recent use—storage, off-site use only

Bldg. T703
Hunter Army Airfield
Garrison GA 31409
Landholding Agency: Army
Property Number: 21200420011
Status: Excess
Comments: 9190 sq. ft., most recent use—storage, off-site use only

Bldg. T704
Hunter Army Airfield
Garrison GA 31409
Landholding Agency: Army
Property Number: 21200420012
Status: Excess
Comments: 9190 sq. ft., most recent use—storage, off-site use only

Bldg. P813
Hunter Army Airfield
Garrison GA 31409
Landholding Agency: Army
Property Number: 21200420013
Status: Excess
Comments: 43,055 sq. ft., most recent use—maint. hanger/Co Hq., off-site use only

Bldgs. S843, S844, S845
Hunter Army Airfield
Garrison GA 31409
Landholding Agency: Army
Property Number: 21200420014
Status: Excess
Comments: 9383 sq. ft., most recent use—maint hanger, off-site use only

Bldg. P925
Hunter Army Airfield
Garrison GA 31409
Landholding Agency: Army
Property Number: 21200420015
Status: Excess
Comments: 27,681 sq. ft., most recent use—fitness center, off-site use only

Bldg. P1277
Hunter Army Airfield

Garrison GA 31409
Landholding Agency: Army
Property Number: 21200420024
Status: Excess
Comments: 13,981 sq. ft., most recent use—barracks/dining, off-site use only

Bldg. T1412
Hunter Army Airfield
Garrison GA 31409
Landholding Agency: Army
Property Number: 21200420025
Status: Excess
Comments: 9186 sq. ft., most recent use—warehouse, off-site use only

Bldg. 8658
Hunter Army Airfield
Garrison GA 31409
Landholding Agency: Army
Property Number: 21200420029
Status: Excess
Comments: 8470 sq. ft., most recent use—storage, off-site use only

Bldg. 8659
Hunter Army Airfield
Garrison GA 31409
Landholding Agency: Army
Property Number: 21200420030
Status: Excess
Comments: 8470 sq. ft., most recent use—storage, off-site use only

Bldgs. 8675, 8676
Hunter Army Airfield
Garrison GA 31409
Landholding Agency: Army
Property Number: 21200420031
Status: Excess
Comments: 4000 sq. ft., most recent use—ship/recv facility, off-site use only

Bldg. 5993
Fort Benning
Ft. Benning GA 31905
Landholding Agency: Army
Property Number: 21200420041
Status: Excess
Comments: 960 sq. ft., most recent use—storage, off-site use only

Bldg. 5994
Fort Benning
Ft. Benning GA 31905
Landholding Agency: Army
Property Number: 21200420042
Status: Excess
Comments: 2016 sq. ft., most recent use—ammo storage, off-site use only

Bldg. 5995
Fort Benning
Ft. Benning GA 31905
Landholding Agency: Army
Property Number: 21200420043
Status: Excess
Comments: 114 sq. ft., most recent use—storage, off-site use only

Bldg. T01
Fort Stewart
Ft. Stewart GA 31314
Landholding Agency: Army
Property Number: 21200420181
Status: Excess
Comments: 11,682 sq. ft., most recent use—admin., off-site use only

Bldg. T04
Fort Stewart
Ft. Stewart GA 31314
Landholding Agency: Army
Property Number: 21200420182
Status: Excess
Comments: 8292 sq. ft., most recent use—admin., off-site use only

Bldg. T05
Fort Stewart
Ft. Stewart GA 31314
Landholding Agency: Army
Property Number: 21200420183
Status: Excess
Comments: 7992 sq. ft., most recent use—admin., off-site use only

Bldg. T06
Fort Stewart
Ft. Stewart GA 31314
Landholding Agency: Army
Property Number: 21200420184
Status: Excess
Comments: 3305 sq. ft., most recent use—communication center, off-site use only

Bldg. T55
Fort Stewart
Ft. Stewart GA 31314
Landholding Agency: Army
Property Number: 21200420187
Status: Excess
Comments: 6490 sq. ft., most recent use—admin., off-site use only

Bldg. T85
Fort Stewart
Ft. Stewart GA 31314
Landholding Agency: Army
Property Number: 21200420188
Status: Excess
Comments: 3283 sq. ft., most recent use—post chapel, off-site use only

Bldg. T131
Fort Stewart
Ft. Stewart GA 31314
Landholding Agency: Army
Property Number: 21200420189
Status: Excess
Comments: 4720 sq. ft., most recent use—admin., off-site use only

Bldg. T132
Fort Stewart
Ft. Stewart GA 31314
Landholding Agency: Army
Property Number: 21200420190
Status: Excess
Comments: 4720 sq. ft., most recent use—admin., off-site use only

Bldg. T157
Fort Stewart
Ft. Stewart GA 31314
Landholding Agency: Army
Property Number: 21200420191
Status: Excess
Comments: 1440 sq. ft., most recent use—education center, off-site use only

Bldg. 01002
Fort Stewart
Ft. Stewart GA 31314
Landholding Agency: Army
Property Number: 21200420197
Status: Excess
Comments: 9267 sq. ft., most recent use—maintenance shop, off-site use only

Bldg. 01003
Fort Stewart
Ft. Stewart GA 31314
Landholding Agency: Army
Property Number: 21200420198
Status: Excess
Comments: 9267 sq. ft., most recent use—admin, off-site use only

Bldg. 19101
Fort Stewart
Ft. Stewart GA 31314
Landholding Agency: Army
Property Number: 21200420215
Status: Excess
Comments: 6773 sq. ft., most recent use—simulator bldg., off-site use only

Bldg. 19102
Fort Stewart
Ft. Stewart GA 31314
Landholding Agency: Army
Property Number: 21200420216
Status: Excess
Comments: 3250 sq. ft., most recent use—simulator bldg., off-site use only

Bldg. T19111
Fort Stewart
Ft. Stewart GA 31314
Landholding Agency: Army
Property Number: 21200420217
Status: Excess
Comments: 1440 sq. ft., most recent use—admin., off-site use only

Bldg. 19112
Fort Stewart
Ft. Stewart GA 31314
Landholding Agency: Army
Property Number: 21200420218
Status: Excess
Comments: 1344 sq. ft., most recent use—storage, off-site use only

Bldg. 19113
Fort Stewart
Ft. Stewart GA 31314
Landholding Agency: Army
Property Number: 21200420219
Status: Excess
Comments: 1440 sq. ft., most recent use—admin., off-site use only

Bldg. T19201
Fort Stewart
Ft. Stewart GA 31314
Landholding Agency: Army
Property Number: 21200420220
Status: Excess
Comments: 960 sq. ft., most recent use—physical fitness center, off-site use only

Bldg. 19202
Fort Stewart
Ft. Stewart GA 31314
Landholding Agency: Army
Property Number: 21200420221
Status: Excess
Comments: 1210 sq. ft., most recent use—community center, off-site use only

Bldg. 19204 thru 19207
Fort Stewart
Ft. Stewart GA 31314
Landholding Agency: Army
Property Number: 21200420222
Status: Excess
Comments: 960 sq. ft., most recent use—admin., off-site use only

Bldgs. 19208 thru 19211
Fort Stewart
Ft. Stewart GA 31314
Landholding Agency: Army
Property Number: 21200420223
Status: Excess
Comments: 1540 sq. ft., most recent use—general installation bldg., off-site use only

Bldg. 19212
Fort Stewart
Ft. Stewart GA 31314
Landholding Agency: Army
Property Number: 21200420224
Status: Excess
Comments: 1248 sq. ft., off-site use only

Bldg. 19213
Fort Stewart
Ft. Stewart GA 31314
Landholding Agency: Army
Property Number: 21200420225
Status: Excess
Comments: 1540 sq. ft., most recent use—general installation bldg., off-site use only

Bldg. 19214
Fort Stewart
Ft. Stewart GA 31314
Landholding Agency: Army
Property Number: 21200420226
Status: Excess
Comments: 1796 sq. ft., most recent use—transient UPH, off-site use only

Bldg. 19215
Fort Stewart
Ft. Stewart GA 31314
Landholding Agency: Army
Property Number: 21200420227
Status: Excess
Comments: 1948 sq. ft., most recent use—transient UPH, off-site use only

Bldg. 19216
Fort Stewart
Ft. Stewart GA 31314
Landholding Agency: Army
Property Number: 21200420228
Status: Excess
Comments: 1540 sq. ft., most recent use—transient UPH, off-site use only

Bldg. 19217
Fort Stewart
Ft. Stewart GA 31314
Landholding Agency: Army
Property Number: 21200420229
Status: Excess
Comments: 120 sq. ft., most recent use—nav aids bldg., off-site use only

Bldg. 19218
Fort Stewart
Ft. Stewart GA 31314
Landholding Agency: Army
Property Number: 21200420230
Status: Excess
Comments: 2925 sq. ft., most recent use—general installation bldg., off-site use only

Bldgs. 19219, 19220
Fort Stewart
Ft. Stewart GA 31314
Landholding Agency: Army
Property Number: 21200420231
Status: Excess
Comments: 1200 sq. ft., most recent use—general installation bldg., off-site use only

Bldg. 19223
Fort Stewart
Ft. Stewart GA 31314
Landholding Agency: Army
Property Number: 21200420232
Status: Excess
Comments: 6433 sq. ft., most recent use—transient UPH, off-site use only

Bldg. 19225
Fort Stewart
Ft. Stewart GA 31314
Landholding Agency: Army
Property Number: 21200420233
Status: Excess
Comments: 4936 sq. ft., most recent use—dining facility, off-site use only

Bldg. 19226
Fort Stewart
Ft. Stewart GA 31314
Landholding Agency: Army
Property Number: 21200420234
Status: Excess
Comments: 136 sq. ft., most recent use—general purpose installation bldg., off-site use only

Bldg. T19228
Fort Stewart
Ft. Stewart GA 31314
Landholding Agency: Army
Property Number: 21200420235
Status: Excess
Comments: 400 sq. ft., most recent use—admin., off-site use only

Bldg. 19229
Fort Stewart
Ft. Stewart GA 31314
Landholding Agency: Army
Property Number: 21200420236
Status: Excess
Comments: 640 sq. ft., most recent use—vehicle shed, off-site use only

Bldg. 19232
Fort Stewart
Ft. Stewart GA 31314
Landholding Agency: Army
Property Number: 21200420237
Status: Excess
Comments: 96 sq. ft., most recent use—general purpose installation, off-site use only

Bldg. 19233
Fort Stewart
Ft. Stewart GA 31314
Landholding Agency: Army
Property Number: 21200420238
Status: Excess
Comments: 48 sq. ft., most recent use—fire support, off-site use only

Bldg. 19236
Fort Stewart
Ft. Stewart GA 31314
Landholding Agency: Army
Property Number: 21200420239
Status: Excess
Comments: 1617 sq. ft., most recent use—transient UPH, off-site use only

Bldg. 19238
Fort Stewart
Ft. Stewart GA 31314
Landholding Agency: Army
Property Number: 21200420240
Status: Excess
Comments: 738 sq. ft., off-site use only

Bldg. 00051
Fort Stewart
Liberty GA 31314
Landholding Agency: Army
Property Number: 21200520087
Status: Excess
Comments: 3196 sq. ft., most recent use—court room, off-site use only

Bldg. 00052
Fort Stewart
Liberty GA 31314
Landholding Agency: Army
Property Number: 21200520088
Status: Excess
Comments: 1250 sq. ft., most recent use—admin., off-site use only

Bldg. 00053
Fort Stewart
Liberty GA 31314
Landholding Agency: Army
Property Number: 21200520089
Status: Excess
Comments: 2844 sq. ft., most recent use—admin., off-site use only

Bldg. 00054
Fort Stewart
Liberty GA 31314
Landholding Agency: Army
Property Number: 21200520090
Status: Excess
Comments: 4425 sq. ft., most recent use—admin., off-site use only

Bldg. 01243
Hunter Army Airfield
Savannah GA 31409
Landholding Agency: Army
Property Number: 21200610040
Status: Excess
Comments: 1258 sq. ft., most recent use—ref/ac facility, off-site use only

Bldg. 01244
Hunter Army Airfield
Savannah GA 31409
Landholding Agency: Army
Property Number: 21200610041
Status: Excess
Comments: 4096 sq. ft., presence of asbestos, most recent use—hdqts. facility, off-site use only

Bldg. 01318
Hunter Army Airfield
Savannah GA 31409
Landholding Agency: Army
Property Number: 21200610042
Status: Excess
Comments: 1500 sq. ft., most recent use—storage, off-site use only

Bldg. 00612
Fort Stewart
Liberty GA 31314
Landholding Agency: Army
Property Number: 21200610043
Status: Excess
Comments: 5298 sq. ft., needs rehab, most recent use—health clinic, off-site use only

Bldg. 00614
Fort Stewart
Liberty GA 31314
Landholding Agency: Army
Property Number: 21200610044
Status: Excess
Comments: 10,157 sq. ft., needs rehab, most recent use—brigade hqtrs, off-site use only

Bldg. 00618
Fort Stewart
Liberty GA 31314
Landholding Agency: Army
Property Number: 21200610045
Status: Excess
Comments: 6137 sq. ft., needs rehab, most recent use—brigade hqtrs, off-site use only

Bldg. 00628
Fort Stewart
Liberty GA 31314
Landholding Agency: Army
Property Number: 21200610046

Status: Excess
Comments: 10,050 sq. ft., needs rehab, most recent use—brigade hqtrs, off-site use only

Bldg. 01079
Fort Stewart
Liberty GA 31314
Landholding Agency: Army
Property Number: 21200610047
Status: Excess
Comments: 7680 sq. ft., most recent use—range/target house, off-site use only

Bldg. 07901
Fort Stewart
Liberty GA 31314
Landholding Agency: Army
Property Number: 21200610049
Status: Excess
Comments: 4800 sq. ft., most recent use—range support, off-site use only

Bldg. 08031
Fort Stewart
Liberty GA 31314
Landholding Agency: Army
Property Number: 21200610050
Status: Excess
Comments: 1296 sq. ft., most recent use—range/target house, off-site use only

Bldg. 08081
Fort Stewart
Liberty GA 31314
Landholding Agency: Army
Property Number: 21200610052
Status: Excess
Comments: 1296 sq. ft., most recent use—range/target house, off-site use only

Bldg. 08252
Fort Stewart
Liberty GA 31314
Landholding Agency: Army
Property Number: 21200610053
Status: Excess
Comments: 145 sq. ft., most recent use—control tower, off-site use only

Louisiana

Bldgs. T406, T407, T411
Fort Polk
Ft. Polk LA 71459
Landholding Agency: Army
Property Number: 21200540085
Status: Unutilized
Comments: 6165 sq. ft., most recent use—admin., off-site use only

Maryland

Bldg. 8608
Fort George G. Meade
Ft. Meade MD 20755–5115
Landholding Agency: Army
Property Number: 21200410099
Status: Unutilized
Comments: 2372 sq. ft., concrete block, most recent use—PX exchange, off-site use only

Bldg. 8612
Fort George G. Meade
Ft. Meade MD 20755–5115
Landholding Agency: Army
Property Number: 21200410101
Status: Unutilized
Comments: 2372 sq. ft., concrete block, most recent use—family life ctr., off-site use only

Bldg. 0001A
Federal Support Center
Olney MD 20882
Landholding Agency: Army
Property Number: 21200520114
Status: Unutilized
Comments: 9000 sq. ft., most recent use—storage

Bldg. 0001C
Federal Support Center
Olney MD 20882
Landholding Agency: Army
Property Number: 21200520115
Status: Unutilized
Comments: 2904 sq. ft., most recent use—mess hall

Bldgs. 00032, 00H14, 00H24
Federal Support Center
Olney MD 20882
Landholding Agency: Army
Property Number: 21200520116
Status: Unutilized
Comments: Various sq. ft., most recent use—storage

Bldgs. 00034, 00H016
Federal Support Center
Olney MD 20882
Landholding Agency: Army
Property Number: 21200520117
Status: Unutilized
Comments: 400/39 sq. ft., most recent use—storage

Bldgs. 00H10, 00H12
Federal Support Center
Olney MD 20882
Landholding Agency: Army
Property Number: 21200520118
Status: Unutilized
Comments: 2160/469 sq. ft., most recent use—vehicle maintenance

Michigan

Bldg. 00001
Sheridan Hall USARC
501 Euclid Avenue
Helena MI 59601–2865
Landholding Agency: Army
Property Number: 21200510066
Status: Unutilized
Comments: 19,321 sq. ft., most recent use—reserve center

Missouri

Bldg. 1230
Fort Leonard Wood
Ft. Leonard Wood MO 65743–8944
Landholding Agency: Army
Property Number: 21200340087
Status: Unutilized
GSA Number:
Comments: 9160 sq. ft., most recent use—training, off-site use only

Bldg. 1621
Fort Leonard Wood
Ft. Leonard Wood MO 65743–8944
Landholding Agency: Army
Property Number: 21200340088
Status: Unutilized
GSA Number:
Comments: 2400 sq. ft., most recent use—exchange branch, off-site use only

Bldg. 5760
Fort Leonard Wood
Ft. Leonard Wood MO 65743–8944
Landholding Agency: Army
Property Number: 21200410102
Status: Unutilized
Comments: 2000 sq. ft., most recent use—classroom, off-site use only

Bldg. 5762
Fort Leonard Wood
Ft. Leonard Wood MO 65743–8944
Landholding Agency: Army
Property Number: 21200410103
Status: Unutilized
Comments: 104 sq. ft., off-site use only

Bldg. 5763
Fort Leonard Wood
Ft. Leonard Wood MO 65743–8944
Landholding Agency: Army
Property Number: 21200410104
Status: Unutilized
Comments: 120 sq. ft., most recent use—observation tower, off-site use only

Bldg. 5765
Fort Leonard Wood
Ft. Leonard Wood MO 65743–8944
Landholding Agency: Army
Property Number: 21200410105
Status: Unutilized
Comments: 800 sq. ft., most recent use—range support, off-site use only

Bldg. 5760
Fort Leonard Wood
Ft. Leonard Wood MO 65743–8944
Landholding Agency: Army
Property Number: 21200420059
Status: Unutilized
Comments: 2000 sq. ft., most recent use—classroom, off-site use only

Bldg. 5762
Fort Leonard Wood
Ft. Leonard Wood MO 65743–8944
Landholding Agency: Army
Property Number: 21200420060
Status: Unutilized
Comments: 104 sq. ft., off-site use only

Bldg. 5763
Fort Leonard Wood
Ft. Leonard Wood MO 65743–8944
Landholding Agency: Army
Property Number: 21200420061
Status: Unutilized
Comments: 120 sq. ft., most recent use—obs. tower, off-site use only

Bldg. 5765
Fort Leonard Wood
Ft. Leonard Wood MO 65743–8944
Landholding Agency: Army
Property Number: 21200420062
Status: Unutilized
Comments: 800 sq. ft., most recent use—support bldg., off-site use only

Bldg. 00467
Fort Leonard Wood
Ft. Leonard Wood MO 65743
Landholding Agency: Army
Property Number: 21200530085
Status: Unutilized
Comments: 2790 sq. ft., most recent use—fast food facility, off-site use only

New York

Bldgs. 1511–1518
U.S. Military Academy
Training Area
Highlands NY 10996
Landholding Agency: Army
Property Number: 21200320160
Status: Unutilized
GSA Number:
Comments: 2400 sq. ft. each, needs rehab, most recent use—barracks, off-site use only

Bldgs. 1523–1526

U.S. Military Academy
Training Area
Highlands NY 10996
Landholding Agency: Army
Property Number: 21200320161
Status: Unutilized
GSA Number:
Comments: 2400 sq. ft. each, needs rehab, most recent use—barracks, off-site use only

Bldgs. 1704–1705, 1721–1722
U.S. Military Academy
Training Area
Highlands NY 10996
Landholding Agency: Army
Property Number: 21200320162
Status: Unutilized
GSA Number:
Comments: 2400 sq. ft. each, needs rehab, most recent use—barracks, off-site use only

Bldg. 1723
U.S. Military Academy
Training Area
Highlands NY 10996
Landholding Agency: Army
Property Number: 21200320163
Status: Unutilized
GSA Number:
Comments: 2400 sq. ft., needs rehab, most recent use—day room, off-site use only

Bldgs. 1706–1709
U.S. Military Academy
Training Area
Highlands NY 10996
Landholding Agency: Army
Property Number: 21200320164
Status: Unutilized
GSA Number:
Comments: 2400 sq. ft. each, needs rehab, most recent use—barracks, off-site use only

Bldgs. 1731–1735
U.S. Military Academy
Training Area
Highlands NY 10996
Landholding Agency: Army
Property Number: 21200320165
Status: Unutilized
GSA Number:
Comments: 2400 sq. ft. each, needs rehab, most recent use—barracks, off-site use only

Texas

Bldgs. 4219, 4227
Fort Hood
Ft. Hood TX 76544
Landholding Agency: Army
Property Number: 21200220139
Status: Unutilized
GSA Number:
Comments: 8056, 500 sq. ft., most recent use—admin., off-site use only

Bldgs. 4229, 4230, 4231
Fort Hood
Ft. Hood TX 76544
Landholding Agency: Army
Property Number: 21200220140
Status: Unutilized
GSA Number:
Comments: 9000 sq. ft., most recent use—hq. bldg., off-site use only

Bldgs. 4244, 4246
Fort Hood
Ft. Hood TX 76544
Landholding Agency: Army
Property Number: 21200220141
Status: Unutilized
GSA Number:
Comments: 9000 sq. ft., most recent use—storage, off-site use only

Bldgs. 4260, 4261, 4262
Fort Hood
Ft. Hood TX 76544
Landholding Agency: Army
Property Number: 21200220142
Status: Unutilized
GSA Number:
Comments: 7680 sq. ft., most recent use—storage, off-site use only

Bldg. 04335
Fort Hood
Bell TX 76544
Landholding Agency: Army
Property Number: 21200440090
Status: Excess
Comments: 3378 sq. ft., possible asbestos, most recent use—general, off-site use only

Bldg. 04465
Fort Hood
Bell TX 76544
Landholding Agency: Army
Property Number: 21200440094
Status: Excess
Comments: 5310 sq. ft., possible asbestos, most recent use—general, off-site use only

Bldg. 04468
Fort Hood
Bell TX 76544
Landholding Agency: Army
Property Number: 21200440096
Status: Excess
Comments: 3100 sq. ft., possible asbestos, most recent use—misc., off-site use only

Bldgs. 04475–04476
Fort Hood
Bell TX 76544
Landholding Agency: Army
Property Number: 21200440098
Status: Excess
Comments: 3241 sq. ft., possible asbestos, most recent use—general, off-site use only

Bldg. 04477
Fort Hood
Bell TX 76544
Landholding Agency: Army
Property Number: 21200440099
Status: Excess
Comments: 3100 sq. ft., possible asbestos, most recent use—general, off-site use only

Bldg. 07002
Fort Hood
Bell TX 76544
Landholding Agency: Army
Property Number: 21200440100
Status: Excess
Comments: 2598 sq. ft., possible asbestos, most recent use—fire station, off-site use only

Bldg. 57001
Fort Hood
Bell TX 76544
Landholding Agency: Army
Property Number: 21200440105
Status: Excess
Comments: 53,024 sq. ft., possible asbestos, most recent use—storage, off-site use only

Bldgs. 125, 126
Fort Hood
Bell TX 76544
Landholding Agency: Army
Property Number: 21200620075
Status: Excess
Comments: 2700/7200 sq. ft., presence of asbestos, most recent use—admin., off-site use only

Bldg. 02240
Fort Hood
Bell TX 76544
Landholding Agency: Army
Property Number: 21200620078
Status: Excess
Comments: 487 sq. ft., presence of asbestos, most recent use—pool svc bldg, off-site use only

Bldg. 04164
Fort Hood
Bell TX 76544
Landholding Agency: Army
Property Number: 21200620079
Status: Excess
Comments: 2253 sq. ft., presence of asbestos, most recent use—storage, off-site use only

Bldgs. 04218, 04228
Fort Hood
Bell TX 76544
Landholding Agency: Army
Property Number: 21200620080
Status: Excess
Comments: 4682/9000 sq. ft., presence of asbestos, most recent use—admin, off-site use only

Bldg. 04272
Fort Hood
Bell TX 76544
Landholding Agency: Army
Property Number: 21200620081
Status: Excess
Comments: 7680 sq. ft., presence of asbestos, most recent use—storage, off-site use only

Bldg. 04415
Fort Hood
Bell TX 76544
Landholding Agency: Army
Property Number: 21200620083
Status: Excess
Comments: 1750 sq. ft., presence of asbestos, most recent use—classroom, off-site use only

4 Bldgs
Fort Hood
04419, 04420, 04421, 04424
Bell TX 76544
Landholding Agency: Army
Property Number: 21200620084
Status: Excess
Comments: 5310 sq. ft., presence of asbestos, most recent use—admin., off-site use only

4 Bldgs.
Fort Hood
04425, 04426, 04427, 04429
Bell TX 76544
Landholding Agency: Army
Property Number: 21200620085
Status: Excess
Comments: 5310 sq. ft., presence of asbestos, most recent use—admin., off-site use only

Bldg. 04430
Fort Hood
Bell TX 76544
Landholding Agency: Army
Property Number: 21200620087
Status: Excess
Comments: 3241 sq. ft., presence of asbestos, most recent use—storage, off-site use only

Bldg. 04434

Fort Hood
Bell TX 76544
Landholding Agency: Army
Property Number: 21200620088
Status: Excess
Comments: 5310 sq. ft., presence of asbestos, most recent use—admin., off-site use only

Bldgs. 04470, 04471
Fort Hood
Bell TX 76544
Landholding Agency: Army
Property Number: 21200620090
Status: Excess
Comments: 3241 sq. ft., presence of asbestos, most recent use—admin., off-site use only

Bldg. 04493
Fort Hood
Bell TX 76544
Landholding Agency: Army
Property Number: 21200620091
Status: Excess
Comments: 3108 sq. ft., presence of asbestos, most recent use—housing maint., off-site use only

Bldg. 04494
Fort Hood
Bell TX 76544
Landholding Agency: Army
Property Number: 21200620092
Status: Excess
Comments: 2686 sq. ft., presence of asbestos, most recent use—repair bays, off-site use only

Bldg. 04632
Fort Hood
Bell TX 76544
Landholding Agency: Army
Property Number: 21200620093
Status: Excess
Comments: 4000 sq. ft., presence of asbestos, most recent use—storage, off-site use only

Bldg. 04640
Fort Hood
Bell TX 76544
Landholding Agency: Army
Property Number: 21200620094
Status: Excess
Comments: 1600 sq. ft., presence of asbestos, most recent use—storage, off-site use only

Bldg. 04645
Fort Hood
Bell TX 76544
Landholding Agency: Army
Property Number: 21200620095
Status: Excess
Comments: 5300 sq. ft., presence of asbestos, most recent use—storage, off-site use only

Bldg. 04906
Fort Hood
Bell TX 76544
Landholding Agency: Army
Property Number: 21200620096
Status: Excess
Comments: 1040 sq. ft., presence of asbestos, most recent use—storage, off-site use only

Bldg. 20121
Fort Hood
Bell TX 76544
Landholding Agency: Army
Property Number: 21200620097
Status: Excess
Comments: 5200 sq. ft., presence of asbestos, most recent use—rec center, off-site use only

Bldg. 91052
Fort Hood
Bell TX 76544
Landholding Agency: Army
Property Number: 21200620101
Status: Excess
Comments: 224 sq. ft., presence of asbestos, most recent use—lab/test, off-site use only

Bldg. 1345
Fort Hood
Bell TX 76544
Landholding Agency: Army
Property Number: 21200740070
Status: Excess
Comments: 240 sq. ft., presence of asbestos, most recent use-oil storage, off-site use only

Bldgs. 1348, 1941
Fort Hood
Bell TX 76544
Landholding Agency: Army
Property Number: 21200740071
Status: Excess
Comments: 640/900 sq. ft., presence of asbestos, most recent use—admin., off-site use only

Bldg. 1919
Fort Hood
Bell TX 76544
Landholding Agency: Army
Property Number: 21200740072
Status: Excess
Comments: 80 sq. ft., presence of asbestos, most recent use—pump station, off-site use only

Bldg. 1943
Fort Hood
Bell TX 76544
Landholding Agency: Army
Property Number: 21200740073
Status: Excess
Comments: 780 sq. ft., presence of asbestos, most recent use—rod & gun club, off-site use only

Bldg. 1946
Fort Hood
Bell TX 76544
Landholding Agency: Army
Property Number: 21200740074
Status: Excess
Comments: 2880 sq. ft., presence of asbestos, most recent us—storage, off-site use only

Bldg. 4207
Fort Hood
Bell TX 76544
Landholding Agency: Army
Property Number: 21200740076
Status: Excess
Comments: 2240 sq. ft., presence of asbestos, most recent use—maint. shop, off-site use only

Bldg. 4208
Fort Hood
Bell TX 76544
Landholding Agency: Army
Property Number: 21200740077
Status: Excess
Comments: 9464 sq. ft., presence of asbestos, most recent use—warehouse, off-site use only

Bldgs. 4210, 4211, 4216
Fort Hood
Bell TX 76544
Landholding Agency: Army
Property Number: 21200740078
Status: Excess
Comments: 4625/5280 sq. ft., presence of asbestos, most recent use—maint., off-site use only

Bldg. 4219A
Fort Hood
Bell TX 76544
Landholding Agency: Army
Property Number: 21200740079
Status: Excess
Comments: 446 sq. ft., presence of asbestos, most recent use—storage, off-site use only

Bldg. 04252
Fort Hood
Bell TX 76544
Landholding Agency: Army
Property Number: 21200740081
Status: Excess
Comments: 9000 sq. ft., presence of asbestos, most recent use—storage, off-site use only

Bldg. 4255
Fort Hood
Bell TX 76544
Landholding Agency: Army
Property Number: 21200740082
Status: Excess
Comments: 448 sq ft., presence of asbestos, off-site use only

Bldg. 04480
Fort Hood
Bell TX 76544
Landholding Agency: Army
Property Number: 21200740083
Status: Excess
Comments: 2700 sq. ft., presence of asbestos, most recent use—storage, off-site use only

Bldg. 04485
Fort Hood
Bell TX 76544
Landholding Agency: Army
Property Number: 21200740084
Status: Excess
Comments: 640 sq. ft., presence of asbestos, most recent use—maint., off-site use only

Bldg. 04489
Fort Hood
Ft. Hood TX 76544
Landholding Agency: Army
Property Number: 21200740086
Status: Excess
Comments: 880 sq. ft., presence of asbestos, most recent use—admin., off-site use only

Bldgs. 4491, 4492
Fort Hood
Bell TX 76544
Landholding Agency: Army
Property Number: 21200740087
Status: Excess
Comments: 3108/1040 sq. ft., presence of asbestos, most recent use—maint., off-site use only

Bldgs. 04902, 04905
Fort Hood
Bell TX 76544
Landholding Agency: Army
Property Number: 21200740088
Status: Excess
Comments: 2575/6136 sq. ft., presence of asbestos, most recent use—vet bldg., off-site use only

Bldgs. 04914, 04915, 04916
Fort Hood
Bell TX 76544

Landholding Agency: Army
Property Number: 21200740089
Status: Excess
Comments: 371 sq. ft., presence of asbestos, most recent use—animal shelter, off-site use only

Bldg. 20102
Fort Hood
Bell TX 76544
Landholding Agency: Army
Property Number: 21200740091
Status: Excess
Comments: 252 sq. ft., presence of asbestos, most recent use—recreation services, off-site use only

Bldg. 20118
Fort Hood
Bell TX 76544
Landholding Agency: Army
Property Number: 21200740092
Status: Excess
Comments: 320 sq. ft., presence of asbestos, most recent use—maint.,off-site use only

Bldg. 29027
Fort Hood
Bell TX 76544
Landholding Agency: Army
Property Number: 21200740093
Status: Excess
Comments: 2240 sq. ft., presence of asbestos, most recent use—hdqts bldg, off-site use only

Bldg. 56017
Fort Hood
Bell TX 76544
Landholding Agency: Army
Property Number: 21200740094
Status: Excess
Comments: 2592 sq. ft., presence of asbestos, most recent use—admin., off-site use only

Bldg. 56202
Fort Hood
Bell TX 76544
Landholding Agency: Army
Property Number: 21200740095
Status: Excess
Comments: 1152 sq. ft., presence of asbestos, most recent use—training, off-site use only

Bldg. 56224
Fort Hood
Bell TX 76544
Landholding Agency: Army
Property Number: 21200740096
Status: Excess
Comments: 80 sq. ft., presence of asbestos, off-site use only

Bldg. 56311
Fort Hood
Bell TX 76544
Landholding Agency: Army
Property Number: 21200740098
Status: Excess
Comments: 480 sq. ft., presence of asbestos, most recent use—laundry, off-site use only

Bldg. 56329
Fort Hood
Bell TX 76544
Landholding Agency: Army
Property Number: 21200740100
Status: Excess
Comments: 2080 sq. ft., presence of asbestos, most recent use—officer's qtrs., off-site use only

Bldg. 92043
Fort Hood
Bell TX 76544
Landholding Agency: Army
Property Number: 21200740102
Status: Excess
Comments: 450 sq. ft., presence of asbestos, most recent use—storage, off-site use only

Bldg. 92072
Fort Hood
Bell TX 76544
Landholding Agency: Army
Property Number: 21200740103
Status: Excess
Comments: 2400 sq. ft., presence of asbestos, most recent use—admin., off-site use only

Bldg. 92083
Fort Hood
Bell TX 76544
Landholding Agency: Army
Property Number: 21200740104
Status: Excess
Comments: 240 sq. ft., presence of asbestos, most recent use—utility bldg., off-site use only

Bldgs. 04213, 04227
Fort Hood
Bell TX 76544
Landholding Agency: Army
Property Number: 21200740189
Status: Excess
Comments: 14183/10500 sq. ft., presence of asbestos, most recent use—admin., off-site use only

Bldg.4404
Fort Hood
Bell TX 76544
Landholding Agency: Army
Property Number: 21200740190
Status: Excess
Comments: 8043 sq ft., presence of asbestos, most recent use—training bldg., off-site use only

Bldg. 56607
Fort Hood
Bell TX 76544
Landholding Agency: Army
Property Number: 21200740191
Status: Excess
Comments: 3552 sq. ft., presence of asbestos, most recent use—chapel, off-site use only

Bldg. 91041
Fort Hood
Bell TX 76544
Landholding Agency: Army
Property Number: 21200740192
Status: Excess
Comments: 1920 sq. ft., presence of asbestos, most recent use—shed, off-site use only

5 Bldgs.
Fort Hood 93010, 93011, 93012, 93014
Bell TX 76544
Landholding Agency: Army
Property Number: 21200740193
Status: Excess
Comments: 210/800 sq. ft., presence of asbestos, most recent use—private club, off-site use only

Bldg. 94031
Fort Hood
Bell TX 76544
Landholding Army
Property Number: 21200740194
Status: Excess
Comments: 1008 sq. ft., presence of asbestos, most recent use—training, off-site use only

Virginia

Bldg. T2827
Fort Pickett
Blackstone VA 23824
Landholding Agency: Army
Property Number: 21200320172
Status: Unutilized
GSA Number:
Comments: 3550 sq. ft., presence of asbestos, most recent use—dining, off-site use only

Bldg. T2841
Fort Pickett
Blackstone VA 23824
Landholding Agency: Army
Property Number: 21200320173
Status: Unutilized
GSA Number:
Comments: 2950 sq. ft., presence of asbestos, most recent use—dining, off-site use only

Bldg. 01014
Fort Story
Ft. Story VA 23459
Landholding Agency: Army
Property Number: 21200720067
Status: Unutilized
Comments: 1014 sq. ft., most recent use—admin., off-site use only

Bldg. 01063
Fort Story
Ft. Story VA 23459
Landholding Agency: Army
Property Number: 21200720072
Status: Unutilized
Comments: 2000 sq. ft., most recent use—storage, off-site use only

Bldg. 00215
Fort Eustis
Ft. Eustis VA 23604
Landholding Agency: Army
Property Number: 21200720073
Status: Unutilized
Comments: 2540 sq. ft., most recent use—admin., off-site use only

4 Bldgs.
Fort Eustis 01514, 01523, 01528, 01529
Ft. Eustis VA 23604
Landholding Agency: Army
Property Number: 21200720074
Status: Unutilized
Comments: 4720 sq. ft., most recent use—admin., off-site use only

4 Bldgs.
Fort Eustis 01534, 01542, 01549, 01557
Ft. Eustis VA 23604
Landholding Agency: Army
Property Number: 21200720075
Status: Unutilized
Comments: 4720 sq. ft., most recent use—admin., off-site use only

Bldgs. 01707, 01719
Fort Eustis
Ft. Eustis VA 23604
Landholding Agency: Army
Property Number: 21200720077
Status: Unutilized
Comments: 4720 sq. ft., most recent use—admin., off-site use only

Bldg. 01720
Fort Eustis
Ft. Eustis VA 23604
Landholding Agency: Army
Property Number: 21200720078
Status: Unutilized
Comments: 1984 sq. ft., most recent use—admin., off-site use only

Bldgs. 01721, 01725
Fort Eustis
Ft. Eustis VA 23604
Landholding Agency: Army
Property Number: 21200720079
Status: Unutilized
Comments: 4720 sq. ft., most recent use—admin., off-site use only

Bldgs. 01726, 01735, 01736
Fort Eustis
Ft. Eustis VA 23604
Landholding Agency: Army
Property Number: 21200720080
Status: Unutilized
Comments: 1144 sq. ft., most recent use—admin., off-site use only

Bldgs. 01734, 01745, 01747
Fort Eustis
Ft. Eustis VA 23604
Landholding Agency: Army
Property Number: 21200720081
Status: Unutilized
Comments: 4720 sq. ft., most recent use—admin., off-site use only

Bldg. 01741
Fort Eustis
Ft. Eustis VA 23604
Landholding Agency: Army
Property Number: 21200720082
Status: Unutilized
Comments: 1984 sq. ft., most recent use—admin., off-site use only

Bldg. 02720
Fort Eustis
Ft. Eustis VA 23604
Landholding Agency: Army
Property Number: 21200720083
Status: Unutilized
Comments: 400 sq. ft., most recent use—storage, off-site use only

Washington

Bldg. 05904
Fort Lewis
Ft. Lewis WA 98433–9500
Landholding Agency: Army
Property Number: 21200240092
Status: Excess
GSA Number:
Comments: 82 sq. ft., most recent use—guard shack, off-site use only

Unsuitable Properties

Building

Alabama

Bldg. 7862
Redstone Arsenal
Redstone Arsenal AL 35898–5000
Landholding Agency: Army
Property Number: 21200040010
Status: Unutilized
GSA Number:
Reasons: Extensive deterioration Secured Area

Bldg. 8721
Redstone Arsenal
Redstone Arsenal AL 35898–5000
Landholding Agency: Army
Property Number: 21200040011
Status: Unutilized
GSA Number:
Reasons: Extensive deterioration Secured Area

Bldg. 8987
Redstone Arsenal
Redstone Arsenal AL 35898–5000
Landholding Agency: Army
Property Number: 21200040012
Status: Unutilized
GSA Number:
Reasons: Secured Area Extensive deterioration

Bldg. 1413A
Redstone Arsenal
Redstone Arsenal AL 35898
Landholding Agency: Army
Property Number: 21200240010
Status: Unutilized
GSA Number:
Reasons: Extensive deterioration Secured Area

8 Bldgs.
Redstone Arsenal1417A thru 1424A
Redstone Arsenal AL 35898
Landholding Agency: Army
Property Number: 21200240011
Status: Unutilized
GSA Number:
Reasons: Extensive deterioration Secured Area

5 Bldgs.
Redstone Arsenal1426A thru 1430A
Redstone Arsenal AL 35898
Landholding Agency: Army
Property Number: 21200240012
Status: Unutilized
GSA Number:
Reasons: Secured Area Extensive deterioration

5 Bldgs.
Redstone Arsenal1433A thru 1437A
Redstone Arsenal AL 35898
Landholding Agency: Army
Property Number: 21200240013
Status: Unutilized
GSA Number:
Reasons: Secured Area Extensive deterioration

Bldg. 03140
Redstone Arsenal
Redstone Arsenal AL 35898
Landholding Agency: Army
Property Number: 21200240014
Status: Unutilized
GSA Number:
Reasons: Secured Area Extensive deterioration

Bldg. 7339A
Redstone Arsenal
Redstone Arsenal AL 35898–5000
Landholding Agency: Army
Property Number: 21200340011
Status: Unutilized
GSA Number:
Reasons: Secured Area Extensive deterioration

Bldg. 30113
Fort Rucker
Ft. Rucker AL 36362
Landholding Agency: Army
Property Number: 21200540001
Status: Excess
Reasons: Secured Area

Bldgs. 26201, 26204
Fort Rucker
Dale AL 36362
Landholding Agency: Army
Property Number: 21200640004
Status: Unutilized
Reasons: Within airport runway clear zone Extensive deterioration

Bldgs. 04122, 04184
Redstone Arsenal
Madison AL 35898
Landholding Agency: Army
Property Number: 21200920011
Status: Unutilized
Reasons: Secured Area

Bldg. 00046
Anniston Army Depot
Calhoun AL 36201
Landholding Agency: Army
Property Number: 21201010002
Status: Unutilized
Reasons: Extensive deterioration

Bldgs. 412, 1442, 1444, 4745
Fort Rucker
Ft. Rucker AL 36362
Landholding Agency: Army
Property Number: 21201010003
Status: Unutilized
Reasons: Secured Area

Bldgs. 5004T, 5005T, 5006T
Fort Rucker
Ft. Rucker AL 36362
Landholding Agency: Army
Property Number: 21201010004
Status: Unutilized
Reasons: Secured Area

8 Bldgs.
Fort Rucker
Ft. Rucker AL 36362
Landholding Agency: Army
Property Number: 21201010005
Status: Unutilized
Directions: 26101, 26104, 27202, 27203, 27402, 27403, 27602, 27603
Reasons: Secured Area

Bldg. 6201
Redstone Arsenal
Madison AL 35898
Landholding Agency: Army
Property Number: 21201030002
Status: Unutilized
Reasons: Extensive deterioration Secured Area

Bldgs. 30109, 30112, 30120
Cairns AAF
Daleville AL 36322
Landholding Agency: Army
Property Number: 21201030005
Status: Unutilized
Reasons: Within airport runway clear, zone Within 2000 ft. of flammable or explosive material Secured Area

5 Bldgs.
Milan Training Center325 Arsenal Lane
Milan AL 38358
Landholding Agency: Army
Property Number: 21201110005
Status: Excess
Directions: 00I18, 00I19, W001A, W0062, W0063
Reasons: Extensive deterioration Within 2000 ft. of flammable or explosive material Secured Area

Anniston Army Depot (2 Bldgs.)
7 Frankford Ave
Anniston AL 36201–4199
Landholding Agency: Army
Property Number: 21201110036
Status: Unutilized
Directions: Bldgs: 00615 & 00616

Reasons: Extensive deterioration

4 Bldgs.
Ft. Rucker
Dalesville AL
Landholding Agency: Army
Property Number: 21201120053
Status: Unutilized
Directions: 03904, 03905, 30124, 30128
Reasons: Within airport runway clear zone

Bldg. 03520
3520 Cajun Drive
Redstone Arsenal AL 35898
Landholding Agency: Army
Property Number: 21201120092
Status: Unutilized
Reasons: Other—Indoor Firing range Secured Area Extensive deterioration

Bldg. 03548
3548 Cajun Drive
Redstone Arsenal AL 35898
Landholding Agency: Army
Property Number: 21201120093
Status: Unutilized
Reasons: Secured Area Extensive deterioration

Bldg. 04382
4382 Digney Road
Redstone Arsenal AL 35898
Landholding Agency: Army
Property Number: 21201120095
Status: Unutilized
Reasons: Extensive deterioration Secured Area

Bldg. 7625A, Redstone Arsenal7625A Pigeon Circle
Redstone Arsenal AL 35898
Landholding Agency: Army
Property Number: 21201120102
Status: Unutilized
Reasons: Extensive deterioration Secured Area

Bldg. 07670, Redstone Arsenal
7670 East Line Road
Redstone Arsenal AL 35898
Landholding Agency: Army
Property Number: 21201120104
Status: Unutilized
Reasons: Secured Area Extensive deterioration

Bldg. 07692
7692 Mike Square
Redstone Arsenal AL 35898
Landholding Agency: Army
Property Number: 21201120105
Status: Unutilized
Reasons: Secured Area Extensive deterioration

Bldg 7358A
Sandpiper Road
Redstone Arsenal AL 35898
Landholding Agency: Army
Property Number: 21201140047
Status: Unutilized
Reasons: Within 2000 ft. of flammable or explosive material Secured Area

2 Bldgs.
Redstone Arsenal
Redstone Arsenal AL 35898
Landholding Agency: Army
Property Number: 21201140051
Status: Unutilized
Directions: 7850 and 8002
Comments: no potential to meet criteria-not economically feasible
Reasons: Extensive deterioration

19 Bldgs.
Redstone Arsenal
Redstone Arsenal AL 35898
Landholding Agency: Army
Property Number: 21201140052
Status: Unutilized
Directions: 3204, 3206, 3207, 3208, 3216, 3218, 3231, 3467, 3478, 3479, 3483, 5447, 5448, 5457, 7368B, 7373, 7374, 7384, 7600
Comments: no potential to meet criteria-not economically feasible
Reasons: Extensive deterioration

Bldg. C1302
null
Fort McClellan AL 36205
Landholding Agency: Army
Property Number: 21201140073
Status: Unutilized
Reasons: Secured Area Extensive deterioration

Bldg. 28150
RT 52, Highfalls Stagefield
Fort Rucker AL 36344
Landholding Agency: Army
Property Number: 21201140074
Status: Unutilized
Reasons: Secured Area Extensive deterioration Isolated area

C–2202
Ft. McClellan
Ft. McClellan AL 36205
Landholding Agency: Army
Property Number: 21201210042
Status: Unutilized
Comments: nat'l security concerns; no public access and no alternative method to gain access
Reasons: Secured Area

6 Buildings
Anniston Army Depot
Anniston AL 36201
Landholding Agency: Army
Property Number: 21201230003
Status: Unutilized
Directions: 3, 3A, 640, 674, TK053, TK054
Comments: closed installation; public access denied & no alternative method to gain access w/out comprising nat'l security
Reasons: Secured Area

Alaska

Bldgs. 55294, 55298, 55805
Fort Richardson
Ft. Richardson AK 99505
Landholding Agency: Army
Property Number: 21200340006
Status: Unutilized
GSA Number:
Reasons: Extensive deterioration

Bldg. 02A60
Noatak Armory
Kotzebue AK
Landholding Agency: Army
Property Number: 21200740105
Status: Excess
Reasons: Within 2000 ft. of flammable or explosive material

Bldg. RLNCL
Fort Richardson
Ft. Richardson AK
Landholding Agency: Army
Property Number: 21200820058
Status: Unutilized
Reasons: Extensive deterioration

Bldg. 00604
Ft. Richardson
Ft. Richardson AK 99505
Landholding Agency: Army
Property Number: 21200830006
Status: Excess
Reasons: Secured Area

Bldg. 00655
Fort Greely
Fort Greely AK 96740
Landholding Agency: Army
Property Number: 21200930004
Status: Unutilized
Reasons: Secured Area Extensive deterioration Within 2000 ft. of flammable or explosive material

Bldg. XTENA
Fort Greely
Fort Greely AK 99731
Landholding Agency: Army
Property Number: 21200940021
Status: Unutilized
Reasons: Within 2000 ft. of flammable or explosive material Secured Area Extensive deterioration

Bldgs. 789–790
Fort Richardson
Anchorage AK 99505
Landholding Agency: Army
Property Number: 21201030001
Status: Unutilized
Reasons: Secured Area

4245
599th St.
Ft. Wainwright AK 99703
Landholding Agency: Army
Property Number: 21201230053
Status: Unutilized
Comments: public access denied & no alternative method to gain access w/out comprising nat'l security
Reasons: Secured Area

Bldg. 3493
Gate Rd. S
Ft. Wainwright AK 99703
Landholding Agency: Army
Property Number: 21201230058
Status: Unutilized
Comments: public access denied; authorized military ID only; no alternative method for public to gain access w/out comprising nat'l security
Reasons: Secured Area

Arizona

Bldg. 004 (4118)
Navajo Depot Activity
Bellemont AZ 86015
Landholding Agency: Army
Property Number: 21199014560
Status: Underutilized
Directions: 12 miles west of Flagstaff, Arizona on I–40
Comments:
Reasons: Secured Area

Bldg. 6
Navajo Depot Activity
Bellemont AZ 86015
Landholding Agency: Army
Property Number: 21199014561
Status: Underutilized
Directions: 12 miles west of Flagstaff, Arizona on I–40
Comments:
Reasons: Secured Area

Bldg. 8
Navajo Depot Activity
Bellemont AZ 86015
Landholding Agency: Army
Property Number: 21199014562
Status: Underutilized
Directions: 12 miles west of Flagstaff, Arizona on I–40
Comments:
Reasons: Secured Area

Bldg. 14
Navajo Depot Activity
Bellemont AZ 86015
Landholding Agency: Army
Property Number: 21199014568
Status: Underutilized
Directions: 12 miles west of Flagstaff, Arizona on I–40
Comments:
Reasons: Secured Area

Bldg. 31 (45)
Navajo Depot Activity
Bellemont AZ 86015
Landholding Agency: Army
Property Number: 21199014569
Status: Underutilized
Directions: 12 miles west of Flagstaff, Arizona on I–40
Comments:
Reasons: Secured Area

Bldg. 33
Navajo Depot Activity
Bellemont AZ 86015
Landholding Agency: Army
Property Number: 21199014570
Status: Underutilized
Directions: 12 miles west of Flagstaff, Arizona on I–40
Comments:
Reasons: Secured Area

Bldg. 211
Navajo Depot Activity
Bellemont AZ 86015
Landholding Agency: Army
Property Number: 21199014582
Status: Underutilized
Directions: 12 miles west of Flagstaff, Arizona on I–40
Comments:
Reasons: Secured Area

Bldg. 214
Navajo Depot Activity
Bellemont AZ 86015
Landholding Agency: Army
Property Number: 21199014583
Status: Underutilized
Directions: 12 miles west of Flagstaff, Arizona on I–40
Comments:
Reasons: Secured Area

Bldg. 216
Navajo Depot Activity
Bellemont AZ 86015
Landholding Agency: Army
Property Number: 21199014584
Status: Underutilized
Directions: 12 miles west of Flagstaff, Arizona on I–40
Comments:
Reasons: Secured Area

Bldg. 218
Navajo Depot Activity
Bellemont AZ 86015
Landholding Agency: Army
Property Number: 21199014585
Status: Underutilized
Directions: 12 miles west of Flagstaff, Arizona on I–40
Comments:
Reasons: Secured Area

Bldg. 239
Navajo Depot Activity
Bellemont AZ 86015
Landholding Agency: Army
Property Number: 21199014587
Status: Underutilized
Directions: 12 miles west of Flagstaff, Arizona on I–40
Comments:
Reasons: Secured Area

Bldg. 240
Navajo Depot Activity
Bellemont AZ 86015
Landholding Agency: Army
Property Number: 21199014588
Status: Underutilized
Directions: 12 miles west of Flagstaff, Arizona on I–40
Comments:
Reasons: Secured Area

Bldg. 241
Navajo Depot Activity
Bellemont AZ 86015
Landholding Agency: Army
Property Number: 21199014589
Status: Underutilized
Directions: 12 miles west of Flagstaff, Arizona on I–40
Comments:
Reasons: Secured Area

Bldg. 304
Navajo Depot Activity
Bellemont AZ 86015
Landholding Agency: Army
Property Number: 21199014590
Status: Underutilized
Directions: 12 miles west of Flagstaff, Arizona on I–40
Comments:
Reasons: Secured Area

Bldg. 351
Navajo Depot Activity
Bellemont AZ 86015
Landholding Agency: Army
Property Number: 21199014591
Status: Underutilized
Directions: 12 miles west of Flagstaff, Arizona on I–40
Comments:
Reasons: Secured Area

G101–242
Navajo Depot Activity
Bellemont AZ 86015
Landholding Agency: Army
Property Number: 21199014592
Status: Underutilized
Directions: 12 miles west of Flagstaff, Arizona on I–40. (91 Earth covered igloos)
Comments:
Reasons: Secured Area

H101–220
Navajo Depot Activity
Bellemont AZ 86015
Landholding Agency: Army
Property Number: 21199014593
Status: Underutilized
Directions: 12 miles west of Flagstaff, Arizona on I–40. (80 Earth covered igloos)
Comments:
Reasons: Secured Area

C101–518
Navajo Depot Activity
Bellemont AZ 86015
Landholding Agency: Army
Property Number: 21199014595
Status: Underutilized
Directions: 12 miles west of Flagstaff, Arizona on I–40. (100 Earth covered igloos)
Comments:
Reasons: Secured Area

B101–214
Navajo Depot Activity
Bellemont AZ 86015
Landholding Agency: Army
Property Number: 21199014596
Status: Underutilized
Directions: 12 miles west of Flagstaff, Arizona on I–40. (100 Earth covered igloos)
Comments:
Reasons: Secured Area

A101–434
Navajo Depot Activity
Bellemont AZ 86015
Landholding Agency: Army
Property Number: 21199014597
Status: Underutilized
Directions: 12 miles west of Flagstaff, Arizona on I–40. (90 Earth covered igloos)
Comments:
Reasons: Secured Area

B386–387
Navajo Depot Activity
Bellemont AZ 86015
Landholding Agency: Army
Property Number: 21199014598
Status: Underutilized
Directions: 12 miles west of Flagstaff, Arizona on I–40. (2 Earth covered igloos)
Comments:
Reasons: Secured Area

E101–316
Navajo Depot Activity
Bellemont AZ 86015
Landholding Agency: Army
Property Number: 21199014599
Status: Underutilized
Directions: 12 miles west of Flagstaff, Arizona on I–40. (90 Earth covered igloos)
Comments:
Reasons: Secured Area

D101–433
Navajo Depot Activity
Bellemont AZ 86015
Landholding Agency: Army
Property Number: 21199014600
Status: Underutilized
Directions: 12 miles west of Flagstaff, Arizona on I–40. (100 Earth covered igloos)
Comments:
Reasons: Secured Area

F101–324
Navajo Depot Activity
Bellemont AZ 86015
Landholding Agency: Army
Property Number: 21199014601
Status: Underutilized
Directions: 12 miles west of Flagstaff, Arizona on I–40. (100 Earth covered igloos)
Comments:
Reasons: Secured Area

Bldg. 308
Navajo Depot Activity
Bellemont AZ 86015–5000
Landholding Agency: Army
Property Number: 21199030273

Status: Unutilized
Directions: 12 miles west of Flagstaff on I–40
Comments:
Reasons: Secured Area

Bldg. 316–Navajo Depot Activity
12 Miles West of Flagstaff on I–40
Bellemont AZ 86015–5000
Landholding Agency: Army
Property Number: 21199120177
Status: Unutilized
Directions:
Comments:
Reasons: Secured Area

Bldg. 318–Navajo Depot Activity
12 Miles West of Flagstaff on I–40
Bellemont AZ 86015–5000
Landholding Agency: Army
Property Number: 21199120178
Status: Unutilized
Directions:
Comments:
Reasons: Secured Area

Bldg. 350–Navajo Depot Activity
12 Miles West of Flagstaff on I–40
Bellemont AZ 86015–5000
Landholding Agency: Army
Property Number: 21199120181
Status: Unutilized
Directions:
Comments:
Reasons: Secured Area

Bldg. S0220
Camp Navajo
Bellemont AZ 86015
Landholding Agency: Army
Property Number: 21200140006
Status: Unutilized
GSA Number:
Reasons: Secured Area Extensive deterioration Within 2000 ft. of flammable or explosive material

Bldg. 00310
Camp Navajo
Bellemont AZ 86015
Landholding Agency: Army
Property Number: 21200140008
Status: Unutilized
GSA Number:
Reasons: Within 2000 ft. of flammable or explosive material Secured Area Extensive deterioration

Bldg. S0327
Camp Navajo
Bellemont AZ 86015
Landholding Agency: Army
Property Number: 21200140010
Status: Unutilized
GSA Number:
Reasons: Secured Area Extensive deterioration

Bldgs. M5218, M5219, M5222
Pap ago Park Military Rsv
Phoenix AZ 85008
Landholding Agency: Army
Property Number: 21200740001
Status: Unutilized
Reasons: Extensive deterioration Secured Area Within airport runway clear zone

4 Bldgs.
Papago Park Military Rsv
M5234, M5238, M5242, M5247
Phoenix AZ 85008
Landholding Agency: Army
Property Number: 21200740002
Status: Unutilized
Reasons: Within airport runway clear zone Secured Area Extensive deterioration

Bldg. 00002
Camp Navajo
Bellemont AZ 86015
Landholding Agency: Army
Property Number: 21200740109
Status: Unutilized
Reasons: Secured Area

Bldgs. 00203, 00216, 00218
Camp Navajo
Bellemont AZ 86015
Landholding Agency: Army
Property Number: 21200740110
Status: Unutilized
Reasons: Extensive deterioration Secured Area

Bldgs. 00244, 00252, 00253
Camp Navajo
Bellemont AZ
Landholding Agency: Army
Property Number: 21200740111
Status: Unutilized
Reasons: Extensive deterioration Secured Area

7 Bldgs.
Camp Navajo
Bellemont AZ 86015
Landholding Agency: Army
Property Number: 21200740112
Status: Unutilized
Directions: 00302, 00303, 00304, 00311, S0312, S0313, S0319
Reasons: Secured Area Extensive deterioration

4 Bldgs.
Camp Navajo
Bellemont AZ 86015
Landholding Agency: Army
Property Number: 21200740113
Status: Unutilized
Directions: S0320, 00323, S0324, 00329
Reasons: Secured Area

7 Bldgs.
Camp Navajo
Bellemont AZ 86015
Landholding Agency: Army
Property Number: 21200740114
Status: Unutilized
Directions: 00330, 00331, 00332, 00335, 00336, 00338, S0340
Reasons: Secured Area

Bldgs. 30025, 43003
Fort Huachuca
Cochise AZ 85613
Landholding Agency: Army
Property Number: 21200920030
Status: Excess
Reasons: Extensive deterioration

4 Bldgs.
Fort Huachuca
Cochise AZ 85613
Landholding Agency: Army
Property Number: 21201040002
Status: Excess
Directions: 22009, 22010, 22011, 22012
Reasons: Within 2000 ft. of flammable or explosive material

Bldgs. 30116 and 30117
null
Ft. Huachuca AZ 85613
Landholding Agency: Army
Property Number: 21201110047
Status: Excess
Reasons: Extensive deterioration

Arkansas

Bldg. 1672
Fort Chaffee
Ft. Chaffee AR 72905–5000
Landholding Agency: Army
Property Number: 21199640466
Status: Unutilized
Directions:
Comments:
Reasons: Extensive deterioration

Bldg. 1682
Fort Chaffee
Ft. Chaffee AR 72905–5000
Landholding Agency: Army
Property Number: 21199640467
Status: Unutilized
Directions:
Comments:
Reasons: Extensive deterioration

Bldg. 1756
Fort Chaffee
Ft. Chaffee AR 72905–5000
Landholding Agency: Army
Property Number: 21199640468
Status: Unutilized
Directions:
Comments:
Reasons: Extensive deterioration

Bldg. 1786
Fort Chaffee
Ft. Chaffee AR 72905–5000
Landholding Agency: Army
Property Number: 21199640470
Status: Unutilized
Directions:
Comments:
Reasons: Extensive deterioration

Bldg. 2327
Fort Chaffee
Ft. Chaffee AR 72905–5000
Landholding Agency: Army
Property Number: 21199640475
Status: Unutilized
Directions:
Comments:
Reasons: Extensive deterioration

Bldg. 2425
Fort Chaffee
Ft. Chaffee AR 72905–5000
Landholding Agency: Army
Property Number: 21199640476
Status: Unutilized
Directions:
Comments:
Reasons: Extensive deterioration

11 Bldgs.
Ft. Chaffee Maneuver Training Center
Ft. Chaffee AR 72905–1370
Landholding Agency: Army
Property Number: 21200110001
Status: Unutilized
GSA Number:
Directions: 1300, 1304, 1307, 1308, 1311, 1363, 1431, 1434, 1534, 1546, Demo 2
Reasons: Extensive deterioration

17 Bldgs.
Ft. Chaffee Maneuver Training Center
Ft. Chaffee AR 72905–1370
Landholding Agency: Army
Property Number: 21200110002
Status: Unutilized

GSA Number:
Directions: 1301, 1302, 1303, 1305, 1306, 1309, 1310, 1360, 1505, 1529, 1537, 1543, 1577, 1581, 1700, 1711, Demo 1
Reasons: Extensive deterioration

Bldg. 1326
Ft. Chaffee Maneuver Training Center
Ft. Chaffee AR 72905–1370
Landholding Agency: Army
Property Number: 21200110003
Status: Unutilized
GSA Number:
Reasons: Extensive deterioration

7 Bldgs.
Ft. Chaffee Maneuver Training Center
Ft. Chaffee AR 72905–1370
Landholding Agency: Army
Property Number: 21200110005
Status: Unutilized
GSA Number:
Directions: 1449, 1528, 1591, 1592, 1593, 1596, 1735
Reasons: Extensive deterioration

4 Bldgs.
Ft. Chaffee Maneuver Training Center
Ft. Chaffee AR 72905–1370
Landholding Agency: Army
Property Number: 21200110006
Status: Unutilized
GSA Number:
Directions: 1571, 1703, 1758, 1760
Reasons: Extensive deterioration

Bldgs. 1692, 1693
Ft. Chaffee Maneuver Training Center
Ft. Chaffee AR 72905–1370
Landholding Agency: Army
Property Number: 21200110007
Status: Unutilized
GSA Number:
Reasons: Extensive deterioration

Bldgs. 1707, Demo 3
Ft. Chaffee Maneuver Training Center
Ft. Chaffee AR 72905–1370
Landholding Agency: Army
Property Number: 21200110008
Status: Unutilized
GSA Number:
Reasons: Extensive deterioration

7 Bldgs.
Ft. Chaffee Maneuver Training Center
Ft. Chaffee AR 72905–1370
Landholding Agency: Army
Property Number: 21200110009
Status: Unutilized
GSA Number:
Directions: 1749–1754, 1551
Reasons: Extensive deterioration

Bldgs. 2040, 2041
Ft. Chaffee Maneuver Training Center
Ft. Chaffee AR 72905–1370
Landholding Agency: Army
Property Number: 21200110010
Status: Unutilized
GSA Number:
Reasons: Extensive deterioration

Bldg. 2208
Ft. Chaffee Maneuver Training Center
Ft. Chaffee AR 72905–1370
Landholding Agency: Army
Property Number: 21200110012
Status: Unutilized
GSA Number:
Reasons: Extensive deterioration

Bldg. 2421
Ft. Chaffee Maneuver Training Center
Ft. Chaffee AR 72905–1370
Landholding Agency: Army
Property Number: 21200110014
Status: Unutilized
GSA Number:
Reasons: Extensive deterioration

Bldg. 3850
Ft. Chaffee Maneuver Training Center
Ft. Chaffee AR 72905–1370
Landholding Agency: Army
Property Number: 21200110016
Status: Unutilized
GSA Number:
Reasons: Extensive deterioration

Bldg. 1336
Fort Chaffee
Ft. Chaffee AR 72905–1370
Landholding Agency: Army
Property Number: 21200140011
Status: Unutilized
GSA Number:
Reasons: Extensive deterioration

Bldg. 1759
Fort Chaffee
Ft. Chaffee AR 72905–1370
Landholding Agency: Army
Property Number: 21200140012
Status: Unutilized
GSA Number:
Reasons: Extensive deterioration

Bldgs. 2513, 2515
Fort Chaffee
Ft. Chaffee AR 72905–1370
Landholding Agency: Army
Property Number: 21200140014
Status: Unutilized
GSA Number:
Reasons: Extensive deterioration

Bldg. 01370
Ft. Chaffee Training Center
Ft. Chaffee AR 72905
Landholding Agency: Army
Property Number: 21200530001
Status: Unutilized
Reasons: Secured Area Extensive deterioration

8 Bldgs.
Pine Bluff Arsenal
Jefferson AR 71602
Landholding Agency: Army
Property Number: 21200820059
Status: Unutilized
Directions: 12330, 12332, 12334, 12336, 12338, 12340, 12342, 12406
Reasons: Secured Area

12 Bldgs.
Pine Bluff Arsenal;
Jefferson AR 71602
Landholding Agency: Army
Property Number: 21200820060
Status: Unutilized
Directions: 13698, 13710, 13740 thru 13749
Reasons: Secured Area

Bldg. 57230
Pine Bluff Arsenal
Pine Bluff AR 71602
Landholding Agency: Army
Property Number: 21201140080
Status: Unutilized
Comments: REDETERMINATION: Previously w/ property #21201140055; agency submitted additional info. re: the deteriorated state of property due to chem. contamination; non-removable
Reasons: Extensive deterioration Contamination

California

Bldg. 18
Riverbank Army Ammunition Plan
5300 Claus Road
Riverbank CA 95367
Landholding Agency: Army
Property Number: 21199012554
Status: Unutilized
Directions:
Comments:
Reasons: Within 2000 ft. of flammable or explosive material Secured Area

Bldg. 2
Riverbank Army Ammunition Plant
5300 Claus Road
Riverbank CA 95367
Landholding Agency: Army
Property Number: 21199013582
Status: Underutilized
Directions:
Comments:
Reasons: Secured Area

Bldg. 3
Riverbank Army Ammunition Plant
5300 Claus Road
Riverbank CA 95367
Landholding Agency: Army
Property Number: 21199013583
Status: Underutilized
Directions: 0 0000000
Comments:
Reasons: Secured Area

Bldg. 4
Riverbank Army Ammunition Plant
5300 Claus Road
Riverbank CA 95367
Landholding Agency: Army
Property Number: 21199013584
Status: Underutilized
Directions:
Comments:
Reasons: Secured Area

Bldg. 5
Riverbank Army Ammunition Plant
5300 Claus Road
Riverbank CA 95367
Landholding Agency: Army
Property Number: 21199013585
Status: Underutilized
Directions:
Comments:
Reasons: Secured Area

Bldg. 6
Riverbank Army Ammunition Plant
5300 Claus Road
Riverbank CA 95367
Landholding Agency: Army
Property Number: 21199013586
Status: Underutilized
Directions:
Comments:
Reasons: Secured Area

Bldg. 7
Riverbank Army Ammunition Plant
5300 Claus Road
Riverbank CA 95367
Landholding Agency: Army
Property Number: 21199013587
Status: Underutilized
Directions:
Comments:
Reasons: Secured Area

Bldg. 8
Riverbank Army Ammunition Plant
5300 Claus Road
Riverbank CA 95367
Landholding Agency: Army
Property Number: 21199013588
Status: Underutilized
Directions:
Comments:
Reasons: Secured Area

Bldg. 156
Riverbank Army Ammunition Plant
5300 Claus Road
Riverbank CA 95367
Landholding Agency: Army
Property Number: 21199013590
Status: Underutilized
Directions:
Comments:
Reasons: Secured Area

Bldg. 13 Riverbank Ammun Plant
5300 Claus Road
Riverbank CA 95367
Landholding Agency: Army
Property Number: 21199120162
Status: Underutilized
Directions:
Comments:
Reasons: Secured Area

Bldg. 171 Riverbank Ammun Plant
5300 Claus Road
Riverbank CA 95367
Landholding Agency: Army
Property Number: 21199120163
Status: Underutilized
Directions:
Comments:
Reasons: Secured Area

Bldg. 178 Riverbank Ammun Plant
5300 Claus Road
Riverbank CA 95367
Landholding Agency: Army
Property Number: 21199120164
Status: Underutilized
Directions:
Comments:
Reasons: Secured Area

Bldg. 1
Riverbank Army Ammunition Plant
Riverbank CA 95367
Landholding Agency: Army
Property Number: 21199240444
Status: Underutilized
Directions:
Comments:
Reasons: Secured Area

Bldg. 120
Riverbank Army Ammunition Plant
Riverbank CA 95367
Landholding Agency: Army
Property Number: 21199240445
Status: Underutilized
Directions:
Comments:
Reasons: Secured Area

Bldg. 181
Riverbank Army Ammunition Plant
Riverbank CA 95367
Landholding Agency: Army
Property Number: 21199240446
Status: Underutilized
Directions:
Comments:
Reasons: Secured Area

Building S–45
DDRW Sharpe Facility
Lathrop CA 95331
Landholding Agency: Army
Property Number: 21199610289
Status: Unutilized
Directions:
Comments:
Reasons: Secured Area

Bldgs. 18013, 18030
Camp Roberts
Camp Roberts CA
Landholding Agency: Army
Property Number: 21199730014
Status: Excess
Directions:
Comments:
Reasons: Extensive deterioration

2 Div. HQ Bldgs.
Camp Roberts
Camp Roberts CA 93446
Landholding Agency: Army
Property Number: 21199820205
Status: Unutilized
Directions:
Comments:
Reasons: Extensive deterioration Secured Area

Chlorinator Bldg.
Camp Roberts
Camp Roberts CA 93446
Landholding Agency: Army
Property Number: 21199820217
Status: Unutilized
Directions:
Comments:
Reasons: Secured Area Extensive deterioration

2 QM Repair Shops
Camp Roberts
Camp Roberts CA 93446
Landholding Agency: Army
Property Number: 21199820220
Status: Unutilized
Directions:
Comments:
Reasons: Extensive deterioration Secured Area

Scale House
Camp Roberts
Camp Roberts CA 93446
Landholding Agency: Army
Property Number: 21199820222
Status: Unutilized
Directions:
Comments:
Reasons: Secured Area Extensive deterioration

Insect. Storage Fac.
Camp Roberts
Camp Roberts CA 93446
Landholding Agency: Army
Property Number: 21199820225
Status: Unutilized
Directions:
Comments:
Reasons: Secured Area Extensive deterioration

Oil Storage Bldg.
Camp Roberts
Camp Roberts CA 93446
Landholding Agency: Army
Property Number: 21199820234
Status: Unutilized
Directions:
Comments:
Reasons: Secured Area Extensive deterioration

Bldg. 127
Sierra Army Depot
Herlong CA 96113
Landholding Agency: Army
Property Number: 21199840015
Status: Unutilized
Directions:
Comments:
Reasons: Secured Area

Bldg. 576
Sierra Army Depot
Herlong CA 96113
Landholding Agency: Army
Property Number: 21199920033
Status: Unutilized
GSA Number:
Reasons: Secured Area Within 2000 ft. of flammable or explosive material

Bldg. 578
Sierra ArmyDepot
Herlong CA 96113
Landholding Agency: Army
Property Number: 21199920034
Status: Unutilized
GSA Number:
Reasons: Within 2000 ft. of flammable or explosive material; Secured Area

Bldg. 597
Sierra Army Depot
Herlong CA 96113
Landholding Agency: Army
Property Number: 21199920035
Status: Unutilized
GSA Number:
Reasons: Secured Area; Within 2000 ft. of flammable or explosive material

Bldg. 598
Sierra Army Depot
Herlong CA 96113
Landholding Agency: Army
Property Number: 21199920036
Status: Unutilized
GSA Number:
Reasons: Within 2000 ft. of flammable or explosive material; Secured Area

4 Bldgs.
Fort Irwin813, 415, 543, 445
Ft. Irwin CA 92310
Landholding Agency: Army
Property Number: 21199920037
Status: Unutilized
GSA Number:
Reasons: Extensive deterioration; Secured Area

17 Bldgs.
Fort Irwin
Ft. Irwin CA 92310
Landholding Agency: Army
Property Number: 21199920038
Status: Unutilized
GSA Number:
Directions: 419, 434, 456, 458, 460, 514, 530, 412, 512, 524, 616, 532, 534, 535, 540, 543, 551
Reasons: Secured Area; Extensive deterioration

Bldg. S–9
Sharpe Site
French Camp CA 95231
Landholding Agency: Army
Property Number: 21199930021
Status: Unutilized

GSA Number:
Reasons: Secured Area

24 Garages
Presidio of Monterey
Monterey CA 93944
Landholding Agency: Army
Property Number: 21199940051
Status: Unutilized
GSA Number:
Reasons: Extensive deterioration

Bldg. S–10
Sharpe Site
Lathrop CA 95231
Landholding Agency: Army
Property Number: 21200030005
Status: Unutilized
GSA Number:
Reasons: Secured Area

Bldg. S–11
Sharpe Site
Lathrop CA 95231
Landholding Agency: Army
Property Number: 21200030006
Status: Unutilized
GSA Number:
Reasons: Secured Area

Bldg. S–14
Sharpe Site
Lathrop CA 95231
Landholding Agency: Army
Property Number: 21200030007
Status: Unutilized
GSA Number:
Reasons: Secured Area

Bldg. S–110
Sharpe Site
Lathrop CA 95231
Landholding Agency: Army
Property Number: 21200030008
Status: Unutilized
GSA Number:
Reasons: Secured Area

Bldg. S–380
Sharpe Site
Lathrop CA 95231
Landholding Agency: Army
Property Number: 21200030010
Status: Unutilized
GSA Number:
Reasons: Secured Area

Bldg. S–613
Sharpe Site
Lathrop CA 95231
Landholding Agency: Army
Property Number: 21200030011
Status: Unutilized
GSA Number:
Reasons: Secured Area

Bldg. S–648
Sharpe Site
Lathrop CA 95231
Landholding Agency: Army
Property Number: 21200030012
Status: Unutilized
GSA Number:
Reasons: Secured Area

Bldg. S–654
Sharpe Site
Lathrop CA 95231
Landholding Agency: Army
Property Number: 21200030013
Status: Unutilized
GSA Number:
Reasons: Secured Area

Bldg. S–691
Sharpe Site
Lathrop CA 95231
Landholding Agency: Army
Property Number: 21200030014
Status: Unutilized
GSA Number:
Reasons: Secured Area

Bldg. S–3A
Tracy Facility
Tracy CA 95376
Landholding Agency: Army
Property Number: 21200030015
Status: Unutilized
GSA Number:
Reasons: Secured Area

Bldgs. 468, 470, 472
Fort Irwin
Ft. Irwin CA 92310
Landholding Agency: Army
Property Number: 21200030016
Status: Unutilized
GSA Number:
Reasons: Secured Area; Extensive deterioration

Bldgs. T–639, T–642
Fort Irwin
Ft. Irwin CA 92310
Landholding Agency: Army
Property Number: 21200030017
Status: Unutilized
GSA Number:
Reasons: Secured Area; Extensive deterioration

Bldg. T–646
Fort Irwin
Ft. Irwin CA 92310
Landholding Agency: Army
Property Number: 21200030018
Status: Unutilized
GSA Number:
Reasons: Extensive deterioration; Secured Area

Bldgs. P–15000, P–15004
Fort Irwin
Ft. Irwin CA 92310
Landholding Agency: Army
Property Number: 21200040014
Status: Excess
Comments: P–15000 is demolished
Reasons: Extensive deterioration

Bldg. S–508
Sharpe Site
Lathrop CA 95231
Landholding Agency: Army
Property Number: 21200040015
Status: Underutilized
GSA Number:
Reasons: Secured Area

Bldg. S–1
Sharpe Site
Lathrop CA 95231
Landholding Agency: Army
Property Number: 21200120029
Status: Unutilized
GSA Number:
Reasons: Secured Area

Bldg. S–2
Sharpe Site
Lathrop CA 95231
Landholding Agency: Army
Property Number: 21200120030
Status: Unutilized
GSA Number:
Reasons: Secured Area

Bldg. P–32
Sharpe Site
Lathrop CA 95231
Landholding Agency: Army
Property Number: 21200120031
Status: Unutilized
GSA Number:
Reasons: Secured Area

Bldg. S–42
Sharpe Site
Lathrop CA 95231
Landholding Agency: Army
Property Number: 21200120032
Status: Unutilized
GSA Number:
Reasons: Secured Area

Bldg. S–44
Sharpe Site
Lathrop CA 95231
Landholding Agency: Army
Property Number: 21200120033
Status: Unutilized
GSA Number:
Reasons: Secured Area

Bldg. S–213
Sharpe Site
Lathrop CA 95231
Landholding Agency: Army
Property Number: 21200120034
Status: Unutilized
GSA Number:
Reasons: Secured Area

Bldg. P–217
Sharpe Site
Lathrop CA 95231
Landholding Agency: Army
Property Number: 21200120035
Status: Unutilized
GSA Number:
Reasons: Secured Area

Bldg. S–218
Sharpe Site
Lathrop CA 95231
Landholding Agency: Army
Property Number: 21200120036
Status: Unutilized
GSA Number:
Reasons: Secured Area

Bldg. S–288
Sharpe Site
Lathrop CA 95231
Landholding Agency: Army
Property Number: 21200120037
Status: Unutilized
GSA Number:
Reasons: Secured Area

Bldg. P–403
Sharpe Site
Lathrop CA 95231
Landholding Agency: Army
Property Number: 21200120038
Status: Unutilized
GSA Number:
Reasons: Secured Area

Bldg. P–405
Sharpe Site
Lathrop CA 95231
Landholding Agency: Army
Property Number: 21200120039
Status: Unutilized
GSA Number:
Reasons: Secured Area

Bldg. S–647

Sharpe Site
Lathrop CA 95231
Landholding Agency: Army
Property Number: 21200130004
Status: Unutilized
GSA Number:
Reasons: Secured Area; Extensive deterioration

Bldg. T–333
Fort Irwin
Ft. Irwin CA 92310
Landholding Agency: Army
Property Number: 21200210001
Status: Unutilized
GSA Number:
Reasons: Extensive deterioration; Secured Area

Bldg. T–451
Fort Irwin
Ft. Irwin CA 92310
Landholding Agency: Army
Property Number: 21200210002
Status: Unutilized
GSA Number:
Reasons: Secured Area; Extensive deterioration

Bldg. S–494
Fort Irwin
Ft. Irwin CA 92310
Landholding Agency: Army
Property Number: 21200210003
Status: Unutilized
GSA Number:
Reasons: Secured Area; Extensive deterioration

Bldg. T–580
Fort Irwin
Ft. Irwin CA 92310
Landholding Agency: Army
Property Number: 21200210004
Status: Unutilized
GSA Number:
Reasons: Extensive deterioration; Secured Area

Bldg. T–814
Fort Irwin
Ft. Irwin CA 92310
Landholding Agency: Army
Property Number: 21200210005
Status: Unutilized
GSA Number:
Reasons: Extensive deterioration; Secured Area

3 Bldgs.
DDJC Sharpe
S00004, 00006, 00012
Lathrop CA 95231
Landholding Agency: Army
Property Number: 21200240025
Status: Unutilized
GSA Number:
Reasons: Secured Area

Bldg. S00108
DDJC Sharpe
Lathrop CA 95231
Landholding Agency: Army
Property Number: 21200240026
Status: Unutilized
GSA Number:
Reasons: Secured Area

Bldgs. S00161, 00162
DDJC Sharpe
Lathrop CA 95231
Landholding Agency: Army
Property Number: 21200240027
Status: Unutilized
GSA Number:
Reasons: Secured Area

Bldg. S00221
DDJC Sharpe
Lathrop CA 95231
Landholding Agency: Army
Property Number: 21200240028
Status: Unutilized
GSA Number:
Reasons: Secured Area

4 Bldgs.
DDJC Sharpe
S00482, 00483, 00484, 00485
Lathrop CA 95231
Landholding Agency: Army
Property Number: 21200240029
Status: Unutilized
GSA Number:
Reasons: Secured Area

Bldg. S00660
DDJC Sharpe
Lathrop CA 95231
Landholding Agency: Army
Property Number: 21200240030
Status: Unutilized
GSA Number:
Reasons: Secured Area

Bldg. P00620
DDJC-Sharpe
Lathrop CA 95231
Landholding Agency: Army
Property Number: 21200330007
Status: Excess
GSA Number:
Reasons: Secured Area

Bldg. 00079
Riverbank Army Ammo Plant
Stanaslaus CA 95357–7241
Landholding Agency: Army
Property Number: 21200530003
Status: Excess
Reasons: Extensive deterioration

Bldg. T6427
Camp Roberts
San Miguel CA 93451
Landholding Agency: Army
Property Number: 21200530004
Status: Unutilized
Reasons: Extensive deterioration; Secured Area

Bldgs. 00208, 00210
Camp Roberts
San Miguel CA 93451
Landholding Agency: Army
Property Number: 21200540007
Status: Unutilized
Reasons: Extensive deterioration

Bldgs. 00302, 00306, 00321
Camp Roberts
San Miguel CA 93451
Landholding Agency: Army
Property Number: 21200540008
Status: Unutilized
Reasons: Extensive deterioration

4 Bldgs.
Camp Roberts
00921, T0929, T2014, T0948
San Miguel CA 93451
Landholding Agency: Army
Property Number: 21200540009
Status: Unutilized
Reasons: Extensive deterioration

Bldgs. T1003, T1008
Camp Roberts
San Miguel CA 93451
Landholding Agency: Army
Property Number: 21200540010
Status: Unutilized
Reasons: Extensive deterioration

5 Bldgs.
Camp Roberts
T1010, T1012, T2009, T2010, T2012
San Miguel CA 93451
Landholding Agency: Army
Property Number: 21200540011
Status: Unutilized
Reasons: Extensive deterioration

Bldgs. T1121, T1221, T3014
Camp Roberts
San Miguel CA 93451
Landholding Agency: Army
Property Number: 21200540012
Status: Unutilized
Reasons: Extensive deterioration

4 Bldgs.
Camp Roberts
T1124, T1224, T3040, T7014
San Miguel CA 93451
Landholding Agency: Army
Property Number: 21200540013
Status: Unutilized
Reasons: Extensive deterioration

54 Bldgs.
Camp Roberts
San Miguel CA 93451
Landholding Agency: Army
Property Number: 21200540014
Status: Unutilized
Directions: T1202–T1209, T1212–T1219, T1302, T3102–T3109, T3112–T3119, T3302–T3309, T3312–T3316, T6102–T6107, T6308–T6309
Reasons: Extensive deterioration

4 Bldgs.
Camp Roberts
San Miguel CA 93451
Landholding Agency: Army
Property Number: 21200540015
Status: Unutilized
Directions: T1222, T1223, T1225, T1226
Reasons: Extensive deterioration

Bldgs. T1720, T1721
Camp Roberts
San Miguel CA 93451
Landholding Agency: Army
Property Number: 21200540016
Status: Unutilized
Reasons: Extensive deterioration

Bldgs. T3001, 03002, T7016
Camp Roberts
San Miguel CA 93451
Landholding Agency: Army
Property Number: 21200540017
Status: Unutilized
Reasons: Extensive deterioration

4 Bldgs.
Camp Roberts
03003, T4002, T3013, T3015
San Miguel CA 93451
Landholding Agency: Army
Property Number: 21200540018
Status: Unutilized
Reasons: Extensive deterioration

4 Bldgs.
Camp Roberts
T3025, T3037, T3046, T3064

San Miguel CA 93451
Landholding Agency: Army
Property Number: 21200540019
Status: Unutilized
Reasons: Extensive deterioration

22 Bldgs.
Camp Roberts
San Miguel CA 93451
Landholding Agency: Army
Property Number: 21200540020
Status: Unutilized
Directions: 03101, 03110, 03111, 03120, 05011, 06310, T1120, T1201, T1210, T1211, T1220, T1301, T3211, T3220, T3301, T3310, T3311, T4011, T6110, T6111, T6210, T6211
Reasons: Extensive deterioration

8 Bldgs.
Camp Roberts
San Miguel CA 93451
Landholding Agency: Army
Property Number: 21200540021
Status: Unutilized
Directions: 03121, 03122, 03124–03125, T1122, T1123, T1125–T1126
Reasons: Extensive deterioration

Bldgs. T3321, T3322, T3324
Camp Roberts
San Miguel CA 93451
Landholding Agency: Army
Property Number: 21200540022
Status: Unutilized
Reasons: Extensive deterioration

Bldg. T3325
Camp Roberts
San Miguel CA 93451
Landholding Agency: Army
Property Number: 21200540023
Status: Unutilized
Reasons: Extensive deterioration

5 Bldgs.
Camp Roberts
04003, T4004, 04005, T4008, 04015
San Miguel CA 93451
Landholding Agency: Army
Property Number: 21200540024
Status: Unutilized
Reasons: Extensive deterioration

5 Bldgs.
Camp Roberts
05003, 05004, 05005, 05007, 05015
San Miguel CA 93451
Landholding Agency: Army
Property Number: 21200540025
Status: Unutilized
Reasons: Extensive deterioration

Bldgs. 06043, T6044, 06081
Camp Roberts
San Miguel CA 93451
Landholding Agency: Army
Property Number: 21200540026
Status: Unutilized
Reasons: Extensive deterioration

Bldgs. 06409, T6411
Camp Roberts
San Miguel CA 93451
Landholding Agency: Army
Property Number: 21200540027
Status: Unutilized
Reasons: Extensive deterioration

Bldg. 07006
Camp Roberts
San Miguel CA 93451
Landholding Agency: Army
Property Number: 21200540028
Status: Unutilized
Reasons: Extensive deterioration

Bldgs. 14002, 14101
Camp Roberts
San Miguel CA 93451
Landholding Agency: Army
Property Number: 21200540029
Status: Unutilized
Reasons: Extensive deterioration

Bldg. 27110
Camp Roberts
San Miguel CA 93451
Landholding Agency: Army
Property Number: 21200540030
Status: Unutilized
Reasons: Extensive deterioration

Bldg. 76910
Camp Roberts
San Miguel CA 93451
Landholding Agency: Army
Property Number: 21200540031
Status: Unutilized
Reasons: Extensive deterioration

Bldgs. 00548, 00549, 00550
March AFRC
Riverside CA 92518
Landholding Agency: Army
Property Number: 21200710001
Status: Unutilized
Reasons: Extensive deterioration

Bldgs. 02506, 02560
March AFRC
Riverside CA 92518
Landholding Agency: Army
Property Number: 21200710002
Status: Unutilized
Reasons: Extensive deterioration

Bldg. 00117
Riverbank AAP
Stanislaus CA 95367
Landholding Agency: Army
Property Number: 21200840009
Status: Excess
Reasons: Secured Area; Extensive deterioration

Bldgs. 00040, 00412
SHARPE
Lathrop CA 95231
Landholding Agency: Army
Property Number: 21200920031
Status: Underutilized
Reasons: Secured Area

Bldg. 00234
DDJC Tracy
San Joaquin CA 95304
Landholding Agency: Army
Property Number: 21200930005
Status: Excess
Reasons: Secured Area

Bldg. 00005
Los Alamitos Joint Force Training Base
Orange CA 90720
Landholding Agency: Army
Property Number: 21200940023
Status: Excess
Reasons: Extensive deterioration

13 Bldgs.
Fort Irwin
San Bernardino CA 92310
Landholding Agency: Army
Property Number: 21201040003
Status: Unutilized
Directions: 100, 338, 343, 385, 411, 412, 413, 486, 489, 490, 491, 493, 5006
Reasons: Secured Area

4 Bldgs.
JFTB
Los Alanitos CA 90720
Landholding Agency: Army
Property Number: 21201110046
Status: Excess
Directions: 00147, 00207, 00259, 00297
Reasons: Extensive deterioration

Bldg. 186
Ft. Hunter Liggett
Monterey CA
Landholding Agency: Army
Property Number: 21201120032
Status: Unutilized
Reasons: Contamination

Bldg. 00023
Sierra Army Depot
Herlong CA
Landholding Agency: Army
Property Number: 21201120054
Status: Unutilized
Reasons: Secured Area

7 Bldgs.
Sierra Army Depot
Herlong CA
Landholding Agency: Army
Property Number: 21201120055
Status: Unutilized
Directions: 633, 639, 640, 641, 642, 643, 634
Reasons: Secured Area

Bldgs. 00186 & 00621
null
Fort Hunter Liggett CA 93928
Landholding Agency: Army
Property Number: 21201130067
Status: Unutilized
Reasons: Secured Area

2 Bldgs.
Sierra Army Depot
Herlong CA 96113
Landholding Agency: Army
Property Number: 21201140076
Status: Unutilized
Directions: 00349, 00587
Reasons: Extensive deterioration; Secured Area; Contamination

Bldg. 00203
4th Street, Sierra Army Depot
Herlong CA 96113
Landholding Agency: Army
Property Number: 21201140077
Status: Unutilized
Reasons: Secured Area; Contamination

Colorado

Bldg. T–317
Rocky Mountain Arsenal
Commerce CO 80022–2180
Landholding Agency: Army
Property Number: 21199320013
Status: Unutilized
Directions:
Comments:
Reasons: Secured Area; Within 2000 ft. of flammable or explosive material

Bldg. T–412
Rocky Mountain Arsenal
Commerce CO 80022–2180
Landholding Agency: Army
Property Number: 21199320014
Status: Unutilized
Directions:

Comments:
Reasons: Secured Area; Other—Extensive deterioration; Within 2000 ft. of flammable or explosive material

Bldg. 431
Rocky Mountain Arsenal
Commerce CO 80022–2180
Landholding Agency: Army
Property Number: 21199320015
Status: Unutilized
Directions:
Comments:
Reasons: Within 2000 ft. of flammable or explosive material; Other—Extensive deterioration; Secured Area

Bldg. 433
Rocky Mountain Arsenal
Commerce CO 80022–2180
Landholding Agency: Army
Property Number: 21199320016
Status: Unutilized
Directions:
Comments:
Reasons: Secured Area; Other—Extensive deterioration; Within 2000 ft. of flammable or explosive material

Bldg. 00087
Pueblo Chemical Depot
Pueblo CO 81006–9330
Landholding Agency: Army
Property Number: 21200030019
Status: Unutilized
GSA Number:
Reasons: Extensive deterioration

Bldg. 00088
Pueblo Chemical Depot
Pueblo CO 81006–9330
Landholding Agency: Army
Property Number: 21200030020
Status: Unutilized
GSA Number:
Reasons: Extensive deterioration

Bldg. 00096
Pueblo Chemical Depot
Pueblo CO 81006–9330
Landholding Agency: Army
Property Number: 21200030021
Status: Unutilized
GSA Number:
Reasons: Extensive deterioration

Bldg. 0051
Pueblo Chemical Depot
Pueblo CO 81006
Landholding Agency: Army
Property Number: 21200420165
Status: Unutilized
Reasons: Extensive deterioration

Bldg. 00630
Pueblo Chemical Depot
Pueblo CO 81006
Landholding Agency: Army
Property Number: 21200420166
Status: Unutilized
Reasons: Extensive deterioration

Bldg. 00036
Pueblo Chemical Depot
Pueblo CO 81006
Landholding Agency: Army
Property Number: 21200610009
Status: Underutilized
Reasons: Secured Area

Bldg. 00547
Pueblo Chemical Depot
Pueblo CO 81006
Landholding Agency: Army
Property Number: 21200610010
Status: Excess
Reasons: Extensive deterioration

Bldg. 00945
Pueblo Chemical Depot
Pueblo CO 81006
Landholding Agency: Army
Property Number: 21200630023
Status: Unutilized
Reasons: Secured Area

Bldgs. 0111a, 0112a, 0113a
Pueblo Chemical Depot
Pueblo CO 81006
Landholding Agency: Army
Property Number: 21200720002
Status: Unutilized
Reasons: Secured Area

4 Bldgs.
Fort Carson
56231, 56232, 56234, 56250
El Paso CO 80913
Landholding Agency: Army
Property Number: 21200720003
Status: Unutilized
Reasons: Secured Area

Bldgs. 00519, 00535, 00560
Pueblo Chemical Depot
Pueblo CO 81006
Landholding Agency: Army
Property Number: 21200720008
Status: Underutilized
Reasons: Secured Area

Bldgs. S6231, S6232
Fort Carson
El Paso CO 80913
Landholding Agency: Army
Property Number: 21200740003
Status: Unutilized
Reasons: Secured Area

Bldgs. S6234, S6250
Fort Carson
El Paso CO 80913
Landholding Agency: Army
Property Number: 21200740004
Status: Unutilized
Reasons: Secured Area

Bldg. 06284
Fort Carson
El Paso CO 80913
Landholding Agency: Army
Property Number: 21200820063
Status: Unutilized
Reasons: Secured Area

Bldgs. R065A, 03887, 07804
Fort Carson
El Paso CO 80913
Landholding Agency: Army
Property Number: 21200930007
Status: Unutilized
Reasons: Secured Area

Bldg. 00590
Pueblo Chemical Depot
Pueblo CO 81006
Landholding Agency: Army
Property Number: 21200930008
Status: Unutilized
Reasons: Secured Area

Bldg. 06289
7086 Albanese Loop
Fort Carson CO 80913
Landholding Agency: Army
Property Number: 21201130019
Status: Unutilized
Reasons: Secured Area; Extensive deterioration

Bldg. 06290
7090 Albanese Loop
Fort Carson CO 80913
Landholding Agency: Army
Property Number: 21201130020
Status: Unutilized
Reasons: Extensive deterioration; Secured Area

6 Bldgs.
1620–1658 Burris St.
Fort Carson CO 80913
Landholding Agency: Army
Property Number: 21201130023
Status: Unutilized
Directions: 00626, 00627, 00631, 00633, 00634, 00635
Reasons: Secured Area

7 Bldgs.
Ft. Carson
Ft. Carson CO 80913
Landholding Agency: Army
Property Number: 21201140005
Status: Unutilized
Directions: 1382, 1383, 1384, 1385, 1386, 1387, 1389
Comments: Friable asbestos identified in Bldg. 1382
Reasons: Within airport runway clear zone; Contamination

2 Bldgs.
Ft. Carson
Ft. Carson CO 80913
Landholding Agency: Army
Property Number: 21201140006
Status: Unutilized
Directions: 1380 and 1381
Comments: Bldg. 1380 has flammable explosive materials
Reasons: Extensive deterioration; Within 2000 ft. of flammable or explosive material

10 Bldgs.
Pueblo Chemical Depot
Pueblo CO 81006
Landholding Agency: Army
Property Number: 21201140062
Status: Excess
Directions: 0015S, 0016A, 0016S, 0017S, 0018S, 0019S, 00S34, 0014S, 0013S, 0012S
Reasons: Contamination; Secured Area

Bldg. 00034
Pueblo Chemical Depot
Pueblo CO 81006
Landholding Agency: Army
Property Number: 21201140066
Status: Excess
Comments: not cost effective to repair
Reasons: Extensive deterioration

9 Bldgs.
Pueblo Chemical Depot
Pueblo CO 81006
Landholding Agency: Army
Property Number: 21201210053
Status: Unutilized
Directions: 701, 706, 711, 716, 731, 736, 766, 771, 776
Comments: nat'l security concerns; no public access and no alternative method to gain access
Reasons: Secured Area

Florida

Bldg. 00200
Recreation Area Pool

Destin FL
Landholding Agency: Army
Property Number: 21201130032
Status: Excess
Reasons: Extensive deterioration; Secured Area

Georgia

Fort Stewart
Sewage Treatment Plant
Ft. Stewart GA 31314
Landholding Agency: Army
Property Number: 21199013922
Status: Unutilized
Directions:
Comments:
Reasons: Other—Sewage treatment

Bldg. 308, Fort Gillem
null
Ft. Gillem GA 30050–5000
Landholding Agency: Army
Property Number: 21199620815
Status: Unutilized
Directions:
Comments:
Reasons: Extensive deterioration; Secured Area

Bldg. P–8640
Hunter Army Airfield
Savannah GA 31409
Landholding Agency: Army
Property Number: 21199830068
Status: Unutilized
Directions:
Comments:
Reasons: Extensive deterioration

Bldg. P8121
Fort Stewart
Ft. Stewart GA 31314–3913
Landholding Agency: Army
Property Number: 21199940060
Status: Excess
GSA Number:
Reasons: Extensive deterioration

Bldg. 710
Fort Gillem
Ft. Gillem GA
Landholding Agency: Army
Property Number: 21200140016
Status: Unutilized
GSA Number:
Reasons: Secured Area; Extensive deterioration

Bldg. 00933
Fort Gillem
Ft. Gillem GA 30050–5233
Landholding Agency: Army
Property Number: 21200220011
Status: Unutilized
GSA Number:
Reasons: Extensive deterioration

Bldg. 00934
Fort Gillem
Ft. Gillem GA 30050–5233
Landholding Agency: Army
Property Number: 21200220012
Status: Unutilized
GSA Number:
Reasons: Extensive deterioration

Bldgs. 116–119
Fort Gillem
Ft. Gillem GA 30297
Landholding Agency: Army
Property Number: 21200230005
Status: Unutilized
GSA Number:
Reasons: Extensive deterioration

Bldg. 00111
Fort Gillem
Ft. Gillem GA 30050–5101
Landholding Agency: Army
Property Number: 21200340013
Status: Unutilized
GSA Number:
Reasons: Extensive deterioration

Bldg. 00116
Fort Gillem
Ft. Gillem GA 30050–5101
Landholding Agency: Army
Property Number: 21200340014
Status: Unutilized
GSA Number:
Reasons: Extensive deterioration

Bldg. 00226
Fort Gillem
Ft. Gillem GA 30050–5101
Landholding Agency: Army
Property Number: 21200340015
Status: Unutilized
GSA Number:
Reasons: Extensive deterioration

Bldgs. 00733, 00753
Fort Gillem
Ft. Gillem GA 30050–5101
Landholding Agency: Army
Property Number: 21200340016
Status: Unutilized
GSA Number:
Reasons: Extensive deterioration

Bldg. 00111
Fort Gillem
Forest Park GA 30297–5122
Landholding Agency: Army
Property Number: 21200420074
Status: Unutilized
Reasons: Extensive deterioration

Bldg. 404
Fort Gillem
Forest Park GA 30297
Landholding Agency: Army
Property Number: 21200420075
Status: Unutilized
Reasons: Extensive deterioration

Bldg. 00813
Fort Gillem
Forest Park GA 30297
Landholding Agency: Army
Property Number: 21200420076
Status: Unutilized
Reasons: Extensive deterioration

Bldg. 00814
Fort Gillem
Forest Park GA 30297
Landholding Agency: Army
Property Number: 21200420077
Status: Unutilized
Reasons: Extensive deterioration

Bldg. 00817
Fort Gillem
Forest Park GA 30297
Landholding Agency: Army
Property Number: 21200420078
Status: Unutilized
Reasons: Extensive deterioration

Bldg. 00818
Fort Gillem
Forest Park GA 30297
Landholding Agency: Army
Property Number: 21200420079
Status: Unutilized
Reasons: Extensive deterioration

Bldg. 00819
Fort Gillem
Forest Park GA 30297
Landholding Agency: Army
Property Number: 21200420080
Status: Unutilized
Reasons: Extensive deterioration

Bldg. 00820
Fort Gillem
Forest Park GA 30297
Landholding Agency: Army
Property Number: 21200420081
Status: Unutilized
Reasons: Extensive deterioration

Bldg. 00822
Fort Gillem
Forest Park GA 30297
Landholding Agency: Army
Property Number: 21200420082
Status: Unutilized
Reasons: Extensive deterioration

Bldgs. 18503, 18504, 18505
Fort Stewart
Hinesville GA 31314
Landholding Agency: Army
Property Number: 21200540034
Status: Excess
Reasons: Extensive deterioration

4 Bldgs.
Fort Gordon
25104, 81102, OT002, OT036
Richmond GA 30905
Landholding Agency: Army
Property Number: 21200610012
Status: Unutilized
Reasons: Extensive deterioration

Bldg. 00022
Fort Stewart
Hinesville GA 31314
Landholding Agency: Army
Property Number: 21200710005
Status: Excess
Reasons: Extensive deterioration

Bldgs. 01001, 01080, 0113
Fort Stewart
Hinesville GA 31314
Landholding Agency: Army
Property Number: 21200710006
Status: Excess
Reasons: Extensive deterioration

Bldgs. 02110, 02111
Fort Stewart
Hinesville GA 31314
Landholding Agency: Army
Property Number: 21200710007
Status: Excess
Reasons: Extensive deterioration

Bldgs. 07703, 07783
Fort Stewart
Hinesville GA 31314
Landholding Agency: Army
Property Number: 21200710008
Status: Excess
Reasons: Extensive deterioration

Bldgs. 08061, 08091
Fort Stewart
Hinesville GA 31314
Landholding Agency: Army
Property Number: 21200710009
Status: Excess
Reasons: Extensive deterioration

Bldg. 08053

Hunter Army Airfield
Savannah GA 31409
Landholding Agency: Army
Property Number: 21200710010
Status: Excess
Reasons: Extensive deterioration

Bldgs. 00404, 00406
Fort Gordon
Richmond GA 30905
Landholding Agency: Army
Property Number: 21200720009
Status: Unutilized
Reasons: Extensive deterioration

4 Bldgs.
Fort Gordon 5104, 81102, 0T002, 0T036
Richmond GA 30905
Landholding Agency: Army
Property Number: 21200720010
Status: Unutilized
Reasons: Extensive deterioration

Bldgs. 00205, 01016, 01567
Fort Stewart
Hinesville GA 31314
Landholding Agency: Army
Property Number: 21200720011
Status: Excess
Reasons: Extensive deterioration

Bldgs. 00129, 00145
Hunter Army Airfield
Savannah GA 31409
Landholding Agency: Army
Property Number: 21200720012
Status: Excess
Reasons: Extensive deterioration

Bldgs. 00956, 00958, 00966
Fort Stewart
Hinesville GA 31314
Landholding Agency: Army
Property Number: 21200740007
Status: Excess
Reasons: Extensive deterioration

Bldg. 00930
Hunter Army Airfield
Savannah GA 31409
Landholding Agency: Army
Property Number: 21200740117
Status: Excess
Reasons: Extensive deterioration

Bldgs. 01241, 01246
Hunter Army Airfield
Savannah GA 31409
Landholding Agency: Army
Property Number: 21200740118
Status: Excess
Reasons: Extensive deterioration

Bldg. 06052
Hunter Army Airfield
Savannah GA 31409
Landholding Agency: Army
Property Number: 21200740119
Status: Excess
Reasons: Extensive deterioration

Bldgs. 00957, 01001
Fort Stewart
Hinesville GA 31314
Landholding Agency: Army
Property Number: 21200740123
Status: Excess
Reasons: Extensive deterioration

Bldgs. 01013, 01014, 01016
Fort Stewart
Hinesville GA 31314
Landholding Agency: Army
Property Number: 21200740124
Status: Excess
Reasons: Extensive deterioration

Bldgs. 01080, 07337, 15016
Fort Stewart
Hinesville GA 31314
Landholding Agency: Army
Property Number: 21200740125
Status: Excess
Reasons: Extensive deterioration

Bldg. 00902
Fort Gillem
Forest Park GA
Landholding Agency: Army
Property Number: 21200810003
Status: Unutilized
Reasons: Secured Area

Bldg. 00816
Hunter Army Airfield
Savannah GA 31409
Landholding Agency: Army
Property Number: 21200820065
Status: Excess
Reasons: Extensive deterioration

Bldg. 00021
Fort Stewart
Hinesville GA 31314
Landholding Agency: Army
Property Number: 21200820066
Status: Excess
Reasons: Extensive deterioration

Bldgs. 00705, 00706, 00803
Hunter Army Airfield
Chatham GA 31409
Landholding Agency: Army
Property Number: 21200920012
Status: Excess
Reasons: Secured Area

5 Bldgs.
Fort Stewart
Liberty GA 31314
Landholding Agency: Army
Property Number: 21200920013
Status: Excess
Directions: 00270, 00272, 00276, 00277, 00616, 00718
Reasons: Secured Area

Bldgs. 1305, 1306, 1307, 1308
Hunter Army Airfield
Chatham GA 31409
Landholding Agency: Army
Property Number: 21200920033
Status: Excess
Reasons: Extensive deterioration

Bldgs. 728, 729
Fort Stewart
Liberty GA 31314
Landholding Agency: Army
Property Number: 21200920034
Status: Excess
Reasons: Secured Area

7 Bldgs.
Fort Stewart
Liberty GA 31314
Landholding Agency: Army
Property Number: 21200940025
Status: Excess
Directions: 918, 1076, 1103, 1268, 7803, 7804, 7805
Reasons: Extensive deterioration

Bldgs. 240, 701, 719
Hunter Army Airfield
Savannah GA 31409
Landholding Agency: Army
Property Number: 21200940026
Status: Excess
Reasons: Extensive deterioration

Bldgs. TR9, TR10, TR11
Catoosa Area Training Center
Tunnel Hill GA 30755
Landholding Agency: Army
Property Number: 21201030006
Status: Excess
Reasons: Secured Area; Extensive deterioration

Bldg. 815
Hunter Army Airfield
Savannah GA 31409
Landholding Agency: Army
Property Number: 21201030008
Status: Excess
Reasons: Secured Area

Bldg. 1257
Fort Stewart
Hinesville GA 31314
Landholding Agency: Army
Property Number: 21201030009
Status: Excess
Reasons: Extensive deterioration

Bldg. 08708
Hunter Army Airfield
Savannah GA
Landholding Agency: Army
Property Number: 21201120050
Status: Excess
Reasons: Extensive deterioration

Bldg. 08711
Hunter Army Airfield
Savannah GA
Landholding Agency: Army
Property Number: 21201120051
Status: Excess
Reasons: Extensive deterioration

Bldg. 08712
Hunter Army Airfield
Savannah GA
Landholding Agency: Army
Property Number: 21201120052
Status: Excess
Reasons: Extensive deterioration

Bldg. 00TR8, Catoosa Area Trng null
Tunnel Hill GA 30755
Landholding Agency: Army
Property Number: 21201130028
Status: Excess
Reasons: Extensive deterioration

Hawaii

PU–01, 02, 03, 04, 05
Schofield Barracks
Kolekole Pass Road
Wahiawa HI 96786
Landholding Agency: Army
Property Number: 21199014836
Status: Unutilized
Directions:
Comments:
Reasons: Secured Area

PU–06,07,08,09,10,11
Schofield Barracks
Kolekole Pass Road
Wahiawa HI 96786
Landholding Agency: Army
Property Number: 21199014837
Status: Unutilized
Directions:
Comments:
Reasons: Secured Area

71 Tunnels

Aliamanu
Honolulu HI 96818
Landholding Agency: Army
Property Number: 21200440015
Status: Unutilized
Reasons: Other—contamination

10 Tunnels
Aliamanu
Honolulu HI 96818
Landholding Agency: Army
Property Number: 21200440016
Status: Unutilized
Reasons: Other—contamination

49 Tunnels
Aliamanu
Honolulu HI 96818
Landholding Agency: Army
Property Number: 21200440017
Status: Unutilized
Reasons: Other—contamination

Bldgs. 00001 thru 00051
Kipapa Ammor Storage Site
Honolulu HI 96786
Landholding Agency: Army
Property Number: 21200520006
Status: Unutilized
Reasons: Extensive deterioration

Bldgs. 01500 thru 01503
Wheeler Army Airfield
Honolulu HI 96786
Landholding Agency: Army
Property Number: 21200520008
Status: Unutilized
Reasons: Extensive deterioration

10 Bldgs.
Aliamanu
Honolulu HI 96818
Landholding Agency: Army
Property Number: 21200620005
Status: Unutilized
Directions: 9, A0043, A0044, C0001, C0002, C0003, C0004, C0005, C0029, E0027
Reasons: Secured Area

Bldgs. 1124, 1125
Schofield Barracks
Wahiawa HI 96786
Landholding Agency: Army
Property Number: 21200620009
Status: Unutilized
Reasons: Extensive deterioration

Bldg. 02276
Schofield Barracks
Wahiawa HI 96786
Landholding Agency: Army
Property Number: 21200620010
Status: Unutilized
Reasons: Extensive deterioration

18 Bldgs.
Kipapa Ammo Site
Mililani HI 96786
Landholding Agency: Army
Property Number: 21200620011
Status: Unutilized
Directions: 52 to 54, 24B, 26A, 27A, 28A, 29A, 30A, 31A, A0001, B0002
Reasons: Extensive deterioration

Bldg. 1226
Schofield Barracks
Wahiawa HI 96786
Landholding Agency: Army
Property Number: 21200640022
Status: Unutilized
Reasons: Extensive deterioration

Bldg. 00182
Kalaeloa
Kapolei HI
Landholding Agency: Army
Property Number: 21200640108
Status: Unutilized
Reasons: Extensive deterioration

Bldg. 00537
Kalaeloa
Kapolei HI 96707
Landholding Agency: Army
Property Number: 21200640109
Status: Unutilized
Reasons: Extensive deterioration

Bldgs. 01676, 01677
Kalaeloa
Kapolei HI 96707
Landholding Agency: Army
Property Number: 21200640110
Status: Unutilized
Reasons: Extensive deterioration

Bldgs. 01818, 01875
Kalaeloa
Kapolei HI 96707
Landholding Agency: Army
Property Number: 21200640111
Status: Unutilized
Reasons: Extensive deterioration

Bldg. 01954
Kalaeloa
Kapolei HI 96707
Landholding Agency: Army
Property Number: 21200640112
Status: Unutilized
Reasons: Extensive deterioration

Bldg. 00103
Wheeler AAF
Wahiawa HI 96786
Landholding Agency: Army
Property Number: 21200830012
Status: Excess
Reasons: Extensive deterioration

Bldgs. 00039, 01650
Fort Shafter
Honolulu HI 96858
Landholding Agency: Army
Property Number: 21200940039
Status: Unutilized
Reasons: Extensive deterioration

Bldg. 01007
Wheeler Army Airfield
Honolulu HI 96786
Landholding Agency: Army
Property Number: 21200940040
Status: Unutilized
Reasons: Extensive deterioration

Bldg. 75073
Wheeler Army Airfield
Wahiawa HI 96786
Landholding Agency: Army
Property Number: 21201030011
Status: Unutilized
Reasons: Within airport runway clear zone

Bldg. 1000
Wheeler Army Airfield
Wahiawa HI 96786
Landholding Agency: Army
Property Number: 21201040005
Status: Unutilized
Reasons: Extensive deterioration

6 Bldgs.
Schofield Barracks
Wahiawa HI 96786
Landholding Agency: Army
Property Number: 21201110020
Status: Unutilized
Reasons: Extensive deterioration

Bldg. 01070
Wheeler Army Airfield
Denny Rd
Wahiawa HI 96786
Landholding Agency: Army
Property Number: 21201110021
Status: Unutilized
Directions: Between Denny Rd & wastewater treatment plant on Wheeler Army Airfield
Reasons: Within airport runway clear zone; Extensive deterioration

Bldg. 00024
USA Field Station Kunia
Wahiawa HI 96786
Landholding Agency: Army
Property Number: 21201120006
Status: Unutilized
Directions: Next to warehouse, bldg. 25, SE corner of Kunia parking lot
Reasons: Secured Area; Not accessible by road; Extensive deterioration

Bldg. 224
124 Danis Road
Wahiawa HI 96857
Landholding Agency: Army
Property Number: 21201120101
Status: Unutilized
Reasons: Secured Area; Within airport runway clear zone

Bldgs. 00022 and 00046
Training Area
Pohakulou HI 96720
Landholding Agency: Army
Property Number: 21201130015
Status: Unutilized
Reasons: Extensive deterioration; Secured Area

2 Bldgs.
Schofield Barracks
Wahiawa HI 96786
Landholding Agency: Army
Property Number: 21201130054
Status: Unutilized
Directions: 01187, 01188
Reasons: Extensive deterioration

7 Bldgs.
91–1227 Enterprise Ave
Kalaeloa
Kapolei HI 96707
Landholding Agency: Army
Property Number: 21201140046
Status: Unutilized
Directions: 01676, 01677, 01818, 01875, 01954, 00537, 00182
Reasons: Secured Area; Extensive deterioration

Bldg. 01537
124 Takata Road
Honolulu HI 96819
Landholding Agency: Army
Property Number: 21201140075
Status: Unutilized
Reasons: Extensive deterioration; Secured Area

Idaho

Bldg. 00110
Wilder
Canyon ID 83676
Landholding Agency: Army
Property Number: 21200740134
Status: Unutilized

Reasons: Secured Area; Extensive deterioration

Bldg. 00253
4097 W. Cessna St.
Gowen Field 16A20
Boise ID 83705
Landholding Agency: Army
Property Number: 21201140068
Status: Excess
Reasons: Secured Area; Extensive deterioration

Illinois

Bldgs. T–20, T–21, T–23
Charles Melvin Price Support Center
Granite City IL 62040
Landholding Agency: Army
Property Number: 21199820027
Status: Underutilized
Directions:
Comments:
Reasons: Secured Area; Floodway

Bldg. T–105
Charles Melvin Price Support Center
Granite City IL 62040
Landholding Agency: Army
Property Number: 21199930042
Status: Unutilized
GSA Number:
Reasons: Floodway; Secured Area; Within 2000 ft. of flammable or explosive material

Bldg. T–108
Charles Melvin Price Support Center
Granite City IL 62040
Landholding Agency: Army
Property Number: 21199930043
Status: Unutilized
GSA Number:
Reasons: Secured Area; Floodway; Within 2000 ft. of flammable or explosive material

Bldg. T–113
Charles Melvin Price Support Center
Granite City IL 62040
Landholding Agency: Army
Property Number: 21199930044
Status: Unutilized
GSA Number:
Reasons: Within 2000 ft. of flammable or explosive material; Floodway; Secured Area; Extensive deterioration

Bldg. T–401
Charles Melvin Price Support Center
Granite City IL 62040
Landholding Agency: Army
Property Number: 21199930045
Status: Unutilized
GSA Number:
Reasons: Within 2000 ft. of flammable or explosive material; Secured Area; Floodway

Bldg. T–402
Charles Melvin Price Support Center
Granite City IL 62040
Landholding Agency: Army
Property Number: 21199930046
Status: Unutilized
GSA Number:
Reasons: Secured Area; Within 2000 ft. of flammable or explosive material; Floodway

Bldg. T–404
Charles Melvin Price Support Center
Granite City IL 62040
Landholding Agency: Army
Property Number: 21199930047
Status: Unutilized
GSA Number:
Reasons: Secured Area; Floodway; Within 2000 ft. of flammable or explosive material

Bldg. T–413
Charles Melvin Price Support Center
Granite City IL 62040
Landholding Agency: Army
Property Number: 21199930048
Status: Unutilized
GSA Number:
Reasons: Floodway; Secured Area; Within 2000 ft. of flammable or explosive material

Bldg. T–416
Charles Melvin Price Support Center
Granite City IL 62040
Landholding Agency: Army
Property Number: 21199930049
Status: Unutilized
GSA Number:
Reasons: Floodway; Secured Area; Within 2000 ft. of flammable or explosive material

Bldg. S–434
Charles Melvin Price Support Center
Granite City IL 62040
Landholding Agency: Army
Property Number: 21199930050
Status: Unutilized
GSA Number:
Reasons: Secured Area; Floodway; Within 2000 ft. of flammable or explosive material

Bldg. S–593
Charles Melvin Price Support Center
Granite City IL 62040
Landholding Agency: Army
Property Number: 21199930051
Status: Unutilized
GSA Number:
Reasons: Floodway; Secured Area

Bldg. S–594
Charles Melvin Price Support Center
Granite City IL 62040
Landholding Agency: Army
Property Number: 21199930052
Status: Unutilized
GSA Number:
Reasons: Floodway; Secured Area

Bldg. S–595
Charles Melvin Price Support Center
Granite City IL 62040
Landholding Agency: Army
Property Number: 21199930053
Status: Unutilized
GSA Number:
Reasons: Secured Area; Floodway

Bldg. 313, USAG
1 Rock Island
Rock Island Arsenal
Rock Island IL 61299
Landholding Agency: Army
Property Number: 21201120096
Status: Underutilized
Reasons: Secured Area; Extensive deterioration

Bldg. 649
Philip H. Sheridan Reserve Ctr.
Ft. Sheridan IL
Landholding Agency: Army
Property Number: 21201120107
Status: Unutilized
Reasons: Extensive deterioration

Bldg. 141
COL P. Schulstad USARC
Arlington Heights IL
Landholding Agency: Army
Property Number: 21201120108
Status: Unutilized
Reasons: Extensive deterioration

Bldg. 649
3155 Blackhawk Drive
Fort Sheridan IL 60037
Landholding Agency: Army
Property Number: 21201130018
Status: Unutilized
Reasons: Secured Area; Extensive deterioration

Bldg. 141
Col. P. Schulstad
Arlington Heights IL 60005
Landholding Agency: Army
Property Number: 21201130055
Status: Unutilized
Reasons: Contamination; Secured Area; Extensive deterioration

Bldg. 315
1 Rock Island Arsenal
Rock Island IL 61299
Landholding Agency: Army
Property Number: 21201230055
Status: Unutilized
Directions: Outdoor swimming pool
Comments: Documented deficiences: facility is deteriorated; large cracks in foundation; secured area; no onsite use; relocation is not feasible due to the condition & type of structure
Reasons: Extensive deterioration

Indiana

Bldg. 1417–51
Newport Army Ammunition Plant
Newport IN 47966
Landholding Agency: Army
Property Number: 21199011640
Status: Unutilized
Directions:
Comments:
Reasons: Secured Area

Fuel Station
Atterbury Reserve Forces Training Area
Edinburgh IN 46124–1096
Landholding Agency: Army
Property Number: 21199230030
Status: Unutilized
Directions:
Comments:
Reasons: Extensive deterioration

Post Exchange
Atterbury Reserve Forces Training Area
Edinburgh IN 46124–1096
Landholding Agency: Army
Property Number: 21199230031
Status: Unutilized
Directions:
Comments:
Reasons: Extensive deterioration

Bldg. 481
Jefferson Proving Ground
Madison IN 47250
Landholding Agency: Army
Property Number: 21201020008
Status: Excess
Reasons: Extensive deterioration

Iowa

Bldg. 5B–137–1
Iowa Army Ammunition Plant
Middletown IA 52638
Landholding Agency: Army
Property Number: 21199012605

Status: Unutilized
Directions:
Comments:
Reasons: Secured Area; Within 2000 ft. of flammable or explosive material

Bldg. 5B–137–3
Iowa Army Ammunition Plant
Middletown IA 52638
Landholding Agency: Army
Property Number: 21199012606
Status: Unutilized
Directions:
Comments:
Reasons: Within 2000 ft. of flammable or explosive material; Secured Area

Bldg. 5B–137–2
Iowa Army Ammunition Plant
Middletown IA 52638
Landholding Agency: Army
Property Number: 21199012607
Status: Unutilized
Directions:
Comments:
Reasons: Within 2000 ft. of flammable or explosive material; Secured Area

Bldg. 600–52
Iowa Army Ammunition Plant
Middletown IA 52638
Landholding Agency: Army
Property Number: 21199012609
Status: Unutilized
Directions:
Comments:
Reasons: Within 2000 ft. of flammable or explosive material; Secured Area

Bldg. 6–137–3
Iowa Army Ammunition Plant
Middletown IA 52638
Landholding Agency: Army
Property Number: 21199012611
Status: Unutilized
Directions:
Comments:
Reasons: Within 2000 ft. of flammable or explosive material; Secured Area

Bldg. 30–137–2
Iowa Army Ammunition Plant
Middletown IA 52638
Landholding Agency: Army
Property Number: 21199012613
Status: Unutilized
Directions:
Comments:
Reasons: Within 2000 ft. of flammable or explosive material; Secured Area

Bldg. 1–129
Iowa Army Ammunition Plant
Middletown IA 52638
Landholding Agency: Army
Property Number: 21199012620
Status: Unutilized
Directions:
Comments:
Reasons: Within 2000 ft. of flammable or explosive material; Secured Area

Bldg. 1–115–8
Iowa Army Ammunition Plant
Middletown IA 52638
Landholding Agency: Army
Property Number: 21199012622
Status: Unutilized
Directions:
Comments:
Reasons: Secured Area; Within 2000 ft. of flammable or explosive material

Bldg. 1–78
Iowa Army Ammunition Plant
Middletown IA 52638
Landholding Agency: Army
Property Number: 21199012624
Status: Unutilized
Directions:
Comments:
Reasons: Secured Area; Within 2000 ft. of flammable or explosive material

Bldg. 600–85
Iowa Army Ammunition Plant
Middletown IA
Landholding Agency: Army
Property Number: 21199013706
Status: Unutilized
Directions:
Comments:
Reasons: Secured Area

Bldg. 800–04
Iowa Army Ammunition Plant
Middletown IA
Landholding Agency: Army
Property Number: 21199013707
Status: Unutilized
Directions:
Comments:
Reasons: Secured Area

Bldg. 800–70–2
Iowa Army Ammunition Plant
Middletown IA
Landholding Agency: Army
Property Number: 21199013708
Status: Underutilized
Directions:
Comments:
Reasons: Secured Area

Bldg. 5B–03–3
Iowa Army Ammunition Plant
Middletown IA
Landholding Agency: Army
Property Number: 21199013712
Status: Unutilized
Directions:
Comments:
Reasons: Secured Area

Bldg. 5B–09–1
Iowa Army Ammunition Plant
Middletown IA
Landholding Agency: Army
Property Number: 21199013713
Status: Unutilized
Directions:
Comments:
Reasons: Secured Area

Bldg. 5B–21
Iowa Army Ammunition Plant
Middletown IA
Landholding Agency: Army
Property Number: 21199013714
Status: Unutilized
Directions:
Comments:
Reasons: Secured Area

Bldg. 5B–25
Iowa Army Ammunition Plant
Middletown IA
Landholding Agency: Army
Property Number: 21199013715
Status: Unutilized
Directions:
Comments:
Reasons: Secured Area

Bldg. 5B–26
Iowa Army Ammunition Plant
Middletown IA
Landholding Agency: Army
Property Number: 21199013716
Status: Unutilized
Directions:
Comments:
Reasons: Secured Area

Bldg. 5B–27
Iowa Army Ammunition Plant
Middletown IA
Landholding Agency: Army
Property Number: 21199013717
Status: Unutilized
Directions:
Comments:
Reasons: Secured Area

Bldg. 5B–28
Iowa Army Ammunition Plant
Middletown IA
Landholding Agency: Army
Property Number: 21199013718
Status: Unutilized
Directions:
Comments:
Reasons: Secured Area

Bldg. 5B–29
Iowa Army Ammunition Plant
Middletown IA
Landholding Agency: Army
Property Number: 21199013719
Status: Unutilized
Directions:
Comments:
Reasons: Secured Area

Bldg. 5B–55
Iowa Army Ammunition Plant
Middletown IA
Landholding Agency: Army
Property Number: 21199013720
Status: Unutilized
Directions:
Comments:
Reasons: Secured Area

Bldg. 5B–56
Iowa Army Ammunition Plant
Middletown IA
Landholding Agency: Army
Property Number: 21199013721
Status: Unutilized
Directions:
Comments:
Reasons: Secured Area

Bldg. 6–98
Iowa Army Ammunition Plant
Middletown IA
Landholding Agency: Army
Property Number: 21199013722
Status: Unutilized
Directions:
Comments:
Reasons: Secured Area

Bldg. 6–28
Iowa Army Ammunition Plant
Middletown IA
Landholding Agency: Army
Property Number: 21199013723
Status: Unutilized
Directions:
Comments:
Reasons: Secured Area

Bldg. 6–33
Iowa Army Ammunition Plant
Middletown IA

Landholding Agency: Army
Property Number: 21199013724
Status: Unutilized
Directions:
Comments:
Reasons: Secured Area

Bldg. 6–34
Iowa Army Ammunition Plant
Middletown IA
Landholding Agency: Army
Property Number: 21199013725
Status: Unutilized
Directions:
Comments:
Reasons: Secured Area

Bldg. 6–35
Iowa Army Ammunition Plant
Middletown IA
Landholding Agency: Army
Property Number: 21199013726
Status: Unutilized
Directions:
Comments:
Reasons: Secured Area

Bldg. 6–69–6
Iowa Army Ammunition Plant
Middletown IA
Landholding Agency: Army
Property Number: 21199013727
Status: Unutilized
Directions:
Comments:
Reasons: Secured Area

Bldg. 6–88
Iowa Army Ammunition Plant
Middletown IA
Landholding Agency: Army
Property Number: 21199013728
Status: Unutilized
Directions:
Comments:
Reasons: Secured Area

Bldg. 6–94
Iowa Army Ammunition Plant
Middletown IA
Landholding Agency: Army
Property Number: 21199013729
Status: Unutilized
Directions:
Comments:
Reasons: Secured Area

Bldg. 6–09–1
Iowa Army Ammunition Plant
Middletown IA
Landholding Agency: Army
Property Number: 21199013730
Status: Unutilized
Directions:
Comments:
Reasons: Secured Area

Bldg. 6–11
Iowa Army Ammunition Plant
Middletown IA
Landholding Agency: Army
Property Number: 21199013731
Status: Unutilized
Directions:
Comments:
Reasons: Secured Area

Bldg. 6–18–2
Iowa Army Ammunition Plant
Middletown IA
Landholding Agency: Army
Property Number: 21199013732
Status: Unutilized
Directions:
Comments:
Reasons: Secured Area

Bldg. 1–08–1A
Iowa Army Ammunition Plant
Middletown IA
Landholding Agency: Army
Property Number: 21199013733
Status: Unutilized
Directions:
Comments:
Reasons: Secured Area

Bldg. 1–60
Iowa Army Ammunition Plant
Middletown IA
Landholding Agency: Army
Property Number: 21199013734
Status: Unutilized
Directions:
Comments:
Reasons: Secured Area

Bldg. 1–67–2E
Iowa Army Ammunition Plant
Middletown IA
Landholding Agency: Army
Property Number: 21199013736
Status: Unutilized
Directions:
Comments:
Reasons: Secured Area

Bldg. 1–70
Iowa Army Ammunition Plant
Middletown IA
Landholding Agency: Army
Property Number: 21199013737
Status: Unutilized
Directions:
Comments:
Reasons: Secured Area

Bldg. 1–207–1
Iowa Army Ammunition Plant
Middletown IA
Landholding Agency: Army
Property Number: 21199013738
Status: Unutilized
Directions:
Comments:
Reasons: Secured Area

Bldg. 5A–137–1
Iowa Army Ammunition Plant
Middletown IA 52638
Landholding Agency: Army
Property Number: 21199120172
Status: Unutilized
Directions:
Comments:
Reasons: Secured Area; Within 2000 ft. of flammable or explosive material

Bldg. 5A–137–2
Iowa Army Ammunition Plant
Middletown IA 52638
Landholding Agency: Army
Property Number: 21199120173
Status: Unutilized
Directions:
Comments:
Reasons: Within 2000 ft. of flammable or explosive material; Secured Area

Bldg. 5A–137–3
Iowa Army Ammunition Plant
Middletown IA 52638
Landholding Agency: Army
Property Number: 21199120174
Status: Unutilized
Directions:
Comments:
Reasons: Secured Area; Within 2000 ft. of flammable or explosive material

Bldg. 1021
Iowa Army Ammunition Plant
Middletown IA 52638
Landholding Agency: Army
Property Number: 21199230024
Status: Unutilized
Directions:
Comments:
Reasons: Extensive deterioration

Bldg. 6–09–2
Iowa Army Ammunition Plant
Middletown IA 52638
Landholding Agency: Army
Property Number: 21199310017
Status: Excess
Directions:
Comments:
Reasons: Extensive deterioration

Bldg. A218
Iowa Army Ammunition Plant
Middletown IA 52638
Landholding Agency: Army
Property Number: 21199440112
Status: Excess
Directions:
Comments:
Reasons: Within 2000 ft. of flammable or explosive material

Bldg. 219
Iowa Army Ammunition Plant
Middletown IA 52638
Landholding Agency: Army
Property Number: 21199440113
Status: Excess
Directions:
Comments:
Reasons: Within 2000 ft. of flammable or explosive material

Bldg. 220
Iowa Army Ammunition Plant
Middletown IA 52638
Landholding Agency: Army
Property Number: 21199440114
Status: Excess
Directions:
Comments:
Reasons: Within 2000 ft. of flammable or explosive material

Bldg. 221
Iowa Army Ammunition Plant
Middletown IA 52638
Landholding Agency: Army
Property Number: 21199440115
Status: Unutilized
Directions:
Comments:
Reasons: Within 2000 ft. of flammable or explosive material

Bldg. 222
Iowa Army Ammunition Plant
Middletown IA 52638
Landholding Agency: Army
Property Number: 21199440116
Status: Excess
Directions:
Comments:
Reasons: Within 2000 ft. of flammable or explosive material

Bldg. 223

Iowa Army Ammunition Plant
Middletown IA 52638
Landholding Agency: Army
Property Number: 21199440117
Status: Excess
Directions:
Comments:
Reasons: Within 2000 ft. of flammable or explosive material

Bldg. 224
Iowa Army Ammunition Plant
Middletown IA 52638
Landholding Agency: Army
Property Number: 21199440118
Status: Excess
Directions:
Comments:
Reasons: Within 2000 ft. of flammable or explosive material

Bldg. 225
Iowa Army Ammunition Plant
Middletown IA 52638
Landholding Agency: Army
Property Number: 21199440119
Status: Excess
Directions:
Comments:
Reasons: Within 2000 ft. of flammable or explosive material

Bldg. 226
Iowa Army Ammunition Plant
Middletown IA 52638
Landholding Agency: Army
Property Number: 21199440120
Status: Excess
Directions:
Comments:
Reasons: Within 2000 ft. of flammable or explosive material

Bldg. 227
Iowa Army Ammunition Plant
Middletown IA 52638
Landholding Agency: Army
Property Number: 21199440121
Status: Excess
Directions:
Comments:
Reasons: Within 2000 ft. of flammable or explosive material

Bldg. 228
Iowa Army Ammunition Plant
Middletown IA 52638
Landholding Agency: Army
Property Number: 21199440122
Status: Excess
Directions:
Comments:
Reasons: Within 2000 ft. of flammable or explosive material

Bldg. 230
Iowa Army Ammunition Plant
Middletown IA 52638
Landholding Agency: Army
Property Number: 21199440123
Status: Excess
Directions:
Comments:
Reasons: Within 2000 ft. of flammable or explosive material

Bldg. 231
Iowa Army Ammunition Plant
Middletown IA 52638
Landholding Agency: Army
Property Number: 21199440124
Status: Excess
Directions:
Comments:
Reasons: Within 2000 ft. of flammable or explosive material

Bldg. CO231
Iowa Army Ammunition Plant
Middletown IA 52638
Landholding Agency: Army
Property Number: 21199440125
Status: Excess
Directions:
Comments:
Reasons: Within 2000 ft. of flammable or explosive material

Bldg. 232
Iowa Army Ammunition Plant
Middletown IA 52638
Landholding Agency: Army
Property Number: 21199440126
Status: Excess
Directions:
Comments:
Reasons: Within 2000 ft. of flammable or explosive material

Bldg. 233
Iowa Army Ammunition Plant
Middletown IA 52638
Landholding Agency: Army
Property Number: 21199440127
Status: Excess
Directions:
Comments:
Reasons: Within 2000 ft. of flammable or explosive material

Bldg. 234
Iowa Army Ammunition Plant
Middletown IA 52638
Landholding Agency: Army
Property Number: 21199440128
Status: Excess
Directions:
Comments:
Reasons: Within 2000 ft. of flammable or explosive material

Bldg. 235
Iowa Army Ammunition Plant
Middletown IA 52638
Landholding Agency: Army
Property Number: 21199440129
Status: Excess
Directions:
Comments:
Reasons: Within 2000 ft. of flammable or explosive material

Bldg. 236
Iowa Army Ammunition Plant
Middletown IA 52638
Landholding Agency: Army
Property Number: 21199440130
Status: Excess
Directions:
Comments:
Reasons: Within 2000 ft. of flammable or explosive material

Bldgs. 238–256
Iowa Army Ammunition Plant
Middletown IA 52638
Landholding Agency: Army
Property Number: 21199440131
Status: Excess
Directions:
Comments:
Reasons: Within 2000 ft. of flammable or explosive material

Bldg. 258
Iowa Army Ammunition Plant
Middletown IA 52638
Landholding Agency: Army
Property Number: 21199440132
Status: Excess
Directions:
Comments:
Reasons: Within 2000 ft. of flammable or explosive material

Bldg. 259
Iowa Army Ammunition Plant
Middletown IA 52638
Landholding Agency: Army
Property Number: 21199440133
Status: Excess
Directions:
Comments:
Reasons: Within 2000 ft. of flammable or explosive material

Bldg. A0260
Iowa Army Ammunition Plant
Middletown IA 52638
Landholding Agency: Army
Property Number: 21199440134
Status: Excess
Directions:
Comments:
Reasons: Within 2000 ft. of flammable or explosive material

Bldgs. 261–263
Iowa Army Ammunition Plant
Middletown IA 52638
Landholding Agency: Army
Property Number: 21199440135
Status: Excess
Directions:
Comments:
Reasons: Within 2000 ft. of flammable or explosive material

Bldgs. 264–266
Iowa Army Ammunition Plant
Middletown IA 52638
Landholding Agency: Army
Property Number: 21199440136
Status: Excess
Directions:
Comments:
Reasons: Within 2000 ft. of flammable or explosive material

Bldg. 267
Iowa Army Ammunition Plant
Middletown IA 52638
Landholding Agency: Army
Property Number: 21199440137
Status: Excess
Directions:
Comments:
Reasons: Within 2000 ft. of flammable or explosive material

Bldg. 276
Iowa Army Ammunition Plant
Middletown IA 52638
Landholding Agency: Army
Property Number: 21199440138
Status: Excess
Directions:
Comments:
Reasons: Within 2000 ft. of flammable or explosive material

Bldg. 280
Iowa Army Ammunition Plant
Middletown IA 52638
Landholding Agency: Army
Property Number: 21199440139
Status: Excess

Directions:
Comments:
Reasons: Within 2000 ft. of flammable or explosive material

Bldg. 284
Iowa Army Ammunition Plant
Middletown IA 52638
Landholding Agency: Army
Property Number: 21199440140
Status: Excess
Directions:
Comments:
Reasons: Within 2000 ft. of flammable or explosive material

Bldg. 285
Iowa Army Ammunition Plant
Middletown IA 52638
Landholding Agency: Army
Property Number: 21199440141
Status: Excess
Directions:
Comments:
Reasons: Within 2000 ft. of flammable or explosive material

Bldg. 312
Iowa Army Ammunition Plant
Middletown IA 52638
Landholding Agency: Army
Property Number: 21199440142
Status: Excess
Directions:
Comments:
Reasons: Within 2000 ft. of flammable or explosive material

Bldg. 313
Iowa Army Ammunition Plant
Middletown IA 52638
Landholding Agency: Army
Property Number: 21199440143
Status: Excess
Directions:
Comments:
Reasons: Within 2000 ft. of flammable or explosive material

Bldg. 317
Iowa Army Ammunition Plant
Middletown IA 52638
Landholding Agency: Army
Property Number: 21199440144
Status: Excess
Directions:
Comments:
Reasons: Within 2000 ft. of flammable or explosive material

Bldg. 743
Iowa Army Ammunition Plant
Middletown IA 52638
Landholding Agency: Army
Property Number: 21199440145
Status: Excess
Directions:
Comments:
Reasons: Within 2000 ft. of flammable or explosive material

Bldg. 745
Iowa Army Ammunition Plant
Middletown IA 52638
Landholding Agency: Army
Property Number: 21199440146
Status: Excess
Directions:
Comments:
Reasons: Within 2000 ft. of flammable or explosive material

Bldgs. 973–990
Iowa Army Ammunition Plant
Middletown IA 52638
Landholding Agency: Army
Property Number: 21199440147
Status: Excess
Directions:
Comments:
Reasons: Within 2000 ft. of flammable or explosive material

Bldg. 992
Iowa Army Ammunition Plant
Middletown IA 52638
Landholding Agency: Army
Property Number: 21199440148
Status: Excess
Directions:
Comments:
Reasons: Within 2000 ft. of flammable or explosive material

Bldgs. 994–995
Iowa Army Ammunition Plant
Middletown IA 52638
Landholding Agency: Army
Property Number: 21199440149
Status: Excess
Directions:
Comments:
Reasons: Within 2000 ft. of flammable or explosive material

Bldgs. 998–1005
Iowa Army Ammunition Plant
Middletown IA 52638
Landholding Agency: Army
Property Number: 21199440150
Status: Excess
Directions:
Comments:
Reasons: Within 2000 ft. of flammable or explosive material

Bldg. 1008
Iowa Army Ammunition Plant
Middletown IA 52638
Landholding Agency: Army
Property Number: 21199440151
Status: Excess
Directions:
Comments:
Reasons: Within 2000 ft. of flammable or explosive material

Bldgs. 1010–1018
Iowa Army Ammunition Plant
Middletown IA 52638
Landholding Agency: Army
Property Number: 21199440152
Status: Excess
Directions:
Comments:
Reasons: Within 2000 ft. of flammable or explosive material

Bldg. A1018
Iowa Army Ammunition Plant
Middletown IA 52638
Landholding Agency: Army
Property Number: 21199440153
Status: Excess
Directions:
Comments:
Reasons: Within 2000 ft. of flammable or explosive material

Bldg. 1040
Iowa Army Ammunition Plant
Middletown IA 52638
Landholding Agency: Army
Property Number: 21199440154
Status: Excess
Directions:
Comments:
Reasons: Within 2000 ft. of flammable or explosive material

Bldg. 1064
Iowa Army Ammunition Plant
Middletown IA 52638
Landholding Agency: Army
Property Number: 21199440155
Status: Excess
Directions:
Comments:
Reasons: Within 2000 ft. of flammable or explosive material

Bldgs. 1076–1077
Iowa Army Ammunition Plant
Middletown IA 52638
Landholding Agency: Army
Property Number: 21199440156
Status: Excess
Directions:
Comments:
Reasons: Within 2000 ft. of flammable or explosive material

Bldg. 1088
Iowa Army Ammunition Plant
Middletown IA 52638
Landholding Agency: Army
Property Number: 21199440157
Status: Excess
Directions:
Comments:
Reasons: Within 2000 ft. of flammable or explosive material

Bldg. 5390
Iowa Army Ammunition Plant
Middletown IA 52638
Landholding Agency: Army
Property Number: 21199440158
Status: Excess
Directions:
Comments:
Reasons: Within 2000 ft. of flammable or explosive material

Bldgs. 27, 340
Iowa Army Ammunition Plant
Middletown IA 52638
Landholding Agency: Army
Property Number: 21199520002
Status: Unutilized
Directions:
Comments:
Reasons: Within 2000 ft. of flammable or explosive material

Bldg. 237
Iowa Army Ammunition Plant
Middletown IA 52638
Landholding Agency: Army
Property Number: 21199520070
Status: Surplus
Directions:
Comments:
Reasons: Within 2000 ft. of flammable or explosive material

Bldg. 500–128
Iowa Army Ammunition Plant
Middletown IA 52638
Landholding Agency: Army
Property Number: 21199740027
Status: Unutilized
Directions:
Comments:
Reasons: Secured Area

Bldg. 01075

Iowa AAP
Middletown IA 52638
Landholding Agency: Army
Property Number: 21200220022
Status: Underutilized
GSA Number:
Reasons: Extensive deterioration; Within 2000 ft. of flammable or explosive material

Bldg. 00310
Iowa AAP
Middletown IA 52638
Landholding Agency: Army
Property Number: 21200230019
Status: Unutilized
GSA Number:
Reasons: Secured Area; Within 2000 ft. of flammable or explosive material

Bldg. 00887
Iowa AAP
Middletown IA 52638
Landholding Agency: Army
Property Number: 21200230020
Status: Unutilized
GSA Number:
Reasons: Within 2000 ft. of flammable or explosive material; Secured Area

Bldgs. 00912, 00913
Iowa AAP
Middletown IA 52638
Landholding Agency: Army
Property Number: 21200230021
Status: Unutilized
GSA Number:
Reasons: Secured Area; Within 2000 ft. of flammable or explosive material

Bldg. 01041
Iowa AAP
Middletown IA 52638
Landholding Agency: Army
Property Number: 21200230022
Status: Unutilized
GSA Number:
Reasons: Within 2000 ft. of flammable or explosive material; Secured Area

Bldg. 01059
Iowa AAP
Middletown IA 52638
Landholding Agency: Army
Property Number: 21200230023
Status: Unutilized
GSA Number:
Reasons: Within 2000 ft. of flammable or explosive material; Secured Area

Bldg. 00765
Iowa Army Ammo Plant
Middletown IA 52638
Landholding Agency: Army
Property Number: 21200330012
Status: Unutilized
GSA Number:
Reasons: Within 2000 ft. of flammable or explosive material; Secured Area

Bldg. 05274
Iowa Army Ammo Plant
Middletown IA 52638
Landholding Agency: Army
Property Number: 21200330013
Status: Unutilized
GSA Number:
Reasons: Secured Area; Within 2000 ft. of flammable or explosive material

Bldg. 05325
Iowa Army Ammo Plant
Middletown IA 52638
Landholding Agency: Army
Property Number: 21200330014
Status: Unutilized
GSA Number:
Reasons: Within 2000 ft. of flammable or explosive material; Secured Area

Bldgs. 00152, 00895
Iowa Army Ammo Plant
Middletown IA 52638
Landholding Agency: Army
Property Number: 21200340017
Status: Unutilized
GSA Number:
Reasons: Secured Area; Within 2000 ft. of flammable or explosive material

Bldg. 01073
Iowa Army Ammo Plant
Middletown IA 52638
Landholding Agency: Army
Property Number: 21200420083
Status: Unutilized
Reasons: Secured Area

Bldgs. 01072, 01074
Iowa AAP
Middletown IA 52638
Landholding Agency: Army
Property Number: 21200430018
Status: Unutilized
Reasons: Secured Area

Bldgs. 00677, 00671
Iowa Army Ammo Plant
Middletown IA 52601
Landholding Agency: Army
Property Number: 21200440018
Status: Excess
Reasons: Secured Area

Facility 00844
Iowa Army Ammo Plant
Middletown IA 52638
Landholding Agency: Army
Property Number: 21200510004
Status: Excess
Reasons: Extensive deterioration

Facilities 01025, 01026
Iowa Army Ammo Plant
Middletown IA 52638
Landholding Agency: Army
Property Number: 21200510006
Status: Excess
Reasons: Extensive deterioration

3 Buildings
Iowa Army Ammo Plant
00036, 00816, 01067
Middletown IA 52601
Landholding Agency: Army
Property Number: 21200520009
Status: Unutilized
Reasons: Extensive deterioration; Within 2000 ft. of flammable or explosive material; Secured Area

Bldg. 00700
Iowa Army Ammo Plant
Middletown IA 52601
Landholding Agency: Army
Property Number: 21200540038
Status: Unutilized
Reasons: Within 2000 ft. of flammable or explosive material; Extensive deterioration

Bldgs. 01091, 01092
Iowa Army Ammo Plant
Middletown IA 52601
Landholding Agency: Army
Property Number: 21200540039
Status: Unutilized
Reasons: Extensive deterioration; Within 2000 ft. of flammable or explosive material

Bldg. 01039
Iowa Army Ammo Plant
Middletown IA 52601
Landholding Agency: Army
Property Number: 21200620012
Status: Unutilized
Reasons: Within 2000 ft. of flammable or explosive material; Secured Area

Bldg. 00344
Iowa AAP
Middletown IA 52601
Landholding Agency: Army
Property Number: 21200710020
Status: Unutilized
Reasons: Secured Area; Within 2000 ft. of flammable or explosive material

4 Bldgs.
Iowa AAP
Middletown IA 52601
Landholding Agency: Army
Property Number: 21200710021
Status: Unutilized
Directions: 00903, 00993, 00996, 00997
Reasons: Within 2000 ft. of flammable or explosive material; Secured Area

4 Bldgs.
Iowa AAP
01000, 01006, 01007, 01009
Middletown IA 52601
Landholding Agency: Army
Property Number: 21200710022
Status: Unutilized
Reasons: Within 2000 ft. of flammable or explosive material; Secured Area

Bldg. 01063
Iowa AAP
Middletown IA 52601
Landholding Agency: Army
Property Number: 21200710023
Status: Unutilized
Reasons: Secured Area; Within 2000 ft. of flammable or explosive material

Bldg. 05366
Iowa AAP
Middletown IA 52601
Landholding Agency: Army
Property Number: 21200710024
Status: Unutilized
Reasons: Secured Area; Within 2000 ft. of flammable or explosive material

9 Bldgs.
Iowa Army Ammo Plant
Middletown IA 52601
Landholding Agency: Army
Property Number: 21200740126
Status: Unutilized
Directions: 00176, 00204, B0205, C0205, 00206, 00207, 00208, 00209, 00210
Reasons: Secured Area; Within 2000 ft. of flammable or explosive material

6 Bldgs.
Iowa Army Ammo Plant
Middletown IA 52601
Landholding Agency: Army
Property Number: 21200740127
Status: Unutilized
Directions: 00211, 00212, 00213, 00217, 00218, C0218
Reasons: Within 2000 ft. of flammable or explosive material; Secured Area

13 Bldgs.
Iowa Army Ammo Plant

Middletown IA 52601
Landholding Agency: Army
Property Number: 21200740128
Status: Unutilized
Directions: 00287, 00288, 00289, 00290, A0290, 00291, 00292, 00293, A0293, B0293, C0293, D0293, E0293
Reasons: Secured Area; Within 2000 ft. of flammable or explosive material

8 Bldgs.
Iowa Army Ammo Plant
Middletown IA 52601
Landholding Agency: Army
Property Number: 21200740129
Status: Unutilized
Directions: A0294, 00295, 00296, 00316, 00326, 00328, 00330 00341
Reasons: Within 2000 ft. of flammable or explosive material; Secured Area

11 Bldgs.
Iowa Army Ammo Plant
Middletown IA 52601
Landholding Agency: Army
Property Number: 21200740130
Status: Unutilized
Directions: 00949, 00962, 00963, 00964, 00965, 00967, 00968, 00969, 00970, 00971, 00972
Reasons: Within 2000 ft. of flammable or explosive material; Secured Area

9 Bldgs.
Iowa Army Ammo Plant
Middletown IA 52601
Landholding Agency: Army
Property Number: 21200740131
Status: Unutilized
Directions: 01028, 01029, 01030, 01031, 01032, 01033, 01035, 01036, 01037
Reasons: Within 2000 ft. of flammable or explosive material; Secured Area

7 Bldgs.
Iowa Army Ammo Plant
Middletown IA 52601
Landholding Agency: Army
Property Number: 21200740132
Status: Unutilized
Directions: 01038, B1038, C1038, D1038, E1038, 01042, 01043
Reasons: Within 2000 ft. of flammable or explosive material; Secured Area

Bldgs. A1057, 01090, 05334
Iowa Army Ammo Plant
Middletown IA 52601
Landholding Agency: Army
Property Number: 21200740133
Status: Unutilized
Reasons: Secured Area; Within 2000 ft. of flammable or explosive material

Bldgs. 00013, C0847
Iowa Army Ammo Plant
Middletown IA 52601
Landholding Agency: Army
Property Number: 21200810008
Status: Unutilized
Reasons: Secured Area; Within 2000 ft. of flammable or explosive material

Bldgs. TD010, TD020
Camp Dodge
Johnson IA 50131
Landholding Agency: Army
Property Number: 21200920036
Status: Excess
Reasons: Extensive deterioration

Bldgs. A0190, 00190, 01069
Iowa AAP
Middletown IA 52601
Landholding Agency: Army
Property Number: 21201040007
Status: Unutilized
Reasons: Secured Area; Within 2000 ft. of flammable or explosive material; Extensive deterioration

Bldg. 01110, Iowa Army Ammo
17575 State Highway 79
Middletown IA 52601
Landholding Agency: Army
Property Number: 21201120005
Status: Unutilized
Reasons: Extensive deterioration; Not accessible by road; Secured Area; Within 2000 ft. of flammable or explosive material

10 Buildings
Iowa Army Ammunition Plant
Middletown IA 52638
Landholding Agency: Army
Property Number: 21201230019
Status: Underutilized
Directions: 620, 626, 641, 642, 643, 644, 645, 646, 647, 5207
Comments: Public access denied & no alternative method to gain access w/out compromising nat'l security
Reasons: Secured Area

Kansas

Bldg. 3013 KAAP
Kansas Army Ammunition Plant
Production Area
Parsons KS 67357
Landholding Agency: Army
Property Number: 21199011909
Status: Unutilized
Directions:
Comments:
Reasons: Secured Area

Bldg. 1010 KAAP
Kansas Army Ammunition Plant
Production Area
Parsons KS 67357
Landholding Agency: Army
Property Number: 21199011910
Status: Unutilized
Directions:
Comments:
Reasons: Secured Area

Bldg. 1066 KAAP
Kansas Army Ammunition Plant
Production Area
Parsons KS 67357
Landholding Agency: Army
Property Number: 21199011911
Status: Unutilized
Directions:
Comments:
Reasons: Secured Area

Bldg. 507 KAAP
Kansas Army Ammunition Plant
Production Area
Parsons KS 67357
Landholding Agency: Army
Property Number: 21199011912
Status: Unutilized
Directions:
Comments:
Reasons: Secured Area; Within 2000 ft. of flammable or explosive material

Bldg. 502 KAAP
Kansas Army Ammunition Plant
Production Area
Parsons KS 67357
Landholding Agency: Army
Property Number: 21199011913
Status: Unutilized
Directions:
Comments:
Reasons: Within 2000 ft. of flammable or explosive material; Secured Area

Bldg. 506 KAAP
Kansas Army Ammunition Plant
Production Area
Parsons KS 67357
Landholding Agency: Army
Property Number: 21199011914
Status: Unutilized
Directions:
Comments:
Reasons: Within 2000 ft. of flammable or explosive material; Secured Area

Bldg. 805 KAAP
Kansas Army Ammunition Plant
Production Area
Parsons KS 67357
Landholding Agency: Army
Property Number: 21199011915
Status: Unutilized
Directions:
Comments:
Reasons: Within 2000 ft. of flammable or explosive material; Secured Area

Bldg. 810 KAAP
Kansas Army Ammunition Plant
Production Area
Parsons KS 67357
Landholding Agency: Army
Property Number: 21199011916
Status: Unutilized
Directions:
Comments:
Reasons: Within 2000 ft. of flammable or explosive material; Secured Area

Bldg. 811 KAAP
Kansas Army Ammunition Plant
Production Area
Parsons KS 67357
Landholding Agency: Army
Property Number: 21199011917
Status: Unutilized
Directions:
Comments:
Reasons: Within 2000 ft. of flammable or explosive material; Secured Area

Bldg. 1013 KAAP
Kansas Army Ammunition Plant
Production Area
Parsons KS 67357
Landholding Agency: Army
Property Number: 21199011918
Status: Unutilized
Directions:
Comments:
Reasons: Within 2000 ft. of flammable or explosive material; Secured Area

Bldg. 806 KAAP
Kansas Army Ammunition Plant
Production Area
Parsons KS 67357
Landholding Agency: Army
Property Number: 21199011919
Status: Unutilized
Directions:
Comments:
Reasons: Secured Area; Within 2000 ft. of flammable or explosive material

Bldg. 807 KAAP

Kansas Army Ammunition Plant
Production Area
Parsons KS 67357
Landholding Agency: Army
Property Number: 21199011920
Status: Unutilized
Directions:
Comments:
Reasons: Secured Area; Within 2000 ft. of flammable or explosive material

Bldg. 914 KAAP
Kansas Army Ammunition Plant
Production Area
Parsons KS 67357
Landholding Agency: Army
Property Number: 21199011921
Status: Unutilized
Directions:
Comments:
Reasons: Within 2000 ft. of flammable or explosive material; Secured Area

Bldg. 926 KAAP
Kansas Army Ammunition Plant
Production Area
Parsons KS 67357
Landholding Agency: Army
Property Number: 21199011922
Status: Unutilized
Directions:
Comments:
Reasons: Secured Area; Within 2000 ft. of flammable or explosive material

Bldg. 1021 KAAP
Kansas Army Ammunition Plant
Production Area
Parsons KS 67357
Landholding Agency: Army
Property Number: 21199011923
Status: Unutilized
Directions:
Comments:
Reasons: Within 2000 ft. of flammable or explosive material; Secured Area

Bldg. 1078 KAAP
Kansas Army Ammunition Plant
Production Area
Parsons KS 67357
Landholding Agency: Army
Property Number: 21199011924
Status: Unutilized
Directions:
Comments:
Reasons: Secured Area; Within 2000 ft. of flammable or explosive material

Bldg. 540 KAAP
Kansas Army Ammunition Plant
Production Area
Parsons KS 67357
Landholding Agency: Army
Property Number: 21199011925
Status: Unutilized
Directions:
Comments:
Reasons: Secured Area; Within 2000 ft. of flammable or explosive material

Bldg. 541 KAAP
Kansas Army Ammunition Plant
Production Area
Parsons KS 67357
Landholding Agency: Army
Property Number: 21199011926
Status: Unutilized
Directions:
Comments:
Reasons: Within 2000 ft. of flammable or explosive material; Secured Area

Bldg. 922 KAAP
Kansas Army Ammunition Plant
Production Area
Parsons KS 67357
Landholding Agency: Army
Property Number: 21199011927
Status: Unutilized
Directions:
Comments:
Reasons: Within 2000 ft. of flammable or explosive material; Secured Area

Bldg. 925 KAAP
Kansas Army Ammunition Plant
Production Area
Parsons KS 67357
Landholding Agency: Army
Property Number: 21199011928
Status: Unutilized
Directions:
Comments:
Reasons: Secured Area; Within 2000 ft. of flammable or explosive material

Bldg. 928 KAAP
Kansas Army Ammunition Plant
Production Area
Parsons KS 67357
Landholding Agency: Army
Property Number: 21199011929
Status: Unutilized
Directions:
Comments:
Reasons: Within 2000 ft. of flammable or explosive material; Secured Area

Bldg. 985 KAAP
Kansas Army Ammunition Plant
Production Area
Parsons KS 67357
Landholding Agency: Army
Property Number: 21199011930
Status: Unutilized
Directions:
Comments:
Reasons: Within 2000 ft. of flammable or explosive material; Secured Area

Bldg. 1096 KAAP
Kansas Army Ammunition Plant
Production Area
Parsons KS 67357
Landholding Agency: Army
Property Number: 21199011931
Status: Unutilized
Directions:
Comments:
Reasons: Secured Area; Within 2000 ft. of flammable or explosive material

Bldg. 511 KAAP
Kansas Army Ammunition Plant
Production Area
Parsons KS 67357
Landholding Agency: Army
Property Number: 21199011932
Status: Unutilized
Directions:
Comments:
Reasons: Within 2000 ft. of flammable or explosive material; Secured Area

Bldg. 814 KAAP
Kansas Army Ammunition Plant
Production Area
Parsons KS 67357
Landholding Agency: Army
Property Number: 21199011933
Status: Unutilized
Directions:
Comments:
Reasons: Secured Area; Within 2000 ft. of flammable or explosive material

Bldg. 909 KAAP
Kansas Army Ammunition Plant
Production Area
Parsons KS 67357
Landholding Agency: Army
Property Number: 21199011934
Status: Unutilized
Directions:
Comments:
Reasons: Secured Area; Within 2000 ft. of flammable or explosive material

Bldg. 719 KAAP
Kansas Army Ammunition Plant
Production Area
Parsons KS 67357
Landholding Agency: Army
Property Number: 21199011935
Status: Unutilized
Directions:
Comments:
Reasons: Within 2000 ft. of flammable or explosive material; Secured Area

Bldg. 918 KAAP
Kansas Army Ammunition Plant
Production Area
Parsons KS 67357
Landholding Agency: Army
Property Number: 21199011936
Status: Unutilized
Directions:
Comments:
Reasons: Secured Area; Within 2000 ft. of flammable or explosive material

Bldg. 1014 KAAP
Kansas Army Ammunition Plant
Production Area
Parsons KS 67357
Landholding Agency: Army
Property Number: 21199011937
Status: Unutilized
Directions:
Comments:
Reasons: Within 2000 ft. of flammable or explosive material; Secured Area

Bldg. 1015 KAAP
Kansas Army Ammunition Plant
Production Area
Parsons KS 67357
Landholding Agency: Army
Property Number: 21199011938
Status: Unutilized
Directions:
Comments:
Reasons: Within 2000 ft. of flammable or explosive material; Secured Area

Bldg. 932 KAAP
Kansas Army Ammunition Plant
Production Area
Parsons KS 67357
Landholding Agency: Army
Property Number: 21199011939
Status: Unutilized
Directions:
Comments:
Reasons: Within 2000 ft. of flammable or explosive material; Secured Area

Bldg. 933 KAAP
Kansas Army Ammunition Plant
Production Area
Parsons KS 67357
Landholding Agency: Army
Property Number: 21199011940
Status: Unutilized

Directions:
Comments:
Reasons: Within 2000 ft. of flammable or explosive material; Secured Area

Bldg. 934 KAAP
Kansas Army Ammunition Plant
Production Area
Parsons KS 67357
Landholding Agency: Army
Property Number: 21199011941
Status: Unutilized
Directions:
Comments:
Reasons: Secured Area Within 2000 ft. of flammable or explosive material

Bldg. 809 KAAP
Kansas Army Ammunition Plant
Production Area
Parsons KS 67357
Landholding Agency: Army
Property Number: 21199011942
Status: Unutilized
Directions:
Comments:
Reasons: Within 2000 ft. of flammable or explosive material; Secured Area

Bldg. 816 KAAP
Kansas Army Ammunition Plant
Production Area
Parsons KS 67357
Landholding Agency: Army
Property Number: 21199011943
Status: Unutilized
Directions:
Comments:
Reasons: Secured Area; Within 2000 ft. of flammable or explosive material

Bldg. 3001 KAAP
Kansas Army Ammunition Plant
Production Area
Parsons KS 67357
Landholding Agency: Army
Property Number: 21199011944
Status: Unutilized
Directions:
Comments:
Reasons: Within 2000 ft. of flammable or explosive material; Secured Area

Bldg. 3002 KAAP
Kansas Army Ammunition Plant
Production Area
Parsons KS 67357
Landholding Agency: Army
Property Number: 21199011945
Status: Unutilized
Directions:
Comments:
Reasons: Within 2000 ft. of flammable or explosive material; Secured Area

Building 50
Kansas Army Ammunition Plant
Parsons KS 67357
Landholding Agency: Army
Property Number: 21199620518
Status: Unutilized
Directions:
Comments:
Reasons: Secured Area

Building 112
Kansas Army Ammunition Plant
Parsons KS 67357
Landholding Agency: Army
Property Number: 21199620519
Status: Unutilized
Directions:
Comments:
Reasons: Secured Area

Building 210
Kansas Army Ammunition Plant
Parsons KS 67357
Landholding Agency: Army
Property Number: 21199620520
Status: Unutilized
Directions:
Comments:
Reasons: Secured Area

Buildings 212, 221
Kansas Army Ammunition Plant
Parsons KS 67357
Landholding Agency: Army
Property Number: 21199620521
Status: Unutilized
Directions:
Comments:
Reasons: Secured Area

Building 219
Kansas Army Ammunition Plant
Parsons KS 67357
Landholding Agency: Army
Property Number: 21199620522
Status: Unutilized
Directions:
Comments:
Reasons: Secured Area

Buildings 209, 509, 724, 813
Kansas Army Ammunition Plant
Parsons KS 67357
Landholding Agency: Army
Property Number: 21199620523
Status: Unutilized
Directions: 902, 1002
Comments:
Reasons: Secured Area

Buildings 231, 244
Kansas Army Ammunition Plant
Parsons KS 67357
Landholding Agency: Army
Property Number: 21199620524
Status: Unutilized
Directions:
Comments:
Reasons: Secured Area

Building 246
Kansas Army Ammunition Plant
Parsons KS 67357
Landholding Agency: Army
Property Number: 21199620525
Status: Unutilized
Directions:
Comments:
Reasons: Secured Area

Building 247
Kansas Army Ammunition Plant
Parsons KS 67357
Landholding Agency: Army
Property Number: 21199620526
Status: Unutilized
Directions:
Comments:
Reasons: Secured Area

Building 248, 252
Kansas Army Ammunition Plant
Parsons KS 67357
Landholding Agency: Army
Property Number: 21199620527
Status: Unutilized
Directions:
Comments:
Reasons: Secured Area

Building 302
Kansas Army Ammunition Plant
Parsons KS 67357
Landholding Agency: Army
Property Number: 21199620528
Status: Unutilized
Directions:
Comments:
Reasons: Secured Area

Building 304
Kansas Army Ammunition Plant
Parsons KS 67357
Landholding Agency: Army
Property Number: 21199620529
Status: Unutilized
Directions:
Comments:
Reasons: Secured Area

Building 305
Kansas Army Ammunition Plant
Parsons KS 67357
Landholding Agency: Army
Property Number: 21199620530
Status: Unutilized
Directions:
Comments:
Reasons: Secured Area

Building 306
Kansas Army Ammunition Plant
Parsons KS 67357
Landholding Agency: Army
Property Number: 21199620531
Status: Unutilized
Directions:
Comments:
Reasons: Secured Area

Building 308
Kansas Army Ammunition Plant
Parsons KS 67357
Landholding Agency: Army
Property Number: 21199620532
Status: Unutilized
Directions:
Comments:
Reasons: Secured Area

Building 311
Kansas Army Ammunition Plant
Parsons KS 67357
Landholding Agency: Army
Property Number: 21199620533
Status: Unutilized
Directions:
Comments:
Reasons: Secured Area

Building 312
Kansas Army Ammunition Plant
Parsons KS 67357
Landholding Agency: Army
Property Number: 21199620534
Status: Unutilized
Directions:
Comments:
Reasons: Secured Area

Building 315
Kansas Army Ammunition Plant
Parsons KS 67357
Landholding Agency: Army
Property Number: 21199620535
Status: Unutilized
Directions:
Comments:
Reasons: Secured Area

Building 316
Kansas Army Ammunition Plant

Parsons KS 67357
Landholding Agency: Army
Property Number: 21199620536
Status: Unutilized
Directions:
Comments:
Reasons: Secured Area

Building 321
Kansas Army Ammunition Plant
Parsons KS 67357
Landholding Agency: Army
Property Number: 21199620537
Status: Unutilized
Directions:
Comments:
Reasons: Secured Area

Building 322
Kansas Army Ammunition Plant
Parsons KS 67357
Landholding Agency: Army
Property Number: 21199620538
Status: Unutilized
Directions:
Comments:
Reasons: Secured Area

Building 324
Kansas Army Ammunition Plant
Parsons KS 67357
Landholding Agency: Army
Property Number: 21199620539
Status: Unutilized
Directions:
Comments:
Reasons: Secured Area

Building 325
Kansas Army Ammunition Plant
Parsons KS 67357
Landholding Agency: Army
Property Number: 21199620540
Status: Unutilized
Directions:
Comments:
Reasons: Secured Area

Building 326
Kansas Army Ammunition Plant
Parsons KS 67357
Landholding Agency: Army
Property Number: 21199620541
Status: Unutilized
Directions:
Comments:
Reasons: Secured Area

Building 327
Kansas Army Ammunition Plant
Parsons KS 67357
Landholding Agency: Army
Property Number: 21199620542
Status: Unutilized
Directions:
Comments:
Reasons: Secured Area

Building 328
Kansas Army Ammunition Plant
Parsons KS 67357
Landholding Agency: Army
Property Number: 21199620543
Status: Unutilized
Directions:
Comments:
Reasons: Secured Area

Buildings 329, 516, 746, 819
Kansas Army Ammunition Plant
Parsons KS 67357
Landholding Agency: Army
Property Number: 21199620544
Status: Unutilized
Directions: 936, 931, 939, 941, 943, 1026, 1029, 1031, 1034, 1099, 1232, 1558, 1626, 1723, 1830, 1991
Comments:
Reasons: Secured Area

Building 503
Kansas Army Ammunition Plant
Parsons KS 67357
Landholding Agency: Army
Property Number: 21199620545
Status: Unutilized
Directions:
Comments:
Reasons: Secured Area

Buildings 504, 512
Kansas Army Ammunition Plant
Parsons KS 67357
Landholding Agency: Army
Property Number: 21199620546
Status: Unutilized
Directions:
Comments:
Reasons: Secured Area

Building 505
Kansas Army Ammunition Plant
Parsons KS 67357
Landholding Agency: Army
Property Number: 21199620547
Status: Unutilized
Directions:
Comments:
Reasons: Secured Area

Building 513
Kansas Army Ammunition Plant
Parsons KS 67357
Landholding Agency: Army
Property Number: 21199620548
Status: Unutilized
Directions:
Comments:
Reasons: Secured Area

Building 515
Kansas Army Ammunition Plant
Parsons KS 67357
Landholding Agency: Army
Property Number: 21199620549
Status: Unutilized
Directions:
Comments:
Reasons: Secured Area

Building 701
Kansas Army Ammunition Plant
Parsons KS 67357
Landholding Agency: Army
Property Number: 21199620550
Status: Unutilized
Directions:
Comments:
Reasons: Secured Area

Buildings 702, 704, 707, 709
Kansas Army Ammunition Plant
Parsons KS 67357
Landholding Agency: Army
Property Number: 21199620551
Status: Unutilized
Directions: 711, 712, 727, 729, 735, 737, 738, 742, 743, 747
Comments:
Reasons: Secured Area

Buildings 703, 708, 710, 713
Kansas Army Ammunition Plant
Parsons KS 67357
Landholding Agency: Army
Property Number: 21199620552
Status: Unutilized
Directions: 720, 721, 728, 730, 731, 732, 734, 736, 739
Comments:
Reasons: Secured Area

Buildings 705, 706
Kansas Army Ammunition Plant
Parsons KS 67357
Landholding Agency: Army
Property Number: 21199620553
Status: Unutilized
Directions:
Comments:
Reasons: Secured Area

Buildings 715, 716, 717
Kansas Army Ammunition Plant
Parsons KS 67357
Landholding Agency: Army
Property Number: 21199620554
Status: Unutilized
Directions:
Comments:
Reasons: Secured Area

Building 722
Kansas Army Ammunition Plant
Parsons KS 67357
Landholding Agency: Army
Property Number: 21199620555
Status: Unutilized
Directions:
Comments:
Reasons: Secured Area

Building 723
Kansas Army Ammunition Plant
Parsons KS 67357
Landholding Agency: Army
Property Number: 21199620556
Status: Unutilized
Directions:
Comments:
Reasons: Secured Area

Building 725
Kansas Army Ammunition Plant
Parsons KS 67357
Landholding Agency: Army
Property Number: 21199620557
Status: Unutilized
Directions:
Comments:
Reasons: Secured Area

Building 726
Kansas Army Ammunition Plant
Parsons KS 67357
Landholding Agency: Army
Property Number: 21199620558
Status: Unutilized
Directions:
Comments:
Reasons: Secured Area

Building 740
Kansas Army Ammunition Plant
Parsons KS 67357
Landholding Agency: Army
Property Number: 21199620559
Status: Unutilized
Directions:
Comments:
Reasons: Secured Area

Building 741
Kansas Army Ammunition Plant
Parsons KS 67357
Landholding Agency: Army

Property Number: 21199620560
Status: Unutilized
Directions:
Comments:
Reasons: Secured Area

Building 744
Kansas Army Ammunition Plant
Parsons KS 67357
Landholding Agency: Army
Property Number: 21199620561
Status: Unutilized
Directions:
Comments:
Reasons: Secured Area

Building 745
Kansas Army Ammunition Plant
Parsons KS 67357
Landholding Agency: Army
Property Number: 21199620562
Status: Unutilized
Directions:
Comments:
Reasons: Secured Area

Building 749
Kansas Army Ammunition Plant
Parsons KS 67357
Landholding Agency: Army
Property Number: 21199620563
Status: Unutilized
Directions:
Comments:
Reasons: Secured Area

Building 750
Kansas Army Ammunition Plant
Parsons KS 67357
Landholding Agency: Army
Property Number: 21199620564
Status: Unutilized
Directions:
Comments:
Reasons: Secured Area

Building 782
Kansas Army Ammunition Plant
Parsons KS 67357
Landholding Agency: Army
Property Number: 21199620565
Status: Unutilized
Directions:
Comments:
Reasons: Secured Area

Buildings 802, 808
Kansas Army Ammunition Plant
Parsons KS 67357
Landholding Agency: Army
Property Number: 21199620566
Status: Unutilized
Directions:
Comments:
Reasons: Secured Area

Buildings 804
Kansas Army Ammunition Plant
Parsons KS 67357
Landholding Agency: Army
Property Number: 21199620567
Status: Unutilized
Directions:
Comments:
Reasons: Secured Area

Building 812
Kansas Army Ammunition Plant
Parsons KS 67357
Landholding Agency: Army
Property Number: 21199620568
Status: Unutilized
Directions:
Comments:
Reasons: Secured Area

Building 818
Kansas Army Ammunition Plant
Parsons KS 67357
Landholding Agency: Army
Property Number: 21199620569
Status: Unutilized
Directions:
Comments:
Reasons: Secured Area

Building 828
Kansas Army Ammunition Plant
Parsons KS 67357
Landholding Agency: Army
Property Number: 21199620570
Status: Unutilized
Directions:
Comments:
Reasons: Secured Area

Building 841
Kansas Army Ammunition Plant
Parsons KS 67357
Landholding Agency: Army
Property Number: 21199620571
Status: Unutilized
Directions:
Comments:
Reasons: Secured Area

Building 901
Kansas Army Ammunition Plant
Parsons KS 67357
Landholding Agency: Army
Property Number: 21199620572
Status: Unutilized
Directions:
Comments:
Reasons: Secured Area

Building 903
Kansas Army Ammunition Plant
Parsons KS 67357
Landholding Agency: Army
Property Number: 21199620573
Status: Unutilized
Directions:
Comments:
Reasons: Secured Area

Building 904
Kansas Army Ammunition Plant
Parsons KS 67357
Landholding Agency: Army
Property Number: 21199620574
Status: Unutilized
Directions:
Comments:
Reasons: Secured Area

Building 905
Kansas Army Ammunition Plant
Parsons KS 67357
Landholding Agency: Army
Property Number: 21199620575
Status: Unutilized
Directions:
Comments:
Reasons: Secured Area

Buildings 906, 908, 911,
Kansas Army Ammunition Plant
Parsons KS 67357
Landholding Agency: Army
Property Number: 21199620576
Status: Unutilized
Directions: 916, 993
Comments:
Reasons: Secured Area

Building 907
Kansas Army Ammunition Plant
Parsons KS 67357
Landholding Agency: Army
Property Number: 21199620577
Status: Unutilized
Directions:
Comments:
Reasons: Secured Area

Building 910
Kansas Army Ammunition Plant
Parsons KS 67357
Landholding Agency: Army
Property Number: 21199620578
Status: Unutilized
Directions:
Comments:
Reasons: Secured Area

Building 912
Kansas Army Ammunition Plant
Parsons KS 67357
Landholding Agency: Army
Property Number: 21199620579
Status: Unutilized
Directions:
Comments:
Reasons: Secured Area

Building 913
Kansas Army Ammunition Plant
Parsons KS 67357
Landholding Agency: Army
Property Number: 21199620580
Status: Unutilized
Directions:
Comments:
Reasons: Secured Area

Building 915
Kansas Army Ammunition Plant
Parsons KS 67357
Landholding Agency: Army
Property Number: 21199620581
Status: Unutilized
Directions:
Comments:
Reasons: Secured Area

Building 920
Kansas Army Ammunition Plant
Parsons KS 67357
Landholding Agency: Army
Property Number: 21199620582
Status: Unutilized
Directions:
Comments:
Reasons: Secured Area

Buildings 921, 923, 973, 974,
Kansas Army Ammunition Plant
Parsons KS 67357
Landholding Agency: Army
Property Number: 21199620583
Status: Unutilized
Directions: 983, 984, 986, 989
Comments:
Reasons: Secured Area

Building 924
Kansas Army Ammunition Plant
Parsons KS 67357
Landholding Agency: Army
Property Number: 21199620584
Status: Unutilized
Directions:
Comments:
Reasons: Secured Area

Building 929

Kansas Army Ammunition Plant
Parsons KS 67357
Landholding Agency: Army
Property Number: 21199620586
Status: Unutilized
Directions:
Comments:
Reasons: Secured Area

Building 930
Kansas Army Ammunition Plant
Parsons KS 67357
Landholding Agency: Army
Property Number: 21199620587
Status: Unutilized
Directions:
Comments:
Reasons: Secured Area

Building 946
Kansas Army Ammunition Plant
Parsons KS 67357
Landholding Agency: Army
Property Number: 21199620588
Status: Unutilized
Directions:
Comments:
Reasons: Secured Area

Building 951
Kansas Army Ammunition Plant
Parsons KS 67357
Landholding Agency: Army
Property Number: 21199620589
Status: Unutilized
Directions:
Comments:
Reasons: Secured Area

Building 952
Kansas Army Ammunition Plant
Parsons KS 67357
Landholding Agency: Army
Property Number: 21199620590
Status: Unutilized
Directions:
Comments:
Reasons: Secured Area

Building 927
Kansas Army Ammunition Plant
Parsons KS 67357
Landholding Agency: Army
Property Number: 21199620591
Status: Unutilized
Directions:
Comments:
Reasons: Secured Area

Building 997
Kansas Army Ammunition Plant
Parsons KS 67357
Landholding Agency: Army
Property Number: 21199620592
Status: Unutilized
Directions:
Comments:
Reasons: Secured Area

Building 1003
Kansas Army Ammunition Plant
Parsons KS 67357
Landholding Agency: Army
Property Number: 21199620593
Status: Unutilized
Directions:
Comments:
Reasons: Secured Area

Buildings 1004, 1018
Kansas Army Ammunition Plant
Parsons KS 67357
Landholding Agency: Army
Property Number: 21199620594
Status: Unutilized
Directions:
Comments:
Reasons: Secured Area

Building 1005
Kansas Army Ammunition Plant
Parsons KS 67357
Landholding Agency: Army
Property Number: 21199620595
Status: Unutilized
Directions:
Comments:
Reasons: Secured Area

Building 1006
Kansas Army Ammunition Plant
Parsons KS 67357
Landholding Agency: Army
Property Number: 21199620596
Status: Unutilized
Directions:
Comments:
Reasons: Secured Area

Buildings 1007, 1009
Kansas Army Ammunition Plant
Parsons KS 67357
Landholding Agency: Army
Property Number: 21199620597
Status: Unutilized
Directions:
Comments:
Reasons: Secured Area

Building 1008
Kansas Army Ammunition Plant
Parsons KS 67357
Landholding Agency: Army
Property Number: 21199620598
Status: Unutilized
Directions:
Comments:
Reasons: Secured Area

Building 1011
Kansas Army Ammunition Plant
Parsons KS 67357
Landholding Agency: Army
Property Number: 21199620599
Status: Unutilized
Directions:
Comments:
Reasons: Secured Area

Buildings 1012, 1022, 1023
Kansas Army Ammunition Plant
Parsons KS 67357
Landholding Agency: Army
Property Number: 21199620600
Status: Unutilized
Directions:
Comments:
Reasons: Secured Area

Building 1017
Kansas Army Ammunition Plant
Parsons KS 67357
Landholding Agency: Army
Property Number: 21199620601
Status: Unutilized
Directions:
Comments:
Reasons: Secured Area

Building 1019
Kansas Army Ammunition Plant
Parsons KS 67357
Landholding Agency: Army
Property Number: 21199620602
Status: Unutilized
Directions:
Comments:
Reasons: Secured Area

Building 1020
Kansas Army Ammunition Plant
Parsons KS 67357
Landholding Agency: Army
Property Number: 21199620603
Status: Unutilized
Directions:
Comments:
Reasons: Secured Area

Building 1025
Kansas Army Ammunition Plant
Parsons KS 67357
Landholding Agency: Army
Property Number: 21199620604
Status: Unutilized
Directions:
Comments:
Reasons: Secured Area

Building 1028
Kansas Army Ammunition Plant
Parsons KS 67357
Landholding Agency: Army
Property Number: 21199620605
Status: Unutilized
Directions:
Comments:
Reasons: Secured Area

Building 1047
Kansas Army Ammunition Plant
Parsons KS 67357
Landholding Agency: Army
Property Number: 21199620606
Status: Unutilized
Directions:
Comments:
Reasons: Secured Area

Buildings 1048, 1068, 1090
Kansas Army Ammunition Plant
Parsons KS 67357
Landholding Agency: Army
Property Number: 21199620607
Status: Unutilized
Directions:
Comments:
Reasons: Secured Area

Building 1064
Kansas Army Ammunition Plant
Parsons KS 67357
Landholding Agency: Army
Property Number: 21199620608
Status: Unutilized
Directions:
Comments:
Reasons: Secured Area

Building 1065
Kansas Army Ammunition Plant
Parsons KS 67357
Landholding Agency: Army
Property Number: 21199620609
Status: Unutilized
Directions:
Comments:
Reasons: Secured Area

Buildings 1072, 1082, 1095
Kansas Army Ammunition Plant
Parsons KS 67357
Landholding Agency: Army
Property Number: 21199620610
Status: Unutilized
Directions:

Comments:
Reasons: Secured Area

Building 1124
Kansas Army Ammunition Plant
Parsons KS 67357
Landholding Agency: Army
Property Number: 21199620611
Status: Unutilized
Directions:
Comments:
Reasons: Secured Area

Building 1202
Kansas Army Ammunition Plant
Parsons KS 67357
Landholding Agency: Army
Property Number: 21199620612
Status: Unutilized
Directions:
Comments:
Reasons: Secured Area

Building 1205
Kansas Army Ammunition Plant
Parsons KS 67357
Landholding Agency: Army
Property Number: 21199620613
Status: Unutilized
Directions:
Comments:
Reasons: Secured Area

Building 1206
Kansas Army Ammunition Plant
Parsons KS 67357
Landholding Agency: Army
Property Number: 21199620614
Status: Unutilized
Directions:
Comments:
Reasons: Secured Area

Building 1207
Kansas Army Ammunition Plant
Parsons KS 67357
Landholding Agency: Army
Property Number: 21199620615
Status: Unutilized
Directions:
Comments:
Reasons: Secured Area

Building 1223
Kansas Army Ammunition Plant
Parsons KS 67357
Landholding Agency: Army
Property Number: 21199620616
Status: Unutilized
Directions:
Comments:
Reasons: Secured Area

Building 1225
Kansas Army Ammunition Plant
Parsons KS 67357
Landholding Agency: Army
Property Number: 21199620617
Status: Unutilized
Directions:
Comments:
Reasons: Secured Area

Buildings 1402, 1403, 1404
Kansas Army Ammunition Plant
Parsons KS 67357
Landholding Agency: Army
Property Number: 21199620618
Status: Unutilized
Directions: 1405, 1406, 1407, 1408, 1409, 1410
Comments:
Reasons: Secured Area

Buildings 1502 thru 1556
Kansas Army Ammunition Plant
Parsons KS 67357
Landholding Agency: Army
Property Number: 21199620619
Status: Unutilized
Directions: (55 total)
Comments:
Reasons: Secured Area

Buildings 1602 thru 1625
Kansas Army Ammunition Plant
Parsons KS 67357
Landholding Agency: Army
Property Number: 21199620620
Status: Unutilized
Directions: (24 total)
Comments:
Reasons: Secured Area

Buildings 1702 thru 1721
Kansas Army Ammunition Plant
Parsons KS 67357
Landholding Agency: Army
Property Number: 21199620621
Status: Unutilized
Directions: (20 total)
Comments:
Reasons: Secured Area

Buildings 1803, 1804, 1805,
Kansas Army Ammunition Plant
Parsons KS 67357
Landholding Agency: Army
Property Number: 21199620622
Status: Unutilized
Directions: 1806, 1807, 1810, 1811, 1812, 1813, 1816, 1818, 1819, 1823, 1825
Comments:
Reasons: Secured Area

Buildings 1931 thru 1989
Kansas Army Ammunition Plant
Parsons KS 67357
Landholding Agency: Army
Property Number: 21199620623
Status: Unutilized
Directions: Except 1961, 1974, 1976
Comments:
Reasons: Secured Area

Building 2002
Kansas Army Ammunition Plant
Parsons KS 67357
Landholding Agency: Army
Property Number: 21199620624
Status: Unutilized
Directions:
Comments:
Reasons: Secured Area

Building 2105A
Kansas Army Ammunition Plant
Parsons KS 67357
Landholding Agency: Army
Property Number: 21199620625
Status: Unutilized
Directions:
Comments:
Reasons: Secured Area

Building 3004
Kansas Army Ammunition Plant
Parsons KS 67357
Landholding Agency: Army
Property Number: 21199620626
Status: Unutilized
Directions:
Comments:
Reasons: Secured Area

Building 3005
Kansas Army Ammunition Plant
Parsons KS 67357
Landholding Agency: Army
Property Number: 21199620627
Status: Unutilized
Directions:
Comments:
Reasons: Secured Area

Building 3006
Kansas Army Ammunition Plant
Parsons KS 67357
Landholding Agency: Army
Property Number: 21199620628
Status: Unutilized
Directions:
Comments:
Reasons: Secured Area

Building 3007
Kansas Army Ammunition Plant
Parsons KS 67357
Landholding Agency: Army
Property Number: 21199620629
Status: Unutilized
Directions:
Comments:
Reasons: Secured Area

Building 3008
Kansas Army Ammunition Plant
Parsons KS 67357
Landholding Agency: Army
Property Number: 21199620630
Status: Unutilized
Directions:
Comments:
Reasons: Secured Area

Building 3009
Kansas Army Ammunition Plant
Parsons KS 67357
Landholding Agency: Army
Property Number: 21199620631
Status: Unutilized
Directions:
Comments:
Reasons: Secured Area

Building 3010
Kansas Army Ammunition Plant
Parsons KS 67357
Landholding Agency: Army
Property Number: 21199620632
Status: Unutilized
Directions:
Comments:
Reasons: Secured Area

Building 3011
Kansas Army Ammunition Plant
Parsons KS 67357
Landholding Agency: Army
Property Number: 21199620633
Status: Unutilized
Directions:
Comments:
Reasons: Secured Area

Building 3012
Kansas Army Ammunition Plant
Parsons KS 67357
Landholding Agency: Army
Property Number: 21199620634
Status: Unutilized
Directions:
Comments:
Reasons: Secured Area

Building 3014
Kansas Army Ammunition Plant

Parsons KS 67357
Landholding Agency: Army
Property Number: 21199620635
Status: Unutilized
Directions:
Comments:
Reasons: Secured Area

Building 3015
Kansas Army Ammunition Plant
Parsons KS 67357
Landholding Agency: Army
Property Number: 21199620636
Status: Unutilized
Directions:
Comments:
Reasons: Secured Area

Building 3016
Kansas Army Ammunition Plant
Parsons KS 67357
Landholding Agency: Army
Property Number: 21199620637
Status: Unutilized
Directions:
Comments:
Reasons: Secured Area

Building 3017
Kansas Army Ammunition Plant
Parsons KS 67357
Landholding Agency: Army
Property Number: 21199620638
Status: Unutilized
Directions:
Comments:
Reasons: Secured Area

Bldg. 00495
Ft. Leavenworth
Ft. Leavenworth KS
Landholding Agency: Army
Property Number: 21201110045
Status: Unutilized
Reasons: Extensive deterioration

Bldg. 09451
9455 Rifle Range Road
Fort Riley KS
Landholding Agency: Army
Property Number: 21201120068
Status: Unutilized
Reasons: Other—Temporary bldg., gas chamber

Bldg. 00745
745 Ray Rd.
Fort Riley USAR
Fort Riley KS
Landholding Agency: Army
Property Number: 21201120069
Status: Unutilized
Reasons: Other—aviation storage shed; off site removal

Bldg. 08322
Ft. Riley USAR
Fort Riley KS
Landholding Agency: Army
Property Number: 21201120071
Status: Unutilized
Reasons: Other—to be demolished; off site removal

Bldg. 8329
8329 Wells St.
Ft. Riley
Fort Riley KS
Landholding Agency: Army
Property Number: 21201120072
Status: Unutilized
Reasons: Other—vehicle maint.; oil storage

Bldg. 08324
8324 Wells St.
Fort Riley KS
Landholding Agency: Army
Property Number: 21201120073
Status: Unutilized
Reasons: Other—to be demolished

Bldg. 07634
7634 McGlachlin
Fort Riley KS
Landholding Agency: Army
Property Number: 21201120074
Status: Unutilized
Reasons: Other—Power Plant

Bldg. 00747
747 Ray Rd.
Fort Riley KS
Landholding Agency: Army
Property Number: 21201120078
Status: Unutilized
Reasons: Other—Power plant; off site removal

Bldg. 00613
null
Fort Riley KS
Landholding Agency: Army
Property Number: 21201120079
Status: Unutilized
Reasons: Other—off site removal only

Bldg. 01781
1781 ''K'' Street
Fort Riley KS
Landholding Agency: Army
Property Number: 21201120082
Status: Unutilized
Reasons: Other—work animal storage (DNE)Other environmental

Bldg. 09098
09098 Vinton School Road
Fort Riley KS
Landholding Agency: Army
Property Number: 21201120083
Status: Unutilized
Reasons: Other—guard shack; off site removal

Bldg 09455
9455 Rifle Range Road
Fort Riley KS
Landholding Agency: Army
Property Number: 21201120085
Status: Unutilized
Reasons: Other—Gas Chamber; off site removal only

Bldg. 00615
615 Huebner Rd.
Fort Riley KS
Landholding Agency: Army
Property Number: 21201120087
Status: Unutilized
Reasons: Other—off site removal only

Bldg. 08323
8323 Wells St.
Fort Riley KS
Landholding Agency: Army
Property Number: 21201120088
Status: Unutilized
Reasons: Other—vehicle maint. shop; off site removal

Bldg. 08328
8328 Wells St.
Fort Riley KS
Landholding Agency: Army
Property Number: 21201120089
Status: Unutilized
Reasons: Other environmental

Bldg. 07739
7739 Apennines Drive
Fort Riley KS
Landholding Agency: Army
Property Number: 21201120090
Status: Unutilized
Reasons: Other environmental; Other—oil storage bldg.; off site removal

Bldg 01780
1780 ''K'' Street
Fort Riley KS
Landholding Agency: Army
Property Number: 21201120091
Status: Unutilized
Reasons: Other environmental

Bldg 00495
McPherson
Fort Leavenworth KS
Landholding Agency: Army
Property Number: 21201130029
Status: Unutilized
Reasons: Secured Area; Extensive deterioration

Bldg. 09382
Fort Riley
Fort Riley KS 66442
Landholding Agency: Army
Property Number: 21201130035
Status: Unutilized
Reasons: Extensive deterioration

4 Bldgs.
null
Fort Riley KS
Landholding Agency: Army
Property Number: 21201130037
Status: Unutilized
Directions: 09081, 07123, 1865, 00747
Reasons: Extensive deterioration

6 Bldgs.
null
Fort Riley KS
Landholding Agency: Army
Property Number: 21201130038
Status: Unutilized
Directions: 09079, 09078, 09455, 09382, 09087, 09381
Reasons: Extensive deterioration

Bldgs. 09133 and 1865
null
Fort Riley KS 66442
Landholding Agency: Army
Property Number: 21201130043
Status: Unutilized
Reasons: Extensive deterioration

Bldg, 612
null
Fort Riley KS 66442
Landholding Agency: Army
Property Number: 21201130045
Status: Unutilized
Reasons: Extensive deterioration

5 Bldgs.
null
Fort Riley KS 66442
Landholding Agency: Army
Property Number: 21201130060
Status: Unutilized
Directions: 09455, 07634, 00852, 00853
Reasons: Extensive deterioration

2 Bldgs.
null
Fort Riley KS 66442
Landholding Agency: Army
Property Number: 21201130064

Status: Unutilized
Directions: 09098, 00613
Reasons: Extensive deterioration

Bldg 00512 & 00617
Fort Riley
Fort Riley KS 66442
Landholding Agency: Army
Property Number: 21201140064
Status: Unutilized
Reasons: Secured Area

Kentucky

Bldg. 126
Lexington-Blue Grass Army Depot
Lexington KY 40511
Landholding Agency: Army
Property Number: 21199011661
Status: Unutilized
Directions: 12 miles northeast of Lexington, Kentucky.
Comments:
Reasons: Other—Sewage treatment facility; Secured Area

Bldg. 12
Lexington—Blue Grass Army Depot
Lexington KY 40511
Landholding Agency: Army
Property Number: 21199011663
Status: Unutilized
Directions: 12 miles Northeast of Lexington Kentucky.
Comments:
Reasons: Other—Industrial waste treatment plant.

Bldg. 07178
Fort Campbell
Ft. Campbell KY 42223
Landholding Agency: Army
Property Number: 21200220029
Status: Unutilized
GSA Number:
Reasons: Extensive deterioration

Bldg. 00023
Blue Grass Army Depot
Richmond KY 40475
Landholding Agency: Army
Property Number: 21200520011
Status: Unutilized
Reasons: Secured Area

Bldg. 07230
Fort Campbell
Christian KY 42223
Landholding Agency: Army
Property Number: 21200520015
Status: Unutilized
Reasons: Extensive deterioration

Bldg. 06612
Fort Campbell
Christian KY 42223
Landholding Agency: Army
Property Number: 21200720024
Status: Unutilized
Reasons: Extensive deterioration

Bldg. 3216
Fort Campbell
Christian KY 42223
Landholding Agency: Army
Property Number: 21201030013
Status: Underutilized
Reasons: Secured Area

Bldgs. 01568 and 01572
Spillway Court
Fort Campbell KY 42223
Landholding Agency: Army
Property Number: 21201210072
Status: Underutilized
Comments: Nat'l security concerns; restricted access and no alternative method of access
Reasons: Secured Area

5 Bldgs.
Fort Campbell Military Installation
Fort Campbell KY 42223
Landholding Agency: Army
Property Number: 21201210073
Status: Unutilized
Directions: 6536, 7256, 7293, A3902, A6942
Comments: Nat'l security concerns; restricted access and no alternative method of access
Reasons: Secured Area

4 Bldgs.
Indiana Ave.
Fort Campbell KY 42223
Landholding Agency: Army
Property Number: 21201210074
Status: Unutilized
Directions: 2401, 2402, 2404, 2506
Comments: Nat'l security concerns; restricted access and no alternative method of access
Reasons: Secured Area

Bldg. 2435A
Ft. Campbell
Ft. Campbell KY 42223
Landholding Agency: Army
Property Number: 21201220005
Status: Underutilized
Comments: Nat'l security concerns; public access is denied; only authorized military personnal; no alternative method for public to gain access w/out comprising nat'l security
Reasons: Secured Area

Louisiana

Bldg. 108
Louisiana Army Ammunition Plant
Area A
Doyline LA 71023
Landholding Agency: Army
Property Number: 21199011714
Status: Unutilized
Directions:
Comments:
Reasons: Within 2000 ft. of flammable or explosive material; Secured Area

Bldg. 110
Louisiana Army Ammunition Plant
Area A
Doyline LA 71023
Landholding Agency: Army
Property Number: 21199011715
Status: Unutilized
Directions:
Comments: Within 2000 ft. of flammable or explosive material; Secured Area

Bldg. 111
Louisiana Army Ammunition Plant
Area A
Doyline LA 71023
Landholding Agency: Army
Property Number: 21199011716
Status: Unutilized
Directions:
Comments:
Reasons: Secured Area; Within 2000 ft. of flammable or explosive material

Bldg. A133
Louisiana Army Ammunition Plant
Doylin LA 71023
Landholding Agency: Army
Property Number: 21199011735
Status: Unutilized
Directions:
Comments:
Reasons: Secured Area

Bldg. A132
Louisiana Army Amnmunition Plant
Area K
Doylin LA 71023
Landholding Agency: Army
Property Number: 21199011736
Status: Unutilized
Directions:
Comments:
Reasons: Secured Area

Bldg. A131
Louisiana Army Ammunition Plant
Doylin LA 71023
Landholding Agency: Army
Property Number: 21199011737
Status: Underutilized
Directions:
Comments:
Reasons: Secured Area

Bldg. A130
Louisiana Army Ammunition Plant
Area A
Doyline LA 71023
Landholding Agency: Army
Property Number: 21199012112
Status: Unutilized
Directions:
Comments:
Reasons: Secured Area

Bldg. X5093
Louisiana Army Ammunition Plant
Doyline LA
Landholding Agency: Army
Property Number: 21199013863
Status: Unutilized
Directions:
Comments:
Reasons: Secured Area

Bldg. X5094
Louisiana Army Ammunition Plant
Doyline LA
Landholding Agency: Army
Property Number: 21199013865
Status: Unutilized
Directions:
Comments:
Reasons: Secured Area

Bldg. S1627
Louisiana Army Ammunition Plant
Doyline LA
Landholding Agency: Army
Property Number: 21199013868
Status: Unutilized
Directions:
Comments:
Reasons: Secured Area

Bldg. X5032
Louisiana Army Ammunition Plant
Doyline LA
Landholding Agency: Army
Property Number: 21199013869
Status: Unutilized
Directions:
Comments:
Reasons: Secured Area

Bldg. J1015m
Louisiana Army Ammunition Plant
Doylin LA
Landholding Agency: Army
Property Number: 21199110131

Status: Unutilized
Directions:
Comments:
Reasons: Within 2000 ft. of flammable or explosive material; Secured Area

Bldg. B–1442
Louisiana Army Ammunition Plant
Doyline LA 71023
Landholding Agency: Army
Property Number: 21199240138
Status: Unutilized
Directions:
Comments:
Reasons: Secured Area

Bldg. B–1453
Louisiana Army Ammunition Plant
Doyline LA 71023
Landholding Agency: Army
Property Number: 21199240139
Status: Unutilized
Directions:
Comments:
Reasons: Secured Area

Bldg. D1249
Louisiana Army Ammunition Plant
Doyline LA 71023
Landholding Agency: Army
Property Number: 21199240140
Status: Unutilized
Directions:
Comments:
Reasons: Secured Area

Bldg. D1250
Louisiana Army Ammunition Plant
Doyline LA 71023
Landholding Agency: Army
Property Number: 21199240141
Status: Unutilized
Directions:
Comments:
Reasons: Secured Area

Bldg. K1104
Louisiana Army Ammunition Plant
Doyline LA 71023
Landholding Agency: Army
Property Number: 21199240147
Status: Unutilized
Directions:
Comments:
Reasons: Secured Area

Bldg. X–5033
Louisiana Army Ammunition Plant
Doyline LA 71023
Landholding Agency: Army
Property Number: 21199420332
Status: Unutilized
Directions:
Comments:
Reasons: Extensive deterioration; Within 2000 ft. of flammable or explosive material; Secured Area

Bldg. D1247
Louisiana Army Ammunition Plant
Doyline LA 71023
Landholding Agency: Army
Property Number: 21199610049
Status: Unutilized
Directions:
Comments:
Reasons: Within 2000 ft. of flammable or explosive material; Extensive deterioration

Bldg. D1253
Louisiana Army Ammunition Plant
Doyline LA 71023
Landholding Agency: Army
Property Number: 21199610050
Status: Unutilized
Directions:
Comments:
Reasons: Extensive deterioration; Within 2000 ft. of flammable or explosive material

Bldg. E1727
Louisiana Army Ammunition Plant
Doyline LA 71023
Landholding Agency: Army
Property Number: 21199610051
Status: Unutilized
Directions:
Comments:
Reasons: Within 2000 ft. of flammable or explosive material; Extensive deterioration

Bldgs. C1300, C1346, D1200
Louisiana Army Ammunition Plant
Doyline LA 71023
Landholding Agency: Army
Property Number: 21199610054
Status: Unutilized
Directions:
Comments:
Reasons: Within 2000 ft. of flammable or explosive material; Secured Area

Bldgs. S1600, S1606
Louisiana Army Ammunition Plant
Doyline LA 71023
Landholding Agency: Army
Property Number: 21199610055
Status: Unutilized
Directions:
Comments:
Reasons: Within 2000 ft. of flammable or explosive material; Secured Area

Bldgs. M2700
Louisiana Army Ammunition Plant
Doyline LA 71023
Landholding Agency: Army
Property Number: 21199610056
Status: Unutilized
Directions:
Comments:
Reasons: Secured Area; Within 2000 ft. of flammable or explosive material

Bldg. S–1636
Louisiana Army Ammunition Plant
Doyline LA 71023
Landholding Agency: Army
Property Number: 21199610060
Status: Unutilized
Directions:
Comments:
Reasons: Within 2000 ft. of flammable or explosive material; Secured Area

Bldg. S–1635
Louisiana Army Ammunition Plant
Doyline LA 71023
Landholding Agency: Army
Property Number: 21199610061
Status: Underutilized
Directions:
Comments:
Reasons: Within 2000 ft. of flammable or explosive material; Secured Area

Bldg. D–1237
Louisiana Army Ammunition Plant
Doyline LA 71023
Landholding Agency: Army
Property Number: 21199610063
Status: Underutilized
Directions:
Comments:
Reasons: Within 2000 ft. of flammable or explosive material; Secured Area

Bldg. C–1344
Louisiana Army Ammunition Plant
Doyline LA 71023
Landholding Agency: Army
Property Number: 21199610064
Status: Underutilized
Directions:
Comments:
Reasons: Within 2000 ft. of flammable or explosive material; Secured Area

Bldg. C–1309
Louisiana Army Ammunition Plant
Doyline LA 71023
Landholding Agency: Army
Property Number: 21199610065
Status: Underutilized
Directions:
Comments:
Reasons: Secured Area; Within 2000 ft. of flammable or explosive material

Bldg. B–1461
Louisiana Army Ammunition Plant
Doyline LA 71023
Landholding Agency: Army
Property Number: 21199610066
Status: Underutilized
Directions:
Comments:
Reasons: Within 2000 ft. of flammable or explosive material; Secured Area

Bldg. S–1604
Louisiana Army Ammunition Plant
Doyline LA 71023
Landholding Agency: Army
Property Number: 21199610067
Status: Underutilized
Directions:
Comments:
Reasons: Within 2000 ft. of flammable or explosive material; Secured Area

Bldg. A–117
Louisiana Army Ammunition Plant
Doyline LA 71023
Landholding Agency: Army
Property Number: 21199610068
Status: Underutilized
Directions:
Comments:
Reasons: Secured Area; Within 2000 ft. of flammable or explosive material

Bldgs. S–1620, S–1621
Louisiana Army Ammunition Plant
Doyline LA 71023
Landholding Agency: Army
Property Number: 21199610069
Status: Underutilized
Directions:
Comments:
Reasons: Within 2000 ft. of flammable or explosive material; Secured Area

Bldg. A–120
Louisiana Army Ammunition Plant
Doyline LA 71023
Landholding Agency: Army
Property Number: 21199610070
Status: Underutilized
Directions:
Comments:
Reasons: Within 2000 ft. of flammable or explosive material; Secured Area

Bldg. S–1602
Louisiana Army Ammunition Plant

Doyline LA 71023
Landholding Agency: Army
Property Number: 21199610072
Status: Underutilized
Directions:
Comments:
Reasons: Within 2000 ft. of flammable or explosive material; Secured Area

Bldg. M–2701
Louisiana Army Ammunition Plant
Doyline LA 71023
Landholding Agency: Army
Property Number: 21199610073
Status: Underutilized
Directions:
Comments:
Reasons: Secured Area; Within 2000 ft. of flammable or explosive material

Bldg. C–1310
Louisiana Army Ammunition Plant
Doyline LA 71023
Landholding Agency: Army
Property Number: 21199610074
Status: Underutilized
Directions:
Comments:
Reasons: Secured Area; Within 2000 ft. of flammable or explosive material

Bldg. S–1605
Louisiana Army Ammunition Plant
Doyline LA 71023
Landholding Agency: Army
Property Number: 21199610075
Status: Underutilized
Directions:
Comments:
Reasons: Secured Area; Within 2000 ft. of flammable or explosive material

Bldg. A–118
Louisiana Army Ammunition Plant
Doyline LA 71023
Landholding Agency: Army
Property Number: 21199610076
Status: Underutilized
Directions:
Comments:
Reasons: Secured Area; Within 2000 ft. of flammable or explosive material

Bldg. A–129
Louisiana Army Ammunition Plant
Doyline LA 71023
Landholding Agency: Army
Property Number: 21199610078
Status: Unutilized
Directions:
Comments:
Reasons: Secured Area; Within 2000 ft. of flammable or explosive material

Bldg. A–116
Louisiana Army Ammunition Plant
Doyline LA 71023
Landholding Agency: Army
Property Number: 21199610079
Status: Unutilized
Directions:
Comments:
Reasons: Secured Area; Within 2000 ft. of flammable or explosive material

Bldgs. C–1301, C–1303
Louisiana Army Ammunition Plant
Doyline LA 71023
Landholding Agency: Army
Property Number: 21199610083
Status: Unutilized
Directions:
Comments:
Reasons: Within 2000 ft. of flammable or explosive material; Secured Area

Bldg. S–1601
Louisiana Army Ammunition Plant
Doyline LA 71023
Landholding Agency: Army
Property Number: 21199610086
Status: Unutilized
Directions:
Comments:
Reasons: Within 2000 ft. of flammable or explosive material; Secured Area

Bldgs. K–1101, K–1103
Louisiana Army Ammunition Plant
Doyline LA 71023
Landholding Agency: Army
Property Number: 21199610087
Status: Unutilized
Directions:
Comments:
Reasons: Secured Area; Within 2000 ft. of flammable or explosive material

Bldg. J–1002
Louisiana Army Ammunition Plant
Doyline LA 71023
Landholding Agency: Army
Property Number: 21199610088
Status: Unutilized
Directions:
Comments:
Reasons: Secured Area; Within 2000 ft. of flammable or explosive material

Bldgs. D–1201, D–1203
Louisiana Army Ammunition Plant
Doyline LA 71023
Landholding Agency: Army
Property Number: 21199610091
Status: Unutilized
Directions:
Comments:
Reasons: Secured Area; Within 2000 ft. of flammable or explosive material

Bldgs. S–1612, S–1618, S–1615
Louisiana Army Ammunition Plant
Doyline LA 71023
Landholding Agency: Army
Property Number: 21199610092
Status: Unutilized
Directions:
Comments:
Reasons: Within 2000 ft. of flammable or explosive material; Secured Area

Bldg. C–1360
Louisiana Army Ammunition Plant
Doyline LA 71023
Landholding Agency: Army
Property Number: 21199610093
Status: Unutilized
Directions:
Comments:
Reasons: Secured Area; Within 2000 ft. of flammable or explosive material

Bldg. K–1120
Louisiana Army Ammunition Plant
Doyline LA 71023
Landholding Agency: Army
Property Number: 21199610094
Status: Unutilized
Directions:
Comments:
Reasons: Secured Area; Within 2000 ft. of flammable or explosive material

Bldg. S–1603
Louisiana Army Ammunition Plant
Doyline LA 71023
Landholding Agency: Army
Property Number: 21199610096
Status: Unutilized
Directions:
Comments:
Reasons: Within 2000 ft. of flammable or explosive material; Secured Area

Bldg. O–1503
Louisiana Army Ammunition Plant
Doyline LA 71023
Landholding Agency: Army
Property Number: 21199610097
Status: Unutilized
Directions:
Comments:
Reasons: Within 2000 ft. of flammable or explosive material; Secured Area

Bldg. K–1100
Louisiana Army Ammunition Plant
Doyline LA 71023
Landholding Agency: Army
Property Number: 21199610098
Status: Unutilized
Directions:
Comments:
Reasons: Within 2000 ft. of flammable or explosive material; Secured Area

Bldg. J–1001
Louisiana Army Ammunition Plant
Doyline LA 71023
Landholding Agency: Army
Property Number: 21199610099
Status: Unutilized
Directions:
Comments:
Reasons: Secured Area; Within 2000 ft. of flammable or explosive material

Bldg. D–1202
Louisiana Army Ammunition Plant
Doyline LA 71023
Landholding Agency: Army
Property Number: 21199610101
Status: Unutilized
Directions:
Comments:
Reasons: Secured Area; Within 2000 ft. of flammable or explosive material

Bldg. C–1302
Louisiana Army Ammunition Plant
Doyline LA 71023
Landholding Agency: Army
Property Number: 21199610102
Status: Unutilized
Directions:
Comments:
Reasons: Within 2000 ft. of flammable or explosive material; Secured Area

Bldg. S–1613
Louisiana Army Ammunition Plant
Doyline LA 71023
Landholding Agency: Army
Property Number: 21199610104
Status: Unutilized
Directions:
Comments:
Reasons: Secured Area; Within 2000 ft. of flammable or explosive material

Bldgs. K–1105, K–1111, K–1110
Louisiana Army Ammunition Plant
Doyline LA 71023
Landholding Agency: Army
Property Number: 21199610105
Status: Unutilized

Directions:
Comments:
Reasons: Secured Area; Within 2000 ft. of flammable or explosive material

Bldg. A–149
Louisiana Army Ammunition Plant
Doyline LA 71023
Landholding Agency: Army
Property Number: 21199610107
Status: Unutilized
Directions:
Comments:
Reasons: Secured Area; Within 2000 ft. of flammable or explosive material

Bldgs. J–1006, J–1008
Louisiana Army Ammunition Plant
Doyline LA 71023
Landholding Agency: Army
Property Number: 21199610111
Status: Unutilized
Directions:
Comments:
Reasons: Within 2000 ft. of flammable or explosive material; Secured Area

Bldgs. D–1221, D–1224
Louisiana Army Ammunition Plant
Doyline LA 71023
Landholding Agency: Army
Property Number: 21199610112
Status: Unutilized
Directions:
Comments:
Reasons: Secured Area; Within 2000 ft. of flammable or explosive material

Bldg. J–1011
Louisiana Army Ammunition Plant
Doyline LA 71023
Landholding Agency: Army
Property Number: 21199610115
Status: Unutilized
Directions:
Comments:
Reasons: Within 2000 ft. of flammable or explosive material; Secured Area

4 Bldgs.
Louisiana Army Ammunition Plant
X–5013, X–5043, X–5083, X–5091
Doyline LA 71023
Landholding Agency: Army
Property Number: 21199610116
Status: Unutilized
Directions:
Comments:
Reasons: Secured Area; Within 2000 ft. of flammable or explosive material

Bldgs. D–1262, D–1263, D–1264
Louisiana Army Ammunition Plant
Doyline LA 71023
Landholding Agency: Army
Property Number: 21199610118
Status: Unutilized
Directions:
Comments:
Reasons: Within 2000 ft. of flammable or explosive material; Secured Area

Bldg. C–1370
Louisiana Army Ammunition Plant
Doyline LA 71023
Landholding Agency: Army
Property Number: 21199610119
Status: Unutilized
Directions:
Comments:
Reasons: Within 2000 ft. of flammable or explosive material; Secured Area

5 Bldgs.
Louisiana Army Ammunition Plant
X–5069, X–5071, X–5077, X–5078, X–5084
Doyline LA 71023
Landholding Agency: Army
Property Number: 21199610121
Status: Unutilized
Directions:
Comments:
Reasons: Within 2000 ft. of flammable or explosive material; Secured Area

Bldg. A–134
Louisiana Army Ammunition Plant
Doyline LA 71023
Landholding Agency: Army
Property Number: 21199610122
Status: Unutilized
Directions:
Comments:
Reasons: Within 2000 ft. of flammable or explosive material; Secured Area

Bldg. S–1637
Louisiana Army Ammunition Plant
Doyline LA 71023
Landholding Agency: Army
Property Number: 21199610126
Status: Unutilized
Directions:
Comments:
Reasons: Within 2000 ft. of flammable or explosive material; Secured Area

4 Bldgs.
Louisiana Army Ammunition Plant
C–1351, C–1352, C–1355, C–1353
Doyline LA 71023
Landholding Agency: Army
Property Number: 21199610128
Status: Unutilized
Directions:
Comments:
Reasons: Within 2000 ft. of flammable or explosive material; Secured Area

Bldgs. E–1736, E–1734, E–1733
Louisiana Army Ammunition Plant
Doyline LA 71023
Landholding Agency: Army
Property Number: 21199610129
Status: Unutilized
Directions:
Comments:
Reasons: Within 2000 ft. of flammable or explosive material; Secured Area

Bldg. Y–2621
Louisiana Army Ammunition Plant
Doyline LA 71023
Landholding Agency: Army
Property Number: 21199610130
Status: Unutilized
Directions:
Comments:
Reasons: Secured Area; Within 2000 ft. of flammable or explosive material

Bldg. D–1256
Louisiana Army Ammunition Plant
Doyline LA 71023
Landholding Agency: Army
Property Number: 21199610131
Status: Unutilized
Directions:
Comments:
Reasons: Within 2000 ft. of flammable or explosive material; Secured Area

Bldg. X–5016
Louisiana Army Ammunition Plant
Doyline LA 71023
Landholding Agency: Army
Property Number: 21199610132
Status: Unutilized
Directions:
Comments:
Reasons: Within 2000 ft. of flammable or explosive material; Secured Area

Bldgs. X–5026, X–5106
Louisiana Army Ammunition Plant
Doyline LA 71023
Landholding Agency: Army
Property Number: 21199610133
Status: Unutilized
Directions:
Comments:
Reasons: Within 2000 ft. of flammable or explosive material; Secured Area

Bldgs. D–1248, D–1251
Louisiana Army Ammunition Plant
Doyline LA 71023
Landholding Agency: Army
Property Number: 21199610134
Status: Unutilized
Directions:
Comments:
Reasons: Within 2000 ft. of flammable or explosive material; Secured Area

Bldg. E–1715
Louisiana Army Ammunition Plant
Doyline LA 71023
Landholding Agency: Army
Property Number: 21199610135
Status: Unutilized
Directions:
Comments:
Reasons: Within 2000 ft. of flammable or explosive material; Secured Area

Bldg. S–1629
Louisiana Army Ammunition Plant
Doyline LA 71023
Landholding Agency: Army
Property Number: 21199610137
Status: Unutilized
Directions:
Comments:
Reasons: Within 2000 ft. of flammable or explosive material; Secured Area

Bldg. D–1239
Louisiana Army Ammunition Plant
Doyline LA 71023
Landholding Agency: Army
Property Number: 21199610139
Status: Unutilized
Directions:
Comments:
Reasons: Within 2000 ft. of flammable or explosive material; Secured Area

Bldg. E–1732
Louisiana Army Ammunition Plant
Doyline LA 71023
Landholding Agency: Army
Property Number: 21199610140
Status: Unutilized
Directions:
Comments:
Reasons: Within 2000 ft. of flammable or explosive material; Secured Area

Bldg. J–1014
Louisiana Army Ammunition Plant
Doyline LA 71023
Landholding Agency: Army
Property Number: 21199610141
Status: Unutilized
Directions:
Comments:

Reasons: Within 2000 ft. of flammable or explosive material; Secured Area

Bldgs. C–1347, C–1349
Louisiana Army Ammunition Plant
Doyline LA 71023
Landholding Agency: Army
Property Number: 21199610142
Status: Unutilized
Directions:
Comments:
Reasons: Secured Area; Within 2000 ft. of flammable or explosive material

Bldg. C–1362
Louisiana Army Ammunition Plant
Doyline LA 71023
Landholding Agency: Army
Property Number: 21199610143
Status: Unutilized
Directions:
Comments:
Reasons: Within 2000 ft. of flammable or explosive material; Secured Area

Bldg. D–1259
Louisiana Army Ammunition Plant
Doyline LA 71023
Landholding Agency: Army
Property Number: 21199610144
Status: Unutilized
Directions:
Comments:
Reasons: Within 2000 ft. of flammable or explosive material; Secured Area

Bldgs. M–2702, M–2706
Louisiana Army Ammunition Plant
Doyline LA 71023
Landholding Agency: Army
Property Number: 21199610145
Status: Unutilized
Directions:
Comments:
Reasons: Secured Area; Within 2000 ft. of flammable or explosive material

Bldg. X–6112
Louisiana Army Ammunition Plant
Doyline LA 71023
Landholding Agency: Army
Property Number: 21199610147
Status: Unutilized
Directions:
Comments:
Reasons: Within 2000 ft. of flammable or explosive material; Secured Area

Bldg. C–1361
Louisiana Army Ammunition Plant
Doyline LA 71023
Landholding Agency: Army
Property Number: 21199610148
Status: Unutilized
Directions:
Comments:
Reasons: Secured Area; Within 2000 ft. of flammable or explosive material

Bldgs. D–1257, D–1267
Louisiana Army Ammunition Plant
Doyline LA 71023
Landholding Agency: Army
Property Number: 21199610149
Status: Unutilized
Directions:
Comments:
Reasons: Within 2000 ft. of flammable or explosive material; Secured Area

Bldgs. A–154, A–155
Louisiana Army Ammunition Plant
Doyline LA 71023
Landholding Agency: Army
Property Number: 21199610151
Status: Unutilized
Directions:
Comments:
Reasons: Within 2000 ft. of flammable or explosive material; Secured Area

Bldgs. Y–2626, Y–2627
Louisiana Army Ammunition Plant
Doyline LA 71023
Landholding Agency: Army
Property Number: 21199610152
Status: Unutilized
Directions:
Comments:
Reasons: Within 2000 ft. of flammable or explosive material; Secured Area

Bldgs. S–1652, S–1653
Louisiana Army Ammunition Plant
Doyline LA 71023
Landholding Agency: Army
Property Number: 21199610153
Status: Unutilized
Directions:
Comments:
Reasons: Secured Area; Within 2000 ft. of flammable or explosive material

Bldgs. Y–2613, Y–2614
Louisiana Army Ammunition Plant
Doyline LA 71023
Landholding Agency: Army
Property Number: 21199610154
Status: Unutilized
Directions:
Comments:
Reasons: Secured Area; Within 2000 ft. of flammable or explosive material

Bldgs. A–115, A–153
Louisiana Army Ammunition Plant
Doyline LA 71023
Landholding Agency: Army
Property Number: 21199610155
Status: Unutilized
Directions:
Comments:
Reasons: Within 2000 ft. of flammable or explosive material; Secured Area

Bldgs. M–2708, M–2709
Louisiana Army Ammunition Plant
Doyline LA 71023
Landholding Agency: Army
Property Number: 21199610157
Status: Unutilized
Directions:
Comments:
Reasons: Secured Area; Within 2000 ft. of flammable or explosive material

Bldgs. S–1639, S–1646
Louisiana Army Ammunition Plant
Doyline LA 71023
Landholding Agency: Army
Property Number: 21199610158
Status: Unutilized
Directions:
Comments:
Reasons: Within 2000 ft. of flammable or explosive material; Secured Area

Bldgs. D–1254, D–1255
Louisiana Army Ammunition Plant
Doyline LA 71023
Landholding Agency: Army
Property Number: 21199610162
Status: Unutilized
Directions:
Comments:
Reasons: Within 2000 ft. of flammable or explosive material; Secured Area

Bldgs. C–1356, C–1366, C–1367
Louisiana Army Ammunition Plant
Doyline LA 71023
Landholding Agency: Army
Property Number: 21199610164
Status: Unutilized
Directions:
Comments:
Reasons: Secured Area; Within 2000 ft. of flammable or explosive material

Bldg. A–157
Louisiana Army Ammunition Plant
Doyline LA 71023
Landholding Agency: Army
Property Number: 21199610165
Status: Unutilized
Directions:
Comments:
Reasons: Within 2000 ft. of flammable or explosive material; Secured Area

Bldg. M–2703
Louisiana Army Ammunition Plant
Doyline LA 71023
Landholding Agency: Army
Property Number: 21199610167
Status: Unutilized
Directions:
Comments:
Reasons: Within 2000 ft. of flammable or explosive material; Secured Area

Bldg. S–1624
Louisiana Army Ammunition Plant
Doyline LA 71023
Landholding Agency: Army
Property Number: 21199610170
Status: Unutilized
Directions:
Comments:
Reasons: Within 2000 ft. of flammable or explosive material; Secured Area

Bldg. M–0218
Louisiana Army Ammunition Plant
Doyline LA 71023
Landholding Agency: Army
Property Number: 21199610171
Status: Unutilized
Directions:
Comments:
Reasons: Secured Area; Within 2000 ft. of flammable or explosive material

Bldg. M–0217
Louisiana Army Ammunition Plant
Doyline LA 71023
Landholding Agency: Army
Property Number: 21199610172
Status: Unutilized
Directions:
Comments:
Reasons: Within 2000 ft. of flammable or explosive material; Secured Area

Bldg. D–1258
Louisiana Army Ammunition Plant
Doyline LA 71023
Landholding Agency: Army
Property Number: 21199610173
Status: Unutilized
Directions:
Comments:
Reasons: Secured Area; Within 2000 ft. of flammable or explosive material

Bldg. C–1363

Louisiana Army Ammunition Plant
Doyline LA 71023
Landholding Agency: Army
Property Number: 21199610174
Status: Unutilized
Directions:
Comments:
Reasons: Within 2000 ft. of flammable or explosive material; Secured Area

Building C–1319
Louisiana Army Ammunition Plant
Doyline LA 71023
Landholding Agency: Army
Property Number: 21199610175
Status: Unutilized
Directions:
Comments:
Reasons: Secured Area; Within 2000 ft. of flammable or explosive material

Building C–1317
Louisiana Army Ammunition Plant
Doyline LA 71023
Landholding Agency: Army
Property Number: 21199610176
Status: Unutilized
Directions:
Comments:
Reasons: Within 2000 ft. of flammable or explosive material; Secured Area

Building C–1345
Louisiana Army Ammunition Plant
Doyline LA 71023
Landholding Agency: Army
Property Number: 21199610178
Status: Unutilized
Directions:
Comments:
Reasons: Secured Area; Within 2000 ft. of flammable or explosive material

Building C–1337
Louisiana Army Ammunition Plant
Doyline LA 71023
Landholding Agency: Army
Property Number: 21199610179
Status: Unutilized
Directions:
Comments:
Reasons: Within 2000 ft. of flammable or explosive material; Secured Area

Building C–1333
Louisiana Army Ammunition Plant
Doyline LA 71023
Landholding Agency: Army
Property Number: 21199610180
Status: Unutilized
Directions:
Comments:
Reasons: Secured Area; Within 2000 ft. of flammable or explosive material

Building C–1331
Louisiana Army Ammunition Plant
Doyline LA 71023
Landholding Agency: Army
Property Number: 21199610181
Status: Unutilized
Directions:
Comments:
Reasons: Within 2000 ft. of flammable or explosive material; Secured Area

Building C–1321
Louisiana Army Ammunition Plant
Doyline LA 71023
Landholding Agency: Army
Property Number: 21199610182
Status: Unutilized
Directions:
Comments:
Reasons: Secured Area; Within 2000 ft. of flammable or explosive material

Building C–1307
Louisiana Army Ammunition Plant
Doyline LA 71023
Landholding Agency: Army
Property Number: 21199610183
Status: Unutilized
Directions:
Comments:
Reasons: Within 2000 ft. of flammable or explosive material; Secured Area

Building S–1648
Louisiana Army Ammunition Plant
Doyline LA 71023
Landholding Agency: Army
Property Number: 21199610184
Status: Underutilized
Directions:
Comments:
Reasons: Secured Area; Within 2000 ft. of flammable or explosive material

Building S–1640
Louisiana Army Ammunition Plant
Doyline LA 71023
Landholding Agency: Army
Property Number: 21199610185
Status: Underutilized
Directions:
Comments:
Reasons: Secured Area; Within 2000 ft. of flammable or explosive material

Building S–1625
Louisiana Army Ammunition Plant
Doyline LA 71023
Landholding Agency: Army
Property Number: 21199610186
Status: Underutilized
Directions:
Comments:
Reasons: Within 2000 ft. of flammable or explosive material; Secured Area

Building S–1608
Louisiana Army Ammunition Plant
Doyline LA 71023
Landholding Agency: Army
Property Number: 21199610187
Status: Underutilized
Directions:
Comments:
Reasons: Within 2000 ft. of flammable or explosive material; Secured Area

Building S–1619
Louisiana Army Ammunition Plant
Doyline LA 71023
Landholding Agency: Army
Property Number: 21199610191
Status: Underutilized
Directions:
Comments:
Reasons: Secured Area; Within 2000 ft. of flammable or explosive material

Building S–1617
Louisiana Army Ammunition Plant
Doyline LA 71023
Landholding Agency: Army
Property Number: 21199610192
Status: Underutilized
Directions:
Comments:
Reasons: Secured Area; Within 2000 ft. of flammable or explosive material

Building S–1611
Louisiana Army Ammunition Plant
Doyline LA 71023
Landholding Agency: Army
Property Number: 21199610193
Status: Underutilized
Directions:
Comments:
Reasons: Within 2000 ft. of flammable or explosive material; Secured Area

Building S–1610
Louisiana Army Ammunition Plant
Doyline LA 71023
Landholding Agency: Army
Property Number: 21199610194
Status: Underutilized
Directions:
Comments:
Reasons: Secured Area; Within 2000 ft. of flammable or explosive material

Building E–1720
Louisiana Army Ammunition Plant
Doyline LA 71023
Landholding Agency: Army
Property Number: 21199610196
Status: Unutilized
Directions:
Comments:
Reasons: Within 2000 ft. of flammable or explosive material; Secured Area

Building E–1710
Louisiana Army Ammunition Plant
Doyline LA 71023
Landholding Agency: Army
Property Number: 21199610198
Status: Unutilized
Directions:
Comments:
Reasons: Secured Area; Within 2000 ft. of flammable or explosive material

Building E–1709
Louisiana Army Ammunition Plant
Doyline LA 71023
Landholding Agency: Army
Property Number: 21199610199
Status: Unutilized
Directions:
Comments:
Reasons: Within 2000 ft. of flammable or explosive material; Secured Area

Building E–1707
Louisiana Army Ammunition Plant
Doyline LA 71023
Landholding Agency: Army
Property Number: 21199610200
Status: Unutilized
Directions:
Comments:
Reasons: Secured Area; Within 2000 ft. of flammable or explosive material

Building B–1475
Louisiana Army Ammunition Plant
Doyline LA 71023
Landholding Agency: Army
Property Number: 21199610201
Status: Unutilized
Directions:
Comments:
Reasons: Within 2000 ft. of flammable or explosive material; Secured Area

Building B–1471
Louisiana Army Ammunition Plant
Doyline LA 71023
Landholding Agency: Army
Property Number: 21199610202
Status: Unutilized

Directions:
Comments:
Reasons: Within 2000 ft. of flammable or explosive material; Secured Area

Building B–1426
Louisiana Army Ammunition Plant
Doyline LA 71023
Landholding Agency: Army
Property Number: 21199610203
Status: Unutilized
Directions:
Comments:
Reasons: Secured Area; Within 2000 ft. of flammable or explosive material

Building J–1018
Louisiana Army Ammunition Plant
Doyline LA 71023
Landholding Agency: Army
Property Number: 21199610204
Status: Unutilized
Directions:
Comments:
Reasons: Secured Area; Within 2000 ft. of flammable or explosive material

Building M–219
Louisiana Army Ammunition Plant
Doyline LA 71023
Landholding Agency: Army
Property Number: 21199610205
Status: Unutilized
Directions:
Comments:
Reasons: Secured Area; Within 2000 ft. of flammable or explosive material

Building Y–2609
Louisiana Army Ammunition Plant
Doyline LA 71023
Landholding Agency: Army
Property Number: 21199610206
Status: Unutilized
Directions:
Comments:
Reasons: Secured Area; Within 2000 ft. of flammable or explosive material

Building E–1726
Louisiana Army Ammunition Plant
Doyline LA 71023
Landholding Agency: Army
Property Number: 21199610210
Status: Unutilized
Directions:
Comments:
Reasons: Within 2000 ft. of flammable or explosive material; Secured Area

Building E–1724
Louisiana Army Ammunition Plant
Doyline LA 71023
Landholding Agency: Army
Property Number: 21199610211
Status: Unutilized
Directions:
Comments:
Reasons: Within 2000 ft. of flammable or explosive material; Secured Area

Building K–1115
Louisiana Army Ammunition Plant
Doyline LA 71023
Landholding Agency: Army
Property Number: 21199610212
Status: Unutilized
Directions:
Comments:
Reasons: Secured Area; Within 2000 ft. of flammable or explosive material

Building K–1114
Louisiana Army Ammunition Plant
Doyline LA 71023
Landholding Agency: Army
Property Number: 21199610213
Status: Unutilized
Directions:
Comments:
Reasons: Within 2000 ft. of flammable or explosive material; Secured Area

Building K–1112
Louisiana Army Ammunition Plant
Doyline LA 71023
Landholding Agency: Army
Property Number: 21199610214
Status: Unutilized
Directions:
Comments:
Reasons: Within 2000 ft. of flammable or explosive material; Secured Area

Building D–1220
Louisiana Army Ammunition Plant
Doyline LA 71023
Landholding Agency: Army
Property Number: 21199610215
Status: Unutilized
Directions:
Comments:
Reasons: Secured Area; Within 2000 ft. of flammable or explosive material

Building K–1117
Louisiana Army Ammunition Plant
Doyline LA 71023
Landholding Agency: Army
Property Number: 21199610216
Status: Unutilized
Directions:
Comments:
Reasons: Within 2000 ft. of flammable or explosive material; Secured Area

Building K–1106
Louisiana Army Ammunition Plant
Doyline LA 71023
Landholding Agency: Army
Property Number: 21199610217
Status: Unutilized
Directions:
Comments:
Reasons: Secured Area; Within 2000 ft. of flammable or explosive material

Building J–1013
Louisiana Army Ammunition Plant
Doyline LA 71023
Landholding Agency: Army
Property Number: 21199610219
Status: Unutilized
Directions:
Comments:
Reasons: Within 2000 ft. of flammable or explosive material; Secured Area

Building J–1007
Louisiana Army Ammunition Plant
Doyline LA 71023
Landholding Agency: Army
Property Number: 21199610220
Status: Unutilized
Directions:
Comments:
Reasons: Within 2000 ft. of flammable or explosive material; Secured Area

Building C–1335
Louisiana Army Ammunition Plant
Doyline LA 71023
Landholding Agency: Army
Property Number: 21199610221
Status: Unutilized
Directions:
Comments:
Reasons: Within 2000 ft. of flammable or explosive material; Secured Area

Building C–1334
Louisiana Army Ammunition Plant
Doyline LA 71023
Landholding Agency: Army
Property Number: 21199610222
Status: Unutilized
Directions:
Comments:
Reasons: Secured Area; Within 2000 ft. of flammable or explosive material

Building C–1325
Louisiana Army Ammunition Plant
Doyline LA 71023
Landholding Agency: Army
Property Number: 21199610223
Status: Unutilized
Directions:
Comments:
Reasons: Within 2000 ft. of flammable or explosive material; Secured Area

Building C–1313
Louisiana Army Ammunition Plant
Doyline LA 71023
Landholding Agency: Army
Property Number: 21199610224
Status: Unutilized
Directions:
Comments:
Reasons: Secured Area; Within 2000 ft. of flammable or explosive material

Building D–1228
Louisiana Army Ammunition Plant
Doyline LA 71023
Landholding Agency: Army
Property Number: 21199610225
Status: Unutilized
Directions:
Comments:
Reasons: Within 2000 ft. of flammable or explosive material; Secured Area

Building D–1233
Louisiana Army Ammunition Plant
Doyline LA 71023
Landholding Agency: Army
Property Number: 21199610226
Status: Unutilized
Directions:
Comments:
Reasons: Within 2000 ft. of flammable or explosive material; Secured Area

Building D–1227
Louisiana Army Ammunition Plant
Doyline LA 71023
Landholding Agency: Army
Property Number: 21199610227
Status: Unutilized
Directions:
Comments:
Reasons: Secured Area; Within 2000 ft. of flammable or explosive material

Building D–1217
Louisiana Army Ammunition Plant
Doyline LA 71023
Landholding Agency: Army
Property Number: 21199610228
Status: Unutilized
Directions:
Comments:
Reasons: Within 2000 ft. of flammable or explosive material; Secured Area

Building D–1226

Louisiana Army Ammunition Plant
Doyline LA 71023
Landholding Agency: Army
Property Number: 21199610229
Status: Unutilized
Directions:
Comments:
Reasons: Within 2000 ft. of flammable or explosive material; Secured Area

Building D–1207
Louisiana Army Ammunition Plant
Doyline LA 71023
Landholding Agency: Army
Property Number: 21199610230
Status: Unutilized
Directions:
Comments:
Reasons: Secured Area; Within 2000 ft. of flammable or explosive material

Building D–1222
Louisiana Army Ammunition Plant
Doyline LA 71023
Landholding Agency: Army
Property Number: 21199610231
Status: Unutilized
Directions:
Comments:
Reasons: Secured Area; Within 2000 ft. of flammable or explosive material

Building D–1261
Louisiana Army Ammunition Plant
Doyline LA 71023
Landholding Agency: Army
Property Number: 21199610232
Status: Unutilized
Directions:
Comments:
Reasons: Within 2000 ft. of flammable or explosive material; Secured Area

Building S–1623
Louisiana Army Ammunition Plant
Doyline LA 71023
Landholding Agency: Army
Property Number: 21199610233
Status: Unutilized
Directions:
Comments:
Reasons: Secured Area; Within 2000 ft. of flammable or explosive material

Building S–1622
Louisiana Army Ammunition Plant
Doyline LA 71023
Landholding Agency: Army
Property Number: 21199610234
Status: Unutilized
Directions:
Comments:
Reasons: Secured Area; Within 2000 ft. of flammable or explosive material

Building S–1616
Louisiana Army Ammunition Plant
Doyline LA 71023
Landholding Agency: Army
Property Number: 21199610235
Status: Unutilized
Directions:
Comments:
Reasons: Within 2000 ft. of flammable or explosive material; Secured Area

Building E–1716
Louisiana Army Ammunition Plant
Doyline LA 71023
Landholding Agency: Army
Property Number: 21199610236
Status: Unutilized
Directions:
Comments:
Reasons: Within 2000 ft. of flammable or explosive material; Secured Area

Building D–1242
Louisiana Army Ammunition Plant
Doyline LA 71023
Landholding Agency: Army
Property Number: 21199610237
Status: Unutilized
Directions:
Comments:
Reasons: Within 2000 ft. of flammable or explosive material; Secured Area

Building D–1223
Louisiana Army Ammunition Plant
Doyline LA 71023
Landholding Agency: Army
Property Number: 21199610238
Status: Unutilized
Directions:
Comments:
Reasons: Secured Area; Within 2000 ft. of flammable or explosive material

Building C–1330
Louisiana Army Ammunition Plant
Doyline LA 71023
Landholding Agency: Army
Property Number: 21199610239
Status: Unutilized
Directions:
Comments:
Reasons: Within 2000 ft. of flammable or explosive material; Secured Area

Building C–1305
Louisiana Army Ammunition Plant
Doyline LA 71023
Landholding Agency: Army
Property Number: 21199610240
Status: Unutilized
Directions:
Comments:
Reasons: Within 2000 ft. of flammable or explosive material; Secured Area

4 Buildings
Louisiana Army Ammunition Plant
Doyline LA 71023
Landholding Agency: Army
Property Number: 21199610241
Status: Unutilized
Directions: S1631, S1632, S1633, S1634
Comments:
Reasons: Within 2000 ft. of flammable or explosive material; Secured Area

Building D–1238
Louisiana Army Ammunition Plant
Doyline LA 71023
Landholding Agency: Army
Property Number: 21199610242
Status: Unutilized
Directions:
Comments:
Reasons: Within 2000 ft. of flammable or explosive material; Secured Area

Building B–1435
Louisiana Army Ammunition Plant
Doyline LA 71023
Landholding Agency: Army
Property Number: 21199610245
Status: Unutilized
Directions:
Comments:
Reasons: Within 2000 ft. of flammable or explosive material; Secured Area

Building X–5053
Louisiana Army Ammunition Plant
Doyline LA 71023
Landholding Agency: Army
Property Number: 21199610251
Status: Unutilized
Directions:
Comments:
Reasons: Within 2000 ft. of flammable or explosive material; Secured Area

Building N–1817
Louisiana Army Ammunition Plant
Doyline LA 71023
Landholding Agency: Army
Property Number: 21199610252
Status: Unutilized
Directions:
Comments:
Reasons: Secured Area; Within 2000 ft. of flammable or explosive material

Building E–1712
Louisiana Army Ammunition Plant
Doyline LA 71023
Landholding Agency: Army
Property Number: 21199610253
Status: Unutilized
Directions:
Comments:
Reasons: Within 2000 ft. of flammable or explosive material; Secured Area

Building B–1476
Louisiana Army Ammunition Plant
Doyline LA 71023
Landholding Agency: Army
Property Number: 21199610254
Status: Unutilized
Directions:
Comments:
Reasons: Secured Area; Within 2000 ft. of flammable or explosive material

Building M–2100
Louisiana Army Ammunition Plant
Doyline LA 71023
Landholding Agency: Army
Property Number: 21199610255
Status: Unutilized
Directions:
Comments:
Reasons: Secured Area; Within 2000 ft. of flammable or explosive material

Building M–0600
Louisiana Army Ammunition Plant
Doyline LA 71023
Landholding Agency: Army
Property Number: 21199610256
Status: Unutilized
Directions:
Comments:
Reasons: Secured Area; Within 2000 ft. of flammable or explosive material

Building M–0200
Louisiana Army Ammunition Plant
Doyline LA 71023
Landholding Agency: Army
Property Number: 21199610257
Status: Unutilized
Directions:
Comments:
Reasons: Within 2000 ft. of flammable or explosive material; Secured Area

Building L–2346
Louisiana Army Ammunition Plant
Doyline LA 71023
Landholding Agency: Army
Property Number: 21199610258
Status: Unutilized

Directions:
Comments:
Reasons: Secured Area; Within 2000 ft. of flammable or explosive material

Building L–2200
Louisiana Army Ammunition Plant
Doyline LA 71023
Landholding Agency: Army
Property Number: 21199610259
Status: Unutilized
Directions:
Comments:
Reasons: Secured Area; Within 2000 ft. of flammable or explosive material

Building L–0700
Louisiana Army Ammunition Plant
Doyline LA 71023
Landholding Agency: Army
Property Number: 21199610260
Status: Unutilized
Directions:
Comments:
Reasons: Within 2000 ft. of flammable or explosive material; Secured Area

Building K–1102
Louisiana Army Ammunition Plant
Doyline LA 71023
Landholding Agency: Army
Property Number: 21199610263
Status: Unutilized
Directions:
Comments:
Reasons: Within 2000 ft. of flammable or explosive material; Secured Area

Building K–1119
Louisiana Army Ammunition Plant
Doyline LA 71023
Landholding Agency: Army
Property Number: 21199620002
Status: Unutilized
Directions:
Comments:
Reasons: Secured Area; Within 2000 ft. of flammable or explosive material

Building A–0150
Louisiana Army Ammunition Plant
Doyline LA 71023
Landholding Agency: Army
Property Number: 21199620006
Status: Unutilized
Directions:
Comments:
Reasons: Within 2000 ft. of flammable or explosive material; Secured Area

Building M–2109
Louisiana Army Ammunition Plant
Doyline LA 71023
Landholding Agency: Army
Property Number: 21199620008
Status: Unutilized
Directions:
Comments:
Reasons: Within 2000 ft. of flammable or explosive material; Secured Area

Building M–2108
Louisiana Army Ammunition Plant
Doyline LA 71023
Landholding Agency: Army
Property Number: 21199620009
Status: Unutilized
Directions:
Comments:
Reasons: Secured Area; Within 2000 ft. of flammable or explosive material

Building M–2107
Louisiana Army Ammunition Plant
Doyline LA 71023
Landholding Agency: Army
Property Number: 21199620010
Status: Unutilized
Directions:
Comments:
Reasons: Within 2000 ft. of flammable or explosive material; Secured Area

Building J–1009
Louisiana Army Ammunition Plant
Doyline LA 71023
Landholding Agency: Army
Property Number: 21199620011
Status: Unutilized
Directions:
Comments:
Reasons: Within 2000 ft. of flammable or explosive material; Secured Area

Building J–1004
Louisiana Army Ammunition Plant
Doyline LA 71023
Landholding Agency: Army
Property Number: 21199620012
Status: Unutilized
Directions:
Comments:
Reasons: Within 2000 ft. of flammable or explosive material; Secured Area

Building C–1368
Louisiana Army Ammunition Plant
Doyline LA 71023
Landholding Agency: Army
Property Number: 21199620020
Status: Unutilized
Directions:
Comments:
Reasons: Secured Area; Within 2000 ft. of flammable or explosive material

Building D–1260
Louisiana Army Ammunition Plant
Doyline LA 71023
Landholding Agency: Army
Property Number: 21199620021
Status: Unutilized
Directions:
Comments:
Reasons: Secured Area; Within 2000 ft. of flammable or explosive material

Building C–1369
Louisiana Army Ammunition Plant
Doyline LA 71023
Landholding Agency: Army
Property Number: 21199620022
Status: Unutilized
Directions:
Comments:
Reasons: Within 2000 ft. of flammable or explosive material; Secured Area

Building B–1414
Louisiana Army Ammunition Plant
Doyline LA 71023
Landholding Agency: Army
Property Number: 21199620025
Status: Unutilized
Directions:
Comments:
Reasons: Within 2000 ft. of flammable or explosive material; Secured Area

Building C–1340
Louisiana Army Ammunition Plant
Doyline LA 71023
Landholding Agency: Army
Property Number: 21199620026
Status: Unutilized
Directions:
Comments:
Reasons: Within 2000 ft. of flammable or explosive material; Secured Area

Building X–5103
Louisiana Army Ammunition Plant
Doyline LA 71023
Landholding Agency: Army
Property Number: 21199620027
Status: Unutilized
Directions:
Comments:
Reasons: Secured Area; Within 2000 ft. of flammable or explosive material

Building D–1234
Louisiana Army Ammunition Plant
Doyline LA 71023
Landholding Agency: Army
Property Number: 21199620029
Status: Unutilized
Directions:
Comments:
Reasons: Secured Area; Within 2000 ft. of flammable or explosive material

Building S–1630
Louisiana Army Ammunition Plant
Doyline LA 71023
Landholding Agency: Army
Property Number: 21199620032
Status: Unutilized
Directions:
Comments:
Reasons: Within 2000 ft. of flammable or explosive material; Secured Area

Building J–1003
Louisiana Army Ammunition Plant
Doyline LA 71023
Landholding Agency: Army
Property Number: 21199620033
Status: Unutilized
Directions:
Comments:
Reasons: Secured Area; Within 2000 ft. of flammable or explosive material

Building N–1800
Louisiana Army Ammunition Plant
Doyline LA 71023
Landholding Agency: Army
Property Number: 21199620034
Status: Unutilized
Directions:
Comments:
Reasons: Within 2000 ft. of flammable or explosive material; Secured Area

Building X–5072
Louisiana Army Ammunition Plant
Doyline LA 71023
Landholding Agency: Army
Property Number: 21199620035
Status: Unutilized
Directions:
Comments:
Reasons: Secured Area; Within 2000 ft. of flammable or explosive material

Building J–1016
Louisiana Army Ammunition Plant
Doyline LA 71023
Landholding Agency: Army
Property Number: 21199620036
Status: Unutilized
Directions:
Comments:
Reasons: Within 2000 ft. of flammable or explosive material; Secured Area

Building O–1500

Louisiana Army Ammunition Plant
Doyline LA 71023
Landholding Agency: Army
Property Number: 21199620037
Status: Unutilized
Directions:
Comments:
Reasons: Within 2000 ft. of flammable or explosive material; Secured Area

Building X–5000
Louisiana Army Ammunition Plant
Doyline LA 71023
Landholding Agency: Army
Property Number: 21199620038
Status: Unutilized
Directions:
Comments:
Reasons: Within 2000 ft. of flammable or explosive material; Secured Area

Building O–1501
Louisiana Army Ammunition Plant
Doyline LA 71023
Landholding Agency: Army
Property Number: 21199620039
Status: Unutilized
Directions:
Comments:
Reasons: Secured Area; Within 2000 ft. of flammable or explosive material

Building D–1218
Louisiana Army Ammunition Plant
Doyline LA 71023
Landholding Agency: Army
Property Number: 21199620042
Status: Unutilized
Directions:
Comments:
Reasons: Secured Area; Within 2000 ft. of flammable or explosive material

Building D–1216
Louisiana Army Ammunition Plant
Doyline LA 71023
Landholding Agency: Army
Property Number: 21199620043
Status: Unutilized
Directions:
Comments:
Reasons: Within 2000 ft. of flammable or explosive material; Secured Area

Building D–1213
Louisiana Army Ammunition Plant
Doyline LA 71023
Landholding Agency: Army
Property Number: 21199620044
Status: Unutilized
Directions:
Comments:
Reasons: Secured Area; Within 2000 ft. of flammable or explosive material

Building D–1211
Louisiana Army Ammunition Plant
Doyline LA 71023
Landholding Agency: Army
Property Number: 21199620045
Status: Unutilized
Directions:
Comments:
Reasons: Within 2000 ft. of flammable or explosive material; Secured Area

Building D–1209
Louisiana Army Ammunition Plant
Doyline LA 71023
Landholding Agency: Army
Property Number: 21199620046
Status: Unutilized
Directions:
Comments:
Reasons: Secured Area; Within 2000 ft. of flammable or explosive material

Building D–1208
Louisiana Army Ammunition Plant
Doyline LA 71023
Landholding Agency: Army
Property Number: 21199620047
Status: Unutilized
Directions:
Comments:
Reasons: Secured Area; Within 2000 ft. of flammable or explosive material

Building C–1327
Louisiana Army Ammunition Plant
Doyline LA 71023
Landholding Agency: Army
Property Number: 21199620048
Status: Unutilized
Directions:
Comments:
Reasons: Secured Area; Within 2000 ft. of flammable or explosive material

Building C–1326
Louisiana Army Ammunition Plant
Doyline LA 71023
Landholding Agency: Army
Property Number: 21199620049
Status: Unutilized
Directions:
Comments:
Reasons: Secured Area; Within 2000 ft. of flammable or explosive material

Building C–1324
Louisiana Army Ammunition Plant
Doyline LA 71023
Landholding Agency: Army
Property Number: 21199620050
Status: Unutilized
Directions:
Comments:
Reasons: Within 2000 ft. of flammable or explosive material; Secured Area

Building C–1339
Louisiana Army Ammunition Plant
Doyline LA 71023
Landholding Agency: Army
Property Number: 21199620051
Status: Unutilized
Directions:
Comments:
Reasons: Within 2000 ft. of flammable or explosive material; Secured Area

Building C–1336
Louisiana Army Ammunition Plant
Doyline LA 71023
Landholding Agency: Army
Property Number: 21199620052
Status: Unutilized
Directions:
Comments:
Reasons: Secured Area; Within 2000 ft. of flammable or explosive material

Building C–1320
Louisiana Army Ammunition Plant
Doyline LA 71023
Landholding Agency: Army
Property Number: 21199620053
Status: Unutilized
Directions:
Comments:
Reasons: Within 2000 ft. of flammable or explosive material; Secured Area

Building K–1116
Louisiana Army Ammunition Plant
Doyline LA 71023
Landholding Agency: Army
Property Number: 21199620054
Status: Unutilized
Directions:
Comments:
Reasons: Secured Area; Within 2000 ft. of flammable or explosive material

Building K–1118
Louisiana Army Ammunition Plant
Doyline LA 71023
Landholding Agency: Army
Property Number: 21199620055
Status: Unutilized
Directions:
Comments:
Reasons: Within 2000 ft. of flammable or explosive material; Secured Area

Building K–1113
Louisiana Army Ammunition Plant
Doyline LA 71023
Landholding Agency: Army
Property Number: 21199620056
Status: Unutilized
Directions:
Comments:
Reasons: Secured Area; Within 2000 ft. of flammable or explosive material

Building S–1628
Louisiana Army Ammunition Plant
Doyline LA 71023
Landholding Agency: Army
Property Number: 21199620057
Status: Unutilized
Directions:
Comments:
Reasons: Secured Area; Within 2000 ft. of flammable or explosive material

Building D–1230
Louisiana Army Ammunition Plant
Doyline LA 71023
Landholding Agency: Army
Property Number: 21199620058
Status: Unutilized
Directions:
Comments:
Reasons: Within 2000 ft. of flammable or explosive material; Secured Area

Building D–1214
Louisiana Army Ammunition Plant
Doyline LA 71023
Landholding Agency: Army
Property Number: 21199620059
Status: Unutilized
Directions:
Comments:
Reasons: Secured Area; Within 2000 ft. of flammable or explosive material

Building D–1229
Louisiana Army Ammunition Plant
Doyline LA 71023
Landholding Agency: Army
Property Number: 21199620060
Status: Unutilized
Directions:
Comments:
Reasons: Within 2000 ft. of flammable or explosive material; Secured Area

Building E–1713
Louisiana Army Ammunition Plant
Doyline LA 71023
Landholding Agency: Army
Property Number: 21199620061
Status: Unutilized

Directions:
Comments:
Reasons: Secured Area; Within 2000 ft. of flammable or explosive material

Building E–1711
Louisiana Army Ammunition Plant
Doyline LA 71023
Landholding Agency: Army
Property Number: 21199620062
Status: Unutilized
Directions:
Comments:
Reasons: Secured Area; Within 2000 ft. of flammable or explosive material

Building E–1722
Louisiana Army Ammunition Plant
Doyline LA 71023
Landholding Agency: Army
Property Number: 21199620063
Status: Unutilized
Directions:
Comments:
Reasons: Within 2000 ft. of flammable or explosive material; Secured Area

Building E–1721
Louisiana Army Ammunition Plant
Doyline LA 71023
Landholding Agency: Army
Property Number: 21199620064
Status: Unutilized
Directions:
Comments:
Reasons: Secured Area; Within 2000 ft. of flammable or explosive material

Building E–1718
Louisiana Army Ammunition Plant
Doyline LA 71023
Landholding Agency: Army
Property Number: 21199620065
Status: Unutilized
Directions:
Comments:
Reasons: Secured Area; Within 2000 ft. of flammable or explosive material

Building E–1714
Louisiana Army Ammunition Plant
Doyline LA 71023
Landholding Agency: Army
Property Number: 21199620066
Status: Unutilized
Directions:
Comments:
Reasons: Within 2000 ft. of flammable or explosive material; Secured Area

Building C–1316
Louisiana Army Ammunition Plant
Doyline LA 71023
Landholding Agency: Army
Property Number: 21199620068
Status: Unutilized
Directions:
Comments:
Reasons: Within 2000 ft. of flammable or explosive material; Secured Area

Building C–1318
Louisiana Army Ammunition Plant
Doyline LA 71023
Landholding Agency: Army
Property Number: 21199620070
Status: Unutilized
Directions:
Comments:
Reasons: Within 2000 ft. of flammable or explosive material; Secured Area

Building C–1312
Louisiana Army Ammunition Plant
Doyline LA 71023
Landholding Agency: Army
Property Number: 21199620073
Status: Unutilized
Directions:
Comments:
Reasons: Within 2000 ft. of flammable or explosive material; Secured Area

Building C–1311
Louisiana Army Ammunition Plant
Doyline LA 71023
Landholding Agency: Army
Property Number: 21199620074
Status: Unutilized
Directions:
Comments:
Reasons: Within 2000 ft. of flammable or explosive material; Secured Area

Building C–1308
Louisiana Army Ammunition Plant
Doyline LA 71023
Landholding Agency: Army
Property Number: 21199620075
Status: Unutilized
Directions:
Comments:
Reasons: Within 2000 ft. of flammable or explosive material; Secured Area

Building C–1315
Louisiana Army Ammunition Plant
Doyline LA 71023
Landholding Agency: Army
Property Number: 21199620076
Status: Unutilized
Directions:
Comments:
Reasons: Within 2000 ft. of flammable or explosive material; Secured Area

Building K–1123
Louisiana Army Ammunition Plant
Doyline LA 71023
Landholding Agency: Army
Property Number: 21199620081
Status: Unutilized
Directions:
Comments:
Reasons: Secured Area; Within 2000 ft. of flammable or explosive material

Building M–0634
Louisiana Army Ammunition Plant
Doyline LA 71023
Landholding Agency: Army
Property Number: 21199620084
Status: Unutilized
Directions:
Comments:
Reasons: Secured Area; Within 2000 ft. of flammable or explosive material

Building M–0633
Louisiana Army Ammunition Plant
Doyline LA 71023
Landholding Agency: Army
Property Number: 21199620085
Status: Unutilized
Directions:
Comments:
Reasons: Within 2000 ft. of flammable or explosive material; Secured Area

Building M–0632
Louisiana Army Ammunition Plant
Doyline LA 71023
Landholding Agency: Army
Property Number: 21199620086
Status: Unutilized
Directions:
Comments:
Reasons: Within 2000 ft. of flammable or explosive material; Secured Area

Building K–1107
Louisiana Army Ammunition Plant
Doyline LA 71023
Landholding Agency: Army
Property Number: 21199620087
Status: Unutilized
Directions:
Comments:
Reasons: Secured Area; Within 2000 ft. of flammable or explosive material

Building B–1473
Louisiana Army Ammunition Plant
Doyline LA 71023
Landholding Agency: Army
Property Number: 21199620089
Status: Unutilized
Directions:
Comments:
Reasons: Within 2000 ft. of flammable or explosive material; Secured Area

Building M–0635
Louisiana Army Ammunition Plant
Doyline LA 71023
Landholding Agency: Army
Property Number: 21199620092
Status: Unutilized
Directions:
Comments:
Reasons: Secured Area; Within 2000 ft. of flammable or explosive material

Building K–1108
Louisiana Army Ammunition Plant
Doyline LA 71023
Landholding Agency: Army
Property Number: 21199620093
Status: Unutilized
Directions:
Comments:
Reasons: Within 2000 ft. of flammable or explosive material; Secured Area

Building M–0205
Louisiana Army Ammunition Plant
Doyline LA 71023
Landholding Agency: Army
Property Number: 21199620094
Status: Unutilized
Directions:
Comments:
Reasons: Secured Area; Within 2000 ft. of flammable or explosive material

Building M–0203
Louisiana Army Ammunition Plant
Doyline LA 71023
Landholding Agency: Army
Property Number: 21199620095
Status: Unutilized
Directions:
Comments:
Reasons: Secured Area; Within 2000 ft. of flammable or explosive material

Building M–0204
Louisiana Army Ammunition Plant
Doyline LA 71023
Landholding Agency: Army
Property Number: 21199620096
Status: Unutilized
Directions:
Comments:
Reasons: Within 2000 ft. of flammable or explosive material; Secured Area

Building S–1607

Louisiana Army Ammunition Plant
Doyline LA 71023
Landholding Agency: Army
Property Number: 21199620097
Status: Unutilized
Directions:
Comments:
Reasons: Within 2000 ft. of flammable or explosive material; Secured Area

Building C–1304
Louisiana Army Ammunition Plant
Doyline LA 71023
Landholding Agency: Army
Property Number: 21199620098
Status: Unutilized
Directions:
Comments:
Reasons: Within 2000 ft. of flammable or explosive material; Secured Area

Building M–0647
Louisiana Army Ammunition Plant
Doyline LA 71023
Landholding Agency: Army
Property Number: 21199620102
Status: Unutilized
Directions:
Comments:
Reasons: Within 2000 ft. of flammable or explosive material; Secured Area

Building M–0646
Louisiana Army Ammunition Plant
Doyline LA 71023
Landholding Agency: Army
Property Number: 21199620104
Status: Unutilized
Directions:
Comments:
Reasons: Secured Area; Within 2000 ft. of flammable or explosive material

Building B–1424
Louisiana Army Ammunition Plant
Doyline LA 71023
Landholding Agency: Army
Property Number: 21199620105
Status: Unutilized
Directions:
Comments:
Reasons: Within 2000 ft. of flammable or explosive material; Secured Area

Building B–1456
Louisiana Army Ammunition Plant
Doyline LA 71023
Landholding Agency: Army
Property Number: 21199620106
Status: Unutilized
Directions:
Comments:
Reasons: Secured Area; Within 2000 ft. of flammable or explosive material

Building B–1457
Louisiana Army Ammunition Plant
Doyline LA 71023
Landholding Agency: Army
Property Number: 21199620107
Status: Unutilized
Directions:
Comments:
Reasons: Secured Area; Within 2000 ft. of flammable or explosive material

Building B–1458
Louisiana Army Ammunition Plant
Doyline LA 71023
Landholding Agency: Army
Property Number: 21199620108
Status: Unutilized
Directions:
Comments:
Reasons: Within 2000 ft. of flammable or explosive material; Secured Area

Building C–1306
Louisiana Army Ammunition Plant
Doyline LA 71023
Landholding Agency: Army
Property Number: 21199620111
Status: Unutilized
Directions:
Comments:
Reasons: Secured Area; Within 2000 ft. of flammable or explosive material

Building E–1725
Louisiana Army Ammunition Plant
Doyline LA 71023
Landholding Agency: Army
Property Number: 21199620113
Status: Unutilized
Directions:
Comments:
Reasons: Secured Area; Within 2000 ft. of flammable or explosive material

Building B–1449
Louisiana Army Ammunition Plant
Doyline LA 71023
Landholding Agency: Army
Property Number: 21199620117
Status: Unutilized
Directions:
Comments:
Reasons: Secured Area; Within 2000 ft. of flammable or explosive material

Building B–1443
Louisiana Army Ammunition Plant
Doyline LA 71023
Landholding Agency: Army
Property Number: 21199620118
Status: Unutilized
Directions:
Comments:
Reasons: Within 2000 ft. of flammable or explosive material; Secured Area

Building S–1609
Louisiana Army Ammunition Plant
Doyline LA 71023
Landholding Agency: Army
Property Number: 21199620119
Status: Unutilized
Directions:
Comments:
Reasons: Within 2000 ft. of flammable or explosive material; Secured Area

Building K–1121
Louisiana Army Ammunition Plant
Doyline LA 71023
Landholding Agency: Army
Property Number: 21199620120
Status: Unutilized
Directions:
Comments:
Reasons: Secured Area; Within 2000 ft. of flammable or explosive material

Building M–0612
Louisiana Army Ammunition Plant
Doyline LA 71023
Landholding Agency: Army
Property Number: 21199620124
Status: Unutilized
Directions:
Comments:
Reasons: Secured Area; Within 2000 ft. of flammable or explosive material

Building M–0611
Louisiana Army Ammunition Plant
Doyline LA 71023
Landholding Agency: Army
Property Number: 21199620125
Status: Unutilized
Directions:
Comments:
Reasons: Secured Area; Within 2000 ft. of flammable or explosive material

Building M–0610
Louisiana Army Ammunition Plant
Doyline LA 71023
Landholding Agency: Army
Property Number: 21199620126
Status: Unutilized
Directions:
Comments:
Reasons: Within 2000 ft. of flammable or explosive material; Secured Area

Building M–0609
Louisiana Army Ammunition Plant
Doyline LA 71023
Landholding Agency: Army
Property Number: 21199620127
Status: Unutilized
Directions:
Comments:
Reasons: Secured Area; Within 2000 ft. of flammable or explosive material

Building M–0613
Louisiana Army Ammunition Plant
Doyline LA 71023
Landholding Agency: Army
Property Number: 21199620128
Status: Unutilized
Directions:
Comments:
Reasons: Within 2000 ft. of flammable or explosive material; Secured Area

Building M–0607
Louisiana Army Ammunition Plant
Doyline LA 71023
Landholding Agency: Army
Property Number: 21199620129
Status: Unutilized
Directions:
Comments:
Reasons: Within 2000 ft. of flammable or explosive material; Secured Area

Building M–0606
Louisiana Army Ammunition Plant
Doyline LA 71023
Landholding Agency: Army
Property Number: 21199620130
Status: Unutilized
Directions:
Comments:
Reasons: Within 2000 ft. of flammable or explosive material; Secured Area

Building M–0605
Louisiana Army Ammunition Plant
Doyline LA 71023
Landholding Agency: Army
Property Number: 21199620131
Status: Unutilized
Directions:
Comments:
Reasons: Secured Area; Within 2000 ft. of flammable or explosive material

Building M–0604
Louisiana Army Ammunition Plant
Doyline LA 71023
Landholding Agency: Army
Property Number: 21199620132
Status: Unutilized

Directions:
Comments:
Reasons: Secured Area; Within 2000 ft. of flammable or explosive material

Building M–0603
Louisiana Army Ammunition Plant
Doyline LA 71023
Landholding Agency: Army
Property Number: 21199620133
Status: Unutilized
Directions:
Comments:
Reasons: Within 2000 ft. of flammable or explosive material; Secured Area

Building M–0211
Louisiana Army Ammunition Plant
Doyline LA 71023
Landholding Agency: Army
Property Number: 21199620134
Status: Unutilized
Directions:
Comments:
Reasons: Within 2000 ft. of flammable or explosive material; Secured Area

Building M–0210
Louisiana Army Ammunition Plant
Doyline LA 71023
Landholding Agency: Army
Property Number: 21199620136
Status: Unutilized
Directions:
Comments:
Reasons: Secured Area; Within 2000 ft. of flammable or explosive material

Building M–0207
Louisiana Army Ammunition Plant
Doyline LA 71023
Landholding Agency: Army
Property Number: 21199620137
Status: Unutilized
Directions:
Comments:
Reasons: Secured Area; Within 2000 ft. of flammable or explosive material

Building M–0206
Louisiana Army Ammunition Plant
Doyline LA 71023
Landholding Agency: Army
Property Number: 21199620138
Status: Unutilized
Directions:
Comments:
Reasons: Secured Area; Within 2000 ft. of flammable or explosive material

Building M–2110
Louisiana Army Ammunition Plant
Doyline LA 71023
Landholding Agency: Army
Property Number: 21199620139
Status: Unutilized
Directions:
Comments:
Reasons: Within 2000 ft. of flammable or explosive material; Secured Area

Building M–2105
Louisiana Army Ammunition Plant
Doyline LA 71023
Landholding Agency: Army
Property Number: 21199620140
Status: Unutilized
Directions:
Comments:
Reasons: Within 2000 ft. of flammable or explosive material; Secured Area

Building M–2104
Louisiana Army Ammunition Plant
Doyline LA 71023
Landholding Agency: Army
Property Number: 21199620141
Status: Unutilized
Directions:
Comments:
Reasons: Secured Area; Within 2000 ft. of flammable or explosive material

Building M–2103
Louisiana Army Ammunition Plant
Doyline LA 71023
Landholding Agency: Army
Property Number: 21199620142
Status: Unutilized
Directions:
Comments:
Reasons: Within 2000 ft. of flammable or explosive material; Secured Area

Building M–2102
Louisiana Army Ammunition Plant
Doyline LA 71023
Landholding Agency: Army
Property Number: 21199620143
Status: Unutilized
Directions:
Comments:
Reasons: Within 2000 ft. of flammable or explosive material; Secured Area

Building M–2101
Louisiana Army Ammunition Plant
Doyline LA 71023
Landholding Agency: Army
Property Number: 21199620144
Status: Unutilized
Directions:
Comments:
Reasons: Within 2000 ft. of flammable or explosive material; Secured Area

Building X–5070
Louisiana Army Ammunition Plant
Doyline LA 71023
Landholding Agency: Army
Property Number: 21199620145
Status: Unutilized
Directions:
Comments:
Reasons: Secured Area; Within 2000 ft. of flammable or explosive material

Building X–5100
Louisiana Army Ammunition Plant
Doyline LA 71023
Landholding Agency: Army
Property Number: 21199620146
Status: Unutilized
Directions:
Comments:
Reasons: Secured Area; Within 2000 ft. of flammable or explosive material

Building B–1463
Louisiana Army Ammunition Plant
Doyline LA 71023
Landholding Agency: Army
Property Number: 21199620149
Status: Unutilized
Directions:
Comments:
Reasons: Within 2000 ft. of flammable or explosive material; Secured Area

Building N–1814
Louisiana Army Ammunition Plant
Doyline LA 71023
Landholding Agency: Army
Property Number: 21199620150
Status: Unutilized
Directions:
Comments:
Reasons: Secured Area; Within 2000 ft. of flammable or explosive material

Building N–1815
Louisiana Army Ammunition Plant
Doyline LA 71023
Landholding Agency: Army
Property Number: 21199620151
Status: Unutilized
Directions:
Comments:
Reasons: Within 2000 ft. of flammable or explosive material; Secured Area

Building Y–2612
Louisiana Army Ammunition Plant
Doyline LA 71023
Landholding Agency: Army
Property Number: 21199620152
Status: Unutilized
Directions:
Comments:
Reasons: Secured Area; Within 2000 ft. of flammable or explosive material

Building A–0151
Louisiana Army Ammunition Plant
Doyline LA 71023
Landholding Agency: Army
Property Number: 21199620153
Status: Unutilized
Directions:
Comments:
Reasons: Within 2000 ft. of flammable or explosive material; Secured Area

Building L–2220
Louisiana Army Ammunition Plant
Doyline LA 71023
Landholding Agency: Army
Property Number: 21199620173
Status: Unutilized
Directions:
Comments:
Reasons: Secured Area; Within 2000 ft. of flammable or explosive material

Building L–2219
Louisiana Army Ammunition Plant
Doyline LA 71023
Landholding Agency: Army
Property Number: 21199620174
Status: Unutilized
Directions:
Comments:
Reasons: Within 2000 ft. of flammable or explosive material; Secured Area

Building L–2218
Louisiana Army Ammunition Plant
Doyline LA 71023
Landholding Agency: Army
Property Number: 21199620175
Status: Unutilized
Directions:
Comments:
Reasons: Within 2000 ft. of flammable or explosive material; Secured Area

Building L–2217
Louisiana Army Ammunition Plant
Doyline LA 71023
Landholding Agency: Army
Property Number: 21199620176
Status: Unutilized
Directions:
Comments:
Reasons: Within 2000 ft. of flammable or explosive material; Secured Area

Building L–2221

Louisiana Army Ammunition Plant
Doyline LA 71023
Landholding Agency: Army
Property Number: 21199620177
Status: Unutilized
Directions:
Comments:
Reasons: Within 2000 ft. of flammable or explosive material; Secured Area

Building L–2216
Louisiana Army Ammunition Plant
Doyline LA 71023
Landholding Agency: Army
Property Number: 21199620178
Status: Unutilized
Directions:
Comments:
Reasons: Within 2000 ft. of flammable or explosive material; Secured Area

Building L–2215
Louisiana Army Ammunition Plant
Doyline LA 71023
Landholding Agency: Army
Property Number: 21199620179
Status: Unutilized
Directions:
Comments:
Reasons: Within 2000 ft. of flammable or explosive material; Secured Area

Building L–2213
Louisiana Army Ammunition Plant
Doyline LA 71023
Landholding Agency: Army
Property Number: 21199620180
Status: Unutilized
Directions:
Comments:
Reasons: Secured Area; Within 2000 ft. of flammable or explosive material

Building L–2214
Louisiana Army Ammunition Plant
Doyline LA 71023
Landholding Agency: Army
Property Number: 21199620181
Status: Unutilized
Directions:
Comments:
Reasons: Secured Area; Within 2000 ft. of flammable or explosive material

Building L–2212
Louisiana Army Ammunition Plant
Doyline LA 71023
Landholding Agency: Army
Property Number: 21199620182
Status: Unutilized
Directions:
Comments:
Reasons: Secured Area; Within 2000 ft. of flammable or explosive material

Building L–2211
Louisiana Army Ammunition Plant
Doyline LA 71023
Landholding Agency: Army
Property Number: 21199620183
Status: Unutilized
Directions:
Comments:
Reasons: Secured Area; Within 2000 ft. of flammable or explosive material

Building L–2210
Louisiana Army Ammunition Plant
Doyline LA 71023
Landholding Agency: Army
Property Number: 21199620184
Status: Unutilized
Directions:
Comments:
Reasons: Within 2000 ft. of flammable or explosive material; Secured Area

Building L–2209
Louisiana Army Ammunition Plant
Doyline LA 71023
Landholding Agency: Army
Property Number: 21199620185
Status: Unutilized
Directions:
Comments:
Reasons: Within 2000 ft. of flammable or explosive material; Secured Area

Building L–2208
Louisiana Army Ammunition Plant
Doyline LA 71023
Landholding Agency: Army
Property Number: 21199620186
Status: Unutilized
Directions:
Comments:
Reasons: Within 2000 ft. of flammable or explosive material; Secured Area

Building L–2249
Louisiana Army Ammunition Plant
Doyline LA 71023
Landholding Agency: Army
Property Number: 21199620187
Status: Unutilized
Directions:
Comments:
Reasons: Within 2000 ft. of flammable or explosive material; Secured Area

Building L–2238
Louisiana Army Ammunition Plant
Doyline LA 71023
Landholding Agency: Army
Property Number: 21199620188
Status: Unutilized
Directions:
Comments:
Reasons: Within 2000 ft. of flammable or explosive material; Secured Area

Building L–2236
Louisiana Army Ammunition Plant
Doyline LA 71023
Landholding Agency: Army
Property Number: 21199620189
Status: Unutilized
Directions:
Comments:
Reasons: Secured Area; Within 2000 ft. of flammable or explosive material

Building L–2250
Louisiana Army Ammunition Plant
Doyline LA 71023
Landholding Agency: Army
Property Number: 21199620190
Status: Unutilized
Directions:
Comments:
Reasons: Within 2000 ft. of flammable or explosive material; Secured Area

Building L–2235
Louisiana Army Ammunition Plant
Doyline LA 71023
Landholding Agency: Army
Property Number: 21199620191
Status: Unutilized
Directions:
Comments:
Reasons: Within 2000 ft. of flammable or explosive material; Secured Area

Building L–2233
Louisiana Army Ammunition Plant
Doyline LA 71023
Landholding Agency: Army
Property Number: 21199620192
Status: Unutilized
Directions:
Comments:
Reasons: Secured Area; Within 2000 ft. of flammable or explosive material

Building L–2232
Louisiana Army Ammunition Plant
Doyline LA 71023
Landholding Agency: Army
Property Number: 21199620193
Status: Unutilized
Directions:
Comments:
Reasons: Within 2000 ft. of flammable or explosive material; Secured Area

Building L–2231
Louisiana Army Ammunition Plant
Doyline LA 71023
Landholding Agency: Army
Property Number: 21199620194
Status: Unutilized
Directions:
Comments:
Reasons: Secured Area; Within 2000 ft. of flammable or explosive material

Building L–2230
Louisiana Army Ammunition Plant
Doyline LA 71023
Landholding Agency: Army
Property Number: 21199620195
Status: Unutilized
Directions:
Comments:
Reasons: Secured Area; Within 2000 ft. of flammable or explosive material

Building L–2229
Louisiana Army Ammunition Plant
Doyline LA 71023
Landholding Agency: Army
Property Number: 21199620196
Status: Unutilized
Directions:
Comments:
Reasons: Secured Area; Within 2000 ft. of flammable or explosive material

Building L–2222
Louisiana Army Ammunition Plant
Doyline LA 71023
Landholding Agency: Army
Property Number: 21199620197
Status: Unutilized
Directions:
Comments:
Reasons: Secured Area; Within 2000 ft. of flammable or explosive material

Building L–2223
Louisiana Army Ammunition Plant
Doyline LA 71023
Landholding Agency: Army
Property Number: 21199620198
Status: Unutilized
Directions:
Comments:
Reasons: Secured Area; Within 2000 ft. of flammable or explosive material

Building L–2227
Louisiana Army Ammunition Plant
Doyline LA 71023
Landholding Agency: Army
Property Number: 21199620199
Status: Unutilized

Directions:
Comments:
Reasons: Secured Area; Within 2000 ft. of flammable or explosive material

Building L–2228
Louisiana Army Ammunition Plant
Doyline LA 71023
Landholding Agency: Army
Property Number: 21199620200
Status: Unutilized
Directions:
Comments:
Reasons: Secured Area; Within 2000 ft. of flammable or explosive material

Building M–650
Louisiana Army Ammunition Plant
Doyline LA 71023
Landholding Agency: Army
Property Number: 21199620749
Status: Unutilized
Directions:
Comments:
Reasons: Secured Area; Within 2000 ft. of flammable or explosive material

Building C–1359
Louisiana Army Ammunition Plant
Doyline LA 71023
Landholding Agency: Army
Property Number: 21199620751
Status: Unutilized
Directions:
Comments:
Reasons: Within 2000 ft. of flammable or explosive material; Secured Area

Building B–1462
Louisiana Army Ammunition Plant
Doyline LA 71023
Landholding Agency: Army
Property Number: 21199620752
Status: Unutilized
Directions:
Comments:
Reasons: Within 2000 ft. of flammable or explosive material; Secured Area

Building B–1478
Louisiana Army Ammunition Plant
Doyline LA 71023
Landholding Agency: Army
Property Number: 21199620753
Status: Unutilized
Directions:
Comments:
Reasons: Within 2000 ft. of flammable or explosive material; Secured Area

Building S–1651
Louisiana Army Ammunition Plant
Doyline LA 71023
Landholding Agency: Army
Property Number: 21199620754
Status: Unutilized
Directions:
Comments:
Reasons: Secured Area; Within 2000 ft. of flammable or explosive material

Building E–1741
Louisiana Army Ammunition Plant
Doyline LA 71023
Landholding Agency: Army
Property Number: 21199620755
Status: Unutilized
Directions:
Comments:
Reasons: Secured Area; Within 2000 ft. of flammable or explosive material

Building N–1820
Louisiana Army Ammunition Plant
Doyline LA 71023
Landholding Agency: Army
Property Number: 21199620757
Status: Unutilized
Directions:
Comments:
Reasons: Within 2000 ft. of flammable or explosive material; Secured Area

Building N–1823
Louisiana Army Ammunition Plant
Doyline LA 71023
Landholding Agency: Army
Property Number: 21199620758
Status: Unutilized
Directions:
Comments:
Reasons: Secured Area; Within 2000 ft. of flammable or explosive material

Building N–1824
Louisiana Army Ammunition Plant
Doyline LA 71023
Landholding Agency: Army
Property Number: 21199620759
Status: Unutilized
Directions:
Comments:
Reasons: Within 2000 ft. of flammable or explosive material; Secured Area

Building L–2301
Louisiana Army Ammunition Plant
Doyline LA 71023
Landholding Agency: Army
Property Number: 21199620760
Status: Unutilized
Directions:
Comments:
Reasons: Within 2000 ft. of flammable or explosive material; Secured Area

Building L–2302
Louisiana Army Ammunition Plant
Doyline LA 71023
Landholding Agency: Army
Property Number: 21199620761
Status: Unutilized
Directions:
Comments:
Reasons: Secured Area; Within 2000 ft. of flammable or explosive material

Building L–2303
Louisiana Army Ammunition Plant
Doyline LA 71023
Landholding Agency: Army
Property Number: 21199620762
Status: Unutilized
Directions:
Comments:
Reasons: Within 2000 ft. of flammable or explosive material; Secured Area

Building L–2304
Louisiana Army Ammunition Plant
Doyline LA 71023
Landholding Agency: Army
Property Number: 21199620763
Status: Unutilized
Directions:
Comments:
Reasons: Secured Area; Within 2000 ft. of flammable or explosive material

Building L–2305
Louisiana Army Ammunition Plant
Doyline LA 71023
Landholding Agency: Army
Property Number: 21199620764
Status: Unutilized
Directions:
Comments:
Reasons: Secured Area; Within 2000 ft. of flammable or explosive material

Building L–2306
Louisiana Army Ammunition Plant
Doyline LA 71023
Landholding Agency: Army
Property Number: 21199620765
Status: Unutilized
Directions:
Comments:
Reasons: Secured Area; Within 2000 ft. of flammable or explosive material

Building L–2307
Louisiana Army Ammunition Plant
Doyline LA 71023
Landholding Agency: Army
Property Number: 21199620766
Status: Unutilized
Directions:
Comments:
Reasons: Secured Area; Within 2000 ft. of flammable or explosive material

Building L–2308
Louisiana Army Ammunition Plant
Doyline LA 71023
Landholding Agency: Army
Property Number: 21199620767
Status: Unutilized
Directions:
Comments:
Reasons: Within 2000 ft. of flammable or explosive material; Secured Area

Building L–2309
Louisiana Army Ammunition Plant
Doyline LA 71023
Landholding Agency: Army
Property Number: 21199620768
Status: Unutilized
Directions:
Comments:
Reasons: Secured Area; Within 2000 ft. of flammable or explosive material

Building L–2310
Louisiana Army Ammunition Plant
Doyline LA 71023
Landholding Agency: Army
Property Number: 21199620769
Status: Unutilized
Directions:
Comments:
Reasons: Within 2000 ft. of flammable or explosive material; Secured Area

Building L–2311
Louisiana Army Ammunition Plant
Doyline LA 71023
Lanholding Agency: Army
Property Number: 21199620770
Status: Unutilized
Directions:
Comments:
Reasons: Secured Area; Within 2000 ft. of flammable or explosive material

Building L–2312
Louisiana Army Ammunition Plant
Doyline LA 71023
Lanholding Agency: Army
Property Number: 21199620771
Status: Unutilized
Directions:
Comments:
Reasons: Secured Area; Within 2000 ft. of flammable or explosive material

Building L–2313

Louisiana Army Ammunition Plant
Doyline LA 71023
Lanholding Agency: Army
Property Number: 21199620772
Status: Unutilized
Directions:
Comments:
Reasons: Secured Area; Within 2000 ft. of flammable or explosive material

Building L–2314
Louisiana Army Ammunition Plant
Doyline LA 71023
Lanholding Agency: Army
Property Number: 21199620773
Status: Unutilized
Directions:
Comments:
Reasons: Secured Area; Within 2000 ft. of flammable or explosive material

Building L–2315
Louisiana Army Ammunition Plant
Doyline LA 71023
Lanholding Agency: Army
Property Number: 21199620774
Status: Unutilized
Directions:
Comments:
Reasons: Within 2000 ft. of flammable or explosive material; Secured Area

Building L–2316
Louisiana Army Ammunition Plant
Doyline LA 71023
Lanholding Agency: Army
Property Number: 21199620775
Status: Unutilized
Directions:
Comments:
Reasons: Within 2000 ft. of flammable or explosive material; Secured Area

Building L–2317
Louisiana Army Ammunition Plant
Doyline LA 71023
Lanholding Agency: Army
Property Number: 21199620776
Status: Unutilized
Directions:
Comments:
Reasons: Secured Area; Within 2000 ft. of flammable or explosive material

Building L–2318
Louisiana Army Ammunition Plant
Doyline LA 71023
Lanholding Agency: Army
Property Number: 21199620777
Status: Unutilized
Directions:
Comments:
Reasons: Within 2000 ft. of flammable or explosive material; Secured Area

Building L–2319
Louisiana Army Ammunition Plant
Doyline LA 71023
Lanholding Agency: Army
Property Number: 21199620778
Status: Unutilized
Directions:
Comments:
Reasons: Within 2000 ft. of flammable or explosive material; Secured Area

Building L–2320
Louisiana Army Ammunition Plant
Doyline LA 71023
Lanholding Agency: Army
Property Number: 21199620779
Status: Unutilized
Directions:
Comments:
Reasons: Within 2000 ft. of flammable or explosive material; Secured Area

Building L–2321
Louisiana Army Ammunition Plant
Doyline LA 71023
Lanholding Agency: Army
Property Number: 21199620780
Status: Unutilized
Directions:
Comments:
Reasons: Within 2000 ft. of flammable or explosive material; Secured Area

Buildings L–2322, L–2323,
Louisiana Army Ammunition Plant
Doyline LA 71023
Lanholding Agency: Army
Property Number: 21199620781
Status: Unutilized
Directions: L–2324, L–2325, L–2326, L–2327, L–2328
Comments:
Reasons: Within 2000 ft. of flammable or explosive material; Secured Area

Buildings L–2329, L–2330,
Louisiana Army Ammunition Plant
Doyline LA 71023
Lanholding Agency: Army
Property Number: 21199620782
Status: Unutilized
Directions: L–2331, L–2332, L–2333, L–2334, L–2335
Comments:
Reasons: Within 2000 ft. of flammable or explosive material; Secured Area

Building P–2500
Louisiana Army Ammunition Plant
Doyline LA 71023
Lanholding Agency: Army
Property Number: 21199620793
Status: Unutilized
Directions:
Comments:
Reasons: Secured Area; Within 2000 ft. of flammable or explosive material

Building P–2501
Louisiana Army Ammunition Plant
Doyline LA 71023
Lanholding Agency: Army
Property Number: 21199620794
Status: Unutilized
Directions:
Comments:
Reasons: Secured Area; Within 2000 ft. of flammable or explosive material

Building Y–2608
Louisiana Army Ammunition Plant
Doyline LA 71023
Landholding Agency: Army
Property Number: 21199620795
Status: Unutilized
Directions:
Comments:
Reasons: Secured Area; Within 2000 ft. of flammable or explosive material

Building Y–2632
Louisiana Army Ammunition Plant
Doyline LA 71023
Landholding Agency: Army
Property Number: 21199620797
Status: Unutilized
Directions:
Comments:
Reasons: Within 2000 ft. of flammable or explosive material; Secured Area

Building Y–2633
Louisiana Army Ammunition Plant
Doyline LA 71023
Landholding Agency: Army
Property Number: 21199620798
Status: Unutilized
Directions:
Comments:
Reasons: Within 2000 ft. of flammable or explosive material; Secured Area

Building Y–2640
Louisiana Army Ammunition Plant
Doyline LA 71023
Landholding Agency: Army
Property Number: 21199620799
Status: Unutilized
Directions:
Comments:
Reasons: Secured Area; Within 2000 ft. of flammable or explosive material

Building X–5108
Louisiana Army Ammunition Plant
Doyline LA 71023
Landholding Agency: Army
Property Number: 21199620801
Status: Unutilized
Directions:
Comments:
Reasons: Secured Area; Within 2000 ft. of flammable or explosive material

Bldg. M3–208
Louisiana AAP
Doyline LA 71023
Landholding Agency: Army
Property Number: 21199820047
Status: Excess
Directions:
Comments:
Reasons: Floodway; Secured Area

Bldg. M4–2704
Louisiana AAP
Doyline LA 71023
Landholding Agency: Army
Property Number: 21199820049
Status: Excess
Directions:
Comments:
Reasons: Secured Area; Floodway

Bldg. B–1412
Louisiana AAP
Doyline LA 71023
Landholding Agency: Army
Property Number: 21199820051
Status: Excess
Directions:
Comments:
Reasons: Secured Area

Bldg. B–1427
Louisiana AAP
Doyline LA 71023
Landholding Agency: Army
Property Number: 21199820052
Status: Excess
Directions:
Comments:
Reasons: Secured Area; Within 2000 ft. of flammable or explosive material

Bldg. B–1433
Louisiana AAP
Doyline LA 71023
Landholding Agency: Army
Property Number: 21199820053

Status: Excess
Directions:
Comments:
Reasons: Floodway; Secured Area

Bldg. B–1434
Louisiana AAP
Doyline LA 71023
Landholding Agency: Army
Property Number: 21199820054
Status: Excess
Directions:
Comments:
Reasons: Secured Area; Floodway

Bldg. B–1472
Louisiana AAP
Doyline LA 71023
Landholding Agency: Army
Property Number: 21199820058
Status: Excess
Directions:
Comments:
Reasons: Floodway; Secured Area

Bldg. C–1322
Louisiana AAP
Doyline LA 71023
Landholding Agency: Army
Property Number: 21199820059
Status: Excess
Directions:
Comments:
Reasons: Floodway; Secured Area

Bldg. C–1323
Louisiana AAP
Doyline LA 71023
Landholding Agency: Army
Property Number: 21199820060
Status: Excess
Directions:
Comments:
Reasons: Secured Area; Floodway

Bldg. C–1348
Louisiana AAP
Doyline LA 71023
Landholding Agency: Army
Property Number: 21199820061
Status: Excess
Directions:
Comments:
Reasons: Within 2000 ft. of flammable or explosive material; Secured Area

Bldg. D–1215
Louisiana AAP
Doyline LA 71023
Landholding Agency: Army
Property Number: 21199820062
Status: Excess
Directions:
Comments:
Reasons: Within 2000 ft. of flammable or explosive material; Secured Area

Bldg. D–1232
Louisiana AAP
Doyline LA 71023
Landholding Agency: Army
Property Number: 21199820063
Status: Excess
Directions:
Comments:
Reasons: Within 2000 ft. of flammable or explosive material; Secured Area

Bldgs. STP–2000, 2001, 2002
Louisiana AAP
Doyline LA 71023
Landholding Agency: Army
Property Number: 21199820065
Status: Excess
Directions:
Comments:
Reasons: Floodway; Secured Area

Bldg. STP–2004
Louisiana AAP
Doyline LA 71023
Landholding Agency: Army
Property Number: 21199820066
Status: Excess
Directions:
Comments:
Reasons: Secured Area; Floodway

Bldg. W–2900
Louisiana AAP
Doyline LA 71023
Landholding Agency: Army
Property Number: 21199820067
Status: Excess
Directions:
Comments:
Reasons: Secured Area; Floodway

4 Bldgs.
Louisiana AAP
W–2901, 2902, 2903, 2904
Doyline LA 71023
Landholding Agency: Army
Property Number: 21199820068
Status: Excess
Directions:
Comments:
Reasons: Floodway; Secured Area

Bldgs. W–2905, 2906
Louisiana AAP
Doyline LA 71023
Landholding Agency: Army
Property Number: 21199820069
Status: Excess
Directions:
Comments:
Reasons: Floodway; Secured Area

Bldg. W–2907
Louisiana AAP
Doyline LA 71023
Landholding Agency: Army
Property Number: 21199820070
Status: Excess
Directions:
Comments:
Reasons: Secured Area; Floodway

Bldgs. X–5080, 5101, 5102
Louisiana AAP
Doyline LA 71023
Landholding Agency: Army
Property Number: 21199820071
Status: Excess
Directions:
Comments:
Reasons: Floodway; Secured Area

Bldg. X–5104
Louisiana AAP
Doyline LA 71023
Landholding Agency: Army
Property Number: 21199820072
Status: Excess
Directions:
Comments:
Reasons: Secured Area; Floodway

Bldg. X–5105
Louisiana AAP
Doyline LA 71023
Landholding Agency: Army
Property Number: 21199820073
Status: Excess
Directions:
Comments:
Reasons: Secured Area; Floodway

Bldgs. X–5107, X–5115
Louisiana AAP
Doyline LA 71023
Landholding Agency: Army
Property Number: 21199820074
Status: Excess
Directions:
Comments:
Reasons: Floodway; Secured Area

Bldg. X–5114
Louisiana AAP
Doyline LA 71023
Landholding Agency: Army
Property Number: 21199820075
Status: Excess
Directions:
Comments:
Reasons:
Floodway; Secured Area

Bldg. X–5116
Louisiana AAP
Doyline LA 71023
Landholding Agency: Army
Property Number: 21199820076
Status: Excess
Directions:
Comments:
Reasons: Secured Area; Floodway

Bldg. X–5117
Louisiana AAP
Doyline LA 71023
Landholding Agency: Army
Property Number: 21199820077
Status: Excess
Directions:
Comments:
Reasons: Floodway; Secured Area

Bldg. Y–2604
Louisiana AAP
Doyline LA 71023
Landholding Agency: Army
Property Number: 21199820078
Status: Excess
Directions:
Comments:
Reasons: Secured Area; Floodway

Bldg. 7002
Fort Polk
Ft. Polk LA 71459
Landholding Agency: Army
Property Number: 21200130030
Status: Underutilized
Comments: 7001 is still in use
Reasons: Floodway

2 Bldgs.
Fort Polk
00414, 00418
Vernon LA 71459
Landholding Agency: Army
Property Number: 21200530008
Status: Unutilized
Comments: 00417 is demolished
Reasons: Floodway; Secured Area

Maryland

Bldg. E5760
Aberdeen Proving Ground
Edgewood Area
Aberdeen City MD 21010–5425
Landholding Agency: Army
Property Number: 21199012610

Status: Unutilized
Directions:
Comments:
Reasons: Secured Area; Within 2000 ft. of flammable or explosive material

Bldg. E5375
Aberdeen Proving Ground
Edgewood Area
Aberdeen City MD 21010–5425
Landholding Agency: Army
Property Number: 21199012638
Status: Unutilized
Directions:
Comments:
Reasons: Within 2000 ft. of flammable or explosive material

Bldg. E5441
Aberdeen Proving Ground
Edgewood Area
Aberdeen City MD 21010–5425
Landholding Agency: Army
Property Number: 21199012640
Status: Unutilized
Directions:
Comments:
Reasons: Within 2000 ft. of flammable or explosive material

Bldg. E5190
Aberdeen Proving Ground
Edgewood Area
Aberdeen City MD 21010–5425
Landholding Agency: Army
Property Number: 21199012658
Status: Unutilized
Directions:
Comments:
Reasons: Secured Area; Within 2000 ft. of flammable or explosive material

Bldg. 5010
Aberdeen Proving Ground
MD 21005–5001
Landholding Agency: Army
Property Number: 21199610489
Status: Unutilized
Directions:
Comments:
Reasons: Extensive deterioration

Bldg. 5011
Aberdeen Proving Ground
MD 21005–5001
Landholding Agency: Army
Property Number: 21199610490
Status: Unutilized
Directions:
Comments:
Reasons: Extensive deterioration

Bldg. 0909A
Aberdeen Proving Ground
MD 21005–5001
Landholding Agency: Army
Property Number: 21199730077
Status: Unutilized
Directions:
Comments:
Reasons: Extensive deterioration

Bldg. 1977
Fort Meade
Ft. Meade MD 20755–5115
Landholding Agency: Army
Property Number: 21199810065
Status: Unutilized
Directions:
Comments:
Reasons: Extensive deterioration

Bldg. E3466
Aberdeen Proving Ground
MD 21005–5001
Landholding Agency: Army
Property Number: 21199810076
Status: Unutilized
Directions:
Comments:
Reasons: Extensive deterioration

Bldg. E3544
Aberdeen Proving Ground
MD 21005–5001
Landholding Agency: Army
Property Number: 21199810078
Status: Unutilized
Directions:
Comments:
Reasons: Extensive deterioration

Bldg. E3646
Aberdeen Proving Ground
MD 21005–5001
Landholding Agency: Army
Property Number: 21199810085
Status: Unutilized
Directions:
Comments:
Reasons: Other—contamination

Bldg. 03320
Aberdeen Proving Ground
MD 21005–5001
Landholding Agency: Army
Property Number: 21199810112
Status: Unutilized
Directions:
Comments:
Reasons: Extensive deterioration

Bldg. E3236
Aberdeen Proving Ground
MD 21005–5001
Landholding Agency: Army
Property Number: 21199820090
Status: Unutilized
Directions:
Comments:
Reasons: Extensive deterioration

Bldg. E5695
Aberdeen Proving Ground
MD 21005–5001
Landholding Agency: Army
Property Number: 21199820096
Status: Unutilized
Directions:
Comments:
Reasons: Extensive deterioration

Bldg. 00310 (portion)
Aberdeen Proving Ground
Aberdeen MD 21005–5001
Landholding Agency: Army
Property Number: 21200120059
Status: Unutilized
GSA Number:
Reasons: Extensive deterioration

Bldg. E3871
Aberdeen Proving Ground
Aberdeen MD 21005–5001
Landholding Agency: Army
Property Number: 21200120060
Status: Unutilized
GSA Number:
Reasons: Extensive deterioration

Bldg. 951
Ft. George G. Meade
Ft. Meade MD 20755
Landholding Agency: Army
Property Number: 21200140059
Status: Unutilized
GSA Number:
Reasons: Extensive deterioration

Bldgs. 968, 978, 988, 998
Ft. George G. Meade
Ft. Meade MD 20755
Landholding Agency: Army
Property Number: 21200140060
Status: Unutilized
GSA Number:
Reasons: Extensive deterioration

Bldg. 00211
Curtis Bay Ordnance Depot
Baltimore MD 21226–1790
Landholding Agency: Army
Property Number: 21200320024
Status: Unutilized
GSA Number:
Reasons: Extensive deterioration

Bldg. 6613
Fort George G. Meade
Ft. Meade MD 20755–5115
Landholding Agency: Army
Property Number: 21200410014
Status: Unutilized
Reasons: Extensive deterioration

Bldg. 00454
Aberdeen Proving Grounds
Aberdeen MD 21005
Landholding Agency: Army
Property Number: 21200410017
Status: Unutilized
Reasons: Secured Area

Bldg. E1414
Aberdeen Proving Grounds
Aberdeen MD 21005
Landholding Agency: Army
Property Number: 21200410024
Status: Unutilized
Reasons: Secured Area

Bldg. E1890
Aberdeen Proving Grounds
Aberdeen MD 21005
Landholding Agency: Army
Property Number: 21200410026
Status: Unutilized
Reasons: Secured Area; Extensive deterioration

Bldg. 02427
Aberdeen Proving Grounds
Aberdeen MD 21005
Landholding Agency: Army
Property Number: 21200410029
Status: Unutilized
Reasons: Extensive deterioration; Secured Area

Bldgs. E3220, E5136
Aberdeen Proving Grounds
Aberdeen MD 21005
Landholding Agency: Army
Property Number: 21200410030
Status: Unutilized
Reasons: Secured Area; Extensive deterioration

Bldg. 05259
Aberdeen Proving Grounds
Aberdeen MD 21005
Landholding Agency: Army
Property Number: 21200410031
Status: Unutilized
Reasons: Extensive deterioration; Secured Area

Bldg. E5330
Aberdeen Proving Grounds

Aberdeen MD 21005
Landholding Agency: Army
Property Number: 21200410032
Status: Unutilized
Reasons: Extensive deterioration; Secured Area

20 Bldgs.
Aberdeen Proving Ground
Harford MD 21005
Landholding Agency: Army
Property Number: 21200420098
Status: Unutilized
Directions: E3030, E3032, E3034, E3036, E3038, E3040, E3042, E3044, E3046, E3061 thru E3070, E3072
Reasons: Extensive deterioration

5 Bldgs.
Aberdeen Proving Ground
Harford MD 21005
Landholding Agency: Army
Property Number: 21200420099
Status: Unutilized
Directions: E3035, E3041, E3076, E3078, E3080
Reasons: Extensive deterioration

Bldgs. E3039, E3060, E3073
Aberdeen Proving Ground
Harford MD 21005
Landholding Agency: Army
Property Number: 21200420100
Status: Unutilized
Reasons: Extensive deterioration

Bldg. 00664
Aberdeen Proving Grounds
Aberdeen MD 21005
Landholding Agency: Army
Property Number: 21200440027
Status: Unutilized
Reasons: Extensive deterioration

Bldg. 3185
Fort George G. Meade
Ft. Meade MD 20755–5115
Landholding Agency: Army
Property Number: 21200510018
Status: Unutilized
Reasons: Extensive deterioration

Bldg. 8610
Fort George G. Meade
Anne Arundel MD 20755–5115
Landholding Agency: Army
Property Number: 21200520020
Status: Unutilized
Reasons: Extensive deterioration

38 Bldgs.
Aberdeen Proving Grounds
Aberdeen MD 21005
Landholding Agency: Army
Property Number: 21200520021
Status: Underutilized
Directions: Chemical Warfare Neutralization Site
Reasons: Secured Area

Bldg. 0001B
Federal Support Center
Olney MD 20882
Landholding Agency: Army
Property Number: 21200530018
Status: Underutilized
Reasons: Within 2000 ft. of flammable or explosive material

Bldg. 00279
Fort Detrick
Frederick MD 21702
Landholding Agency: Army
Property Number: 21200540041
Status: Unutilized
Reasons: Secured Area

Bldgs. 2204, 02271
Fort Meade
Anne Arundel MD 20755
Landholding Agency: Army
Property Number: 21200620015
Status: Unutilized
Reasons: Extensive deterioration

Bldg. 2205
Fort Meade
Ft. Meade MD 20755
Landholding Agency: Army
Property Number: 21200640049
Status: Unutilized
Reasons: Extensive deterioration

Bldgs. 4201, 4203
Fort Meade
Ft. Meade MD 20755
Landholding Agency: Army
Property Number: 21200640050
Status: Unutilized
Reasons: Extensive deterioration

Bldgs. 04272, 04554
Ft. George G. Meade
Anne Arundel MD 20755
Landholding Agency: Army
Property Number: 21200710031
Status: Unutilized
Reasons: Extensive deterioration

Bldgs. E3850, E5699, E6882
Aberdeen Proving Ground
Harford MD 21005
Landholding Agency: Army
Property Number: 21200740015
Status: Unutilized
Reasons: Secured Area

4 Bldgs.
Fort Meade
2630, 4717, 4720, 4721
Anne Arundel MD 20755
Landholding Agency: Army
Property Number: 21200740016
Status: Unutilized
Reasons: Secured Area

5 Bldgs.
Aberdeen Proving Ground
Harford MD 21005
Landholding Agency: Army
Property Number: 21200740141
Status: Unutilized
Directions: 00505, 01047, E1407, E1417, E1452
Reasons: Secured Area

7 Bldgs.
Aberdeen Proving Ground
Harford MD 21005
Landholding Agency: Army
Property Number: 21200740142
Status: Unutilized
Directions: E3007, E3221, E3222, E3223, E3224, E3226, E3228
Reasons: Secured Area

Bldgs. E3236, E3268, E3850
Aberdeen Proving Ground
Harford MD 21005
Landholding Agency: Army
Property Number: 21200740143
Status: Unutilized
Reasons: Secured Area

Bldgs. E7012, E7822
Aberdeen Proving Ground
Harford MD 21005
Landholding Agency: Army
Property Number: 21200740144
Status: Unutilized
Reasons: Secured Area

Bldgs. 00505, 01047
Aberdeen Proving Ground
Harford MD 21005
Landholding Agency: Army
Property Number: 21200810011
Status: Unutilized
Reasons: Secured Area

Bldgs. E1407, E1417, E1452
Aberdeen Proving Ground
Harford MD 21005
Landholding Agency: Army
Property Number: 21200810012
Status: Unutilized
Reasons: Secured Area

7 Bldgs.
Aberdeen Proving Ground
Harford MD 21005
Landholding Agency: Army
Property Number: 21200810013
Status: Unutilized
Directions: E3007, E3221, E3222, E3223, E3224, E3226, E3228
Reasons: Secured Area

Bldgs. E3236, E3268, E3850
Aberdeen Proving Ground
Harford MD 21005
Landholding Agency: Army
Property Number: 21200810014
Status: Unutilized
Reasons: Secured Area

Bldgs. E4060, E4440
Aberdeen Proving Ground
Harford MD 21005
Landholding Agency: Army
Property Number: 21200810015
Status: Unutilized
Reasons: Secured Area

6 Bldgs.
Aberdeen Proving Ground
Harford MD 21005
Landholding Agency: Army
Property Number: 21200810016
Status: Unutilized
Directions: E5695, E5770, E5771, E5772, E5774, E5778
Reasons: Secured Area

Bldgs. E5897, E5913, E5914
Aberdeen Proving Ground
Harford MD 21005
Landholding Agency: Army
Property Number: 21200810017
Status: Unutilized
Reasons: Secured Area

Bldgs. E6892, E7012, E7822
Aberdeen Proving Ground
Harford MD 21005
Landholding Agency: Army
Property Number: 21200810018
Status: Unutilized
Reasons: Secured Area

Bldg. 00940
Fort Detrick
Frederick MD 21702
Landholding Agency: Army
Property Number: 21200810019
Status: Unutilized
Reasons: Secured Area

6 Bldgs.
Aberdeen Proving Ground
Harford MD 21005

Landholding Agency: Army
Property Number: 21200820134
Status: Unutilized
Directions: 03070, 3070A E3163, E3642, E3646, E3871
Reasons: Contamination

Bldgs. E3641, E3728
Aberdeen Proving Ground
Harford MD 21005
Landholding Agency: Army
Property Number: 21200820135
Status: Unutilized
Reasons: Contamination

9 Bldgs.
Aberdeen Proving Ground
Harford MD
Landholding Agency: Army
Property Number: 21200820136
Status: Unutilized
Directions: 04019, 04020, 04021, 04022, 04023, 04031, 04035, 04036, 04038
Reasons: Contamination

10 Bldgs.
Aberdeen Proving Ground
Harford MD
Landholding Agency: Army
Property Number: 21200820137
Status: Unutilized
Directions: 05005, 05010, 05011, 05031, 05032, 05033, 05035, 05037, 05038, 05039
Reasons: Contamination

4 Bldgs.
Aberdeen Proving Ground
Harford MD
Landholding Agency: Army
Property Number: 21200820138
Status: Unutilized
Directions: 05042, 05045, 05047, 05048
Reasons: Contamination

11 Bldgs.
Aberdeen Proving Ground
Harford MD
Landholding Agency: Army
Property Number: 21200820139
Status: Unutilized
Directions: 05200, 05202, 05204, 05206, 05207, 05212, 05214, 05215, 05216, 05217, 05218
Reasons: Contamination

Bldgs. E5325, E5375
Aberdeen Proving Ground
Harford MD
Landholding Agency: Army
Property Number: 21200820140
Status: Unutilized
Reasons: Contamination

6 Bldgs.
Aberdeen Proving Ground
Harford MD
Landholding Agency: Army
Property Number: 21200820141
Status: Unutilized
Directions: E5440, E5476, E5481, E5487, E5489, E5760
Reasons: Contamination

Bldg. 0909A
Aberdeen Proving Ground
Harford MD
Landholding Agency: Army
Property Number: 21200820142
Status: Unutilized
Reasons: Contamination

Bldgs. P338, P436, P566
Fort Detrick
Frederick MD 21702
Landholding Agency: Army
Property Number: 21200840023
Status: Unutilized
Reasons: Secured Area

Bldgs. 01423, 01432
Fort Detrick
Frederick MD 21702
Landholding Agency: Army
Property Number: 21200840024
Status: Unutilized
Reasons: Secured Area

10 Bldgs.
Aberdeen Proving Ground
Harford MD 21005
Landholding Agency: Army
Property Number: 21200840025
Status: Unutilized
Directions: E1100, R1101, E1102, E1103, E1104, E1105, E1106, E1107, E1108, E1109
Reasons: Secured Area

10 Bldgs.
Aberdeen Proving Ground
Harford MD 21005
Landholding Agency: Army
Property Number: 21200840026
Status: Unutilized
Directions: E1110, E1111, E1112, E1113, E1114, E1115, E1116, E1117, E1118, E1119
Reasons: Secured Area

10 Bldgs.
Aberdeen Proving Ground
Harford MD 21005
Landholding Agency: Army
Property Number: 21200840027
Status: Unutilized
Directions: E1120, E1121, E1122, E1123, E1124, E1125, E1126, E1127, E1128, E1129
Reasons: Secured Area

10 Bldgs.
Aberdeen Proving Ground
Harford MD 21005
Landholding Agency: Army
Property Number: 21200840028
Status: Unutilized
Directions: E1130, E1131, E1132, E1133, E1134, E1135, E1136, E1137, E1138, E1139
Reasons: Secured Area

10 Bldgs.
Aberdeen Proving Ground
Harford MD 21005
Landholding Agency: Army
Property Number: 21200840029
Status: Unutilized
Directions: E1140, E1141, E1142, E1143, E1144, E1145, E1146, E1147, E1148, E1149
Reasons: Secured Area

6 Bldgs.
Aberdeen Proving Ground
Harford MD 21005
Landholding Agency: Army
Property Number: 21200840030
Status: Unutilized
Directions: E1150, E1151, E1152, E1153, E1154, E1155
Reasons: Secured Area

Bldgs. 03062, 3070B
Aberdeen Proving Ground
Harford MD 21005
Landholding Agency: Army
Property Number: 21200840031
Status: Unutilized
Reasons: Secured Area

7 Bldgs.
Aberdeen Proving Ground
Harford MD 21005
Landholding Agency: Army
Property Number: 21200840032
Status: Unutilized
Directions: 05015, 5015A, 05040, 05041, 05049, 05050, 05051
Reasons: Secured Area

5 Bldgs.
Aberdeen Proving Ground
Harford MD 21005
Landholding Agency: Army
Property Number: 21200840033
Status: Unutilized
Directions: 05220, 05221, 05222, 05224, 05613
Reasons: Secured Area

6 Bldgs.
Aberdeen Proving Ground
Harford MD 21005
Landholding Agency: Army
Property Number: 21200920016
Status: Unutilized
Directions: 00099, 00664, E2338, E2340, E5441, 05650
Reasons: Secured Area

6 Bldgs.
Aberdeen Proving Ground
Harford MD 21005
Landholding Agency: Army
Property Number: 21200920044
Status: Unutilized
Directions: 00086, 0400C, 01050, 01087, 01088, 01199
Reasons: Extensive deterioration

8 Bldgs.
Aberdeen Proving Ground
Harford MD 21005
Landholding Agency: Army
Property Number: 21200920045
Status: Unutilized
Directions: 02201, E3315, 04306, 04307, 04308, 04309, E5117, E5865
Reasons: Extensive deterioration

7 Bldgs.
Aberdeen Proving Ground
Harford MD 21005
Landholding Agency: Army
Property Number: 21200940028
Status: Unutilized
Directions: 4210, 4211, 4212, 4213, 4302, 4303, 5650
Reasons: Secured Area

9 Bldgs.
Aberdeen Proving Grounds
Harford MD 21005
Landholding Agency: Army
Property Number: 21200940029
Status: Unutilized
Directions: E3220, E4405, E4410, E4430, E4435, E4445, E4455, E4460, E4475
Reasons: Secured Area

9 Bldgs.
Aberdeen Proving Ground
Harford MD 21005
Landholding Agency: Army
Property Number: 21200940030
Status: Unutilized
Directions: E5641, E5642, E5684, E5685, E5686, E5687, E5910, E5911, E5912
Reasons: Secured Area

Bldgs. 718, 917
Fort Detrick
Frederick MD 21702

Landholding Agency: Army
Property Number: 21200940043
Status: Unutilized
Reasons: Secured Area

Bldg. SPITO
Adelphi Lab Center
Prince George MD 20783
Landholding Agency: Army
Property Number: 21201010008
Status: Unutilized
Reasons: Extensive deterioration

5 Bldgs.
Aberdeen Proving Ground
Aberdeen MD 21005
Landholding Agency: Army
Property Number: 21201020012
Status: Unutilized
Directions: E4082, E4083, E4084, E4085, E6834
Reasons: Secured Area

Bldgs. 155, 506, 508A, 611
Fort Detrick
Montgomery MD 20901
Landholding Agency: Army
Property Number: 21201030014
Status: Unutilized
Reasons: Secured Area

Bldgs. 136, 607
Fort Detrick
Forrest Glen Annex
Silver Spring MD 20901
Landholding Agency: Army
Property Number: 21201040008
Status: Unutilized
Reasons: Secured Area

Bldg 00517
517 Blossom Point Road
Blossom Point Research Facility
Welcome MD 20693
Landholding Agency: Army
Property Number: 21201140040
Status: Unutilized
Reasons: Extensive deterioration; Secured Area

Bldg. 00402
402 Blossom Point Road
Blossom Point Research Facility
Welcome MD 20693
Landholding Agency: Army
Property Number: 21201140041
Status: Unutilized
Reasons: Secured Area; Within 2000 ft. of flammable or explosive material

Massachusetts

Bldg. 3713
USAG Devens
Devens MA 01434
Landholding Agency: Army
Property Number: 21200840022
Status: Excess
Reasons: Secured Area

Michigan

Bldg. 5756
Newport Weekend Training Site
Carleton MI 48166
Landholding Agency: Army
Property Number: 21199310061
Status: Unutilized
Directions:
Comments:
Reasons: Extensive deterioration; Secured Area

Bldg. 08625
Poxin USAR Center
Southfield MI 48034–2295
Landholding Agency: Army
Property Number: 21200330026
Status: Unutilized
GSA Number:
Reasons: Extensive deterioration

Bldg. 8639
Poxin USAR Center
Southfield MI 48034–2295
Landholding Agency: Army
Property Number: 21200330027
Status: Unutilized
GSA Number:
Reasons: Extensive deterioration

Bldg. 930
U.S. Army Garrison-Selfridge
Selfridge MI 48045
Landholding Agency: Army
Property Number: 21200420093
Status: Unutilized
Reasons: Secured Area

Bldg. 001
Crabble USARC
Saginaw MI 48601–4099
Landholding Agency: Army
Property Number: 21200420094
Status: Unutilized
Reasons: Extensive deterioration

Bldgs. 8673, 8675
Poxin USARC
Saginaw MI 48034–2295
Landholding Agency: Army
Property Number: 21200420095
Status: Unutilized
Reasons: Extensive deterioration

Bldg. 00714
Selfridge Air Natl Guard Base
Macomb MI 48045
Landholding Agency: Army
Property Number: 21200440032
Status: Unutilized
Reasons: Extensive deterioration

20 Bldgs.
US Army Garrison-Selfridge
Macomb MI 48045
Landholding Agency: Army
Property Number: 21200510020
Status: Unutilized
Directions: 227, 229, 231, 233, 235, 256 thru 270
Reasons: Secured Area

4 Bldgs.
US Army Garrison-Selfridge
Macomb MI 48045
Landholding Agency: Army
Property Number: 21200510021
Status: Unutilized
Directions: 769, 770, 774, 775
Reasons: Secured Area

9 Bldgs.
US Army Garrison-Selfridge
Macomb MI 48045
Landholding Agency: Army
Property Number: 21200510022
Status: Unutilized
Directions: 905, 907–909, 929–931, 935–936
Reasons: Secured Area

5 Bldgs.
US Army Garrison-Selfridge
Macomb MI 48045
Landholding Agency: Army
Property Number: 21200510023
Status: Unutilized
Directions: 50905, 50907–50909, 50911
Reasons: Secured Area

4 Buildings
Detroit Arsenal
T0209, T0216, T0246, T0247
Warren MI 48397–5000
Landholding Agency: Army
Property Number: 21200520022
Status: Unutilized
Reasons: Secured Area

6 Bldgs.
Detroit Arsenal
Warren MI 48397
Landholding Agency: Army
Property Number: 21201010009
Status: Unutilized
Directions: 521, 213, 214, 237, 00007, 00008
Reasons: Secured Area

Minnesota

Bldg. 575
Twin Cities Army Ammunition Plant
New Brighton MN 55112
Landholding Agency: Army
Property Number: 21199120166
Status: Unutilized
Directions:
Comments:
Reasons: Secured Area

Bldg. 573
Twin Cities Army Ammunition Plant
Old Highway 8
New Brighton MN 55112
Landholding Agency: Army
Property Number: 21199210014
Status: Unutilized
Directions:
Comments:
Reasons: Within 2000 ft. of flammable or explosive material; Secured Area

Bldg. 596
Twin Cities Army Ammunition Plant
Old Highway 8
New Brighton MN 55112
Landholding Agency: Army
Property Number: 21199210015
Status: Unutilized
Directions:
Comments:
Reasons: Secured Area; Within 2000 ft. of flammable or explosive material

Bldg. 187
Twin Cities Army Ammunition Plant
New Brighton MN 55112
Landholding Agency: Army
Property Number: 21199220227
Status: Unutilized
Directions:
Comments:
Reasons: Within 2000 ft. of flammable or explosive material; Secured Area

Bldg. 188
Twin Cities Army Ammunition Plant
New Brighton MN 55112
Landholding Agency: Army
Property Number: 21199220228
Status: Unutilized
Directions:
Comments:
Reasons: Secured Area; Within 2000 ft. of flammable or explosive material

Bldg. 189
Twin Cities Army Ammunition Plant
New Brighton MN 55112
Landholding Agency: Army

Property Number: 21199220229
Status: Unutilized
Directions:
Comments:
Reasons: Secured Area; Within 2000 ft. of flammable or explosive material

Bldg. 507
Twin Cities Army Ammunition Plant
New Brighton MN 55112
Landholding Agency: Army
Property Number: 21199220231
Status: Unutilized
Directions:
Comments:
Reasons: Within 2000 ft. of flammable or explosive material; Secured Area

Bldg. 972
Twin Cities Army Ammunition Plant
New Brighton MN 55112
Landholding Agency: Army
Property Number: 21199220233
Status: Unutilized
Directions:
Comments:
Reasons: Secured Area; Within 2000 ft. of flammable or explosive material

Bldg. 973
Twin Cities Army Ammunition Plant
New Brighton MN 55112
Landholding Agency: Army
Property Number: 21199220234
Status: Unutilized
Directions:
Comments:
Reasons: Secured Area; Within 2000 ft. of flammable or explosive material

Bldg. 975
Twin Cities Army Ammunition Plant
New Brighton MN 55112
Landholding Agency: Army
Property Number: 21199220235
Status: Unutilized
Directions:
Comments:
Reasons: Secured Area; Within 2000 ft. of flammable or explosive material

Bldg. 595
Twin Cities Army Ammunition Plant
New Brighton MN 55112
Landholding Agency: Army
Property Number: 21199240328
Status: Unutilized
Directions:
Comments:
Reasons: Secured Area; Within 2000 ft. of flammable or explosive material

Bldg. 586
Twin Cities Army Ammunition Plant
New Brighton MN 55112
Landholding Agency: Army
Property Number: 21199310056
Status: Underutilized
Directions:
Comments:
Reasons: Secured Area

Bldg. 598
Twin Cities Army Ammunition Plant
New Brighton MN 55112
Landholding Agency: Army
Property Number: 21199320152
Status: Unutilized
Directions:
Comments:
Reasons: Secured Area

Bldg. 901
Twin Cities Army Ammunition Plant
New Brighton MN 55112
Landholding Agency: Army
Property Number: 21199320153
Status: Unutilized
Directions:
Comments:
Reasons: Secured Area

Bldg. 902
Twin Cities Army Ammunition Plant
New Brighton MN 55112
Landholding Agency: Army
Property Number: 21199320154
Status: Unutilized
Directions:
Comments:
Reasons: Secured Area

Bldg. 5530
Twin Cities Army Ammunition Plant
New Brighton MN 55112
Landholding Agency: Army
Property Number: 21199320155
Status: Unutilized
Directions:
Comments:
Reasons: Secured Area

Bldg. 5554
Twin Cities Army Ammunition Plant
New Brighton MN 55112
Landholding Agency: Army
Property Number: 21199320156
Status: Unutilized
Directions:
Comments:
Reasons: Secured Area

Bldg. 174
null
Twin Cities Army Ammunition Plant
New Brighton MN 55112
Landholding Agency: Army
Property Number: 21199330096
Status: Unutilized
Directions:
Comments:
Reasons: Within 2000 ft. of flammable or explosive material; Secured Area

Bldg. 176
null
Twin Cities Army Ammunition Plant
New Brighton MN 55112
Landholding Agency: Army
Property Number: 21199330097
Status: Unutilized
Directions:
Comments:
Reasons: Within 2000 ft. of flammable or explosive material; Secured Area

Bldg. 517A
null
Twin Cities Army Ammunition Plant
New Brighton MN 55112
Landholding Agency: Army
Property Number: 21199330100
Status: Unutilized
Directions:
Comments:
Reasons: Within 2000 ft. of flammable or explosive material; Secured Area

Bldg. 517B
null
Twin Cities Army Ammunition Plant
New Brighton MN 55112
Landholding Agency: Army
Property Number: 21199330101
Status: Unutilized
Directions:
Comments:
Reasons: Within 2000 ft. of flammable or explosive material; Secured Area

Bldg. 517C
null
Twin Cities Army Ammunition Plant
New Brighton MN 55112
Landholding Agency: Army
Property Number: 21199330102
Status: Unutilized
Directions:
Comments:
Reasons: Within 2000 ft. of flammable or explosive material; Secured Area

Bldg. 576
null
Twin Cities Army Ammunition Plant
New Brighton MN 55112
Landholding Agency: Army
Property Number: 21199330106
Status: Unutilized
Directions:
Comments:
Reasons: Secured Area

Bldg. 585
Twin Cities Army Ammunition Plant
New Brighton MN 55112
Landholding Agency: Army
Property Number: 21199340015
Status: Unutilized
Directions:
Comments:
Reasons: Extensive deterioration; Secured Area

Bldg. 101
Twin Cities Army Ammunition Plant
New Brighton MN 55112
Landholding Agency: Army
Property Number: 21199410159
Status: Unutilized
Directions:
Comments:
Reasons: Within 2000 ft. of flammable or explosive material; Secured Area

Bldg. 102
Twin Cities Army Ammunition Plant
New Brighton MN 55112
Landholding Agency: Army
Property Number: 21199410160
Status: Unutilized
Directions:
Comments:
Reasons: Secured Area; Within 2000 ft. of flammable or explosive material

Bldg. 108
Twin Cities Army Ammunition Plant
New Brighton MN 55112
Landholding Agency: Army
Property Number: 21199410161
Status: Unutilized
Directions:
Comments:
Reasons: Secured Area; Within 2000 ft. of flammable or explosive material

Bldg. 111
Twin Cities Army Ammunition Plant
New Brighton MN 55112
Landholding Agency: Army
Property Number: 21199410162
Status: Unutilized
Directions:
Comments:
Reasons: Secured Area; Within 2000 ft. of flammable or explosive material

Bldg. 112
Twin Cities Army Ammunition Plant
New Brighton MN 55112
Landholding Agency: Army
Property Number: 21199410163
Status: Unutilized
Directions:
Comments:
Reasons: Secured Area; Within 2000 ft. of flammable or explosive material

Bldg. 114
Twin Cities Army Ammunition Plant
New Brighton MN 55112
Landholding Agency: Army
Property Number: 21199410164
Status: Unutilized
Directions:
Comments:
Reasons: Secured Area; Within 2000 ft. of flammable or explosive material

Bldg. 115
Twin Cities Army Ammunition Plant
New Brighton MN 55112
Landholding Agency: Army
Property Number: 21199410165
Status: Unutilized
Directions:
Comments:
Reasons: Secured Area; Within 2000 ft. of flammable or explosive material

Bldg. 117C
Twin Cities Army Ammunition Plant
New Brighton MN 55112
Landholding Agency: Army
Property Number: 21199410166
Status: Unutilized
Directions:
Comments:
Reasons: Within 2000 ft. of flammable or explosive material; Secured Area

Bldg. 146
Twin Cities Army Ammunition Plant
New Brighton MN 55112
Landholding Agency: Army
Property Number: 21199410167
Status: Unutilized
Directions:
Comments:
Reasons: Secured Area; Within 2000 ft. of flammable or explosive material

Bldg. 151
Twin Cities Army Ammunition Plant
New Brighton MN 55112
Landholding Agency: Army
Property Number: 21199410168
Status: Unutilized
Directions:
Comments:
Reasons: Within 2000 ft. of flammable or explosive material; Secured Area

Bldg. 152
Twin Cities Army Ammunition Plant
New Brighton MN 55112
Landholding Agency: Army
Property Number: 21199410169
Status: Unutilized
Directions:
Comments:
Reasons: Within 2000 ft. of flammable or explosive material; Secured Area

Bldg. 153
Twin Cities Army Ammunition Plant
New Brighton MN 55112
Landholding Agency: Army
Property Number: 21199410170
Status: Unutilized
Directions:
Comments:
Reasons: Within 2000 ft. of flammable or explosive material; Secured Area

Bldg. 155
Twin Cities Army Ammunition Plant
New Brighton MN 55112
Landholding Agency: Army
Property Number: 21199410171
Status: Unutilized
Directions:
Comments:
Reasons: Secured Area; Within 2000 ft. of flammable or explosive material

Bldg. 157
Twin Cities Army Ammunition Plant
New Brighton MN 55112
Landholding Agency: Army
Property Number: 21199410172
Status: Unutilized
Directions:
Comments:
Reasons: Within 2000 ft. of flammable or explosive material; Secured Area

Bldg. 167
Twin Cities Army Ammunition Plant
New Brighton MN 55112
Landholding Agency: Army
Property Number: 21199410173
Status: Unutilized
Directions:
Comments:
Reasons: Secured Area; Within 2000 ft. of flammable or explosive material; Extensive deterioration

Bldg. 172
Twin Cities Army Ammunition Plant
New Brighton MN 55112
Landholding Agency: Army
Property Number: 21199410174
Status: Unutilized
Directions:
Comments:
Reasons: Within 2000 ft. of flammable or explosive material; Secured Area

Bldg. 502
Twin Cities Army Ammunition Plant
New Brighton MN 55112
Landholding Agency: Army
Property Number: 21199410175
Status: Unutilized
Directions:
Comments:
Reasons: Secured Area; Within 2000 ft. of flammable or explosive material

Bldg. 599
Twin Cities Army Ammunition Plant
New Brighton MN 55112
Landholding Agency: Army
Property Number: 21199410186
Status: Unutilized
Directions:
Comments:
Reasons: Secured Area; Within 2000 ft. of flammable or explosive material

Bldg. 950
Twin Cities Army Ammunition Plant
New Brighton MN 55112
Landholding Agency: Army
Property Number: 21199410187
Status: Unutilized
Directions:
Comments:
Reasons: Within 2000 ft. of flammable or explosive material; Secured Area

Bldg. 951
Twin Cities Army Ammunition Plant
New Brighton MN 55112
Landholding Agency: Army
Property Number: 21199410188
Status: Unutilized
Directions:
Comments:
Reasons: Secured Area; Within 2000 ft. of flammable or explosive material

Bldg. 955
Twin Cities Army Ammunition Plant
New Brighton MN 55112
Landholding Agency: Army
Property Number: 21199410189
Status: Unutilized
Directions:
Comments:
Reasons: Within 2000 ft. of flammable or explosive material; Secured Area

Bldg. 119H
Twin Cities Army Ammunition Plant
New Brighton MN 55112
Landholding Agency: Army
Property Number: 21199420198
Status: Unutilized
Directions:
Comments:
Reasons: Within 2000 ft. of flammable or explosive material; Secured Area; Extensive deterioration

Bldg. 119P
Twin Cities Army Ammunition Plant
New Brighton MN 55112
Landholding Agency: Army
Property Number: 21199420199
Status: Unutilized
Directions:
Comments:
Reasons: Within 2000 ft. of flammable or explosive material; Secured Area; Extensive deterioration

Bldg. 119R
Twin Cities Army Ammunition Plant
New Brighton MN 55112
Landholding Agency: Army
Property Number: 21199420200
Status: Unutilized
Directions:
Comments:
Reasons: Within 2000 ft. of flammable or explosive material; Secured Area; Extensive deterioration

Bldg. 119S
Twin Cities Army Ammunition Plant
New Brighton MN 55112
Landholding Agency: Army
Property Number: 21199420201
Status: Unutilized
Directions:
Comments:
Reasons: Within 2000 ft. of flammable or explosive material; Secured Area; Extensive deterioration

Bldg. 119T
Twin Cities Army Ammunition Plant
New Brighton MN 55112
Landholding Agency: Army
Property Number: 21199420202
Status: Unutilized
Directions:
Comments:

Reasons: Within 2000 ft. of flammable or explosive material; Extensive deterioration; Secured Area

Bldg. 119U
Twin Cities Army Ammunition Plant
New Brighton MN 55112
Landholding Agency: Army
Property Number: 21199420203
Status: Unutilized
Directions:
Comments:
Reasons: Secured Area; Within 2000 ft. of flammable or explosive material; Extensive deterioration

Bldg. 125
Twin Cities Army Ammunition Plant
New Brighton MN 55112
Landholding Agency: Army
Property Number: 21199420206
Status: Unutilized
Directions:
Comments:
Reasons: Within 2000 ft. of flammable or explosive material; Secured Area

Bldg. 126
Twin Cities Army Ammunition Plant
New Brighton MN 55112
Landholding Agency: Army
Property Number: 21199420207
Status: Unutilized
Directions:
Comments:
Reasons: Secured Area; Within 2000 ft. of flammable or explosive material

Bldg. 127
Twin Cities Army Ammunition Plant
New Brighton MN 55112
Landholding Agency: Army
Property Number: 21199420208
Status: Unutilized
Directions:
Comments:
Reasons: Within 2000 ft. of flammable or explosive material; Secured Area

Bldg. 128
Twin Cities Army Ammunition Plant
New Brighton MN 55112
Landholding Agency: Army
Property Number: 21199420209
Status: Unutilized
Directions:
Comments:
Reasons: Within 2000 ft. of flammable or explosive material; Secured Area

Bldg. 129A
Twin Cities Army Ammunition Plant
New Brighton MN 55112
Landholding Agency: Army
Property Number: 21199420210
Status: Unutilized
Directions:
Comments:
Reasons: Secured Area; Within 2000 ft. of flammable or explosive material

Bldg. 129B
Twin Cities Army Ammunition Plant
New Brighton MN 55112
Landholding Agency: Army
Property Number: 21199420211
Status: Unutilized
Directions:
Comments:
Reasons: Within 2000 ft. of flammable or explosive material; Secured Area

Bldg. 130
Twin Cities Army Ammunition Plant
New Brighton MN 55112
Landholding Agency: Army
Property Number: 21199420212
Status: Unutilized
Directions:
Comments:
Reasons: Extensive deterioration; Secured Area

Bldg. 131
Twin Cities Army Ammunition Plant
New Brighton MN 55112
Landholding Agency: Army
Property Number: 21199420213
Status: Unutilized
Directions:
Comments:
Reasons: Within 2000 ft. of flammable or explosive material; Secured Area

Bldg. 132A
Twin Cities Army Ammunition Plant
New Brighton MN 55112
Landholding Agency: Army
Property Number: 21199420214
Status: Unutilized
Directions:
Comments:
Reasons: Secured Area; Within 2000 ft. of flammable or explosive material

Bldg. 132B
Twin Cities Army Ammunition Plant
New Brighton MN 55112
Landholding Agency: Army
Property Number: 21199420215
Status: Unutilized
Directions:
Comments:
Reasons: Within 2000 ft. of flammable or explosive material; Secured Area

Bldg. 135
Twin Cities Army Ammunition Plant
New Brighton MN 55112
Landholding Agency: Army
Property Number: 21199420216
Status: Unutilized
Directions:
Comments:
Reasons: Secured Area; Within 2000 ft. of flammable or explosive material

Bldg. 136
Twin Cities Army Ammunition Plant
New Brighton MN 55112
Landholding Agency: Army
Property Number: 21199420217
Status: Unutilized
Directions:
Comments:
Reasons: Within 2000 ft. of flammable or explosive material; Secured Area

Bldg. 137
Twin Cities Army Ammunition Plant
New Brighton MN 55112
Landholding Agency: Army
Property Number: 21199420218
Status: Unutilized
Directions:
Comments:
Reasons: Within 2000 ft. of flammable or explosive material

Bldg. 138A
Twin Cities Army Ammunition Plant
New Brighton MN 55112
Landholding Agency: Army
Property Number: 21199420219
Status: Unutilized
Directions:
Comments:
Reasons: Within 2000 ft. of flammable or explosive material; Secured Area

Bldg. 138B
Twin Cities Army Ammunition Plant
New Brighton MN 55112
Landholding Agency: Army
Property Number: 21199420220
Status: Unutilized
Directions:
Comments:
Reasons: Secured Area; Within 2000 ft. of flammable or explosive material

Bldg. 138C
Twin Cities Army Ammunition Plant
New Brighton MN 55112
Landholding Agency: Army
Property Number: 21199420221
Status: Unutilized
Directions:
Comments:
Reasons: Within 2000 ft. of flammable or explosive material; Secured Area

Bldg. 139A
Twin Cities Army Ammunition Plant
New Brighton MN 55112
Landholding Agency: Army
Property Number: 21199420222
Status: Unutilized
Directions:
Comments:
Reasons: Within 2000 ft. of flammable or explosive material; Secured Area

Bldg. 139B
Twin Cities Army Ammunition Plant
New Brighton MN 55112
Landholding Agency: Army
Property Number: 21199420223
Status: Unutilized
Directions:
Comments:
Reasons: Within 2000 ft. of flammable or explosive material; Secured Area

Bldg. 139C
Twin Cities Army Ammunition Plant
New Brighton MN 55112
Landholding Agency: Army
Property Number: 21199420224
Status: Unutilized
Directions:
Comments:
Reasons: Within 2000 ft. of flammable or explosive material; Secured Area

Bldg. 139D
Twin Cities Army Ammunition Plant
New Brighton MN 55112
Landholding Agency: Army
Property Number: 21199420225
Status: Unutilized
Directions:
Comments:
Reasons: Within 2000 ft. of flammable or explosive material; Secured Area

Bldg. 140A
Twin Cities Army Ammunition Plant
New Brighton MN 55112
Landholding Agency: Army
Property Number: 21199420226
Status: Unutilized
Directions:
Comments:
Reasons: Secured Area; Within 2000 ft. of flammable or explosive material

Bldg. 140B

Twin Cities Army Ammunition Plant
New Brighton MN 55112
Landholding Agency: Army
Property Number: 21199420227
Status: Unutilized
Directions:
Comments:
Reasons: Within 2000 ft. of flammable or explosive material; Secured Area

Bldg. 140C
Twin Cities Army Ammunition Plant
New Brighton MN 55112
Landholding Agency: Army
Property Number: 21199420228
Status: Unutilized
Directions:
Comments:
Reasons: Secured Area; Within 2000 ft. of flammable or explosive material

Bldg. 141A
Twin Cities Army Ammunition Plant
New Brighton MN 55112
Landholding Agency: Army
Property Number: 21199420229
Status: Unutilized
Directions:
Comments:
Reasons: Within 2000 ft. of flammable or explosive material; Secured Area

Bldg. 141B
Twin Cities Army Ammunition Plant
New Brighton MN 55112
Landholding Agency: Army
Property Number: 21199420230
Status: Unutilized
Directions:
Comments:
Reasons: Secured Area; Within 2000 ft. of flammable or explosive material

Bldg. 142
Twin Cities Army Ammunition Plant
New Brighton MN 55112
Landholding Agency: Army
Property Number: 21199420231
Status: Unutilized
Directions:
Comments:
Reasons: Within 2000 ft. of flammable or explosive material; Secured Area

Bldg. 143
Twin Cities Army Ammunition Plant
New Brighton MN 55112
Landholding Agency: Army
Property Number: 21199420232
Status: Unutilized
Directions:
Comments:
Reasons: Within 2000 ft. of flammable or explosive material; Secured Area

Bldg. 144A
Twin Cities Army Ammunition Plant
New Brighton MN 55112
Landholding Agency: Army
Property Number: 21199420233
Status: Unutilized
Directions:
Comments:
Reasons: Secured Area; Within 2000 ft. of flammable or explosive material

Bldg. 144C
Twin Cities Army Ammunition Plant
New Brighton MN 55112
Landholding Agency: Army
Property Number: 21199420234
Status: Unutilized
Directions:
Comments:
Reasons: Secured Area; Within 2000 ft. of flammable or explosive material

Bldg. 144D
Twin Cities Army Ammunition Plant
New Brighton MN 55112
Landholding Agency: Army
Property Number: 21199420235
Status: Unutilized
Directions:
Comments:
Reasons: Secured Area; Within 2000 ft. of flammable or explosive material

Bldg. 144E
Twin Cities Army Ammunition Plant
New Brighton MN 55112
Landholding Agency: Army
Property Number: 21199420236
Status: Unutilized
Directions:
Comments:
Reasons: Within 2000 ft. of flammable or explosive material; Secured Area

Bldg. 144F
Twin Cities Army Ammunition Plant
New Brighton MN 55112
Landholding Agency: Army
Property Number: 21199420237
Status: Unutilized
Directions:
Comments:
Reasons: Secured Area; Within 2000 ft. of flammable or explosive material

Bldg. 144G
Twin Cities Army Ammunition Plant
New Brighton MN 55112
Landholding Agency: Army
Property Number: 21199420238
Status: Unutilized
Directions:
Comments:
Reasons: Secured Area; Within 2000 ft. of flammable or explosive material

Bldg. 144H
Twin Cities Army Ammunition Plant
New Brighton MN 55112
Landholding Agency: Army
Property Number: 21199420239
Status: Unutilized
Directions:
Comments:
Reasons: Secured Area; Within 2000 ft. of flammable or explosive material

Bldg. 149A
Twin Cities Army Ammunition Plant
New Brighton MN 55112
Landholding Agency: Army
Property Number: 21199420240
Status: Unutilized
Directions:
Comments:
Reasons: Within 2000 ft. of flammable or explosive material; Secured Area

Bldg. 149B
Twin Cities Army Ammunition Plant
New Brighton MN 55112
Landholding Agency: Army
Property Number: 21199420241
Status: Unutilized
Directions:
Comments:
Reasons: Secured Area; Within 2000 ft. of flammable or explosive material

Bldg. 149C
Twin Cities Army Ammunition Plant
New Brighton MN 55112
Landholding Agency: Army
Property Number: 21199420242
Status: Unutilized
Directions:
Comments:
Reasons: Secured Area; Within 2000 ft. of flammable or explosive material

Bldg. 149D
Twin Cities Army Ammunition Plant
New Brighton MN 55112
Landholding Agency: Army
Property Number: 21199420243
Status: Unutilized
Directions:
Comments:
Reasons: Within 2000 ft. of flammable or explosive material; Secured Area

Bldg. 149E
Twin Cities Army Ammunition Plant
New Brighton MN 55112
Landholding Agency: Army
Property Number: 21199420244
Status: Unutilized
Directions:
Comments:
Reasons: Within 2000 ft. of flammable or explosive material; Secured Area

Bldg. 149F
Twin Cities Army Ammunition Plant
New Brighton MN 55112
Landholding Agency: Army
Property Number: 21199420245
Status: Unutilized
Directions:
Comments:
Reasons: Within 2000 ft. of flammable or explosive material; Secured Area

Bldg. 149G
Twin Cities Army Ammunition Plant
New Brighton MN 55112
Landholding Agency: Army
Property Number: 21199420246
Status: Unutilized
Directions:
Comments:
Reasons: Secured Area; Within 2000 ft. of flammable or explosive material

Bldg. 149H
Twin Cities Army Ammunition Plant
New Brighton MN 55112
Landholding Agency: Army
Property Number: 21199420247
Status: Unutilized
Directions:
Comments:
Reasons: Within 2000 ft. of flammable or explosive material; Secured Area

Bldg. 149I
Twin Cities Army Ammunition Plant
New Brighton MN 55112
Landholding Agency: Army
Property Number: 21199420248
Status: Unutilized
Directions:
Comments:
Reasons: Within 2000 ft. of flammable or explosive material; Secured Area

Bldg. 149J
Twin Cities Army Ammunition Plant
New Brighton MN 55112
Landholding Agency: Army
Property Number: 21199420249
Status: Unutilized

Directions:
Comments:
Reasons: Within 2000 ft. of flammable or explosive material; Secured Area

Bldg. 149K
Twin Cities Army Ammunition Plant
New Brighton MN 55112
Landholding Agency: Army
Property Number: 21199420250
Status: Unutilized
Directions:
Comments:
Reasons: Secured Area; Within 2000 ft. of flammable or explosive material

Bldg. 149L
Twin Cities Army Ammunition Plant
New Brighton MN 55112
Landholding Agency: Army
Property Number: 21199420251
Status: Unutilized
Directions:
Comments:
Reasons: Secured Area; Within 2000 ft. of flammable or explosive material

Bldg. 149M
Twin Cities Army Ammunition Plant
New Brighton MN 55112
Landholding Agency: Army
Property Number: 21199420252
Status: Unutilized
Directions:
Comments:
Reasons: Within 2000 ft. of flammable or explosive material; Secured Area

Bldg. 149N
Twin Cities Army Ammunition Plant
New Brighton MN 55112
Landholding Agency: Army
Property Number: 21199420253
Status: Unutilized
Directions:
Comments:
Reasons: Within 2000 ft. of flammable or explosive material; Secured Area

Bldg. 159
Twin Cities Army Ammunition Plant
New Brighton MN 55112
Landholding Agency: Army
Property Number: 21199420254
Status: Unutilized
Directions:
Comments:
Reasons: Within 2000 ft. of flammable or explosive material

Bldg. 177
Twin Cities Army Ammunition Plant
New Brighton MN 55112
Landholding Agency: Army
Property Number: 21199420256
Status: Unutilized
Directions:
Comments:
Reasons: Secured Area; Within 2000 ft. of flammable or explosive material

Bldg. 180
Twin Cities Army Ammunition Plant
New Brighton MN 55112
Landholding Agency: Army
Property Number: 21199420257
Status: Unutilized
Directions:
Comments:
Reasons: Secured Area; Within 2000 ft. of flammable or explosive material

Bldg. 191
Twin Cities Army Ammunition Plant
New Brighton MN 55112
Landholding Agency: Army
Property Number: 21199420258
Status: Unutilized
Directions:
Comments:
Reasons: Extensive deterioration; Within 2000 ft. of flammable or explosive material; Secured Area

Bldg. 192A
Twin Cities Army Ammunition Plant
New Brighton MN 55112
Landholding Agency: Army
Property Number: 21199420259
Status: Unutilized
Directions:
Comments:
Reasons: Secured Area; Within 2000 ft. of flammable or explosive material

Bldg. 192B
Twin Cities Army Ammunition Plant
New Brighton MN 55112
Landholding Agency: Army
Property Number: 21199420260
Status: Unutilized
Directions:
Comments:
Reasons: Secured Area; Within 2000 ft. of flammable or explosive material

Bldg. 195
Twin Cities Army Ammunition Plant
New Brighton MN 55112
Landholding Agency: Army
Property Number: 21199420261
Status: Unutilized
Directions:
Comments:
Reasons: Secured Area; Within 2000 ft. of flammable or explosive material

Bldg. 196
Twin Cities Army Ammunition Plant
New Brighton MN 55112
Landholding Agency: Army
Property Number: 21199420262
Status: Unutilized
Directions:
Comments:
Reasons: Secured Area; Within 2000 ft. of flammable or explosive material

Bldg. 199
Twin Cities Army Ammunition Plant
New Brighton MN 55112
Landholding Agency: Army
Property Number: 21199420263
Status: Unutilized
Directions:
Comments:
Reasons: Within 2000 ft. of flammable or explosive material; Secured Area

Bldg. 303
Twin Cities Army Ammunition Plant
New Brighton MN 55112
Landholding Agency: Army
Property Number: 21199420264
Status: Unutilized
Directions:
Comments:
Reasons: Secured Area; Within 2000 ft. of flammable or explosive material

Bldg. 304
Twin Cities Army Ammunition Plant
New Brighton MN 55112
Landholding Agency: Army
Property Number: 21199420265
Status: Unutilized
Directions:
Comments:
Reasons: Secured Area; Within 2000 ft. of flammable or explosive material

Bldg. 314
Twin Cities Army Ammunition Plant
New Brighton MN 55112
Landholding Agency: Army
Property Number: 21199420266
Status: Unutilized
Directions:
Comments:
Reasons: Extensive deterioration; Secured Area; Within 2000 ft. of flammable or explosive material

Bldg. 315
Twin Cities Army Ammunition Plant
New Brighton MN 55112
Landholding Agency: Army
Property Number: 21199420267
Status: Unutilized
Directions:
Comments:
Reasons: Secured Area; Within 2000 ft. of flammable or explosive material

Bldg. 327
Twin Cities Army Ammunition Plant
New Brighton MN 55112
Landholding Agency: Army
Property Number: 21199420268
Status: Unutilized
Directions:
Comments:
Reasons: Secured Area; Within 2000 ft. of flammable or explosive material

Bldg. 328
Twin Cities Army Ammunition Plant
New Brighton MN 55112
Landholding Agency: Army
Property Number: 21199420269
Status: Unutilized
Directions:
Comments:
Reasons: Secured Area; Within 2000 ft. of flammable or explosive material

Bldg. 329
Twin Cities Army Ammunition Plant
New Brighton MN 55112
Landholding Agency: Army
Property Number: 21199420270
Status: Unutilized
Directions:
Comments:
Reasons: Within 2000 ft. of flammable or explosive material; Secured Area

Bldg. 330
Twin Cities Army Ammunition Plant
New Brighton MN 55112
Landholding Agency: Army
Property Number: 21199420271
Status: Unutilized
Directions:
Comments:
Reasons: Secured Area; Within 2000 ft. of flammable or explosive material

Bldg. 338B
Twin Cities Army Ammunition Plant
New Brighton MN 55112
Landholding Agency: Army
Property Number: 21199420272
Status: Unutilized
Directions:
Comments:

Reasons: Within 2000 ft. of flammable or explosive material; Secured Area

Bldg. 338C
Twin Cities Army Ammunition Plant
New Brighton MN 55112
Landholding Agency: Army
Property Number: 21199420273
Status: Unutilized
Directions:
Comments:
Reasons: Within 2000 ft. of flammable or explosive material; Secured Area

Bldg. 338D
Twin Cities Army Ammunition Plant
New Brighton MN 55112
Landholding Agency: Army
Property Number: 21199420274
Status: Unutilized
Directions:
Comments:
Reasons: Secured Area; Within 2000 ft. of flammable or explosive material

Bldg. 372
Twin Cities Army Ammunition Plant
New Brighton MN 55112
Landholding Agency: Army
Property Number: 21199420275
Status: Unutilized
Directions:
Comments:
Reasons: Within 2000 ft. of flammable or explosive material; Secured Area

Bldg. 519B
Twin Cities Army Ammunition Plant
New Brighton MN 55112
Landholding Agency: Army
Property Number: 21199420276
Status: Unutilized
Directions:
Comments:
Reasons: Extensive deterioration; Secured Area; Within 2000 ft. of flammable or explosive material

Bldg. 908
Twin Cities Army Ammunition Plant
New Brighton MN 55112
Landholding Agency: Army
Property Number: 21199420279
Status: Unutilized
Directions:
Comments:
Reasons: Within 2000 ft. of flammable or explosive material; Secured Area; Extensive deterioration

Bldg. 917C
Twin Cities Army Ammunition Plant
New Brighton MN 55112
Landholding Agency: Army
Property Number: 21199420280
Status: Unutilized
Directions:
Comments:
Reasons: Within 2000 ft. of flammable or explosive material; Extensive deterioration; Secured Area

Bldg. 1190
Twin Cities Army Ammunition Plant
New Brighton MN 55112
Landholding Agency: Army
Property Number: 21199420281
Status: Unutilized
Directions:
Comments:
Reasons: Extensive deterioration; Within 2000 ft. of flammable or explosive material; Secured Area

Bldg. 1490
Twin Cities Army Ammunition Plant
New Brighton MN 55112
Landholding Agency: Army
Property Number: 21199420282
Status: Unutilized
Directions:
Comments:
Reasons: Within 2000 ft. of flammable or explosive material; Secured Area

Bldg. 5154
Twin Cities Army Ammunition Plant
New Brighton MN 55112
Landholding Agency: Army
Property Number: 21199420283
Status: Unutilized
Directions:
Comments:
Reasons: Secured Area; Within 2000 ft. of flammable or explosive material

Bldg. 158
Twin Cities Army Ammunition Plant
New Brighton MN 55112
Landholding Agency: Army
Property Number: 21199430060
Status: Unutilized
Directions:
Comments:
Reasons: Secured Area

Bldg. 567A
Twin Cities Army Ammunition Plant
New Brighton MN 55112
Landholding Agency: Army
Property Number: 21199430062
Status: Unutilized
Directions:
Comments:
Reasons: Secured Area

Bldg. 567B
Twin Cities Army Ammunition Plant
New Brighton MN 55112
Landholding Agency: Army
Property Number: 21199430063
Status: Unutilized
Directions:
Comments:
Reasons: Secured Area

Bldg. 709
Twin Cities Army Ammunition Plant
New Brighton MN 55112
Landholding Agency: Army
Property Number: 21199430064
Status: Unutilized
Directions:
Comments:
Reasons: Secured Area

Bldgs. 570, 571
Twin Cities AAP
Arden Hills MN 55112–3928
Landholding Agency: Army
Property Number: 21200130053
Status: Excess
GSA Number:
Reasons: Within 2000 ft. of flammable or explosive material; Secured Area

Bldgs. 917A, 917B
Twin Cities AAP
Arden Hills MN 55112–3928
Landholding Agency: Army
Property Number: 21200130054
Status: Excess
GSA Number:
Reasons: Within 2000 ft. of flammable or explosive material; Secured Area

Missouri

Lake City Army Ammo. Plant
59
Independence MO 64050
Landholding Agency: Army
Property Number: 21199013666
Status: Unutilized
Directions:
Comments:
Reasons: Secured Area

Lake City Army Ammo. Plant
59A
Independence MO 64050
Landholding Agency: Army
Property Number: 21199013667
Status: Unutilized
Directions:
Comments:
Reasons: Secured Area

Lake City Army Ammo. Plant
59C
Independence MO 64050
Landholding Agency: Army
Property Number: 21199013668
Status: Unutilized
Directions:
Comments:
Reasons: Secured Area

Lake City Army Ammo. Plant
59B
Independence MO 64050
Landholding Agency: Army
Property Number: 21199013669
Status: Unutilized
Directions:
Comments:
Reasons: Secured Area

Bldg #1
St. Louis Army Ammunition Plant
4800 Goodfellow Blvd.
St. Louis MO 63120–1798
Landholding Agency: Army
Property Number: 21199120067
Status: Unutilized
Directions:
Comments:
Reasons: Secured Area

Bldg #2
St. Louis Army Ammunition Plant
4800 Goodfellow Blvd.
St. Louis MO 63120–1798
Landholding Agency: Army
Property Number: 21199120068
Status: Unutilized
Directions:
Comments:
Reasons: Secured Area

Bldg. T–2350
Ft. Leonard Wood
Ft. Leonard Wood MO 65473
Landholding Agency: Army
Property Number: 21199430075
Status: Underutilized
Directions:
Comments:
Reasons: Within 2000 ft. of flammable or explosive material

Bldg. 18
Lake City Army Ammunition Plant
Independence MO 64050
Landholding Agency: Army

Property Number: 21199530134
Status: Unutilized
Directions:
Comments:
Reasons: Within 2000 ft. of flammable or explosive material; Secured Area

Bldg. 149
Lake City Army Ammunition Plant
Independence MO 64050
Landholding Agency: Army
Property Number: 21199530136
Status: Unutilized
Directions:
Comments:
Reasons: Within 2000 ft. of flammable or explosive material; Secured Area

Bldg. 4
St. Louis Army Ammunition Plant
St. Louis MO 63120–1584
Landholding Agency: Army
Property Number: 21199610469
Status: Unutilized
Directions:
Comments:
Reasons: Extensive deterioration; Secured Area

Bldg. 7
St. Louis Army Ammunition Plant
St. Louis MO 63120–1584
Landholding Agency: Army
Property Number: 21199610470
Status: Unutilized
Directions:
Comments:
Reasons: Secured Area; Within 2000 ft. of flammable or explosive material

Bldg. 11
St. Louis Army Ammunition Plant
St. Louis MO 63120–1584
Landholding Agency: Army
Property Number: 21199610471
Status: Unutilized
Directions:
Comments:
Reasons: Secured Area

Bldg. 13
St. Louis Army Ammunition Plant
St. Louis MO 63120–1584
Landholding Agency: Army
Property Number: 21199610472
Status: Unutilized
Directions:
Comments:
Reasons: Secured Area

Bldg. 14
St. Louis Army Ammunition Plant
St. Louis MO 63120–1584
Landholding Agency: Army
Property Number: 21199610473
Status: Unutilized
Directions:
Comments:
Reasons: Extensive deterioration; Secured Area

Bldg. 15
St. Louis Army Ammunition Plant
St. Louis MO 63120–1584
Landholding Agency: Army
Property Number: 21199610474
Status: Unutilized
Directions:
Comments:
Reasons: Secured Area; Extensive deterioration

Bldg. 16
St. Louis Army Ammunition Plant
St. Louis MO 63120–1584
Landholding Agency: Army
Property Number: 21199610475
Status: Unutilized
Directions:
Comments:
Reasons: Secured Area; Extensive deterioration

Bldg. 5396
Fort Leonard Wood
Pulaski MO 65473–8994
Landholding Agency: Army
Property Number: 21199910020
Status: Unutilized
GSA Number:
Reasons: Extensive deterioration

Bldg. 5539
Fort Leonard Wood
Pulaski MO 65473–8994
Landholding Agency: Army
Property Number: 21199910021
Status: Unutilized
GSA Number:
Reasons: Extensive deterioration

6 Bldgs.
Lake City Army Ammunition Plant
40A, B, C, 41A, 41B, 41C
Independence MO 64050
Landholding Agency: Army
Property Number: 21199910023
Status: Excess
GSA Number:
Reasons: Within 2000 ft. of flammable or explosive material; Secured Area

3 Bldgs.
Lake City Army Ammunition Plant
52B, 52C, 71A
Independence MO 64050
Landholding Agency: Army
Property Number: 21199910025
Status: Excess
GSA Number:
Reasons: Secured Area; Within 2000 ft. of flammable or explosive material

Bldg. 83
Lake City Army Ammunition Plant
Independence MO 64050
Landholding Agency: Army
Property Number: 21199910027
Status: Excess
GSA Number:
Reasons: Within 2000 ft. of flammable or explosive material; Secured Area

Bldgs. 131A, 132A
Lake City Army Ammunition Plant
Independence MO 64050
Landholding Agency: Army
Property Number: 21199910028
Status: Excess
GSA Number:
Reasons: Secured Area; Within 2000 ft. of flammable or explosive material

Bldgs. 133A–133E
Lake City Army Ammunition Plant
Independence MO 64050
Landholding Agency: Army
Property Number: 21199910029
Status: Excess
GSA Number:
Reasons: Secured Area; Within 2000 ft. of flammable or explosive material

10 Bldgs.
Lake City Army Ammunition Plant
134A–134E, 135A–135E
Independence MO 64050
Landholding Agency: Army
Property Number: 21199910030
Status: Excess
GSA Number:
Reasons: Within 2000 ft. of flammable or explosive material; Secured Area

Bldgs. 141A–141B
Lake City Army Ammunition Plant
Independence MO 64050
Landholding Agency: Army
Property Number: 21199910033
Status: Excess
GSA Number:
Reasons: Secured Area; Within 2000 ft. of flammable or explosive material

Bldgs. 144A, 144B
Lake City Army Ammunition Plant
Independence MO 64050
Landholding Agency: Army
Property Number: 21199910034
Status: Excess
GSA Number:
Reasons: Within 2000 ft. of flammable or explosive material; Secured Area

3 Bldgs.
Lake City Army Ammunition Plant
145A, 145B, 145C
Independence MO 65050
Landholding Agency: Army
Property Number: 21199910035
Status: Excess
GSA Number:
Reasons: Within 2000 ft. of flammable or explosive material; Secured Area

Bldg. 3A
Lake City Army Ammunition Plant
Independence MO 64050
Landholding Agency: Army
Property Number: 21199920082
Status: Unutilized
GSA Number:
Reasons: Secured Area; Within 2000 ft. of flammable or explosive material

Bldg. 58A
Lake City AAP
Independence MO 64050
Landholding Agency: Army
Property Number: 21200030049
Status: Underutilized
GSA Number:
Reasons: Secured Area

Bldg. P4122
U.S. Army Reserve Center
St. Louis MO 63120–1794
Landholding Agency: Army
Property Number: 21200240055
Status: Unutilized
GSA Number:
Reasons: Extensive deterioration

Bldgs. P4074, P4072, P4073
St. Louis Ordnance Plant
St. Louis MO 63120–1794
Landholding Agency: Army
Property Number: 21200310019
Status: Unutilized
GSA Number:
Reasons: Extensive deterioration

Bldgs. 02200, 02205, 02223
Fort Leonard Wood
Ft. Leonard Wood MO 65743–8944
Landholding Agency: Army
Property Number: 21200320025

Status: Unutilized
GSA Number:
Reasons: Extensive deterioration

Bldg. 01355
Fort Leonard Wood
Ft. Leonard Wood MO 65743–8944
Landholding Agency: Army
Property Number: 21200330028
Status: Unutilized
GSA Number:
Reasons: Extensive deterioration

Bldg. 01356
Fort Leonard Wood
Ft. Leonard Wood MO 65743–8944
Landholding Agency: Army
Property Number: 21200330029
Status: Unutilized
GSA Number:
Reasons: Extensive deterioration

Bldg. 01360
Fort Leonard Wood
Ft. Leonard Wood MO 65743–8944
Landholding Agency: Army
Property Number: 21200330030
Status: Unutilized
GSA Number:
Reasons: Extensive deterioration

Bldg. 01361
Fort Leonard Wood
Ft. Leonard Wood MO 65743–8944
Landholding Agency: Army
Property Number: 21200330031
Status: Unutilized
GSA Number:
Reasons: Extensive deterioration

Bldgs. 5402, 5742
Fort Leonard Wood
Ft. Leonard Wood MO 65743–8944
Landholding Agency: Army
Property Number: 21200430029
Status: Unutilized
Reasons: Extensive deterioration

Bldg. 00645
Fort Leonard Wood
Pulaski MO 65743
Landholding Agency: Army
Property Number: 21200640051
Status: Unutilized
Reasons: Extensive deterioration

Bldg. 02553
Fort Leonard Wood
Pulaski MO 65743
Landholding Agency: Army
Property Number: 21200640052
Status: Unutilized
Reasons: Extensive deterioration

Bldgs. 1448, 1449
Fort Leonard Wood
Pulaski MO 65473
Landholding Agency: Army
Property Number: 21200740145
Status: Unutilized
Reasons: Extensive deterioration

Bldgs. 2841, 2842
Fort Leonard Wood
Pulaski MO 65473
Landholding Agency: Army
Property Number: 21200740146
Status: Unutilized
Reasons: Extensive deterioration

4 Bldgs.
Fort Leonard Wood
5234, 5339, 5345, 5351
Pulaski MO 65473
Landholding Agency: Army
Property Number: 21200740147
Status: Unutilized
Reasons: Extensive deterioration

Bldgs. 5535, 5742
Fort Leonard Wood
Pulaski MO 65473
Landholding Agency: Army
Property Number: 21200740148
Status: Unutilized
Reasons: Extensive deterioration

Bldgs. 0071B, 0072
Lake City Army Ammo Plant
Independence MO 64056
Landholding Agency: Army
Property Number: 21200820001
Status: Unutilized
Reasons: Extensive deterioration; Secured Area; Within 2000 ft. of flammable or explosive material

Bldgs. 2282, 2841, 2842
Fort Leonard Wood
Pulaski MO 65473
Landholding Agency: Army
Property Number: 21200830017
Status: Underutilized
Reasons: Within 2000 ft. of flammable or explosive material; Secured Area

Bldg. 528
Weldon Springs LTA
Saint Charles MO 63304
Landholding Agency: Army
Property Number: 21200840034
Status: Unutilized
Reasons: Extensive deterioration

5 Bldgs.
Fort Leonard Wood
Pulaski MO 65473
Landholding Agency: Army
Property Number: 21200840035
Status: Unutilized
Directions: 05360, 05361, 05367, 05368, 05369
Reasons: Secured Area

6 Bldgs.
Fort Leonard Wood
Pulaski MO 65473
Landholding Agency: Army
Property Number: 21200840036
Status: Unutilized
Directions: 05370, 05371, 05372, 05373, 05374, 05376
Reasons: Secured Area

9 Bldgs.
Fort Leonard Wood
Pulaski MO 65473
Landholding Agency: Army
Property Number: 21200840037
Status: Unutilized
Directions: 06120, 06124, 06125, 06128, 06129, 06130, 06131, 06133, 06135
Reasons: Secured Area

14 Bldgs.
Fort Leonard Wood
Pulaski MO 65473
Landholding Agency: Army
Property Number: 21200920048
Status: Unutilized
Directions: 2831, 2832, 2833, 2834, 2835, 2836, 2837, 2838, 2839, 2840, 2843, 2844, 2845, 4970
Reasons: Secured Area

Bldgs. 204, 802, 2563
Fort Leonard Wood
Pulaski MO 65473
Landholding Agency: Army
Property Number: 21200930012
Status: Unutilized
Reasons: Secured Area

13 Bldgs.
Fort Leonard Wood
Pulaski MO 65473
Landholding Agency: Army
Property Number: 21200940044
Status: Unutilized
Directions: 401, 761, 762, 766, 790, 791, 792, 793, 794, 795, 796, 797, 798
Reasons: Secured Area

7 Bldgs.
Fort Leonard Wood
Pulaski MO 65473
Landholding Agency: Army
Property Number: 21200940045
Status: Unutilized
Directions: 851, 852, 853, 854, 857, 859, 2305
Reasons: Secured Area

9 Bldgs.
Fort Leonard Wood
Pulaski MO 65473
Landholding Agency: Army
Property Number: 21200940046
Status: Unutilized
Directions: 9004, 9005, 9007, 9009, 9011, 9013, 9015, 9017, 9029
Reasons: Secured Area

9 Bldgs.
Fort Leonard Wood
Pulaski MO 65473
Landholding Agency: Army
Property Number: 21200940047
Status: Unutilized
Directions: 9031, 9033, 9035, 9037, 9039, 9041, 9043, 9045, 9047
Reasons: Secured Area

6 Bldgs.
Fort Leonard Wood
Pulaski MO 65473
Landholding Agency: Army
Property Number: 21200940048
Status: Unutilized
Directions: 9057, 9059, 9061, 9063, 9071, 12315
Reasons: Secured Area

Bldg. 06020
Fort Leonard Wood
Pulaski MO 65473
Landholding Agency: Army
Property Number: 21201010010
Status: Unutilized
Reasons: Floodway; Secured Area

15 Bldgs.
Lake City Army Ammo Plant
Independence MO 64051
Landholding Agency: Army
Property Number: 21201010011
Status: Unutilized
Directions: 11A, 20B, 22A, 22B, 22C, 23A, 23B, 23C, 24A, 24B, 24C, 24D, 24E, 25A, 29A
Reasons: Within 2000 ft. of flammable or explosive material; Secured Area

9 Bldgs.
Lake City Army Ammo Plant
Independence MO 64051
Landholding Agency: Army
Property Number: 21201010012
Status: Unutilized
Directions: 31, 32A, 33A, 33B, 34A, 34B, 38F, 38G, 38H

Reasons: Secured Area; Within 2000 ft. of flammable or explosive material

9 Bldgs.
Lake City Army Ammo Plant
Independence MO 64051
Landholding Agency: Army
Property Number: 21201010013
Status: Unutilized
Directions: 52A, 53, 55, 59, 60, 73W, 79, 79A, 79B
Reasons: Within 2000 ft. of flammable or explosive material; Secured Area

7 Bldgs.
Lake City Army Ammo Plant
Independence MO 64051
Landholding Agency: Army
Property Number: 21201010014
Status: Unutilized
Directions: 80F, 91D, 91F, 94D 120A, 120D, 120G
Reasons: Secured Area; Within 2000 ft. of flammable or explosive material

6 Bldgs.
Lake City Army Ammo Plant
Independence MO 64051
Landholding Agency: Army
Property Number: 21201010015
Status: Unutilized
Directions: T056R, T94B, T94C, T239, T247, T260
Reasons: Secured Area; Within 2000 ft. of flammable or explosive material

13 Bldgs.
Fort Leonard Wood
Pulaski MO 65473
Landholding Agency: Army
Property Number: 21201020013
Status: Unutilized
Directions: 182, 701 702, 703, 704, 705, 705A, 706, 707, 708, 709, 710, 2101
Reasons: Secured Area

14 Bldgs.
Lake City AAP
Independence MO 64051
Landholding Agency: Army
Property Number: 21201040010
Status: Unutilized
Directions: 59, 59A, 59B, 59C, 60, 66A, 66B, 66C, 66D, 66E, 67, 70A 70B 80D
Reasons: Secured Area; Within 2000 ft. of flammable or explosive material

10 Bldgs.
Fort Leonard Wood
Pulaski MO 65473
Landholding Agency: Army
Property Number: 21201040011
Status: Unutilized
Directions: 1228, 1255, 1269, 2101, 2112, 2551, 2552, 5280, 5506, 6824
Reasons: Secured Area

Facility 29995
Fort Leonard Wood
Pulaski MO 65473
Landholding Agency: Army
Property Number: 21201040012
Status: Unutilized
Reasons: Secured Area

Harry S. Truman Reservoir
15968 Truman Rd.
Warsaw MO 65355
Landholding Agency: Army
Property Number: 21201110001
Status: Underutilized
Directions: 07015 and L43002
Reasons: Extensive deterioration

12 Bldgs.
Ft. Leonard Woods
Ft. Leonard Woods MO 65473
Landholding Agency: Army
Property Number: 21201110043
Status: Excess
Directions: 00642, 00650, 00651, 00652, 00653, 00654, 00655, 00656, 00657, 00658, 00659, 00660
Reasons: Secured Area

Bldgs. 01604 and 05130
Ft. Leonard Woods
Ft. Leonard Woods MO 65473
Landholding Agency: Army
Property Number: 21201110044
Status: Excess
Reasons: Extensive deterioration; Secured Area

TA002
Ft. Leonard Woods
Ft. Leonard Woods MO 65473
Landholding Agency: Army
Property Number: 21201110061
Status: Excess
Reasons: Secured Area; Extensive deterioration

8 Bldgs.
Ft. Leonard Woods
Ft. Leonard Woods MO 65473
Landholding Agency: Army
Property Number: 21201110062
Status: Excess
Directions: 00618, 0618A, 00618B, 00619, 0619A, 0619B, 00906, 00907
Reasons: Secured Area

Bldgs. 5130 and 5136
Ft. Leonard Woods
FLW MO
Landholding Agency: Army
Property Number: 21201120011
Status: Excess
Reasons: Secured Area; Extensive deterioration

Bldg. 1604
Ft. Leonard Woods
FLW MO
Landholding Agency: Army
Property Number: 21201120012
Status: Excess
Reasons: Extensive deterioration; Secured Area

Bldg. 1269
Ft. Leonard Woods
FLW MO
Landholding Agency: Army
Property Number: 21201120013
Status: Excess
Reasons: Secured Area

Bldg. 1255
Ft. Leonard Woods
FLW MO
Landholding Agency: Army
Property Number: 21201120014
Status: Excess
Reasons: Secured Area

Bldg. 1228
Ft. Leonard Woods
FLW MO
Landholding Agency: Army
Property Number: 21201120015
Status: Excess
Reasons: Secured Area

Bldgs. 906 and 907
Ft. Leonard Woods
FLW MO
Landholding Agency: Army
Property Number: 21201120016
Status: Excess
Reasons: Secured Area

14 Bldgs.
Camp Clark
Nevada MO 64772
Landholding Agency: Army
Property Number: 21201130046
Status: Unutilized
Directions: K0001, K0002, K0003, K0004, K0005, K0006, K0007, K0008, K0010, K0012, K0014, K0016, K0018, K0020
Reasons: Extensive deterioration

11 Bldgs.
Camp Clark
Nevada MO 64772
Landholding Agency: Army
Property Number: 21201130047
Status: Unutilized
Directions: J0006, J0007, J0008, J0009, J0010, J0011, J0012, J0013, J0015, J0017, J0019
Reasons: Secured Area; Extensive deterioration

12 Bldgs.
Camp Clark
Nevada MO 64772
Landholding Agency: Army
Property Number: 21201130048
Status: Unutilized
Directions: 435, 436, 438, 460, 466, 504, 506, J0001, J0002, J0003, J0004, J0005
Reasons: Extensive deterioration; Secured Area

13 Bldgs.
Camp Clark
Nevada MO 64772
Landholding Agency: Army
Property Number: 21201130049
Status: Unutilized
Directions: 00383, 00384, 00385, 00386, 00388, 00389, 00391, 00392, 00402, 00410, 00411, 00425, 00433
Reasons: Extensive deterioration; Secured Area

15 Bldgs.
Camp Clark
Nevada MO 64772
Landholding Agency: Army
Property Number: 21201130050
Status: Unutilized
Directions: 00127, 00329, 00337, 00344, 00352, 00356, 00360, 00362, 00363, 00365, 00366, 00367, 00372, 00376, 00380
Reasons: Secured Area; Extensive deterioration

Bldg T62–9
Lake City Army Ammunition Plant
Independence MO 64051
Landholding Agency: Army
Property Number: 21201140071
Status: Underutilized
Reasons: Contamination; Secured Area

2 Bldgs.
Railroad Ave.
Fort Leonard Wood MO 65473
Landholding Agency: Army
Property Number: 21201140072
Status: Unutilized
Directions: 02351, 02352
Reasons: Secured Area

11 Bldgs.

Ft. Leonard Woods
Ft. Leonard Woods MO 65473
Landholding Agency: Army
Property Number: 21201220019
Status: Excess
Directions: 499, 720, 745, 2555, 2556, 2557, 2558, 5076, 8208, 8370, 30
Comments: Nat'l security concerns; public access denied & no alternative method to gain access w/out comprising nat'l security
Reasons: Secured Area

14 Buildings
Camp Crowder
Neosho MO 64850
Landholding Agency: Army
Property Number: 21201230010
Status: Unutilized
Directions: 5, 6, 8, 9, 10, 12, 18, 34, 35, 36, 37, 38, 39, 51
Comments: Military personnel only; public access denied & no alternative method to gain access w/out comprising nat'l security
Reasons: Secured Area

11 Buildings
Ft. Leonard Wood
Ft. Leonard Wood MO 65473
Landholding Agency: Army
Property Number: 21201230032
Status: Underutilized
Directions: 2314, 2313, 1614, 1230, 786, 689, 404, 690, 763, 764, 766
Comments: No public access & no alternative method w/out comprising nat'l security
Reasons: Secured Area

19 Buildings
Ft. Leonard Wood
Ft. Leonard Wood MO 65473
Landholding Agency: Army
Property Number: 21201230033
Status: Unutilized
Directions: 9613, 9611, 6127, 6125, 6124, 6120, 5125, 5124, 5122, 5073, 2565, 2349, 1134, 978, 975, 758, 9615, 9617, 9619
Comments: No public access & no alternative method to gain access w/out comprising nat'l security
Reasons: Secured Area

4 Buildings
Ft. Leonard Wood
Ft. Leonard Wood MO 65473
Landholding Agency: Army
Property Number: 21201230038
Status: Unutilized
Directions: 565, 566, 567, 569
Comments: No public access & no alternative method to gain access w/out comprising nat'l security
Reasons: Secured Area

5 Buildings
Ft. Leonard Wood
Ft. Leonard Wood MO 65473
Landholding Agency: Army
Property Number: 21201230039
Status: Underutilized
Directions: 664, 665, 669, 686, 687
Comments: No public access & no alternative method to gain access w/out comprising nat'l security
Reasons: Secured Area

3 Buildings
Ft. Leonard Wood
Ft. Leonard Wood MO 65473
Landholding Agency: Army
Property Number: 21201230040
Status: Unutilized
Directions: 688,759,760
Comments: No public access & no alternative method to gain access w/out comprising nat'l security
Reasons: Secured Area

9 Buildings
Ft. Leonard Wood
Ft. Leonard Wood MO 65473
Landholding Agency: Army
Property Number: 21201230041
Status: Excess
Directions: 711,712,713,714,715,720,721,722,723
Comments: No public access & no alternative method to gain access w/out comprising nat'l security
Reasons: Secured Area

Bldg. 724
Utah St.
Ft. Leonard Wood MO 65473
Landholding Agency: Army
Property Number: 21201230059
Status: Excess
Comments: No public access; no alternative method for public to gain access w/out comprising nat'l security
Reasons: Secured Area

Bldg. 31
Camp Crowder
Neosha MO 64850
Landholding Agency: Army
Property Number: 21201230061
Status: Unutilized
Comments: Military personnel/authorized use personnel; public access denied & no alternative method for public to gain access w/out comprising nat'l security
Reasons: Secured Area

Montana

Bldg. P0516
Fort Harrison
Ft. Harrison MT 59636
Landholding Agency: Army
Property Number: 21200420104
Status: Excess
Reasons: Secured Area; Extensive deterioration

4 Bldgs.
Ft. Harrison
0003A, T0003, T0024, T0562
Lewis & Clark MT 59636
Landholding Agency: Army
Property Number: 21200740018
Status: Unutilized
Reasons: Extensive deterioration

Nevada

Bldg. 000A4
Hawthorne Army Ammunition Plant
Enlisted Barracks/Mess Hall
Hawthorne NV 89415
Landholding Agency: Army
Property Number: 21199012013
Status: Unutilized
Directions: East side of Decatur Street, North of Maine Avenue in the Industrial Area.
Comments:
Reasons: Secured Area; Within airport runway clear zone

Bldg. 292
Hawthorne Army Ammunition Plant
Officers Barracks with Dining Facility
Hawthorne NV 89415
Landholding Agency: Army
Property Number: 21199013614
Status: Unutilized
Directions: North side of Maine Avenue west of Pringle Road
Comments:
Reasons: Secured Area

Bldg. 101–2
Hawthorne Army Ammunition Plant
Group Mine Filling Plant, Central Mag. Area
Hawthorne NV 89415
Landholding Agency: Army
Property Number: 21199013615
Status: Underutilized
Directions:
Comments:
Reasons: Secured Area; Within 2000 ft. of flammable or explosive material

Bldg. 101–3
Hawthorne Army Ammunition Plant
Group Mine Filling Plant, Central Mag. Area
Hawthrone NV 89415
Landholding Agency: Army
Property Number: 21199013616
Status: Underutilized
Directions:
Comments:
Reasons: Within 2000 ft. of flammable or explosive material; Secured Area

Bldg. 101–4
Hawthorne Army Ammunition Plant
Group Mine Filling Plant, Central Mag. Area
Hawthorne NV 89415
Landholding Agency: Army
Property Number: 21199013617
Status: Underutilized
Directions:
Comments:
Reasons: Secured Area; Within 2000 ft. of flammable or explosive material

Bldg. 101–5
Hawthorne Army Ammunition Plant
Group Mine Filling Plant, Central Mag. Area
Hawthorne NV 89415
Landholding Agency: Army
Property Number: 21199013618
Status: Underutilized
Directions:
Comments:
Reasons: Within 2000 ft. of flammable or explosive material; Secured Area

Bldg. 101–7
Hawthorne Army Ammunition Plant
Group Mine Filling Plant, Central Mag. Area
Hawthorne NV 89415
Landholding Agency: Army
Property Number: 21199013619
Status: Underutilized
Directions:
Comments:
Reasons: Within 2000 ft. of flammable or explosive material; Secured Area

Bldg. 101–8
Hawthorne Army Ammunition Plant
Group Mine Filling Plant, Central Mag. Area
Hawthorne NV 89415
Landholding Agency: Army
Property Number: 21199013620
Status: Underutilized
Directions:
Comments:
Reasons: Within 2000 ft. of flammable or explosive material; Secured Area

Bldg. 101–9
Hawthorne Army Ammunition Plant
Group Mine Filling Plant, Central Mag. Area

Hawthorne NV 89415
Landholding Agency: Army
Property Number: 21199013621
Status: Underutilized
Directions:
Comments:
Reasons: Within 2000 ft. of flammable or explosive material; Secured Area

Bldg. 101–10
Hawthorne Army Ammunition Plant
Group Mine Filling Plant, Central Mag. Area
Hawthorne NV 89415
Landholding Agency: Army
Property Number: 21199013622
Status: Underutilized
Directions:
Comments:
Reasons: Secured Area; Within 2000 ft. of flammable or explosive material

Bldg. 101–17
Hawthorne Army Ammunition Plant
Group Mine Filling Plant, Central Mag. Area
Hawthorne NV 89415
Landholding Agency: Army
Property Number: 21199013623
Status: Underutilized
Directions:
Comments:
Reasons: Secured Area; Within 2000 ft. of flammable or explosive material

Bldg. 101–18
Hawthorne Army Ammunition Plant
Group Mine Filling Plant, Central Mag. Area
Hawthorne NV 89415
Landholding Agency: Army
Property Number: 21199013624
Status: Underutilized
Directions:
Comments:
Reasons: Within 2000 ft. of flammable or explosive material; Secured Area

Bldg. 101–19
Hawthorne Army Ammunition Plant
Group Mine Filling Plant, Central Mag. Area
Hawthorne NV 89415
Landholding Agency: Army
Property Number: 21199013625
Status: Underutilized
Directions:
Comments:
Reasons: Secured Area; Within 2000 ft. of flammable or explosive material

Bldg. 101–20
Hawthorne Army Ammunition Plant
Group Mine Filling Plant, Central Mag. Area
Hawthorne NV 89415
Landholding Agency: Army
Property Number: 21199013626
Status: Underutilized
Directions:
Comments:
Reasons: Secured Area; Within 2000 ft. of flammable or explosive material

Bldg. 101–31
Hawthorne Army Ammunition Plant
Group Mine Filling Plant, Central Mag. Area
Hawthorne NV 89415
Landholding Agency: Army
Property Number: 21199013627
Status: Underutilized
Directions:
Comments:
Reasons: Within 2000 ft. of flammable or explosive material; Secured Area

Bldg. 101–32
Hawthorne Army Ammunition Plant
Group Mine Filling Plant, Central Mag. Area
Hawthorne NV 89415
Landholding Agency: Army
Property Number: 21199013628
Status: Underutilized
Directions:
Comments:
Reasons: Secured Area; Within 2000 ft. of flammable or explosive material

Bldg. 101–33
Hawthorne Army Ammunition Plant
Group Mine Filling Plant, Central Mag. Area
Hawthorne NV 89415
Landholding Agency: Army
Property Number: 21199013629
Status: Underutilized
Directions:
Comments:
Reasons: Within 2000 ft. of flammable or explosive material; Secured Area

Bldg. 101–35
Hawthorne Army Ammunition Plant
Group Mine Filling Plant, Central Mag. Area
Hawthorne NV 89415
Landholding Agency: Army
Property Number: 21199013630
Status: Underutilized
Directions:
Comments:
Reasons: Within 2000 ft. of flammable or explosive material; Secured Area

Bldg. 101–36
Hawthorne Army Ammunition Plant
Group Mine Filling Plant, Central Mag. Area
Hawthorne NV 89415
Landholding Agency: Army
Property Number: 21199013631
Status: Underutilized
Directions:
Comments:
Reasons: Within 2000 ft. of flammable or explosive material; Secured Area

Bldg. 101–37
Hawthorne Army Ammunition Plant
Group Mine Filling Plant, Central Mag. Area
Hawthorne NV 89415
Landholding Agency: Army
Property Number: 21199013632
Status: Underutilized
Directions:
Comments:
Reasons: Within 2000 ft. of flammable or explosive material; Secured Area

Bldg. 101–52
Hawthorne Army Ammunition Plant
Group Mine Filling Plant, Central Mag. Area
Hawthorne NV 89415
Landholding Agency: Army
Property Number: 21199013633
Status: Underutilized
Directions:
Comments:
Reasons: Within 2000 ft. of flammable or explosive material; Secured Area

Bldg. 101–53
Hawthorne Army Ammunition Plant
Group Mine Filling Plant, Central Mag. Area
Hawthorne NV 89415
Landholding Agency: Army
Property Number: 21199013634
Status: Underutilized
Directions:
Comments:
Reasons: Secured Area; Within 2000 ft. of flammable or explosive material

Bldg. 101–54
Hawthorne Army Ammunition Plant
Group Mine Filling Plant, Central Mag. Area
Hawthorne NV 89415
Landholding Agency: Army
Property Number: 21199013635
Status: Underutilized
Directions:
Comments:
Reasons: Within 2000 ft. of flammable or explosive material; Secured Area

Bldg. 101–56
Hawthorne Army Ammunition Plant
Group Mine Filling Plant, Central Mag. Area
Hawthorne NV 89415
Landholding Agency: Army
Property Number: 21199013636
Status: Underutilized
Directions:
Comments:
Reasons: Within 2000 ft. of flammable or explosive material; Secured Area

Bldg. 101–57
Hawthorne Army Ammunition Plant
Group Mine Filling Plant, Central Mag. Area
Hawthorne NV 89415
Landholding Agency: Army
Property Number: 21199013637
Status: Underutilized
Directions:
Comments:
Reasons: Secured Area; Within 2000 ft. of flammable or explosive material

Bldg. 101–58
Hawthorne Army Ammunition Plant
Group Mine Filling Plant, Central Mag. Area
Hawthorne NV 89415
Landholding Agency: Army
Property Number: 21199013638
Status: Underutilized
Directions:
Comments:
Reasons: Secured Area; Within 2000 ft. of flammable or explosive material

Bldg. 101–59
Hawthorne Army Ammunition Plant
Group Mine Filling Plant, Central Mag. Area
Hawthorne NV 89415
Landholding Agency: Army
Property Number: 21199013639
Status: Underutilized
Directions:
Comments:
Reasons: Within 2000 ft. of flammable or explosive material; Secured Area

Bldg. 101–63
Hawthorne Army Ammunition Plant
Group Mine Filling Plant, Central Mag. Area
Hawthorne NV 89415
Landholding Agency: Army
Property Number: 21199013640
Status: Underutilized
Directions:
Comments:
Reasons: Secured Area; Within 2000 ft. of flammable or explosive material

Bldg. 101–66
Hawthorne Army Ammunition Plant
Group Mine Filling Plant, Central Mag. Area
Hawthorne NV 89415
Landholding Agency: Army
Property Number: 21199013641
Status: Underutilized
Directions:
Comments:

Reasons: Secured Area; Within 2000 ft. of flammable or explosive material

Bldg. 101–67
Hawthorne Army Ammunition Plant
Group Mine Filling Plant, Central Mag. Area
Hawthorne NV 89415
Landholding Agency: Army
Property Number: 21199013642
Status: Underutilized
Directions:
Comments:
Reasons: Within 2000 ft. of flammable or explosive material; Secured Area

Bldg. 101–69
Hawthorne Army Ammunition Plant
Group Mine Filling Plant, Central Mag. Area
Hawthorne NV 89415
Landholding Agency: Army
Property Number: 21199013643
Status: Underutilized
Directions:
Comments:
Reasons: Secured Area; Within 2000 ft. of flammable or explosive material

Group 101, 34 Bldgs.
Hawthorne Army Ammunition Plant
NV 89415–0015
Landholding Agency: Army
Property Number: 21199830132
Status: Unutilized
Directions:
Comments:
Reasons: Within 2000 ft. of flammable or explosive material; Secured Area

Bldgs. 00389, 00390
Hawthorne Army Depot
Mineral NV 89415
Landholding Agency: Army
Property Number: 21200930019
Status: Underutilized
Reasons: Secured Area

New Jersey

Bldg. No. 1354A
Armament Res. Dev. Ctr.
Picatinny Arsenal NJ 07806–5000
Landholding Agency: Army
Property Number: 21199010444
Status: Excess
Directions: Route 15 North
Comments:
Reasons: Within 2000 ft. of flammable or explosive material; Secured Area

Bldg. No. 1308
Armament Res. Dev. Ctr.
Picatinny Arsenal NJ 07806–5000
Landholding Agency: Army
Property Number: 21199010452
Status: Excess
Directions: Route 15 North
Comments:
Reasons: Secured Area; Within 2000 ft. of flammable or explosive material

Bldg. No. 1309
Armament Res. Dev. Ctr.
Picatinny Arsenal NJ 07806–5000
Landholding Agency: Army
Property Number: 21199010454
Status: Excess
Directions: Route 15 North
Comments:
Reasons: Within 2000 ft. of flammable or explosive material; Secured Area

Bldg. No. 1071G
Armament Res. Dev. Ctr.
Picatinny Arsenal NJ 07806–5000
Landholding Agency: Army
Property Number: 21199010458
Status: Excess
Directions: Route 15 North
Comments:
Reasons: Secured Area; Within 2000 ft. of flammable or explosive material

Bldg. No. 1364
Armament Res. Dev. Ctr.
Picatinny Arsenal NJ 07806–5000
Landholding Agency: Army
Property Number: 21199010464
Status: Unutilized
Directions: Route 15 North
Comments:
Reasons: Secured Area; Within 2000 ft. of flammable or explosive material

Bldg. No. 1071C
Armament Res. Dev. Ctr.
Picatinny Arsenal NJ 07806–5000
Landholding Agency: Army
Property Number: 21199010474
Status: Excess
Directions: Route 15 North
Comments:
Reasons: Within 2000 ft. of flammable or explosive material; Secured Area

Bldg. 209
Armament Research Dev. Center
Route 15 North
Picatinny Arsenal NJ 07806
Landholding Agency: Army
Property Number: 21199010639
Status: Excess
Directions:
Comments:
Reasons: Within 2000 ft. of flammable or explosive material; Secured Area

Bldg. 514
Armament Research, Dev. Center
Route 15 North
Picatinny Arsenal NJ 07806
Landholding Agency: Army
Property Number: 21199010680
Status: Unutilized
Directions:
Comments:
Reasons: Secured Area; Within 2000 ft. of flammable or explosive material

Bldg. 813–A
Armament Research, Dev. Center
Route 15 North
Picatinny Arsenal NJ 07806–5000
Landholding Agency: Army
Property Number: 21199010698
Status: Excess
Directions:
Comments:
Reasons: Within 2000 ft. of flammable or explosive material; Secured Area

Bldg. 1436
Armament Research, Dev. Center
Route 15 North
Picatinny Arsenal NJ 07806–5000
Landholding Agency: Army
Property Number: 21199010701
Status: Excess
Directions:
Comments:
Reasons: Secured Area; Within 2000 ft. of flammable or explosive material

Bldg. 1437
Armament Research, Dev. Center
Route 15 North
Picatinny Arsenal NJ 07806–5000
Landholding Agency: Army
Property Number: 21199010702
Status: Excess
Directions:
Comments:
Reasons: Within 2000 ft. of flammable or explosive material; Secured Area

Bldg. 1519
Armament Research, Dev. Center
Route 15 North
Picatinny Arsenal NJ 07806–5000
Landholding Agency: Army
Property Number: 21199010705
Status: Unutilized
Directions:
Comments:
Reasons: Within 2000 ft. of flammable or explosive material; Secured Area

Bldg. 1520
Armament Research, Dev. Center
Route 15 North
Picatinny Arsenal NJ 07806–5000
Landholding Agency: Army
Property Number: 21199010706
Status: Unutilized
Directions:
Comments:
Reasons: Within 2000 ft. of flammable or explosive material; Secured Area

Bldg. 3045
Armament Research, Dev. and Eng. Center
Route 15 North
Picatinny Arsenal NJ 07806–5000
Landholding Agency: Army
Property Number: 21199010715
Status: Unutilized
Directions:
Comments:
Reasons: Within 2000 ft. of flammable or explosive material; Secured Area

Bldg. 810A
Armament Research, Dev. Center
Route 15 North
Picatinny Arsenal NJ 07806–5000
Landholding Agency: Army
Property Number: 21199012445
Status: Excess
Directions:
Comments:
Reasons: Within 2000 ft. of flammable or explosive material; Secured Area

Bldg. 3625
Armament Res. Dev. Ctr.
Picatinny Arsenal NJ 07806–5000
Landholding Agency: Army
Property Number: 21199012448
Status: Unutilized
Directions: Route 15 North
Comments:
Reasons: Within 2000 ft. of flammable or explosive material; Secured Area

Bldg. 930
Armament Research, Dev. Center
Route 15 North
Picatinny Arsenal NJ 07806–5000
Landholding Agency: Army
Property Number: 21199012452
Status: Unutilized
Directions:
Comments:
Reasons: Within 2000 ft. of flammable or explosive material; Secured Area

Bldg. 3603
Armament Res. Dev. Ctr.

Picatinny Arsenal NJ 07806–5000
Landholding Agency: Army
Property Number: 21199012456
Status: Unutilized
Directions: Route 15 North
Comments:
Reasons: Secured Area; Within 2000 ft. of flammable or explosive material

Bldg. 911
Armament Research, Dev. Center
Route 15 North
Picatinny Arsenal NJ 07806–5000
Landholding Agency: Army
Property Number: 21199012457
Status: Unutilized
Directions:
Comments:
Reasons: Secured Area; Within 2000 ft. of flammable or explosive material

Bldg. 3617
Armament Res. Dev. Ctr.
Picatinny Arsenal NJ 07806–5000
Landholding Agency: Army
Property Number: 21199012458
Status: Unutilized
Directions: Route 15 North
Comments:
Reasons: Within 2000 ft. of flammable or explosive material; Secured Area

Bldg. 3618
Armament Res. Dev. Ctr.
Picatinny Arsenal NJ 07806–5000
Landholding Agency: Army
Property Number: 21199012461
Status: Unutilized
Directions: Route 15 North
Comments:
Reasons: Within 2000 ft. of flammable or explosive material; Secured Area

Bldg. 816A
Armament Research. Dev. Center
Route 15 North
Picatinny Arsenal NJ 07806–5000
Landholding Agency: Army
Property Number: 21199012465
Status: Excess
Directions:
Comments:
Reasons: Secured Area; Within 2000 ft. of flammable or explosive material

Bldg. 816B
Armament Research, Dev. Center
Route 15 North
Picatinny Arsenal NJ 07806–5000
Landholding Agency: Army
Property Number: 21199012469
Status: Excess
Directions:
Comments:
Reasons: Within 2000 ft. of flammable or explosive material; Secured Area

Bldg. 918
Armament Research, Dev. Center
Picatinny Arsenal NJ 07806–5000
Landholding Agency: Army
Property Number: 21199012475
Status: Unutilized
Directions: Route 15
Comments:
Reasons: Secured Area; Within 2000 ft. of flammable or explosive material

Bldg. 154
Armament Res. Development Ctr.
Route 15 North
Picatinny Arsenal NJ 07806
Landholding Agency: Army
Property Number: 21199014306
Status: Unutilized
Directions:
Comments:
Reasons: Secured Area; Within 2000 ft. of flammable or explosive material

Bldg. 3518
Armament Res. Development Ctr.
Route 15 North
Picatinny Arsenal NJ 07806
Landholding Agency: Army
Property Number: 21199014311
Status: Unutilized
Directions:
Comments:
Reasons: Within 2000 ft. of flammable or explosive material; Secured Area

Bldg. 1031
Armament Res. Development Ctr.
Route 15 North
Picatinny Arsenal NJ 07806
Landholding Agency: Army
Property Number: 21199014317
Status: Unutilized
Directions:
Comments:
Reasons: Within 2000 ft. of flammable or explosive material; Secured Area

Bldg. 291
Armament Research, Development Center
Picatinny Arsenal NJ 07806–5000
Landholding Agency: Army
Property Number: 21199420006
Status: Underutilized
Directions:
Comments:
Reasons: Extensive deterioration; Secured Area

Bldg. 164B
Armament R Engineering Ctr
Picatinny Arsenal NJ 07806–5000
Landholding Agency: Army
Property Number: 21199740113
Status: Unutilized
Directions:
Comments:
Reasons: Extensive deterioration

Bldg. 3043
Armament R Engineering Ctr
Picatinny Arsenal NJ 07806–5000
Landholding Agency: Army
Property Number: 21199740126
Status: Unutilized
Directions:
Comments:
Reasons: Extensive deterioration

Bldg. 3056
Armament R Engineering Ctr
Picatinny Arsenal NJ 07806–5000
Landholding Agency: Army
Property Number: 21199740127
Status: Unutilized
Directions:
Comments:
Reasons: Extensive deterioration

4 Bldgs.
Armament Research
#282A, 282B, 282C, 282D
Picatinny Arsenal NJ 07806–5000
Landholding Agency: Army
Property Number: 21199940096
Status: Unutilized
GSA Number:
Reasons: Other—unexploded ordnance; Extensive deterioration

Bldg. 3213
Armament Research
Picatinny Arsenal NJ 07806–5000
Landholding Agency: Army
Property Number: 21199940098
Status: Unutilized
GSA Number:
Reasons: Other—unexploded ordnance

Bldg. 1242
Armament R, D, Center
Picatinny Arsenal NJ 07806–5000
Landholding Agency: Army
Property Number: 21200130062
Status: Unutilized
GSA Number:
Reasons: Extensive deterioration

Bldg. 1381/2
Armament R, D, Center
Picatinny Arsenal NJ 07806–5000
Landholding Agency: Army
Property Number: 21200130063
Status: Unutilized
GSA Number:
Reasons: Extensive deterioration

Bldgs. 01305, 01306
Picatinny Arsenal
Dover NJ 07806–5000
Landholding Agency: Army
Property Number: 21200230074
Status: Unutilized
GSA Number:
Reasons: Secured Area; Within 2000 ft. of flammable or explosive material

Bldg. 1462A
Picatenny Arsenal
Dover NJ 07806
Landholding Agency: Army
Property Number: 21200330060
Status: Unutilized
GSA Number:
Reasons: Extensive deterioration

Bldgs. 864, 00876, 00899
Fort Monmouth
Ft. Monmouth NJ 07703
Landholding Agency: Army
Property Number: 21200430030
Status: Unutilized
Reasons: Extensive deterioration

Bldg. 00492
Fort Monmouth
Monmouth NJ 07703
Landholding Agency: Army
Property Number: 21200510025
Status: Unutilized
Reasons: Extensive deterioration

Bldg. 00908
Fort Monmouth
Monmouth NJ 07703
Landholding Agency: Army
Property Number: 21200510026
Status: Unutilized
Reasons: Extensive deterioration

Bldg. 01076
Fort Monmouth
Monmouth NJ 07703
Landholding Agency: Army
Property Number: 21200510027
Status: Unutilized
Reasons: Extensive deterioration

Bldg. 178
Picatinny Arsenal
Dover NJ 07806–5000

Landholding Agency: Army
Property Number: 21200520024
Status: Unutilized
Reasons: Secured Area; Within 2000 ft. of flammable or explosive material

4 Bldgs.
Picatinny Arsenal
230, 230A, 230B, 230G
Dover NJ 07806–5000
Landholding Agency: Army
Property Number: 21200520026
Status: Unutilized
Reasons: Secured Area; Within 2000 ft. of flammable or explosive material

Bldgs. 232, 234, 235
Picatinny Arsenal
Dover NJ 07806–5000
Landholding Agency: Army
Property Number: 21200520027
Status: Unutilized
Reasons: Within 2000 ft. of flammable or explosive material; Secured Area

4 Bldgs.
Picatinny Arsenal
408, 424, 424C, 424D
Dover NJ 07806–5000
Landholding Agency: Army
Property Number: 21200520029
Status: Unutilized
Reasons: Secured Area; Within 2000 ft. of flammable or explosive material

5 Bldgs.
Picatinny Arsenal
427, 427B, 429A, 430B, 477
Dover NJ 07806–5000
Landholding Agency: Army
Property Number: 21200520030
Status: Unutilized
Reasons: Secured Area; Within 2000 ft. of flammable or explosive material

Bldgs. 525A, 566
Picatinny Arsenal
Dover NJ 07806–5000
Landholding Agency: Army
Property Number: 21200520031
Status: Unutilized
Reasons: Secured Area; Within 2000 ft. of flammable or explosive material

Bldgs. 611C, 634, 637
Picatinny Arsenal
Dover NJ 07806–5000
Landholding Agency: Army
Property Number: 21200520032
Status: Unutilized
Reasons: Within 2000 ft. of flammable or explosive material; Secured Area

3 Bldgs.
Picatinny Arsenal
641C, 641F, 641G
Dover NJ 07806–5000
Landholding Agency: Army
Property Number: 21200520033
Status: Unutilized
Comments: 641D was demolished.
Reasons: Within 2000 ft. of flammable or explosive material; Secured Area

2 Bldgs.
Picatinny Arsenal
655, 659
Dover NJ 07806–5000
Landholding Agency: Army
Property Number: 21200520034
Status: Unutilized
Comments: 652B & 658 were demolished
Reasons: Within 2000 ft. of flammable or explosive material; Secured Area

Bldgs. 1241, 1242, 1242A
Picatinny Arsenal
Dover NJ 07806–5000
Landholding Agency: Army
Property Number: 21200520035
Status: Unutilized
Reasons: Within 2000 ft. of flammable or explosive material; Secured Area

6 Bldgs.
Picatinny Arsenal
Dover NJ 07806–5000
Landholding Agency: Army
Property Number: 21200520036
Status: Unutilized
Directions: 1354, 1357, 1357A, 1359, 1359A, 1361
Reasons: Secured Area; Within 2000 ft. of flammable or explosive material

Bldg. 1400
Picatinny Arsenal
Dover NJ 07806–5000
Landholding Agency: Army
Property Number: 21200520037
Status: Unutilized
Comments: 1510B was demolished
Reasons: Secured Area; Within 2000 ft. of flammable or explosive material

Bldg. 3612
Picatinny Arsenal
Dover NJ 07806–5000
Landholding Agency: Army
Property Number: 21200520039
Status: Unutilized
Reasons: Within 2000 ft. of flammable or explosive material; Secured Area

Bldg. 00214
Picatinny Arsenal
Dover NJ 07806
Landholding Agency: Army
Property Number: 21200530022
Status: Unutilized
Comments: 00213 was demolished
Reasons: Within 2000 ft. of flammable or explosive material; Secured Area

Bldg. 01406
Picatinny Arsenal
Dover NJ 07806
Landholding Agency: Army
Property Number: 21200530023
Status: Unutilized
Reasons: Secured Area; Within 2000 ft. of flammable or explosive material

Bldgs. 01416, 01417
Picatinny Arsenal
Dover NJ 07806
Landholding Agency: Army
Property Number: 21200530026
Status: Unutilized
Reasons: Secured Area; Within 2000 ft. of flammable or explosive material

4 Bldgs.
Picatinny Arsenal
Dover NJ 07806
Landholding Agency: Army
Property Number: 21200530028
Status: Unutilized
Directions: 03704, 03706, 03708, 03715,
Comments: 03710, 03716 were demolished
Reasons: Within 2000 ft. of flammable or explosive material; Secured Area

Bldgs. 224, 225
Picatinny Arsenal
Dover NJ 07806
Landholding Agency: Army
Property Number: 21200620017
Status: Unutilized
Comments: 221a was demolished
Reasons: Within 2000 ft. of flammable or explosive material; Secured Area

Bldgs. 230, 230f
Picatinny Arsenal
Dover NJ 07806
Landholding Agency: Army
Property Number: 21200620018
Status: Unutilized
Reasons: Within 2000 ft. of flammable or explosive material; Secured Area

Bldgs. 231, 232a, 236
Picatinny Arsenal
Dover NJ 07806
Landholding Agency: Army
Property Number: 21200620019
Status: Unutilized
Reasons: Secured Area; Within 2000 ft. of flammable or explosive material

Bldg. 252c
Picatinny Arsenal
Dover NJ 07806
Landholding Agency: Army
Property Number: 21200620020
Status: Unutilized
Reasons: Secured Area; Within 2000 ft. of flammable or explosive material

Bldg. 403
Picatinny Arsenal
Dover NJ 07806
Landholding Agency: Army
Property Number: 21200620022
Status: Unutilized
Reasons: Secured Area; Within 2000 ft. of flammable or explosive material

Bldg. 224
Picatinny Arsenal
Dover NJ 07806
Landholding Agency: Army
Property Number: 21200630001
Status: Unutilized
Comments: 221A was demolished
Reasons: Secured Area

Bldgs. 230F, 232A, 252C
Picatinny Arsenal
Dover NJ 07806
Landholding Agency: Army
Property Number: 21200630002
Status: Unutilized
Reasons: Secured Area

Bldgs. 427A, 429
Picatinny Arsenal
Dover NJ 07806
Landholding Agency: Army
Property Number: 21200630003
Status: Unutilized
Reasons: Secured Area

Bldgs. 430, 430B
Picatinny Arsenal
Dover NJ 07806
Landholding Agency: Army
Property Number: 21200630004
Status: Unutilized
Reasons: Secured Area

Bldgs. 436, 437
Picatinny Arsenal
Dover NJ 07806
Landholding Agency: Army
Property Number: 21200630005
Status: Unutilized

Reasons: Secured Area

Bldgs. 471, 471A, 471B
Picatinny Arsenal
Dover NJ 07806
Landholding Agency: Army
Property Number: 21200630006
Status: Unutilized
Reasons: Secured Area

Bldg. 477F
Picatinny Arsenal
Dover NJ 07806
Landholding Agency: Army
Property Number: 21200630007
Status: Unutilized
Comments: 477E was demolished
Reasons: Secured Area

Bldg. 636A
Picatinny Arsenal
Dover NJ 07806
Landholding Agency: Army
Property Number: 21200630008
Status: Unutilized
Reasons: Secured Area

Bldgs. 1354, 1354A
Picatinny Arsenal
Dover NJ 07806
Landholding Agency: Army
Property Number: 21200630009
Status: Unutilized
Reasons: Secured Area

Bldgs. 1357, 1357A
Picatinny Arsenal
Dover NJ 07806
Landholding Agency: Army
Property Number: 21200630010
Status: Unutilized
Reasons: Secured Area

Bldgs. 1359, 1359A
Picatinny Arsenal
Dover NJ 07806
Landholding Agency: Army
Property Number: 21200630011
Status: Unutilized
Reasons: Secured Area

3 Bldgs.
Picatinny Arsenal
Dover NJ 07806
Landholding Agency: Army
Property Number: 21200630012
Status: Unutilized
Directions: 1509, 1509A, 1510A
Comments: 1510 was demolished
Reasons: Secured Area

Bldgs. 1513, 1514, 1515
Picatinny Arsenal
Dover NJ 07806
Landholding Agency: Army
Property Number: 21200630013
Status: Unutilized
Reasons: Secured Area

Bldgs. 1517, 1518, 1529
Picatinny Arsenal
Dover NJ 07806
Landholding Agency: Army
Property Number: 21200630014
Status: Unutilized
Reasons: Secured Area

Bldg. 1609A
Picatinny Arsenal
Dover NJ 07806
Landholding Agency: Army
Property Number: 21200630015
Status: Unutilized
Reasons: Secured Area

Bldg. 3320
Picatinny Arsenal
Dover NJ 07806
Landholding Agency: Army
Property Number: 21200630016
Status: Unutilized
Reasons: Secured Area

Bldgs. 3500, 3501, 3515
Picatinny Arsenal
Dover NJ 07806
Landholding Agency: Army
Property Number: 21200630018
Status: Unutilized
Reasons: Secured Area

Bldg. 00354
Picatinny Arsenal
Morris NJ 07806
Landholding Agency: Army
Property Number: 21200720102
Status: Unutilized
Comments: 00350, 00352 were demolished
Reasons: Within 2000 ft. of flammable or explosive material; Secured Area

Bldgs. 937, 1071D
Picatinny Arsenal
Morris NJ 07806
Landholding Agency: Army
Property Number: 21200720103
Status: Unutilized
Reasons: Within 2000 ft. of flammable or explosive material; Secured Area

Bldgs. 1361, 1372
Picatinny Arsenal
Morris NJ 07806
Landholding Agency: Army
Property Number: 21200720104
Status: Unutilized
Reasons: Within 2000 ft. of flammable or explosive material; Secured Area

4 Bldgs.
Picatinny Arsenal
Dover NJ 07806
Landholding Agency: Army
Property Number: 21200820043
Status: Unutilized
Directions: 717C, 727, 916, 937
Reasons: Within 2000 ft. of flammable or explosive material; Secured Area

5 Bldgs.
Picatinny Arsenal
Dover NJ 07806
Landholding Agency: Army
Property Number: 21200820044
Status: Unutilized
Directions: 1029W, 01061, 01094, 1210S, 1212S
Reasons: Within 2000 ft. of flammable or explosive material; Secured Area

1227A
Picatinny Arsenal
Dover NJ 07806
Landholding Agency: Army
Property Number: 21200820045
Status: Unutilized
Comments: 1229A, 01510, 01602 were demolished
Reasons: Within 2000 ft. of flammable or explosive material; Secured Area

4 Bldgs.
Picatinny Arsenal
Dover NJ 07806
Landholding Agency: Army
Property Number: 21200820046
Status: Unutilized
Directions: 3533, 3608, 3611, 3616
Comments: 3236 was demolished
Reasons: Within 2000 ft. of flammable or explosive material; Secured Area

Bldg. 3716
Picatinny Arsenal
Dover NJ 07806
Landholding Agency: Army
Property Number: 21200820047
Status: Unutilized
Comments: 3715 was demolished
Reasons: Secured Area; Within 2000 ft. of flammable or explosive material

7 Bldgs.
Picatinny Arsenal
Dover NJ 07806
Landholding Agency: Army
Property Number: 21200940031
Status: Unutilized
Directions: 80, 80C, 81, 82, 83, 948, 949
Reasons: Secured Area; Within 2000 ft. of flammable or explosive material

Bldgs. 166, 167, 197
Picatinny Arsenal
Morris NJ 07806
Landholding Agency: Army
Property Number: 21201020014
Status: Unutilized
Reasons: Secured Area

9 Bldgs.
Picatinny Arsenal
Dover NJ 07806
Landholding Agency: Army
Property Number: 21201040013
Status: Unutilized
Directions: 23, 48, 49, 50, 111, 454B, 620, 620C, 641B
Reasons: Secured Area

5 Bldgs.
Piccatinny Arsenal
Dover NJ 07806
Landholding Agency: Army
Property Number: 21201040014
Status: Unutilized
Directions: 1182, 1351, 1354A, 1521, 1522
Comments: 1181 is demolished
Reasons: Secured Area

7 Bldgs.
Picatinny Arsenal
Dover NJ 07806
Landholding Agency: Army
Property Number: 21201040016
Status: Unutilized
Directions: 3604, 3605, 3606, 3609, 3613, 3615, 3627
Reasons: Secured Area

3 Bldgs.
Picatinny Arsenal
Dover NJ
Landholding Agency: Army
Property Number: 21201120007
Status: Unutilized
Directions: B00164, 1241A, X1240
Reasons: Extensive deterioration; Within airport runway clear zone Secured Area

Bldg. 0022C
Picatinny Arsenal
Dover NJ
Landholding Agency: Army
Property Number: 21201120009
Status: Unutilized
Reasons: Extensive deterioration; Secured Area

9 Bldgs.

Picatinny Arsenal
Dover NJ 07806
Landholding Agency: Army
Property Number: 21201130017
Status: Unutilized
Directions: 1241A, 0031A, 0430A, 0445F, 0507A, 0507B, 1175, 03180, 3219A
Comments: 525,1505J,1505K,3345,3354 are demolished
Reasons: Secured Area; Extensive deterioration

Bldgs. 3007 & 22C
null
Dover NJ 07806
Landholding Agency: Army
Property Number: 21201130036
Status: Unutilized
Reasons: Secured Area; Within 2000 ft. of flammable or explosive material

9 Bldgs.
Pictinny Arsenal
Dover NJ 07806
Landholding Agency: Army
Property Number: 21201140034
Status: Unutilized
Directions: 00639,00623, 00623A, 00623B, 0623C, 0623D, 0623E, 0075, 0075A
Reasons: Secured Area; Extensive deterioration

5 Bldgs.
Picatinny Arsenal
Dover NJ 07806
Landholding Agency: Army
Property Number: 21201140035
Status: Unutilized
Directions: 00281, 03013, 00332, 0623F, 0639A
Reasons: Secured Area; Contamination Extensive deterioration

New Mexico

Bldg. 10000
White Sands Missile Range
Dona Ana NM 88002
Landholding Agency: Army
Property Number: 21200410045
Status: Excess
Reasons: Secured Area

25 Bldgs.
White Sands Missile Range
Dona Ana NM 88002
Landholding Agency: Army
Property Number: 21200410046
Status: Excess
Directions: 10002–10005, 10020–10021, 10031, 10033, 10035–10036, 10070, 10073–10075, 10080–10081, 10184, 10103-10106, 10123–10126
Reasons: Secured Area

9 Bldgs.
White Sands Missile Range
Dona Ana NM 88002
Landholding Agency: Army
Property Number: 21200410047
Status: Excess
Directions: 10022–10025, 10030, 10032, 10034, 10082–10083
Reasons: Secured Area

Bldgs. 10107, 10128
White Sands Missile Range
Dona Ana NM 88002
Landholding Agency: Army
Property Number: 21200410048
Status: Excess
Reasons: Secured Area

Bldgs. 10127, 10294
White Sands Missile Range
Dona Ana NM 88002
Landholding Agency: Army
Property Number: 21200410049
Status: Excess
Reasons: Secured Area

4 Bldgs.
White Sands Missile Range
Dona Ana NM 88002
Landholding Agency: Army
Property Number: 21200440038
Status: Excess
Directions: 10230, 10231, 10232, 10233
Reasons: Extensive deterioration

Bldgs. 00122, 00160
White Sands Missile Range
Dona Ana NM 88002
Landholding Agency: Army
Property Number: 21200810024
Status: Excess
Reasons: Secured Area; Extensive deterioration

4 Bldgs.
White Sands Missile Range
Dona Ana NM 88002
Landholding Agency: Army
Property Number: 21200810025
Status: Excess
Directions: 00360, 00362, 00364, 00368
Reasons: Extensive deterioration; Secured Area

Bldg. 00421
White Sands Missile Range
Dona Ana NM 88002
Landholding Agency: Army
Property Number: 21200810026
Status: Excess
Reasons: Secured Area; Extensive deterioration

5 Bldgs.
White Sands Missile Range
Dona Ana NM 88002
Landholding Agency: Army
Property Number: 21200810027
Status: Excess
Directions: 20552, 20854, 21610, 21860, 21862
Reasons: Secured Area; Extensive deterioration

Bldgs. 23680, 24064, 26117
White Sands Missile Range
Dona Ana NM 88002
Landholding Agency: Army
Property Number: 21200810028
Status: Excess
Reasons: Secured Area; Extensive deterioration

Bldgs. 30722, 30724, 30735
White Sands Missile Range
Dona Ana NM 88002
Landholding Agency: Army
Property Number: 21200810029
Status: Excess
Reasons: Secured Area; Extensive deterioration

4 Bldgs.
White Sands Missile Range
Don Ana NM 88002
Landholding Agency: Army
Property Number: 21200820048
Status: Excess
Directions: 365, 368, 30724, 30728
Reasons: Extensive deterioration; Secured Area

Bldgs. 300, 422
White Sands Missile Range
Dona Ana NM
Landholding Agency: Army
Property Number: 21200930014
Status: Unutilized
Reasons: Secured Area

10 Bldgs.
White Sands Missile Range
Dona Ana NM 88002
Landholding Agency: Army
Property Number: 21201030016
Status: Unutilized
Directions: 302, 1513, 23653, 23638, 23673, 28281, 28282, 29362, 29364, 29365
Reasons: Extensive deterioration; Secured Area

7 Bldgs.
White Sands Missile Range
Dona Ana NM 88002
Landholding Agency: Army
Property Number: 21201040017
Status: Unutilized
Directions: 301, 384, 1529, 1650, 1735, 1798, 1825
Reasons: Secured Area; Extensive deterioration

8 Bldgs.
White Sands Missile Range
Dona Ana NM 88002
Landholding Agency: Army
Property Number: 21201040018
Status: Unutilized
Directions: 19310, 21623, 23638, 23653, 23673, 27104, 34175, FOI
Reasons: Secured Area; Extensive deterioration

White Sands Missile Range
Bldg. 21236
White Sands Missile R NM 88002
Landholding Agency: Army
Property Number: 21201110037
Status: Unutilized
Directions: Bldg. #21236
Reasons: Extensive deterioration Floodway

Bldgs. 21560 and 21562
White Sands Missile Rng.
White Sands NM 88002
Landholding Agency: Army
Property Number: 21201110059
Status: Unutilized
Reasons: Extensive deterioration

Bldg. 1752
DPW, Large Veh Mnt Yard
White Sands Missile NM 88002
Landholding Agency: Army
Property Number: 21201120100
Status: Unutilized
Reasons: Within 2000 ft. of flammable or explosive material; Secured Area; Extensive deterioration

7 Bldgs.
White Sands Missile Range
White Sands NM 88002
Landholding Agency: Army
Property Number: 21201130058
Status: Unutilized
Directions: 00357, 1752, 21236, 21560, 21562, 21925, 23000
Reasons: Extensive deterioration; Secured Area

5 Bldgs.
Main Post
White Sands Missile NM 88002

Landholding Agency: Army
Property Number: 21201140048
Status: Unutilized
Directions: 34873, 34874, 34980, 23000, UNM1
Reasons: Extensive deterioration Secured Area; Floodway

21 Bldgs.
Main Post
White Sands Missile NM 88002
Landholding Agency: Army
Property Number: 21201140049
Status: Unutilized
Directions: 1735, 1787A, 1871, 21236, 21560, 21562, 23456, 23460, 31725, 31754, 31766, 32280, 32970, 32971, 34180, 34181, 34182, 34183, 34186, 34870, 34871
Comments: Reasons for unsuitability varies
Reasons: Within 2000 ft. of flammable or explosive material; Extensive deterioration Secured Area; Floodway

Bldg. 00357
White Sands Missile Range
White Sands Missile NM 88002
Landholding Agency: Army
Property Number: 21201140059
Status: Unutilized
Reasons: Within 2000 ft. of flammable or explosive material Floodway Extensive deterioration

B–23454
White Sands Missle Range
White Sands Missle NM 88002
Landholding Agency: Army
Property Number: 21201210046
Status: Unutilized
Comments: Nat'l security concerns; no public access and no alternative method to gain access
Reasons: Secured Area

New York

Bldg. 12
Watervliet Arsenal
Watervliet NY
Landholding Agency: Army
Property Number: 21199730099
Status: Unutilized
Directions:
Comments:
Reasons: Extensive deterioration

Bldgs. B9008, B9009
Youngstown Training Site
Youngstown NY 14131
Landholding Agency: Army
Property Number: 21200220064
Status: Unutilized
GSA Number:
Reasons: Extensive deterioration

Bldgs. B9016, B9017, B9018
Youngstown Training Site
Youngstown NY 14131
Landholding Agency: Army
Property Number: 21200220065
Status: Unutilized
GSA Number:
Reasons: Extensive deterioration

Bldgs. B9025, B9026, B9027
Youngstown Training Site
Youngstown NY 14131
Landholding Agency: Army
Property Number: 21200220066
Status: Unutilized
GSA Number:
Reasons: Extensive deterioration

Bldgs. B9033, B9034
Youngstown Training Site
Youngstown NY 14131
Landholding Agency: Army
Property Number: 21200220067
Status: Unutilized
GSA Number:
Reasons: Extensive deterioration

Bldg. B9042
Youngstown Training Site
Youngstown NY 14131
Landholding Agency: Army
Property Number: 21200220068
Status: Unutilized
GSA Number:
Reasons: Extensive deterioration

Bldgs. B9050, B9051
Youngstown Training Site
Youngstown NY 14131
Landholding Agency: Army
Property Number: 21200220069
Status: Unutilized
GSA Number:
Reasons: Extensive deterioration

Bldg. 1716
U.S. Military Academy
West Point NY 10996
Landholding Agency: Army
Property Number: 21200330064
Status: Unutilized
GSA Number:
Reasons: Extensive deterioration

Bldg. 3014
West Point
Highlands NY 10996–1592
Landholding Agency: Army
Property Number: 21200410050
Status: Unutilized
Reasons: Extensive deterioration

Bldg. 108
Fredrick J ILL, Jr. USARC
Bullville NY 10915–0277
Landholding Agency: Army
Property Number: 21200510028
Status: Unutilized
Reasons: Secured Area

Bldgs. 107, 112, 113
Kerry P. Hein USARC
NY058
Shoreham NY 11778–9999
Landholding Agency: Army
Property Number: 21200510054
Status: Excess
Reasons: Secured Area

Quarters 3018
U.S. Military Academy
Highlands NY 10996–1592
Landholding Agency: Army
Property Number: 21200520040
Status: Unutilized
Reasons: Extensive deterioration

Bldgs. 21609, 22789
Fort Drum
Jefferson NY
Landholding Agency: Army
Property Number: 21200720106
Status: Unutilized
Reasons: Extensive deterioration

Bldg. 813
U.S. Army Garrison
West Point NY 10996
Landholding Agency: Army
Property Number: 21200820049
Status: Underutilized
Reasons: Secured Area

5 Bldgs.
Fort Drum
Jefferson NY 13602
Landholding Agency: Army
Property Number: 21200830060
Status: Unutilized
Directions: 01230, 01232, T2218, T2272, T2279
Reasons: Extensive deterioration

Bldgs. 0592, 2507, 2509, 21639
Fort Drum
Jefferson NY 13602
Landholding Agency: Army
Property Number: 21200840042
Status: Unutilized
Reasons: Extensive deterioration; Secured Area

Bldgs. 0134, 0136, 0139, 0142
U.S. Garrison
West Point NY 10996
Landholding Agency: Army
Property Number: 21200840043
Status: Underutilized
Reasons: Secured Area

8 Bldgs.
Fort Drum
Jefferson NY 13601
Landholding Agency: Army
Property Number: 21200920018
Status: Unutilized
Directions: T–377, T–378, T–531, T–537, T–538, T–597, T–598, T–599
Reasons: Secured Area

4 Bldgs.
Fort Drum
Jefferson NY 13601
Landholding Agency: Army
Property Number: 21200920019
Status: Unutilized
Directions: T1642, T1644, T1647, T2216
Reasons: Secured Area

9 Bldgs.
Fort Drum
Jefferson NY 13602
Landholding Agency: Army
Property Number: 21200930015
Status: Unutilized
Directions: T104, T116, 142, 143, 144, 145, 146, 147, 373
Reasons: Secured Area; Extensive deterioration

8 Bldgs.
Fort Drum
Jefferson NY 13602
Landholding Agency: Army
Property Number: 21200930017
Status: Unutilized
Directions: 2195, 2206, T2214, T2219, 2277, 2330, 2332, 2340
Reasons: Extensive deterioration; Secured Area

4 Bldgs.
Fort Drum
Jefferson NY 13602
Landholding Agency: Army
Property Number: 21200930018
Status: Unutilized
Directions: 4841, 4842, 4851, 4861
Reasons: Extensive deterioration; Secured Area

6 Bldgs.
Fort Drum
Jefferson NY 13602

Landholding Agency: Army
Property Number: 21200940010
Status: Unutilized
Directions: 1190, 1714, 10181, 10183, 10287, 11457
Reasons: Extensive deterioration

Bldgs. 214, 215, 228
Fort Hamilton
Brooklyn NY 11252
Landholding Agency: Army
Property Number: 21201010031
Status: Unutilized
Reasons: Secured Area

Bldg. 00145
U.S. Army Garrison
West Point NY 10996
Landholding Agency: Army
Property Number: 21201010032
Status: Unutilized
Reasons: Extensive deterioration

4 Bldgs.
Fort Hamilton
Brooklyn NY 11252
Landholding Agency: Army
Property Number: 21201020018
Status: Unutilized
Directions: FENCC, 214, 215, 228
Reasons: Secured Area

17 Bldgs.
null
Ft. Drum NY 13602
Landholding Agency: Army
Property Number: 21201030046
Status: Underutilized
Directions: 00036, 00044, 00045, 00046, 00055, 00060, 00064, 00065, 00068, 00069, 00070, 00072, 00073, 00074, 00075, 00078, and 00079
Reasons: Extensive deterioration

Bldg. 110
Fort Hamilton
Brooklyn NY 11252
Landholding Agency: Army
Property Number: 21201040019
Status: Underutilized
Reasons: Secured Area

Bldg. 00001
U.S. Army Garrison
West Point NY 10996
Landholding Agency: Army
Property Number: 21201040041
Status: Unutilized
Reasons: Secured Area; Extensive deterioration

14 Bldgs.
Ft. Drum
Watertown NY
Landholding Agency: Army
Property Number: 21201110054
Status: Underutilized
Directions: 0M905, 0M906, 0M907, 1O180, 1O182, 1O183, 1O184, 1O185, 1O186, 1O187, 1O188, 1O189, 1O190, 1O191
Reasons: Extensive deterioration

Bldg. 01555
Ft. Drum
Watertown NY
Landholding Agency: Army
Property Number: 21201110055
Status: Underutilized
Reasons: Within 2000 ft. of flammable or explosive material; Extensive deterioration

6 Bldgs.
Ft. Drum
Ft. Drum NY
Landholding Agency: Army
Property Number: 21201120040
Status: Underutilized
Directions: T–120, T–121, T–122, T–124, T–126, and T–127
Reasons: Extensive deterioration

Bldg. 01230
1230 Route 218/293
U.S. Army Garrsion, West Pt.
West Point NY 10996
Landholding Agency: Army
Property Number: 21201120097
Status: Underutilized
Reasons: Contamination

Bldg. 01404
West Point
West Point NY 10996
Landholding Agency: Army
Property Number: 21201130034
Status: Unutilized
Reasons: Extensive deterioration

Bldg. 00849
849 Upton Rd
West Point NY 10996
Landholding Agency: Army
Property Number: 21201130057
Status: Underutilized
Reasons: Secured Area

Bldg. 2709
Ft. Drum
Ft. Drum NY 13602
Landholding Agency: Army
Property Number: 21201140004
Status: Underutilized
Reasons: Within 2000 ft. of flammable or explosive material; Extensive deterioration

Bldgs. 02710 and 02743
Ft. Drum
Ft. Drum NY 13602
Landholding Agency: Army
Property Number: 21201140031
Status: Unutilized
Reasons: Extensive deterioration; Within 2000 ft. of flammable or explosive material

Bldg. 01404
U.S. Army Garrison
West Point NY 10996
Landholding Agency: Army
Property Number: 21201210006
Status: Unutilized
Comments: Beyond repair; no potential to meet habitation or any other use to assist the homeless
Reasons: Extensive deterioration

North Carolina

Bldg. A–1815
Fort Bragg
Ft. Bragg NC 28307
Landholding Agency: Army
Property Number: 21199640074
Status: Unutilized
Directions:
Comments:
Reasons: Extensive deterioration

4 Bldgs.
Fort Bragg
#A5230, A5231, A5232, A5233
Ft. Bragg NC 28307
Landholding Agency: Army
Property Number: 21199710107
Status: Unutilized
Directions:
Comments:
Reasons: Extensive deterioration

4 Bldgs.
Fort Bragg
#A5430, A5431, A5432, A5433
Ft. Bragg NC 28307
Landholding Agency: Army
Property Number: 21199710108
Status: Unutilized
Directions:
Comments:
Reasons: Extensive deterioration

Bldg. A5435
Fort Bragg
Ft. Bragg NC 28307
Landholding Agency: Army
Property Number: 21199710109
Status: Unutilized
Directions:
Comments:
Reasons: Extensive deterioration

4 Bldgs.
Fort Bragg
#A5628, A5630, A5631, A5632
Ft. Bragg NC 28307
Landholding Agency: Army
Property Number: 21199710110
Status: Unutilized
Directions:
Comments:
Reasons: Extensive deterioration

Bldg. M–2362, Fort Bragg
null
Ft. Bragg NC 28307
Landholding Agency: Army
Property Number: 21199710224
Status: Unutilized
Directions:
Comments:
Reasons: Extensive deterioration

Bldg. H4886
Fort Bragg
Ft. Bragg NC 28307
Landholding Agency: Army
Property Number: 21199810167
Status: Unutilized
Directions:
Comments:
Reasons: Extensive deterioration

Bldg. 05029
Fort Bragg
Ft. Bragg NC 28314
Landholding Agency: Army
Property Number: 21200410056
Status: Unutilized
Reasons: Extensive deterioration

Bldg. 09066
Fort Bragg
Ft. Bragg NC 28314
Landholding Agency: Army
Property Number: 21200430042
Status: Unutilized
Reasons: Extensive deterioration

Bldgs. 09039, Fort Bragg
Cumberland NC 28310
Landholding Agency: Army
Property Number: 21200440050
Status: Unutilized
Comments: 09134 demolished 12/7/2009
Reasons: Extensive deterioration

Bldg. P4544
Fort Bragg
Cumberland NC 28310
Landholding Agency: Army
Property Number: 21200440051

Status: Unutilized
Comments: P4443 was demolished on 9/16/2008
Reasons: Extensive deterioration

Bldgs. A5451, A5452,
Fort Bragg
Cumberland NC 28310
Landholding Agency: Army
Property Number: 21200530041
Status: Unutilized
Comments: A5454 demolished
Reasons: Extensive deterioration

Bldgs. A5646 thru A5654
Fort Bragg
Cumberland NC 28310
Landholding Agency: Army
Property Number: 21200530044
Status: Unutilized
Reasons: Extensive deterioration

Bldgs. C7646, C7845
Fort Bragg
Ft. Bragg NC 28310
Landholding Agency: Army
Property Number: 21200610020
Status: Unutilized
Reasons: Extensive deterioration

Bldgs. A3872, A3879, A3881
Fort Bragg
Ft. Bragg NC 28310
Landholding Agency: Army
Property Number: 21200620024
Status: Unutilized
Reasons: Extensive deterioration

Bldgs. A4118, A4119
Fort Bragg
Ft. Bragg NC 28310
Landholding Agency: Army
Property Number: 21200620026
Status: Unutilized
Comments: Bldg. A4318 was demo in 3/13/2008
Reasons: Extensive deterioration

Bldgs. A4681, A4683, A4684
Fort Bragg
Ft. Bragg NC 28310
Landholding Agency: Army
Property Number: 21200620029
Status: Unutilized
Reasons: Extensive deterioration

Bldgs. A4685, A4686, A4687
Fort Bragg
Ft. Bragg NC 28310
Landholding Agency: Army
Property Number: 21200620030
Status: Unutilized
Reasons: Extensive deterioration

Bldgs. A4877, A4878, A4879
Fort Bragg
Ft. Bragg NC 28310
Landholding Agency: Army
Property Number: 21200620031
Status: Unutilized
Reasons: Extensive deterioration

5 Bldgs.
Fort Bragg
Ft. Bragg NC 28310
Landholding Agency: Army
Property Number: 21200620032
Status: Unutilized
Directions: A4883, A4884, A4885, A4886, A4887
Reasons: Extensive deterioration

Bldgs. M6750, M6751,
Fort Bragg
Ft. Bragg NC 28310
Landholding Agency: Army
Property Number: 21200620034
Status: Unutilized
Comments: M6753 was demolished on 03/13/2008
Reasons: Extensive deterioration

Bldgs. 81703, 82105, 82313
Fort Bragg
Ft. Bragg NC 28310
Landholding Agency: Army
Property Number: 21200620039
Status: Unutilized
Reasons: Extensive deterioration

4 Bldgs.
Fort Bragg
Ft. Bragg NC 28310
Landholding Agency: Army
Property Number: 21200630029
Status: Unutilized
Directions: A2003, A2205, A2207, A2302
Reasons: Extensive deterioration

Bldg. T2758
Fort Bragg
Ft. Bragg NC 28310
Landholding Agency: Army
Property Number: 21200630031
Status: Unutilized
Reasons: Extensive deterioration

Bldg. A2808
Fort Bragg
Ft. Bragg NC 28310
Landholding Agency: Army
Property Number: 21200630032
Status: Unutilized
Reasons: Extensive deterioration

Bldgs. T2857, T2858, T2954
Fort Bragg
Ft. Bragg NC 28310
Landholding Agency: Army
Property Number: 21200630034
Status: Unutilized
Reasons: Extensive deterioration

Bldgs. T3364, T3502, T3503
Fort Bragg
Ft. Bragg NC 28310
Landholding Agency: Army
Property Number: 21200630040
Status: Unutilized
Reasons: Extensive deterioration

Bldgs. D3548, D3555
Fort Bragg
Ft. Bragg NC 28310
Landholding Agency: Army
Property Number: 21200630041
Status: Unutilized
Reasons: Extensive deterioration

4 Bldgs.
Fort Bragg
Ft. Bragg NC 28310
Landholding Agency: Army
Property Number: 21200630043
Status: Unutilized
Directions: A3703, A3872, A3879, A3881
Reasons: Extensive deterioration

Bldgs. A4118, A4119, A4318
Fort Bragg
Ft. Bragg NC 28310
Landholding Agency: Army
Property Number: 21200630046
Status: Unutilized
Reasons: Extensive deterioration

5 Bldgs.
Fort Bragg
Ft. Bragg NC 28310
Landholding Agency: Army
Property Number: 21200630047
Status: Unutilized
Directions: A4620, A4622, A4623, A4626, A4628
Reasons: Extensive deterioration

Bldgs. A4635, A4636
Fort Bragg
Ft. Bragg NC 28310
Landholding Agency: Army
Property Number: 21200630048
Status: Unutilized
Reasons: Extensive deterioration

Bldgs. M7240, M7243, M7248
Fort Bragg
Ft. Bragg NC 28310
Landholding Agency: Army
Property Number: 21200640059
Status: Unutilized
Reasons: Extensive deterioration

Bldgs. 41443, 41443, 41444
Fort Brag
Ft. Bragg NC 28310
Landholding Agency: Army
Property Number: 21200640114
Status: Unutilized
Reasons: Extensive deterioration

Bldg. 02723
Fort Bragg
Ft. Bragg NC 28310
Landholding Agency: Army
Property Number: 21200720029
Status: Unutilized
Reasons: Extensive deterioration

Bldg. 9656
Fort Bragg
Ft. Bragg NC 28310
Landholding Agency: Army
Property Number: 21200720032
Status: Unutilized
Reasons: Extensive deterioration

2 Bldgs.
Fort Bragg
42145, 42245
Ft. Bragg NC 28310
Landholding Agency: Army
Property Number: 21200720033
Status: Unutilized
Comments: 42848, 42948 demloished 5/5/2012
Reasons: Extensive deterioration

Bldg. P3839
Fort Bragg
Cumberland NC 28310
Landholding Agency: Army
Property Number: 21200740020
Status: Unutilized
Reasons: Extensive deterioration; Secured Area

2 Bldgs.
Fort Bragg
Ft. Bragg NC 28310
Landholding Agency: Army
Property Number: 21200740154
Status: Unutilized
Directions: 2847 and 3236
Reasons: Within 2000 ft. of flammable or explosive material; Secured Area; Extensive deterioration

6 Bldgs.
Fort Bragg
Ft. Bragg NC 28310
Landholding Agency: Army

Property Number: 21200740155
Status: Unutilized
Directions: 3241, 3245, 3249, 3253, 3258, 3262
Reasons: Within 2000 ft. of flammable or explosive material; Secured Area; Extensive deterioration

8 Bldgs.
Fort Bragg
Ft. Bragg NC 28310
Landholding Agency: Army
Property Number: 21200740156
Status: Unutilized
Directions: 4143, 4147, 4152, 4156, 4160, 4164, 4169, 4774
Reasons: Within 2000 ft. of flammable or explosive material; Secured Area; Extensive deterioration

5 Bldgs.
Fort Bragg
Ft. Bragg NC 28310
Landholding Agency: Army
Property Number: 21200740157
Status: Unutilized
Directions: 5024, 5028, 5032, 5034, 5071
Reasons: Within 2000 ft. of flammable or explosive material; Secured Area; Extensive deterioration

8 Bldgs.
Fort Bragg
Ft. Bragg NC 28310
Landholding Agency: Army
Property Number: 21200740158
Status: Unutilized
Directions: 5182, 5381, 5473, 5645, 5779, 5849, 5878, 5880
Reasons: Secured Area; Extensive deterioration; Within 2000 ft. of flammable or explosive material

5 Bldgs.
Fort Bragg
Cumberland NC 28310
Landholding Agency: Army
Property Number: 21200820056
Status: Unutilized
Directions: C8145, C8246, C8344, C8442, C8448
Reasons: Extensive deterioration; Secured Area

6 Bldgs.
Fort Bragg
Cumberland NC 28310
Landholding Agency: Army
Property Number: 21200820057
Status: Unutilized
Directions: C8541, C8548, C8640, C8750, C8948, C9349
Reasons: Extensive deterioration; Secured Area

7 Bldgs.
Fort Bragg
Cumberland NC 28310
Landholding Agency: Army
Property Number: 21200830018
Status: Unutilized
Directions: 21414, 21559, 21755, 21757, 21859, 21862, 21957
Reasons: Secured Area

Bldgs. 31602, 31603, 31604
Fort Bragg
Cumberland NC 28310
Landholding Agency: Army
Property Number: 21200830019
Status: Unutilized
Reasons: Secured Area

Bldg. 55047
Fort Bragg
Cumberland NC 28310
Landholding Agency: Army
Property Number: 21200830021
Status: Unutilized
Comments: 55353 and 55250 was demolished
Reasons: Secured Area

4 Bldgs.
Fort Bragg
Cumberland NC 28310
Landholding Agency: Army
Property Number: 21200830022
Status: Unutilized
Directions: 83015, 83019, 83201, 83502
Comments: 82807, 82809 were demolished
Reasons: Secured Area

M4020
Fort Bragg
Cumberland NC 28310
Landholding Agency: Army
Property Number: 21200830023
Status: Unutilized
Comments: M5865, M5868, C4614 were demolished
Reasons: Secured Area

4 Bldgs.
Fort Bragg
Cumberland NC 28310
Landholding Agency: Army
Property Number: 21200840045
Status: Unutilized
Directions: 22053, 22055, 22059, 82714
Reasons: Secured Area; Extensive deterioration

6 Bldgs.
Fort Bragg
Cumberland NC 28310
Landholding Agency: Army
Property Number: 21200920049
Status: Unutilized
Directions: A1355, A2029, A2031, A2032, A2144, P2352
Reasons: Secured Area; Extensive deterioration

8 Bldgs.
Fort Bragg
Cumberland NC 28310
Landholding Agency: Army
Property Number: 21200920050
Status: Unutilized
Directions: C4125, 09045, 11460, 22809, 23212, 23810, 30844, 55010
Reasons: Secured Area; Extensive deterioration

5 Bldgs.
Simmons Army Airfield
Cumberland NC 28310
Landholding Agency: Army
Property Number: 21200920053
Status: Unutilized
Directions: P2455, P2457, P2542, P2757, P2852
Reasons: Extensive deterioration; Secured Area

Bldg. T3361
Fort Bragg
Camp Mackall NC 28373
Landholding Agency: Army
Property Number: 21200940033
Status: Unutilized
Comments: T3354 demolished
Reasons: Extensive deterioration; Secured Area

12 Bldgs.
Fort Bragg
Ft. Bragg NC 28310
Landholding Agency: Army
Property Number: 21201020019
Status: Unutilized
Directions: 661A, M2146, C2629, F2630, A3527, C3609, A3726, A3728, C3731, A3732, A3734, A3736
Reasons: Secured Area

8 Bldgs.
Fort Bragg
Ft. Bragg NC 28310
Landholding Agency: Army
Property Number: 21201020021
Status: Unutilized
Directions: A6133, C7017, C7018, C7116, C7118, C7549, C7842, C7943
Comments: C7444, C7342, C7244, was demolished
Reasons: Secured Area; Extensive deterioration

3 Bldgs.
Fort Bragg
Cumberland NC 28310
Landholding Agency: Army
Property Number: 21201030017
Status: Unutilized
Directions: 31743, M5044, M5040
Comments: T2139 demolished
Reasons: Secured Area; Extensive deterioration

Bldg. 83022
Fort Bragg
Cumberland NC 28310
Landholding Agency: Army
Property Number: 21201040020
Status: Unutilized
Reasons: Secured Area; Extensive deterioration

4 Bldgs.
Ft. Bragg
Ft. Bragg NC 28310
Landholding Agency: Army
Property Number: 21201110031
Status: Unutilized
Directions: X5062, X5066, X6260, X6266
Reasons: Extensive deterioration; Secured Area

5 Bldgs.
null
Ft. Bragg NC 28310
Landholding Agency: Army
Property Number: 21201110032
Status: Unutilized
Directions: X5041, X5045, X5049, X5053, X5058
Reasons: Extensive deterioration; Secured Area

5 Bldgs.
null
Ft. Bragg NC
Landholding Agency: Army
Property Number: 21201110033
Status: Unutilized
Directions: X4134, X4137, X4139, X4141, X5036
Reasons: Extensive deterioration; Secured Area

5 Bldgs.
null
Ft. Bragg NC 28310
Landholding Agency: Army
Property Number: 21201110034
Status: Unutilized

Directions: N3305, X3266, X3770, X4126, X4130
Reasons: Extensive deterioration; Secured Area

5 Bldgs.
Ft. Bragg
Ft. Bragg NC 28310
Landholding Agency: Army
Property Number: 21201110050
Status: Unutilized
Directions: 42273, H1617, H1713, H1715, H2614
Reasons: Secured Area; Extensive deterioration

2 Bldgs.
Ft. Bragg
Ft. Bragg NC
Landholding Agency: Army
Property Number: 21201120021
Status: Underutilized
Directions: N5505, 15905
Comments: T3352 demolished 6/20/2011
Reasons: Extensive deterioration

4 Bldgs.
null
Fort Bragg NC 28310
Landholding Agency: Army
Property Number: 21201130001
Status: Unutilized
Directions: A5586, A5587, A5783, A5787
Reasons: Extensive deterioration; Secured Area

10 Bldgs.
null
Fort Bragg NC 28310
Landholding Agency: Army
Property Number: 21201130002
Status: Unutilized
Directions: A5287, A5377, A5378, A5380, A5381, A5383, A5385, A5386, A5387, A5583
Reasons: Extensive deterioration; Secured Area

10 bldgs.
null
Fort Bragg NC 28310
Landholding Agency: Army
Property Number: 21201130003
Status: Unutilized
Directions: A5078, A5080, A5083, A5084, A5085, A5087, A5277, A5280, A5283, A5284
Reasons: Secured Area; Extensive deterioration

Bldg. 31802
null
Fort Bragg NC 28310
Landholding Agency: Army
Property Number: 21201130004
Status: Unutilized
Reasons: Secured Area; Extensive deterioration

Bldg. 1537
null
Fort Bragg NC 28310
Landholding Agency: Army
Property Number: 21201130005
Status: Unutilized
Reasons: Extensive deterioration

12 Bldgs.
null
Fort Bragg NC 28310
Landholding Agency: Army
Property Number: 21201130007
Status: Unutilized
Directions: V3408, V3509, V3510, V3610, V3611, V3712, V3810, V3911, X6037, X6088, X6252, A5077
Reasons: Extensive deterioration; Secured Area

14 Bldgs.
Pope Army Field
Fort Bragg NC 28308
Landholding Agency: Army
Property Number: 21201130010
Status: Unutilized
Directions: 610, 614, 617, 618, 619, 623, 625, 15905, C7620, M6446, V3111, V3308, V3310, V3312
Reasons: Extensive deterioration; Secured Area

10 Bldgs.
Ft. Bragg
Ft. Bragg NC 28310
Landholding Agency: Army
Property Number: 21201140009
Status: Unutilized
Directions: 32039, K1846, K2106, X7163, X7169, X7269, X7362, X7369, X7462, X7665
Reasons: Secured Area; Extensive deterioration

Bldg. 22017 and 91765
Fort Bragg
Fort Bragg NC 28310
Landholding Agency: Army
Property Number: 21201210061
Status: Unutilized
Comments: Nat'l security concerns; restricted access and no alternative method of access
Reasons: Secured Area

17 Bldgs.
Fort Bragg
Fort Bragg NC 28310
Landholding Agency: Army
Property Number: 21201210062
Status: Unutilized
Directions: A5620, A5622, A5623, A5626, A5627, A5633, A5635, A5636, A5720, A5721, A5722, A5723, A5724, A5725, A5726, A5727, A5728
Comments: Nat'l security concerns; restricted access and no alternative method of access
Reasons: Secured Area

14 Bldgs.
Fort Bragg
Fort Bragg NC 28310
Landholding Agency: Army
Property Number: 21201210063
Status: Unutilized
Directions: A5730, A5731, A5732, A5733, A5735, A5957, D1705, D2004, D2007, D2105, M2362, M2643, M2645, V3312
Comments: Nat'l security concerns; restricted access; and no alternative method of access; Bldgs. A5256, A5257, A5656 are still in use
Reasons: Secured Area

B–H1607
Ft. Bragg
Ft. Bragg NC 28310
Landholding Agency: Army
Property Number: 21201210094
Status: Unutilized
Comments: nat'l security concerns; no public access; restricted area; no alternative method to gain access
Reasons: Secured Area

4 Buildings
Ft. Bragg
Ft. Bragg NC 28308
Landholding Agency: Army
Property Number: 21201230004
Status: Unutilized
Directions: 276, 31335, C1624, D1910
Comments: restricted access to authorized military personnel only; public access denied & no alternative method to gain access w/out comprising nat'l security
Reasons: Secured Area

North Dakota

Bldg. 440
Stanley R. Mickelsen
Nekoma ND 58355
Landholding Agency: Army
Property Number: 21199940103
Status: Unutilized
GSA Number:
Reasons: Extensive deterioration

Bldg. 455
Stanley R. Mickelsen
Nekoma ND 58355
Landholding Agency: Army
Property Number: 21199940104
Status: Unutilized
GSA Number:
Reasons: Extensive deterioration

Bldg. 456
Stanley R. Mickelsen
Nekoma ND 58355
Landholding Agency: Army
Property Number: 21199940105
Status: Unutilized
GSA Number:
Reasons: Extensive deterioration

Bldg. 3101
Stanley R. Mickelsen
Langdon ND 58355
Landholding Agency: Army
Property Number: 21199940106
Status: Unutilized
GSA Number:
Reasons: Extensive deterioration

Bldg. 3110
Stanley R. Mickelsen
Langdon ND 58355
Landholding Agency: Army
Property Number: 21199940107
Status: Unutilized
GSA Number:
Reasons: Extensive deterioration

Ohio

Bldg. S0390
Lima Army Tank Plant
Lima OH 45804–1898
Landholding Agency: Army
Property Number: 21199730104
Status: Unutilized
Directions:
Comments:
Reasons: Secured Area

Bldg. T0441
Lima Army Tank Plant
Lima OH 45804–1898
Landholding Agency: Army
Property Number: 21199730105
Status: Unutilized
Directions:
Comments:
Reasons: Secured Area

Bldg. 00442
Lima Army Tank Plant

Lima OH 45804–1898
Landholding Agency: Army
Property Number: 21199730106
Status: Unutilized
Directions:
Comments:
Reasons: Secured Area

Bldg. 00443
Lima Army Tank Plant
Lima OH 45804–1898
Landholding Agency: Army
Property Number: 21199730107
Status: Unutilized
Directions:
Comments:
Reasons: Secured Area

Bldg. 00452
Lima Army Tank Plant
Lima OH 45804–1898
Landholding Agency: Army
Property Number: 21199730108
Status: Unutilized
Directions:
Comments:
Reasons: Secured Area; Extensive deterioration

Bldg. 00693
Lima Army Tank Plant
Lima OH 45804–1898
Landholding Agency: Army
Property Number: 21199730109
Status: Unutilized
Directions:
Comments:
Reasons: Secured Area

Bldg. TO707
Lima Army Tank Plant
Lima OH 45804–1898
Landholding Agency: Army
Property Number: 21199730110
Status: Unutilized
Directions:
Comments:
Reasons: Secured Area

Bldg. S3403
Ravenna Army Ammunition Plant OH 44266–9297
Landholding Agency: Army
Property Number: 21199840069
Status: Unutilized
Directions:
Comments:
Reasons: Within 2000 ft. of flammable or explosive material; Secured Area

Bldg. S3410
Ravenna Army Ammunition Plant OH 44266–9297
Landholding Agency: Army
Property Number: 21199840070
Status: Unutilized
Directions:
Comments:
Reasons: Secured Area; Within 2000 ft. of flammable or explosive material

Bldg. S4452
Ravenna Army Ammunition Plant OH 44266–9297
Landholding Agency: Army
Property Number: 21199840071
Status: Unutilized
Directions:
Comments:
Reasons: Within 2000 ft. of flammable or explosive material; Secured Area

Bldg. FJ904
Ravenna Army Ammunition Plant OH 44266–9297
Landholding Agency: Army
Property Number: 21199840072
Status: Unutilized
Directions:
Comments:
Reasons: Secured Area; Within 2000 ft. of flammable or explosive material

Bldg. S4513
Ravenna Army Ammunition Plant OH 44266–9297
Landholding Agency: Army
Property Number: 21199840073
Status: Unutilized
Directions:
Comments:
Reasons: Secured Area; Within 2000 ft. of flammable or explosive material

Bldg. IWT01
Ravenna Army Ammunition Plant OH 44266–9297
Landholding Agency: Army
Property Number: 21199840074
Status: Unutilized
Directions:
Comments:
Reasons: Secured Area; Within 2000 ft. of flammable or explosive material

Bldgs. DC001, DB27B
Ravenna Army Ammunition Plant OH 44266–9297
Landholding Agency: Army
Property Number: 21199840075
Status: Unutilized
Directions:
Comments:
Reasons: Secured Area; Within 2000 ft. of flammable or explosive material

Bldg. 0251A
Ravenna Army Ammunition Plant OH 44266–9297
Landholding Agency: Army
Property Number: 21199840076
Status: Unutilized
Directions:
Comments:
Reasons: Within 2000 ft. of flammable or explosive material; Secured Area

Bldgs. DB008, DB08A, DB022
Ravenna Army Ammunition Plant OH 44266–9297
Landholding Agency: Army
Property Number: 21199840077
Status: Unutilized
Directions:
Comments:
Reasons: Within 2000 ft. of flammable or explosive material; Secured Area

Bldg. DB002
Ravenna Army Ammunition Plant OH 44266–9297
Landholding Agency: Army
Property Number: 21199840078
Status: Unutilized
Directions:
Comments:
Reasons: Secured Area; Within 2000 ft. of flammable or explosive material

Bldg. DB019
Ravenna Army Ammunition Plant OH 44266–9297
Landholding Agency: Army
Property Number: 21199840079
Status: Unutilized
Directions:
Comments:
Reasons: Within 2000 ft. of flammable or explosive material; Secured Area

Bldg. 00251
Ravenna Army Ammunition Plant OH 44266–9297
Landholding Agency: Army
Property Number: 21199840080
Status: Unutilized
Directions:
Comments:
Reasons: Secured Area; Within 2000 ft. of flammable or explosive material

6 Bldgs.
Ravenna Army Ammunition Plant OH 44266–9297
Landholding Agency: Army
Property Number: 21199840081
Status: Unutilized
Directions: #DA005, DA007, DB009, DB09A, DB011, DA021
Comments:
Reasons: Secured Area; Within 2000 ft. of flammable or explosive material

29 Bldgs.
Ravenna Army Ammunition Plant OH 44266–9297
Landholding Agency: Army
Property Number: 21199840082
Status: Unutilized
Directions: #DB003, DB004, DB04A/N/S, DB04V, DB4AN, DB4AS, 22635, DB4AV, DA006, DA06A, DB010, DB10B, DB10C, DB013, DB13A/B, DB020, DB025–27, DB27A/C, DA028/28A, DB029–DB030, DB802,
Comments:
Reasons: Within 2000 ft. of flammable or explosive material; Secured Area

24 Bldgs.
Ravenna Army Ammunition Plant OH 44266–9297
Landholding Agency: Army
Property Number: 21199840083
Status: Unutilized
Directions: #EB003, EB004, EB04A/N/S, EB04V, EB4AN, EB4AS, EB4AV, EA006, EA06A, EB010, EB10A/B/C, EB013, EB13A/B, EB020, EB025, EB026, EA028, EA28A, EB803
Comments:
Reasons: Secured Area; Within 2000 ft. of flammable or explosive material

Bldg. 00351
Ravenna Army Ammunition Plant OH 44266–9297
Landholding Agency: Army
Property Number: 21199840084
Status: Unutilized
Directions:
Comments:
Reasons: Within 2000 ft. of flammable or explosive material; Secured Area

Bldg. 00351A
Ravenna Army Ammunition Plant OH 44266–9297
Landholding Agency: Army
Property Number: 21199840085
Status: Unutilized
Directions:
Comments:
Reasons: Within 2000 ft. of flammable or explosive material; Secured Area

Bldg. EB019

Ravenna Army Ammunition Plant OH 44266–9297
Landholding Agency: Army
Property Number: 21199840086
Status: Unutilized
Directions:
Comments:
Reasons: Secured Area; Within 2000 ft. of flammable or explosive material

Bldg. EB002
Ravenna Army Ammunition Plant OH 44266–9297
Landholding Agency: Army
Property Number: 21199840087
Status: Unutilized
Directions:
Comments:
Reasons: Within 2000 ft. of flammable or explosive material; Secured Area

Bldgs. EB008, EB08A, EB022
Ravenna Army Ammunition Plant OH 44266–9297
Landholding Agency: Army
Property Number: 21199840088
Status: Unutilized
Directions:
Comments:
Reasons: Secured Area; Within 2000 ft. of flammable or explosive material

6 Bldgs.
Ravenna Army Ammunition Plant OH 44266–9297
Landholding Agency: Army
Property Number: 21199840089
Status: Unutilized
Directions: #EA005, EA007, EB009, EB09A, EB011, EA021
Comments:
Reasons: Secured Area; Within 2000 ft. of flammable or explosive material

4 Bldgs.
Ravenna Army Ammunition Plant OH 44266–9297
Landholding Agency: Army
Property Number: 21199840090
Status: Unutilized
Directions: #S5701, S3201, S3001, S4101
Comments:
Reasons: Within 2000 ft. of flammable or explosive material; Secured Area

Bldgs. S4301, S5301
Ravenna Army Ammunition Plant OH 44266–9297
Landholding Agency: Army
Property Number: 21199840091
Status: Unutilized
Directions:
Comments:
Reasons: Secured Area; Within 2000 ft. of flammable or explosive material

26 Bldgs.
Ravenna Army Ammunition Plant OH 44266–9297
Landholding Agency: Army
Property Number: 21199840093
Status: Unutilized
Directions: #CB025, CB13B/A, CB013, CB10D/C/B, CB010, CB04V, CB04S, CB4AV, CB04N/B/A, CB004, CB4AS, CB4AN, CB002, CB003, CA28A, CA014, CA06A, CA006, CA06V, CA6AV, 22640
Comments:
Reasons: Within 2000 ft. of flammable or explosive material; Secured Area

Bldg. F0015
Ravenna Army Ammunition Plant OH 44266–9297
Landholding Agency: Army
Property Number: 21199840094
Status: Unutilized
Directions:
Comments:
Reasons: Secured Area; Within 2000 ft. of flammable or explosive material

Bldg. 1032
Ravenna Army Ammunition Plant OH 44266–9297
Landholding Agency: Army
Property Number: 21199840095
Status: Unutilized
Directions:
Comments:
Reasons: Within 2000 ft. of flammable or explosive material; Secured Area

5 Bldgs.
Ravenna Army Ammunition Plant OH 44266–9297
Landholding Agency: Army
Property Number: 21199840096
Status: Unutilized
Directions: #CB008, CB023, CB012, CB022, CA015
Comments:
Reasons: Secured Area; Within 2000 ft. of flammable or explosive material

Bldgs. CB026, CB801, CB020
Ravenna Army Ammunition Plant OH 44266–9297
Landholding Agency: Army
Property Number: 21199840097
Status: Unutilized
Directions:
Comments:
Reasons: Within 2000 ft. of flammable or explosive material; Secured Area

Bldgs. S4801, CC001
Ravenna Army Ammunition Plant OH 44266–9297
Landholding Agency: Army
Property Number: 21199840098
Status: Unutilized
Directions:
Comments:
Reasons: Within 2000 ft. of flammable or explosive material; Secured Area

Bldgs. 0151A, 00151
Ravenna Army Ammunition Plant OH 44266–9297
Landholding Agency: Army
Property Number: 21199840099
Status: Unutilized
Directions:
Comments:
Reasons: Secured Area; Within 2000 ft. of flammable or explosive material

Bldg. CB19
Ravenna Army Ammunition Plant OH 44266–9297
Landholding Agency: Army
Property Number: 21199840100
Status: Unutilized
Directions:
Comments:
Reasons: Within 2000 ft. of flammable or explosive material; Secured Area

8 Bldgs.
Ravenna Army Ammunition Plant OH 44266–9297
Landholding Agency: Army
Property Number: 21199840101
Status: Unutilized
Directions: #CA007, CA005, CA017, CA028, CB009, CA021, CB011, CB016
Comments:
Reasons: Secured Area; Within 2000 ft. of flammable or explosive material

Bldg. SD002
Ravenna Army Ammunition Plant OH 44266–9297
Landholding Agency: Army
Property Number: 21199840102
Status: Unutilized
Directions:
Comments:
Reasons: Secured Area; Within 2000 ft. of flammable or explosive material

Bldg. WW001
Ravenna Army Ammunition Plant OH 44266–9297
Landholding Agency: Army
Property Number: 21199840104
Status: Unutilized
Directions:
Comments:
Reasons: Within 2000 ft. of flammable or explosive material; Secured Area

32 Bldgs.
Ravenna Army Ammunition Plant OH 44266–9297
Landholding Agency: Army
Property Number: 21200240064
Status: Excess
GSA Number:
Directions: PE001–PE031; Load—Line 10
Reasons: Extensive deterioration; Within 2000 ft. of flammable or explosive material; Within airport runway clear zone; Secured Area

Bldg. 1039
Ravenna Army Ammo Plant
Ravenna OH 44266–9297
Landholding Agency: Army
Property Number: 21200420131
Status: Excess
Reasons: Extensive deterioration; Secured Area; Within 2000 ft. of flammable or explosive material

Bldgs. 1200, T4602, T4605
Ravenna Army Ammo Plant
Ravenna OH 44266–9297
Landholding Agency: Army
Property Number: 21200420132
Status: Excess
Reasons: Extensive deterioration; Secured Area; Within 2000 ft. of flammable or explosive material

Bldgs. 1601, 1603
Ravenna Army Ammo Plant
Portage OH 44266
Landholding Agency: Army
Property Number: 21200530051
Status: Excess
Reasons: Within 2000 ft. of flammable or explosive material; Secured Area

Bldgs. T3404, T4301, 1604
Ravenna Army Ammo Plant
Portage OH 44266
Landholding Agency: Army
Property Number: 21200530052
Status: Excess
Reasons: Secured Area; Within 2000 ft. of flammable or explosive material

Bldg. 201
Defense Supply Center

Columbus OH 43218
Landholding Agency: Army
Property Number: 21200640061
Status: Unutilized
Reasons: Secured Area

Bldg. 300
Defense Supply Center
Columbus OH 43218
Landholding Agency: Army
Property Number: 21200820072
Status: Unutilized
Reasons: Secured Area

Bldg. 27 (1–7)
Defense Supply Center
Columbus OH 43216
Landholding Agency: Army
Property Number: 21200920059
Status: Unutilized
Reasons: Secured Area; Extensive deterioration

Bldg. 00331
Defense Supply Center
Columbus OH 43218
Landholding Agency: Army
Property Number: 21201210004
Status: Underutilized
Comments: National security concerns
Reasons: Secured Area

Bldg. 00048
Defense Supply Center
Columbus OH 43218
Landholding Agency: Army
Property Number: 21201210005
Status: Underutilized
Comments: National security concerns
Reasons: Secured Area

Oklahoma

Bldg. M–1441
Fort Sill
Lawton OK 73501–5100
Landholding Agency: Army
Property Number: 21199510023
Status: Unutilized
Directions:
Comments:
Reasons: Extensive deterioration

Bldg. 00445
Fort Sill
Lawton OK 73501
Landholding Agency: Army
Property Number: 21200330065
Status: Unutilized
GSA Number:
Reasons: Extensive deterioration

Bldg. 01193
Fort Sill
Lawton OK 73501–5100
Landholding Agency: Army
Property Number: 21200430043
Status: Unutilized
Reasons: Extensive deterioration

Bldgs. MA050, MA070
Regional Training Institute
Oklahoma City OK 73111
Landholding Agency: Army
Property Number: 21200440052
Status: Unutilized
Reasons: Extensive deterioration

Bldg. GRM03
Camp Gruber Training Site
Braggs OK 74423
Landholding Agency: Army
Property Number: 21200510029
Status: Unutilized
Reasons: Extensive deterioration

Bldg. GRM24
Camp Gruber Training Site
Braggs OK 74423
Landholding Agency: Army
Property Number: 21200510030
Status: Unutilized
Reasons: Extensive deterioration

Bldg. GRM26
Camp Gruber Training Site
Braggs OK 74423
Landholding Agency: Army
Property Number: 21200510031
Status: Unutilized
Reasons: Extensive deterioration

Bldg. GRM34
Camp Gruber Training Site
Braggs OK 74423
Landholding Agency: Army
Property Number: 21200510032
Status: Unutilized
Reasons: Extensive deterioration

Bldgs. 1500, 1515, 1539
Fort Sill
Lawton OK 73503
Landholding Agency: Army
Property Number: 21200530053
Status: Unutilized
Reasons: Within 2000 ft. of flammable or explosive material

Bldg. 2185
Fort Sill
Lawton OK 73503
Landholding Agency: Army
Property Number: 21200530054
Status: Unutilized
Reasons: Within 2000 ft. of flammable or explosive material

Bldgs. 2306, 2332
Fort Sill
Lawton OK 73503
Landholding Agency: Army
Property Number: 21200530055
Status: Unutilized
Reasons: Within 2000 ft. of flammable or explosive material

6 Bldgs.
Fort Sill
Lawton OK 73503
Landholding Agency: Army
Property Number: 21200530056
Status: Unutilized
Directions: 2452, 2458, 2464, 2473, 2485, 2491
Reasons: Within 2000 ft. of flammable or explosive material

Bldgs. 2523, 2932, 2962
Fort Sill
Lawton OK 73503
Landholding Agency: Army
Property Number: 21200530057
Status: Unutilized
Reasons: Within 2000 ft. of flammable or explosive material

Bldg. 3359
Fort Sill
Lawton OK 73503
Landholding Agency: Army
Property Number: 21200530058
Status: Unutilized
Reasons: Within 2000 ft. of flammable or explosive material

4 Bldgs.
Fort Sill
3455, 3461, 3475, 3491
Lawton OK 73503
Landholding Agency: Army
Property Number: 21200530059
Status: Unutilized
Reasons: Within 2000 ft. of flammable or explosive material

Bldgs. 5150, 6101, 6111
Fort Sill
Lawton OK 73503
Landholding Agency: Army
Property Number: 21200530060
Status: Unutilized
Reasons: Within 2000 ft. of flammable or explosive material

4 Bldgs.
Fort Sill
Lawton OK 73501
Landholding Agency: Army
Property Number: 21200840047
Status: Unutilized
Directions: M5680, M5681, M5682, M5683
Reasons: Extensive deterioration

Bldgs. M3805, M4905
Fort Sill
Lawton OK 73501
Landholding Agency: Army
Property Number: 21201010035
Status: Unutilized
Reasons: Extensive deterioration

RS Kerr Lake
HC61
Sallisaw OK 74955
Landholding Agency: Army
Property Number: 21201040042
Status: Underutilized
Reasons: Extensive deterioration

Fort Sill, (4 Bldgs)
Fort Sill
Lawton OK
Landholding Agency: Army
Property Number: 21201110027
Status: Unutilized
Directions: Bldgs: 00208, M4902, M4903, 06204
Reasons: Extensive deterioration

Bldg. 50A
McAlester
McAlester OK 74501
Landholding Agency: Army
Property Number: 21201110060
Status: Unutilized
Reasons: Within airport runway clear zone; Extensive deterioration

14 Bldgs.
Fort Sill
Lawton OK 73501
Landholding Agency: Army
Property Number: 21201130056
Status: Unutilized
Directions: 00214, 00216, 01445, 01447, 01448, 01468, 02524, 02594, 02809, 6472, 6473, 6474, M1453, M4905
Reasons: Extensive deterioration; Contamination

MA040
Regional Training Institute
Oklahoma City OK
Landholding Agency: Army
Property Number: 21201220010
Status: Unutilized
Comments: Nat'l security concerns; public access denied & no alternative method to gain access w/out comprising nat'l security

Reasons: Secured Area

Bldg. 137CO
Camp Gruber
Braggs OK 74423
Landholding Agency: Army
Property Number: 21201220028
Status: Unutilized
Comments: Nat'l security concerns; public access denied and no alternative method to gain access w/out comprising nat'l security
Reasons: Secured Area

2 Buildings
I C Tree Rd.
McAlester OK 74501
Landholding Agency: Army
Property Number: 21201230044
Status: Unutilized
Directions: 432,451
Comments: Public access denied due to anti-terrorism/force protection & satefy issues; no alternative method to gain access w/out comprising nat'l security
Reasons: Secured Area

Oregon

Bldg. 38
Tooele Army Depot
Umatilla Depot Activity
Hermiston OR 97838
Landholding Agency: Army
Property Number: 21199012174
Status: Underutilized
Directions: 13 miles east of Hermiston Oregon on I–84
Comments:
Reasons: Secured Area

Bldg. 53
Tooele Army Depot
Umatilla Depot Activity
Hermiston OR 97838
Landholding Agency: Army
Property Number: 21199012175
Status: Underutilized
Directions: 13 miles east of Hermiston Oregon on I–84
Comments:
Reasons: Secured Area

Bldg. 54
Tooele Army Depot
Umatilla Depot Activity
Hermiston OR 97838
Landholding Agency: Army
Property Number: 21199012176
Status: Underutilized
Directions: 8 miles east of Hermiston Oregon on I–84
Comments:
Reasons: Secured Area

Bldg. 56
Tooele Army Depot
Umatilla Depot Activity
Hermiston OR 97838
Landholding Agency: Army
Property Number: 21199012177
Status: Unutilized
Directions: 13 miles east of Hermiston Oregon on I–84
Comments:
Reasons: Secured Area

Bldg. 83
Tooele Army Depot
Umatilla Depot Activity
Hermiston OR 97838
Landholding Agency: Army
Property Number: 21199012178
Status: Underutilized
Directions: 13 miles east of Hermiston Oregon on I–84
Comments:
Reasons: Secured Area

Bldg. 85
Tooele Army Depot
Umatilla Depot Activity
Hermiston OR 97838
Landholding Agency: Army
Property Number: 21199012179
Status: Underutilized
Directions: 13 miles east of Hermiston Oregon on I–84
Comments:
Reasons: Secured Area

Bldg. 127
Tooele Army Depot
Umatilla Army Activity
Hermiston OR 97838
Landholding Agency: Army
Property Number: 21199012185
Status: Unutilized
Directions: 13 miles east of Hermiston Oregon on I–84
Comments:
Reasons: Secured Area

Bldg. 128
Tooele Army Depot
Umatilla Depot Activity
Hermiston OR 97838
Landholding Agency: Army
Property Number: 21199012186
Status: Unutilized
Directions: 13 miles east of Hermiston Oregon on I–84
Comments:
Reasons: Secured Area

Bldg. 155
Tooele Army Depot
Umatilla Depot Activity
Hermiston OR 97838
Landholding Agency: Army
Property Number: 21199012189
Status: Unutilized
Directions: 13 miles east of Hermiston Oregon on I–84
Comments:
Reasons: Secured Area

Bldg. 208
Tooele Army Depot
Umatilla Depot Activity
Hermiston OR 97838
Landholding Agency: Army
Property Number: 21199012190
Status: Underutilized
Directions: 13 miles east of Hermiston Oregon on I–84
Comments:
Reasons: Secured Area

Bldg. 211
Tooele Army Depot
Umatilla Depot Activity
Hermiston OR 97838
Landholding Agency: Army
Property Number: 21199012191
Status: Underutilized
Directions: 13 miles east of Hermiston Oregon on I–84
Comments:
Reasons: Secured Area

Bldg. 417
Tooele Army Depot
Umatilla Depot Activity
Hermiston OR 97838
Landholding Agency: Army
Property Number: 21199012195
Status: Unutilized
Directions: 8 miles east of Hermiston Oregon on I–84
Comments:
Reasons: Secured Area

Bldg. 418
Tooele Army Depot
Umatilla Depot Activity
Hermiston OR 97838
Landholding Agency: Army
Property Number: 21199012196
Status: Unutilized
Directions: 8 Miles East of Hermiston, Oregon on I–84
Comments:
Reasons: Secured Area

Bldg. 433
Tooele Army Depot
Umatilla Depot Activity
Hermiston OR 97838
Landholding Agency: Army
Property Number: 21199012197
Status: Underutilized
Directions: 13 Miles East of Hermiston, Oregon I–84
Comments:
Reasons: Secured Area

Bldg. 457
Tooele Army Depot
Umatilla Depot Activity
Hermiston OR 97838
Landholding Agency: Army
Property Number: 21199012198
Status: Underutilized
Directions: 8 Miles East of Hermiston, Oregon I–84
Comments:
Reasons: Secured Area

Bldg. 482
Tooele Army Depot
Umatilla Depot Activity
Hermiston OR 97838
Landholding Agency: Army
Property Number: 21199012199
Status: Unutilized
Directions: 13 Miles East of Hermiston, Oregon I–84
Comments:
Reasons: Secured Area

Bldg. 483
Tooele Army Depot
Umatilla Depot Activity
Hermiston OR 97838
Landholding Agency: Army
Property Number: 21199012200
Status: Unutilized
Directions: 13 Miles East of Hermiston Oregon on I–84
Comments:
Reasons: Secured Area

Bldg. 484
Tooele Army Depot
Umatilla Depot Activity
Hermiston OR 97838
Landholding Agency: Army
Property Number: 21199012201
Status: Unutilized
Directions: 13 Miles East of Hermiston Oregon I–84
Comments:
Reasons: Secured Area

Bldg. 485
Tooele Army Depot

Umatilla Depot Activity
Hermiston OR 97838
Landholding Agency: Army
Property Number: 21199012202
Status: Unutilized
Directions: 13 Miles East of Hermiston Oregon on I–84
Comments:
Reasons: Secured Area

Bldg. 486
Tooele Army Depot
Umatilla Depot Activity
Hermiston OR 97838
Landholding Agency: Army
Property Number: 21199012203
Status: Unutilized
Directions: 8 Miles East of Hermiston Oregon I–84
Comments:
Reasons: Secured Area

Bldg. 488
Tooele Army Depot
Umatilla Depot Activity
Hermiston OR 97838
Landholding Agency: Army
Property Number: 21199012204
Status: Unutilized
Directions: 8 Miles East of Hermiston Oregon on I–84
Comments:
Reasons: Secured Area

Bldg. 490
Tooele Army Depot
Umatilla Depot Activity
Hermiston OR 97838
Landholding Agency: Army
Property Number: 21199012205
Status: Unutilized
Directions: 13 Miles East of Hermiston Oregon on I–84
Comments:
Reasons: Secured Area

Bldg. 493
Tooele Army Depot
Umatilla Depot Activity
Hermiston OR 97838
Landholding Agency: Army
Property Number: 21199012207
Status: Unutilized
Directions: 8 Miles East of Hermiston, Oregon I–84
Comments:
Reasons: Secured Area

Bldg. 494
Tooele Army Depot
Umatilla Depot Activity
Hermiston OR 97838
Landholding Agency: Army
Property Number: 21199012208
Status: Unutilized
Directions: 13 Miles East of Hermiston, Oregon on I–84
Comments:
Reasons: Secured Area

Bldg. 608
Tooele Army Depot
Umatilla Depot Activity
Hermiston OR 97838
Landholding Agency: Army
Property Number: 21199012217
Status: Underutilized
Directions: 8 Miles East of Hermiston, Oregon I–84
Comments:
Reasons: Secured Area

Bldg. 616
Tooele Army Depot
Umatilla Depot Activity
Hermiston OR 97838
Landholding Agency: Army
Property Number: 21199012225
Status: Unutilized
Directions: 13 Miles East of Hermiston, Oregon I–84
Comments:
Reasons: Secured Area

Bldg. 624
Tooele Army Depot
Umatilla Depot Activity
Hermiston OR 97838
Landholding Agency: Army
Property Number: 21199012229
Status: Underutilized
Directions: 8 Miles East of Hermiston, Oregon on I–84
Comments:
Reasons: Secured Area

Bldg. 431
Tooele Army Depot
Umatilla Depot Activity
Hermiston OR 97838
Landholding Agency: Army
Property Number: 21199012279
Status: Unutilized
Directions:
Comments:
Reasons: Secured Area

Bldg. 202
Tooele Army Depot
Umatilla Depot
Hermiston OR 97838
Landholding Agency: Army
Property Number: 21199014304
Status: Unutilized
Directions: 13 miles east of Hermiston, Oregon on I–84
Comments:
Reasons: Secured Area

Bldg. 203
Tooele Army Depot
Umatilla Depot
Hermiston OR 97838
Landholding Agency: Army
Property Number: 21199014305
Status: Unutilized
Directions: 13 miles east of Hermiston, Oregon on I–84.
Comments:
Reasons: Secured Area

Bldg. 137
Tooele Army Depot
Umatilla Depot Activity
Hermiston OR 97838
Landholding Agency: Army
Property Number: 21199014782
Status: Unutilized
Directions: 8 miles east of Hermiston, OR on I–84
Comments:
Reasons: Secured Area

Bldg. 489
Tooele Army Depot
Umatilla Depot Activity
Hermiston OR 97838
Landholding Agency: Army
Property Number: 21199030362
Status: Unutilized
Directions: 8 miles East of Hermiston, OR. on I–84.
Comments:
Reasons: Secured Area

Bldg. 154
Tooele Army Depot
Umatilla Depot Activity
Hermiston OR 97838
Landholding Agency: Army
Property Number: 21199030363
Status: Unutilized
Directions: 13 miles East of Hermiston, OR on I–84
Comments:
Reasons: Secured Area

Bldg. 619
Umatilla Depot Activity
Hermiston OR 97838
Landholding Agency: Army
Property Number: 21199120032
Status: Unutilized
Directions: 8 miles east of Hermiston, Oregon on I–84.
Comments:
Reasons: Secured Area

Bldgs. 122, 123, 125
Umatilla Chemical Depot
OR 97838
Landholding Agency: Army
Property Number: 21199840108
Status: Unutilized
Directions:
Comments:
Reasons: Secured Area

Bldgs. 204, 205
Umatilla Chemical Depot
OR 97838
Landholding Agency: Army
Property Number: 21199840109
Status: Unutilized
Directions:
Comments:
Reasons: Secured Area

Bldg. 346
Umatilla Chemical Depot
OR 97838
Landholding Agency: Army
Property Number: 21199840110
Status: Unutilized
Directions:
Comments:
Reasons: Secured Area

Pennsylvania

8 Bldgs.
Fort Indiantown Gap
Annville PA 17003–5000
Landholding Agency: Army
Property Number: 21199810183
Status: Unutilized
Directions: T–2–50, T–2–52, T–2–53, T–2–54, T–2–55, T–2–57, T–2–58, T–2–59
Comments:
Reasons: Extensive deterioration

4 Bldgs.
Fort Indiantown Gap
Annville PA 17003–5000
Landholding Agency: Army
Property Number: 21199810184
Status: Unutilized
Directions: T–2–64, T–2–65, T–2–66, T–2–67
Comments:
Reasons: Extensive deterioration

11 Bldgs.
Fort Indiantown Gap
Annville PA 17003–5000
Landholding Agency: Army
Property Number: 21199810190

Status: Unutilized
Directions: T–10–24, T–10–25, T–10–26, T–10–27, T–10–28, T–10–29, T–10–30, T–10–31, T–10–32, T–10–33, T–10–34
Comments:
Reasons: Extensive deterioration

Bldg. 01006
Tobyhanna Army Depot
Tobyhanna PA 18466
Landholding Agency: Army
Property Number: 21200330068
Status: Unutilized
GSA Number:
Reasons: Extensive deterioration

Bldg. 00635
Carlisle Barracks
Carlisle PA 17013
Landholding Agency: Army
Property Number: 21200640115
Status: Unutilized
Reasons: Extensive deterioration

Bldgs. 00302, 00630, 00846
Carlisle Barracks
Cumberland PA 17013
Landholding Agency: Army
Property Number: 21200720107
Status: Unutilized
Reasons: Extensive deterioration

Bldg. 00301
Carlisle Barracks
Cumberland PA 17013
Landholding Agency: Army
Property Number: 21200740026
Status: Unutilized
Reasons: Extensive deterioration

5 Bldgs.
Tobyhanna Army Depot
Monroe PA 18466
Landholding Agency: Army
Property Number: 21200820074
Status: Unutilized
Directions: 1004, 1005, 1009, 1010, 1016
Comments: Bldgs. 22 and CPR22 were demolished 12.01.2008
Reasons: Extensive deterioration; Within 2000 ft. of flammable or explosive material; Secured Area

Bldg. 00257
Carlisle Barracks
Cumberland PA 17013
Landholding Agency: Army
Property Number: 21200830001
Status: Excess
Reasons: Extensive deterioration

Bldg. 00017
Scranton Army Ammo Plant
Scranton PA 18505
Landholding Agency: Army
Property Number: 21200840048
Status: Unutilized
Reasons: Extensive deterioration; Secured Area

5 Bldgs.
Letterkenny Army Depot
Chambersburg PA 17201
Landholding Agency: Army
Property Number: 21200920063
Status: Unutilized
Directions: 01466, 03231, 03243, 03244, 03245
Reasons: Within 2000 ft. of flammable or explosive material; Secured Area

Bldg. S0093
Tobyhanna Army Depot
Monroe PA 18466
Landholding Agency: Army
Property Number: 21200920065
Status: Underutilized
Reasons: Within 2000 ft. of flammable or explosive material; Secured Area

4 Bldgs.
Letterkenny Army Depot
Franklin PA 17201
Landholding Agency: Army
Property Number: 21200940034
Status: Unutilized
Directions: S3627, 03811, S4344, S5298
Reasons: Secured Area

Bldg. 891
Carlisle Barracks
Cumberland PA 17013
Landholding Agency: Army
Property Number: 21201020023
Status: Excess
Reasons: Secured Area

Bldg.70
Tobyhanna Army Depot
Tobyhanna PA 18466
Landholding Agency: Army
Property Number: 21201210048
Status: Underutilized
Comments: Nat'l security concerns; no public access and no alternative method to gain access
Reasons: Secured Area

Bldg. 71
Tobyhanna Army Depot
Tobyhanna PA 18466
Landholding Agency: Army
Property Number: 21201220008
Status: Underutilized
Comments: Nat'l security concerns; public access is denied and no alternative method to gain access w/out comprising nat'l security
Reasons: Secured Area

Puerto Rico

8 Bldgs.
Fort Buchanan
00089, 00091 thru 00097
Guaynabo PR 00934
Landholding Agency: Army
Property Number: 21200530061
Status: Excess
Reasons: Extensive deterioration

3 Bldgs.
Fort Buchanan
00090, 00099, 00036
Guaynabo PR 00934
Landholding Agency: Army
Property Number: 21200530062
Status: Excess
Reasons: Extensive deterioration

12 Bldgs.
Fort Buchanan
Guaynabo PR 00934
Landholding Agency: Army
Property Number: 21200530063
Status: Excess
Directions: 01000–01001, 01002, 01010 thru 01015, 0116, 0123 01024
Reasons: Extensive deterioration

8 Bldgs.
Fort Buchanan
Guaynabo PR 00934
Landholding Agency: Army
Property Number: 21200610023
Status: Excess
Directions: 01003, 01004, 01005, 01006, 01007, 01008, 01009, 01026
Reasons: Extensive deterioration

8 Bldgs.
Fort Buchanan
Guaynabo PR
Landholding Agency: Army
Property Number: 21200620041
Status: Excess
Directions: 01003, 01004, 01005, 01006, 01007, 01008, 01009, 01026
Reasons: Extensive deterioration

5 Bldgs.
Fort Buchanan
Guaynabo PR 00934
Landholding Agency: Army
Property Number: 21200830027
Status: Excess
Directions: 312, 348, 519, 746, 1025
Reasons: Extensive deterioration

Bldgs. 148, 380, 381, 386
Fort Buchanan
Guaynabo PR 00934
Landholding Agency: Army
Property Number: 21200840049
Status: Excess
Reasons: Extensive deterioration

Bldg. 1020
Fort Buchanan
Guaynabo PR 00934
Landholding Agency: Army
Property Number: 21200920066
Status: Excess
Reasons: Extensive deterioration

7 Bldg.
Fort Buchanan
Guaynabo PR
Landholding Agency: Army
Property Number: 21201040021
Status: Excess
Directions: 76, 83, 84, 85, 86, 87, 98
Reasons: Secured Area; Extensive deterioration

USAG Fort Buchanan (5 Bldgs.)
null
Fort Buchanan PR 00934
Landholding Agency: Army
Property Number: 21201110039
Status: Excess
Directions: Bldgs: 00177, 01017, 01018, 01019, 01021
Reasons: Extensive deterioration

USAG, Fort Buchanan (5 Bldgs)
USAG, Fort Buchanan
Fort Buchanan PR 00934
Landholding Agency: Army
Property Number: 21201110040
Status: Excess
Directions: Bldg: 01022, 01101, 01102, 01103, 01104
Reasons: Extensive deterioration

3 Bldgs.
USAG
Fort Buchanan
1105–1107 Raintree Street
Coconut Grove
Fort Buchanan PR 00934
Landholding Agency: Army
Property Number: 21201110041
Status: Excess
Reasons: Extensive deterioration

6 Bldgs.
USAG
Fort Buchanan PR 00934

Landholding Agency: Army
Property Number: 21201120001
Status: Excess
Directions: 1252, 1253, 1254, 1255, 1256, 1257
Reasons: Extensive deterioration

6 Bldgs.
USAG
Fort Buchanan PR 00934
Landholding Agency: Army
Property Number: 21201120002
Status: Excess
Directions: 1274, 1275, 1276, 1277, 1278, 1279
Reasons: Extensive deterioration

6 Bldgs.
USAG
Fort Buchanan PR 00934
Landholding Agency: Army
Property Number: 21201120003
Status: Excess
Directions: 1280, 1281, 1282, 1283, 1285, 1286
Reasons: Extensive deterioration

4 Bldgs.
USAG
Fort Buchanan PR 00934
Landholding Agency: Army
Property Number: 21201120004
Status: Excess
Directions: 1287, 1288, 1289, 1290
Reasons: Extensive deterioration

Bldg. 2034
USARC
Army Reserve Ctr. PR 00735
Landholding Agency: Army
Property Number: 21201140007
Status: Excess
Reasons: Extensive deterioration

12 Bldgs.
Ft. Buchanan
Ft. Buchanan PR 00934
Landholding Agency: Army
Property Number: 21201140008
Status: Excess
Directions: 13, 15, 30, 517, 556, 576, 1315, 1316, 1319, 1320, 1323, 1324
Reasons: Extensive deterioration

Rhode Island

Bldgs. 0A65V, 340, 382
Camp Fogarty Training Site
Kent RI 02818
Landholding Agency: Army
Property Number: 21201040022
Status: Excess
Reasons: Secured Area

Bldg. 000P2
570 Read Schoolhouse Rd.
Coventry RI 02816
Landholding Agency: Army
Property Number: 21201140038
Status: Excess
Reasons: Contamination; Secured Area

Samoa

Bldg. 00002
Army Reserve Center
Pago Pago AQ 96799
Landholding Agency: Army
Property Number: 21200810001
Status: Unutilized
Reasons: Floodway; Secured Area

Bldg. 00644
Tree Top U.S. Army Reserve Ctr
Pago AQ
Landholding Agency: Army
Property Number: 21201040039
Status: Unutilized
Reasons: Secured Area; Extensive deterioration

South Carolina

Bldg. 2511
Fort Jackson
Ft. Jackson SC 29207
Landholding Agency: Army
Property Number: 21199620312
Status: Unutilized
Directions:
Comments:
Reasons: Extensive deterioration

Bldg. 2495
Fort Jackson
Ft. Jackson SC 29207
Landholding Agency: Army
Property Number: 21199720095
Status: Unutilized
Directions:
Comments:
Reasons: Extensive deterioration

Bldg. 9512
Fort Jackson
Ft. Jackson SC 29207
Landholding Agency: Army
Property Number: 21199730154
Status: Unutilized
Directions:
Comments:
Reasons: Extensive deterioration

Bldg. 11550
Fort Jackson
Ft. Jackson SC 29207
Landholding Agency: Army
Property Number: 21199730157
Status: Unutilized
Directions:
Comments:
Reasons: Extensive deterioration

Facility J8575
Fort Jackson
Ft. Jackson SC 29207
Landholding Agency: Army
Property Number: 21199740138
Status: Unutilized
Directions:
Comments:
Reasons: Extensive deterioration

Bldg. 1539
Fort Jackson SC 29207
Landholding Agency: Army
Property Number: 21199830142
Status: Unutilized
Directions:
Comments:
Reasons: Extensive deterioration

Bldg. 2544
Fort Jackson SC 29207
Landholding Agency: Army
Property Number: 21199830150
Status: Unutilized
Directions:
Comments:
Reasons: Extensive deterioration

Bldg. 5882
Fort Jackson
Richland SC 29207
Landholding Agency: Army
Property Number: 21200520050
Status: Unutilized
Reasons: Extensive deterioration

Bldg. M2617
Fort Jackson
Richland SC 29207
Landholding Agency: Army
Property Number: 21200810031
Status: Unutilized
Reasons: Secured Area

Bldg. 10810
Ft. Jackson
Richland SC 29207
Landholding Agency: Army
Property Number: 21200920067
Status: Excess
Reasons: Secured Area

Arts and Crafts/Wood Shop
Ft. Jackson
Ft. Jackson SC
Landholding Agency: Army
Property Number: 21201120008
Status: Unutilized
Reasons: Secured Area; Extensive deterioration

Bldg. 01916
DRMS Storage Facility
Ft. Jackson SC
Landholding Agency: Army
Property Number: 21201120020
Status: Unutilized
Reasons: Secured Area; Extensive deterioration

Bldg. 02101
Ft. Jackson
Ft. Jackson SC 29207
Landholding Agency: Army
Property Number: 21201140024
Status: Underutilized
Reasons: Secured Area

Bldg. 01916
1916 Ewell Rd.
Fort Jackson SC 29207
Landholding Agency: Army
Property Number: 21201210084
Status: Unutilized
Comments: Nat'l security concerns; restricted access and no alternative method of access
Reasons: Secured Area

Bldgs. 04376 and J4236
null
Fort Jackson SC 29207
Landholding Agency: Army
Property Number: 21201210085
Status: Unutilized
Comments: Nat'l security concerns; restricted access and no alternative method of access
Reasons: Secured Area

Bldg. 01745
1745 Housing Rd.
Fort Jackson
Columbia SC 29207
Landholding Agency: Army
Property Number: 21201210086
Status: Underutilized
Comments: Nat'l security concerns; restricted access and no alternative method of access
Reasons: Secured Area

Bldg. 4407
Ft. Jackson
Ft. Jackson SC
Landholding Agency: Army
Property Number: 21201220023
Status: Excess
Comments: Nat'l security concerns; public access denied and no alternative method to gain access w/out comprising nat'l security

Reasons: Secured Area

Bldg. 1727
Ft. Jackson
Ft. Jackson SC
Landholding Agency: Army
Property Number: 21201220024
Status: Unutilized
Comments: Nat'l security concerns; public access denied and no alternative method to gain access w/out comprising nat'l security
Reasons: Secured Area

3 Bldgs.
Ft. Jackson
Ft. Jackson SC 29207
Landholding Agency: Army
Property Number: 21201220026
Status: Excess
Directions: 2441,4461,2451
Comments: Nat'l security concerns;public access denied and no alternative method to gain access w/out comprising nat'l security
Reasons: Secured Area

J5800
Wildcat Rd.
Ft. Jackson SC 29207
Landholding Agency: Army
Property Number: 21201230013
Status: Underutilized
Comments: Controlled access pts.; public access denied & no alternative method to gain access w/out comprising nat'l security
Reasons: Secured Area

4 Buildings
Golden Arrow Rd.
Ft. Jackson SC 29207
Landholding Agency: Army
Property Number: 21201230014
Status: Underutilized
Directions: F5035, F5036, F5037, F5048
Comments: Controlled access pts.; public access denied & no alternative method to gain access w/out comprising nat'l security
Reasons: Secured Area

2 Buildings
Hilton Field
Ft. Jackson SC 29207
Landholding Agency: Army
Property Number: 21201230015
Status: Underutilized
Directions: E3871 & E3876
Comments: Controlled access pts.; public access denied & no alternative method to gain access w/out comprising nat'l security
Reasons: Secured Area

4400
Early St & Jackson Blvd.
Ft. Jackson SC 29207
Landholding Agency: Army
Property Number: 21201230016
Status: Underutilized
Comments: Controlled access pts.; public access denied & no alternative method to gain access w/out comprising nat'l security
Reasons: Secured Area

2762
Semmes Rd.
Ft. Jackson SC 29207
Landholding Agency: Army
Property Number: 21201230017
Status: Underutilized
Comments: Controlled access pts.; public access denied & no alternative method to gain access w/out comprising nat'l security
Reasons: Secured Area

3 Buildings
Bragg St.
Ft. Jackson SC 29207
Landholding Agency: Army
Property Number: 21201230018
Status: Underutilized
Directions: 2375, 2376, 2377
Comments: Controlled access pts.; public access denied & no alternative method to gain access w/out comprising nat'l security
Reasons: Secured Area

6 Buildings
Sumter Ave.
Ft. Jackson SC 45455
Landholding Agency: Army
Property Number: 21201230026
Status: Underutilized
Directions: 2270, 2250, 2280, 2260, 2240, 2230
Comments: Control gates; public access denied & no alternative method to gain access w/out comprising nat'l security
Reasons: Secured Area

8 Buildings
Magrunder Ave.
Ft. Jackson SC 29207
Landholding Agency: Army
Property Number: 21201230027
Status: Underutilized
Directions: 2255, 2275, 2277, 2360, 2361, 2370, 2371, 2265
Comments: Controlled access pts.; public access denied & no alternative method w/ out comprising nat'l security
Reasons: Secured Area

2285
Beaurgard St.
Ft. Jackson SC 45455
Landholding Agency: Army
Property Number: 21201230056
Status: Underutilized
Comments: Control gates;public access denied & no alternative method to gain access w/out compring nat'l security
Reasons: Secured Area

South Dakota

Bldgs. 00038, 00039
Lewis & Clark USARC
Bismarck SD 58504
Landholding Agency: Army
Property Number: 21200710033
Status: Unutilized
Reasons: Secured Area

Tennessee

Bldg. 225
Holston Army Ammunition Plant
Kingsport TN 61299–6000
Landholding Agency: Army
Property Number: 21199012304
Status: Unutilized
Directions:
Comments:
Reasons: Secured Area

Bldg. 226
Holston Army Ammunition Plant
Kingsport TN 61299–6000
Landholding Agency: Army
Property Number: 21199012305
Status: Unutilized
Directions:
Comments:
Reasons: Secured Area

Bldg. F9
Holston Army Ammunition Plant
Kingsport TN 61299–6000
Landholding Agency: Army
Property Number: 21199012306
Status: Unutilized
Directions:
Comments:
Reasons: Within 2000 ft. of flammable or explosive material; Secured Area

Bldg. P5
Holston Army Ammunition Plant
Kingsport TN 61299–6000
Landholding Agency: Army
Property Number: 21199012307
Status: Unutilized
Directions:
Comments:
Reasons: Within 2000 ft. of flammable or explosive material; Secured Area

Bldg. P9
Holston Army Ammunition Plant
Kingsport TN 61299–6000
Landholding Agency: Army
Property Number: 21199012308
Status: Unutilized
Directions:
Comments:
Reasons: Within 2000 ft. of flammable or explosive material; Secured Area

Bldg. V1
Holston Army Ammunition Plant
Kingsport TN 61299–6000
Landholding Agency: Army
Property Number: 21199012309
Status: Unutilized
Directions:
Comments:
Reasons: Within 2000 ft. of flammable or explosive material; Secured Area

Bldg. V3
Holston Army Ammunition Plant
Kingsport TN 61299–6000
Landholding Agency: Army
Property Number: 21199012311
Status: Unutilized
Directions:
Comments:
Reasons: Secured Area; Within 2000 ft. of flammable or explosive material

Bldg. V7
Holston Army Ammunition Plant
Kingsport TN 61299–6000
Landholding Agency: Army
Property Number: 21199012312
Status: Unutilized
Directions:
Comments:
Reasons: Secured Area; Within 2000 ft. of flammable or explosive material

Bldg. F–1
Holston Army Ammunition Plant
Kingsport TN 61299–6000
Landholding Agency: Army
Property Number: 21199012314
Status: Unutilized
Directions:
Comments:
Reasons: Secured Area; Within 2000 ft. of flammable or explosive material

Bldg. 107
Holston Army Ammunition Plant
Kingsport TN 61299–6000
Landholding Agency: Army
Property Number: 21199012316
Status: Unutilized
Directions:
Comments:

Reasons: Secured Area; Within 2000 ft. of flammable or explosive material

Bldg. R9
Holston Army Ammunition Plant
Kingsport TN 61299–6000
Landholding Agency: Army
Property Number: 21199012317
Status: Unutilized
Directions:
Comments:
Reasons: Within 2000 ft. of flammable or explosive material; Secured Area

Bldg. W1
Holston Army Ammunition Plant
Kingsport TN 61299–6000
Landholding Agency: Army
Property Number: 21199012328
Status: Unutilized
Directions:
Comments:
Reasons: Secured Area; Within 2000 ft. of flammable or explosive material

Bldg. P10
Holston Army Ammunition Plant
Kingsport TN 61299–6000
Landholding Agency: Army
Property Number: 21199012330
Status: Unutilized
Directions:
Comments:
Reasons: Secured Area; Within 2000 ft. of flammable or explosive material

Bldg. U1
Holston Army Ammunition Plant
Kingsport TN 61299–6000
Landholding Agency: Army
Property Number: 21199012332
Status: Unutilized
Directions:
Comments:
Reasons: Secured Area; Within 2000 ft. of flammable or explosive material

Bldg. P1
Holston Army Ammunition Plant
Kingsport TN 61299–6000
Landholding Agency: Army
Property Number: 21199012334
Status: Unutilized
Directions:
Comments:
Reasons: Secured Area; Within 2000 ft. of flammable or explosive material

Bldg. V9
Holston Army Ammunition Plant
Kingsport TN 61299–6000
Landholding Agency: Army
Property Number: 21199012337
Status: Unutilized
Directions:
Comments:
Reasons: Secured Area; Within 2000 ft. of flammable or explosive material

Bldg. R1
Holston Army Ammunition Plant
Kingsport TN 61299–6000
Landholding Agency: Army
Property Number: 21199013790
Status: Unutilized
Directions:
Comments:
Reasons: Secured Area

Holston Army Ammunition Plant
4509 West Stone Drive
Kingsport TN 37660–9982
Landholding Agency: Army
Property Number: 21199140613
Status: Unutilized
Directions:
Comments:
Reasons: Within 2000 ft. of flammable or explosive material; Secured Area

Bldg. I–156
Milan Army Ammunition Plant
Milan TN 38358
Landholding Agency: Army
Property Number: 21199240447
Status: Unutilized
Directions:
Comments:
Reasons: Secured Area

Bldg. J–52
Milan Army Ammunition Plant
Milan TN 38358
Landholding Agency: Army
Property Number: 21199240448
Status: Unutilized
Directions:
Comments:
Reasons: Secured Area

Bldg. K–8
Milan Army Ammunition Plant
Milan TN 38358
Landholding Agency: Army
Property Number: 21199240449
Status: Unutilized
Directions:
Comments:
Reasons: Secured Area

Bldg. I010
Holston Army Ammunition Plant
Kingsport TN 61299–6000
Landholding Agency: Army
Property Number: 21199440212
Status: Unutilized
Directions:
Comments:
Reasons: Secured Area; Within 2000 ft. of flammable or explosive material

Bldg. J010
Holston Army Ammunition Plant
Kingsport TN 61299–6000
Landholding Agency: Army
Property Number: 21199440213
Status: Unutilized
Directions:
Comments:
Reasons: Within 2000 ft. of flammable or explosive material; Secured Area

Bldg. K010
Holston Army Ammunition Plant
Kingsport TN 61299–6000
Landholding Agency: Army
Property Number: 21199440214
Status: Unutilized
Directions:
Comments:
Reasons: Secured Area; Within 2000 ft. of flammable or explosive material

Bldg. L010
Holston Army Ammunition Plant
Kingsport TN 61299–6000
Landholding Agency: Army
Property Number: 21199440215
Status: Unutilized
Directions:
Comments:
Reasons: Within 2000 ft. of flammable or explosive material; Secured Area

Bldg. M010
Holston Army Ammunition Plant
Kingsport TN 61299–6000
Landholding Agency: Army
Property Number: 21199440216
Status: Unutilized
Directions:
Comments:
Reasons: Secured Area; Within 2000 ft. of flammable or explosive material

Bldg. J001
Holston Army Ammunition Plant
Kingsport TN
Landholding Agency: Army
Property Number: 21199510025
Status: Unutilized
Directions:
Comments:
Reasons: Secured Area

Bldg. M001
Holston Army Ammunition Plant
Kingsport TN
Landholding Agency: Army
Property Number: 21199510026
Status: Unutilized
Directions:
Comments:
Reasons: Secured Area; Within 2000 ft. of flammable or explosive material

Bldg. N001
Holston Army Ammunition Plant
Kingsport TN
Landholding Agency: Army
Property Number: 21199510027
Status: Unutilized
Directions:
Comments:
Reasons: Within 2000 ft. of flammable or explosive material; Secured Area

Bldg. A10
Holston Army Ammo Plant
Kingsport TN 37660
Landholding Agency: Army
Property Number: 21200230035
Status: Excess
GSA Number:
Reasons: Extensive deterioration

Bldg. 227
Holston Army Ammo Plant
Kingsport TN 37660
Landholding Agency: Army
Property Number: 21200310040
Status: Excess
GSA Number:
Reasons: Extensive deterioration

Bldgs. D–1, D–2, D–6 thru D–10
Holston Army Ammo Plant
Kingsport TN 37660
Landholding Agency: Army
Property Number: 21200320054
Status: Excess
GSA Number:
Reasons: Extensive deterioration; Within 2000 ft. of flammable or explosive material; Secured Area

6 Bldgs.
Holston Army Ammo Plant
E–1, E–2, E–5, E–7 thru E–9
Kingsport TN 37660
Landholding Agency: Army
Property Number: 21200320055
Status: Excess
GSA Number:
Reasons: Secured Area; Extensive deterioration; Within 2000 ft. of flammable or explosive material

Bldgs. G–1, G–2, G–3, G–9
Holston Army Ammo Plant
Kingsport TN 37660
Landholding Agency: Army
Property Number: 21200320056
Status: Excess
GSA Number:
Reasons: Secured Area; Extensive deterioration; Within 2000 ft. of flammable or explosive material

5 Bldgs.
Holston Army Ammo Plant
H–1 thru H–3, H–9, H–10
Kingsport TN 37660
Landholding Agency: Army
Property Number: 21200320057
Status: Excess
GSA Number:
Reasons: Extensive deterioration; Secured Area; Within 2000 ft. of flammable or explosive material

5 Bldgs.
Holston Army Ammo Plant
I–1, I–2, I–7, I–8, I–9
Kingsport TN 37660
Landholding Agency: Army
Property Number: 21200320058
Status: Excess
GSA Number:
Reasons: Secured Area; Within 2000 ft. of flammable or explosive material; Extensive deterioration

Bldgs. K–1, K–7, K–9
Holston Army Ammo Plant
Kingsport TN 37660
Landholding Agency: Army
Property Number: 21200320059
Status: Excess
GSA Number:
Reasons: Extensive deterioration; Within 2000 ft. of flammable or explosive material; Secured Area

Bldgs. L–1M, L–2, L–9
Holston Army Ammo Plant
Kingsport TN 37660
Landholding Agency: Army
Property Number: 21200320060
Status: Excess
GSA Number:
Reasons: Extensive deterioration; Secured Area; Within 2000 ft. of flammable or explosive material

Bldgs. O–1, O–7, O–9
Holston Army Ammo Plant
Kingsport TN 37660
Landholding Agency: Army
Property Number: 21200320061
Status: Excess
GSA Number:
Reasons: Secured Area; Within 2000 ft. of flammable or explosive material; Extensive deterioration

Bldgs. J–2, J–6 thru J–9
Holston Army Ammo Plant
Kingsport TN 37660
Landholding Agency: Army
Property Number: 21200320062
Status: Excess
GSA Number:
Reasons: Extensive deterioration; Within 2000 ft. of flammable or explosive material; Secured Area

Bldgs. M–2, M–7, M–9
Holston Army Ammo Plant
Kingsport TN 37660
Landholding Agency: Army
Property Number: 21200320063
Status: Excess
GSA Number:
Reasons: Secured Area; Within 2000 ft. of flammable or explosive material; Extensive deterioration

Bldg. U–2
Holston Army Ammo Plant
Kingsport TN 37660
Landholding Agency: Army
Property Number: 21200320064
Status: Excess
GSA Number:
Reasons: Extensive deterioration; Within 2000 ft. of flammable or explosive material; Secured Area

Bldgs. P–3, P–7
Holston Army Ammo Plant
Kingsport TN 37660
Landholding Agency: Army
Property Number: 21200320065
Status: Excess
GSA Number:
Reasons: Within 2000 ft. of flammable or explosive material; Extensive deterioration; Secured Area

Bldgs. 4, A–5, B–5, B–9
Holston Army Ammo Plant
Kingsport TN 37660
Landholding Agency: Army
Property Number: 21200320066
Status: Excess
GSA Number:
Reasons: Within 2000 ft. of flammable or explosive material; Extensive deterioration; Secured Area

Bldgs. C–6, N–9, N–10, V–10
Holston Army Ammo Plant
Kingsport TN 37660
Landholding Agency: Army
Property Number: 21200320067
Status: Excess
GSA Number:
Reasons: Extensive deterioration; Secured Area; Within 2000 ft. of flammable or explosive material

Bldgs. A14, A20, A28
Holston Army Ammo Plant
Kingsport TN 37660
Landholding Agency: Army
Property Number: 21200320068
Status: Excess
GSA Number:
Reasons: Extensive deterioration; Secured Area; Within 2000 ft. of flammable or explosive material

4 Bldgs.
Holston Army Ammo Plant 301, 303B, 304, 312
Kingsport TN 37660
Landholding Agency: Army
Property Number: 21200320071
Status: Excess
GSA Number:
Reasons: Extensive deterioration; Secured Area; Within 2000 ft. of flammable or explosive material

Bldgs. 401, 408
Holston Army Ammo Plant
Kingsport TN 37660
Landholding Agency: Army
Property Number: 21200320073
Status: Excess
GSA Number:
Reasons: Extensive deterioration; Within 2000 ft. of flammable or explosive material; Secured Area

6 Bldgs.
Fort Campbell
Ft. Campbell TN 42223
Landholding Agency: Army
Property Number: 21200330100
Status: Unutilized
GSA Number:
Directions: 6730, 6731, 6732, 6733, 6735, 6736
Reasons: Extensive deterioration

Bldg. A–35
Holston Army Ammo Plant
Kingsport TN 37660
Landholding Agency: Army
Property Number: 21200340056
Status: Unutilized
GSA Number:
Reasons: Secured Area; Within 2000 ft. of flammable or explosive material

Bldg. 4–A
Holston Army Ammo Plant
Kingsort TN 37660
Landholding Agency: Army
Property Number: 21200510042
Status: Unutilized
Reasons: Secured Area

Air Raid Shelters
Milan Army Ammo Plant
Gibson TN 38358
Landholding Agency: Army
Property Number: 21200520051
Status: Excess
Directions: A001U–A119U, B001U–B008U, C001U–C010U, D001U–D010U, E001U–E010U, F001U–F010U, G001U–G010U, H001U–H005U
Reasons: Within 2000 ft. of flammable or explosive material; Extensive deterioration; Secured Area

Bldg. X0028
Milan Army Ammo Plant
Gibson TN 38358
Landholding Agency: Army
Property Number: 21200520052
Status: Excess
Reasons: Extensive deterioration; Within 2000 ft. of flammable or explosive material; Secured Area

Bldgs. 8(1), 8(2), 8(4)
Holston Army Ammo Plant
Kingsport TN 37660
Landholding Agency: Army
Property Number: 21200530064
Status: Unutilized
Reasons: Within 2000 ft. of flammable or explosive material; Secured Area

Bldgs. 8C, 8E
Holston Army Ammo Plant
Kingsport TN 37660
Landholding Agency: Army
Property Number: 21200530065
Status: Unutilized
Reasons: Within 2000 ft. of flammable or explosive material; Secured Area

Bldgs. 07878, 07882, 07884
Fort Campbell
Montgomery TN 42223
Landholding Agency: Army
Property Number: 21200540063
Status: Unutilized
Reasons: Extensive deterioration

Bldgs. 07878, 07882, 07884
Fort Campbell
Montgomery TN 42223
Landholding Agency: Army
Property Number: 21200610027
Status: Unutilized
Reasons: Extensive deterioration

Bldgs. D–3, J–5
Holston Army Ammo Plant
Kingsport TN 37660
Landholding Agency: Army
Property Number: 21200640069
Status: Unutilized
Reasons: Within 2000 ft. of flammable or explosive material; Secured Area

Bldg. H–8
Holston Army Ammo Plant
Kingsport TN 37660
Landholding Agency: Army
Property Number: 21200640070
Status: Unutilized
Reasons: Within 2000 ft. of flammable or explosive material; Secured Area; Extensive deterioration

Bldgs. 136, 148
Holston Army Ammo Plant
Kingsport TN 37660
Landholding Agency: Army
Property Number: 21200640071
Status: Unutilized
Reasons: Secured Area; Within 2000 ft. of flammable or explosive material

Bldgs. 318, 342
Holston Army Ammo Plant
Kingsport TN 37660
Landholding Agency: Army
Property Number: 21200640072
Status: Unutilized
Reasons: Secured Area; Within 2000 ft. of flammable or explosive material

Bldg. 8(3)
Holston Army Ammo Plant
Kingsport TN 37660
Landholding Agency: Army
Property Number: 21200710035
Status: Unutilized
Reasons: Within 2000 ft. of flammable or explosive material; Secured Area

Bldgs. W0055, W0058
Milan AAP
Gibson TN 38358
Landholding Agency: Army
Property Number: 21200740028
Status: Excess
Reasons: Within 2000 ft. of flammable or explosive material; Secured Area; Extensive deterioration

Bldgs. 101, 118, 143
Holston Army Ammo Plant
Kingsport TN 37660
Landholding Agency: Army
Property Number: 21200740160
Status: Unutilized
Reasons: Within 2000 ft. of flammable or explosive material; Secured Area

Bldg. W005A
Milan AAP
Gibson TN 38358
Landholding Agency: Army
Property Number: 21200840051
Status: Excess
Reasons: Secured Area; Extensive deterioration; Within 2000 ft. of flammable or explosive material

Bldgs. B0268, J0134
Milan AAP
Gibson TN 38358
Landholding Agency: Army
Property Number: 21200920068
Status: Excess
Reasons: Extensive deterioration; Secured Area; Within 2000 ft. of flammable or explosive material

Bldgs. 00001, 00003, 00030
John Sevier Range
Knoxville TN 37918
Landholding Agency: Army
Property Number: 21200930021
Status: Excess
Reasons: Extensive deterioration

Bldgs. ZZ001, ZZ002
Milan AAP
Gibson TN 38358
Landholding Agency: Army
Property Number: 21200940035
Status: Excess
Reasons: Within 2000 ft. of flammable or explosive material; Secured Area

Bldgs. ZZ001, ZZ002
Milan AAP
Milan TN 38358
Landholding Agency: Army
Property Number: 21201020025
Status: Excess
Reasons: Within 2000 ft. of flammable or explosive material; Secured Area; Extensive deterioration

Bldgs. 604, 7851
Fort Campbell
Montgomery TN 42223
Landholding Agency: Army
Property Number: 21201030019
Status: Unutilized
Reasons: Secured Area; Extensive deterioration

9 Bldgs.
Holston Army Ammo Plant
Kingsport TN 37660
Landholding Agency: Army
Property Number: 21201030020
Status: Unutilized
Directions: 6, 8A, 24A, 25A, 40A, 101, 118, 143, 154
Reasons: Within 2000 ft. of flammable or explosive material; Secured Area

9 Bldgs.
Holston Army Ammo Plant
Kingsport TN 37660
Landholding Agency: Army
Property Number: 21201030021
Status: Unutilized
Directions: 249, 252, 253, 254, 255, 256, 302BP, 315, 331
Reasons: Secured Area; Within 2000 ft. of flammable or explosive material

8 Bldgs.
Holston Army Ammo Plant
Kingsport TN 37660
Landholding Agency: Army
Property Number: 21201030022
Status: Unutilized
Directions: 404, 405, 406, 407, 411, 414, 423, 427
Reasons: Secured Area; Within 2000 ft. of flammable or explosive material

9 Bldgs.
Holston Army Ammo Plant
Kingsport TN 37660
Landholding Agency: Army
Property Number: 21201030023
Status: Unutilized
Directions: A–0, B–11, C–3A, F–3, G–1A, M–8, N–10A, O–5, D–6A
Reasons: Within 2000 ft. of flammable or explosive material; Secured Area

11 Bldgs.
Holston Army Ammo Plant
Kingsport TN 37660
Landholding Agency: Army
Property Number: 21201030024
Status: Unutilized
Directions: YM–1, YM–2, YM–3, YM–4, YM–5, YM–6, YM–7, YM–8, YM–9, YM–10, YM–11
Reasons: Within 2000 ft. of flammable or explosive material; Secured Area

9 Bldgs.
Fort Campbell
Montgomery TN 42223
Landholding Agency: Army
Property Number: 21201030050
Status: Unutilized
Directions: 6817, 6818, 6819, 6824, 6847, 6849, 6850, 7005, 7006
Reasons: Extensive deterioration; Secured Area

9 Bldgs.
Fort Campbell
Montgomery TN 42223
Landholding Agency: Army
Property Number: 21201040024
Status: Unutilized
Directions: 6817, 6818, 6819, 6824, 6847, 6849, 6850, 6898, 6899
Reasons: Secured Area

7 Bldgs.
Fort Campbell
Montgomery TN 42223
Landholding Agency: Army
Property Number: 21201040025
Status: Unutilized
Directions: 7005, 7006, 7051, 7202, 7814, 8064, MM001
Reasons: Secured Area

4 Bldgs.
Milan AAP
Gibson TN 38358
Landholding Agency: Army
Property Number: 21201040026
Status: Excess
Directions: W001A, W0062, W0063, W0064
Reasons: Extensive deterioration; Within 2000 ft. of flammable or explosive material; Secured Area

4 Bldgs.
Ft. Campbell
Montgomery TN
Landholding Agency: Army
Property Number: 21201120022
Status: Underutilized
Directions: 753, 02607, 3705, 6602
Reasons: Secured Area; Extensive deterioration

4 Bldgs.
Ft. Campbell
Christian TN
Landholding Agency: Army
Property Number: 21201120023
Status: Excess
Directions: 6932, 6933, 6934, 6935
Reasons: Secured Area

4 Bldgs.

Ft. Campbell
Christian TN
Landholding Agency: Army
Property Number: 21201120024
Status: Excess
Directions: 6936, 6937, 6938, 6939
Reasons: Secured Area

5 Bldgs.
Ft. Campbell
Christian TN
Landholding Agency: Army
Property Number: 21201120025
Status: Excess
Directions: 6940, 6942, 6943, 6944, 6945
Reasons: Secured Area

6 Bldgs.
Ft. Campbell
Christian TN
Landholding Agency: Army
Property Number: 21201120027
Status: Underutilized
Directions: 7180, A6934, B6938, B6990, S6647, T6647
Reasons: Extensive deterioration; Secured Area

Bldg. 00018
2280 Hwy 104 W. Suite 2
Milan TN 38358
Landholding Agency: Army
Property Number: 21201130022
Status: Excess
Reasons: Within 2000 ft. of flammable or explosive material

19 Bldgs.
Fort Campbell
Fort Campbell TN 42223
Landholding Agency: Army
Property Number: 21201130051
Status: Unutilized
Directions: 843, 845, 867, 868, 885, 886, 888, 5115, 6615, 6804, 6808, 6809, 6811, 6812, 6843, 7240, 7574, 08062, E6621
Comments: Reasons for unsuitability vary amoung properties; frome secured area to extensive deterioration
Reasons: Secured Area; Extensive deterioration

Bldgs. 5291 & A1584
Fort Campbell Military Installation
Fort Campbell TN 42223
Landholding Agency: Army
Property Number: 21201140042
Status: Unutilized
Reasons: Secured Area; Extensive deterioration

6 Bldgs.
Fort Campbell Military Installation
Fort Campbell TN 42223
Landholding Agency: Army
Property Number: 21201210075
Status: Unutilized
Directions: 6844, 7502, 7503, 7505, 7606, 7608
Comments: Nat'l security concerns; restricted access and no alternative method of access
Reasons: Secured Area

Texas

Bldg. M–3
Lone Star Army Ammunition Plant
Highway 82 West
Texarkana TX 75505–9100
Landholding Agency: Army
Property Number: 21199012524
Status: Unutilized
Directions:
Comments:
Reasons: Within 2000 ft. of flammable or explosive material; Secured Area

Bldg. C–11
Lone Star Army Ammunition Plant
Highway 82 West
Texarkana TX 75505–9100
Landholding Agency: Army
Property Number: 21199012529
Status: Unutilized
Directions:
Comments:
Reasons: Within 2000 ft. of flammable or explosive material; Secured Area

Bldg. C–10
Lone Star Army Ammunition Plant
Highway 82 West
Texarkana TX 75505–9100
Landholding Agency: Army
Property Number: 21199012533
Status: Unutilized
Directions:
Comments:
Reasons: Secured Area; Within 2000 ft. of flammable or explosive material

Bldg. C–15
Lone Star Army Ammunition Plant
Highway 82 West
Texarkana TX 75505–9100
Landholding Agency: Army
Property Number: 21199012536
Status: Unutilized
Directions:
Comments:
Reasons: Secured Area

Bldg. J–8
Lone Star Army Ammunition Plant
Highway 82 West
Texarkana TX 75505–9100
Landholding Agency: Army
Property Number: 21199012539
Status: Unutilized
Directions:
Comments:
Reasons: Secured Area; Within 2000 ft. of flammable or explosive material

Bldg. J–17
Lone Star Army Ammunition Plant
Highway 82 West
Texarkana TX 75505–9100
Landholding Agency: Army
Property Number: 21199012540
Status: Unutilized
Directions:
Comments:
Reasons: Secured Area; Within 2000 ft. of flammable or explosive material

Bldg. J–21
Lone Star Army Ammunition Plant
Highway 82 West
Texarkana TX 75505–9100
Landholding Agency: Army
Property Number: 21199012542
Status: Unutilized
Directions:
Comments:
Reasons: Within 2000 ft. of flammable or explosive material; Secured Area

Bldg. M–8
Lone Star Army Ammunition Plant
Highway 82 West
Texarkana TX 75505–9100
Landholding Agency: Army
Property Number: 21199012544
Status: Unutilized
Directions:
Comments:
Reasons: Secured Area; Within 2000 ft. of flammable or explosive material

Bldg. M–24
Lone Star Army Ammunition Plant
Highway 82 West
Texarkana TX 75505–9100
Landholding Agency: Army
Property Number: 21199012545
Status: Unutilized
Directions:
Comments:
Reasons: Within 2000 ft. of flammable or explosive material; Secured Area

Bldg C–42
Lone Star Army Ammunition Plant
Highway 82 West
Texarkana TX 75505–9100
Landholding Agency: Army
Property Number: 21199030337
Status: Unutilized
Directions:
Comments:
Reasons: Secured Area; Within 2000 ft. of flammable or explosive material

Bldg. C–6
Lone Star Army Ammunition Plant
Highway 82 West
Texarkana TX 75505–9100
Landholding Agency: Army
Property Number: 21199030338
Status: Unutilized
Directions:
Comments:
Reasons: Within 2000 ft. of flammable or explosive material; Secured Area

Bldg. J–1
Lone Star Army Ammunition Plant
Highway 82 West
Texarkana TX 75505–9100
Landholding Agency: Army
Property Number: 21199030339
Status: Unutilized
Directions:
Comments:
Reasons: Within 2000 ft. of flammable or explosive material; Secured Area

Bldg. J–3
Lone Star Army Ammunition Plant
Highway 82 West
Texarkana TX 75505–9100
Landholding Agency: Army
Property Number: 21199030340
Status: Unutilized
Directions:
Comments:
Reasons: Secured Area; Within 2000 ft. of flammable or explosive material

Bldg. J–6
Lone Star Army Ammunition Plant
Highway 82 West
Texarkana TX 75505–9100
Landholding Agency: Army
Property Number: 21199030341
Status: Unutilized
Directions:
Comments:
Reasons: Secured Area; Within 2000 ft. of flammable or explosive material

Bldg. J–7
Lone Star Army Ammunition Plant
Highway 82 West
Texarkana TX 75505–9100

Landholding Agency: Army
Property Number: 21199030342
Status: Unutilized
Directions:
Comments:
Reasons: Within 2000 ft. of flammable or explosive material; Secured Area

Bldg. M–1
Lone Star Army Ammunition Plant
Highway 82 West
Texarkana TX 75505–9100
Landholding Agency: Army
Property Number: 21199030343
Status: Unutilized
Directions:
Comments:
Reasons: Within 2000 ft. of flammable or explosive material; Secured Area

Bldg. M–6
Lone Star Army Ammunition Plant
Highway 82 West
Texarkana TX 75505–9100
Landholding Agency: Army
Property Number: 21199030344
Status: Unutilized
Directions:
Comments:
Reasons: Within 2000 ft. of flammable or explosive material; Secured Area

Bldg. M–7
Lone Star Army Ammunition Plant
Highway 82 West
Texarkana TX 75505–9100
Landholding Agency: Army
Property Number: 21199030345
Status: Unutilized
Directions:
Comments:
Reasons: Secured Area; Within 2000 ft. of flammable or explosive material

Bldg. 450
Red River Army Depot
Texarkana TX 75507–5000
Landholding Agency: Army
Property Number: 21199420315
Status: Unutilized
Directions:
Comments:
Reasons: Secured Area; Extensive deterioration

Bldg. 532
Red River Army Depot
Texarkana TX 75507–5000
Landholding Agency: Army
Property Number: 21199420322
Status: Unutilized
Directions:
Comments:
Reasons: Extensive deterioration; Secured Area

Bldg. 586
Red River Army Depot
Texarkana TX 75507–5000
Landholding Agency: Army
Property Number: 21199420325
Status: Unutilized
Directions:
Comments:
Reasons: Extensive deterioration; Secured Area

Bldg. 673
Red River Army Depot
Texarkana TX 75507–5000
Landholding Agency: Army
Property Number: 21199420327
Status: Unutilized
Directions:
Comments:
Reasons: Secured Area; Extensive deterioration

Bldg. 1ST–1
Longhorn Army Ammunition Plant
Karnack TX 75671
Landholding Agency: Army
Property Number: 21199620827
Status: Unutilized
Directions:
Comments:
Reasons: Secured Area; Within 2000 ft. of flammable or explosive material

Bldg. 1250
Fort Bliss
El Paso TX 79916
Landholding Agency: Army
Property Number: 21199730163
Status: Unutilized
Directions:
Comments:
Reasons: Extensive deterioration

Bldg. 3156
Fort Bliss
El Paso TX 79916
Landholding Agency: Army
Property Number: 21199830171
Status: Unutilized
Directions:
Comments:
Reasons: Extensive deterioration

Bldg. 7000
Fort Bliss
El Paso TX 79916
Landholding Agency: Army
Property Number: 21199830182
Status: Unutilized
Directions:
Comments:
Reasons: Extensive deterioration

Bldgs. 7124
Fort Bliss
El Paso TX 79916
Landholding Agency: Army
Property Number: 21199830185
Status: Unutilized
Directions:
Comments:
Reasons: Extensive deterioration

Bldgs. 7139
Fort Bliss
El Paso TX 79916
Landholding Agency: Army
Property Number: 21199830186
Status: Unutilized
Directions:
Comments:
Reasons: Extensive deterioration

Bldgs. 7151, 7154, 7157–7159
Fort Bliss
El Paso TX 79916
Landholding Agency: Army
Property Number: 21199830187
Status: Unutilized
Directions:
Comments:
Reasons: Extensive deterioration

Bldgs. 7175–7177
Fort Bliss
El Paso TX 79916
Landholding Agency: Army
Property Number: 21199830189
Status: Unutilized
Directions:
Comments:
Reasons: Extensive deterioration

Bldgs. 9901
Fort Bliss
El Paso TX 79916
Landholding Agency: Army
Property Number: 21200320079
Status: Unutilized
GSA Number:
Reasons: Extensive deterioration

Bldgs. YAREA
Longhorn Army Ammo Plant
Kamack TX 75661
Landholding Agency: Army
Property Number: 21200340062
Status: Excess
GSA Number:
Directions: 0003Y, 0004Y, 004Y2, 0013Y, 0016Y, 16Y1, 16Y2, 0018Y, 018Y1 0029Y, 0032Y, 0034Y, 0038Y, 0040Y, 0045Y
Reasons: Secured Area

Bldgs. P–3X, 3X–4 of 5
Longhorn Army Ammo Plant
Karnack TX 75661
Landholding Agency: Army
Property Number: 21200340063
Status: Excess
GSA Number:
Directions: 00P10, 00P11, 0046A, 0049B, 0053B, 0054B, 0055B, 0056B, 0059B, 0060B 0068F, 0026E, 0032E, 0029D
Reasons: Secured Area

Bldgs. P–3X, 3X–3 of 5
Longhorn Army Ammo Plant
Karnack TX 75661
Landholding Agency: Army
Property Number: 21200340064
Status: Excess
GSA Number:
Directions: 00S13, 00P13, 00B10, 00B16, SHEDC, 00B15, 00B13, 00B11, 000B9, 000B7, SHEDJ, SHEDD, 000M4, 000P3, 000P1
Reasons: Secured Area

Bldgs. P–3X 5 of 5
Longhorn Army Ammo Plant
Karnack TX 75661
Landholding Agency: Army
Property Number: 21200340065
Status: Excess
GSA Number:
Directions: 0025D, 0025C, 0050G, 0054F, 0053D, 0054G, 0031G, 00403, 00406, 00408, 00409, 0016T, 0020T, 0035T, 0036T, 036T1
Reasons: Secured Area

Bldgs. Inert SH1 of 3
Longhorn Army Ammo Plant
Karnack TX 75661
Landholding Agency: Army
Property Number: 21200340066
Status: Excess
GSA Number:
Directions: 00101, 00102, 0102R, 00103, 000L6, 00402, 000L5, SHEDL, SHEDB, 0061I, 0060I, 0022B, 0032B, 0029A, 0031A
Reasons: Secured Area

Bldgs. Inert SH3 of 3
Longhorn Army Ammo Plant
Karnack TX 75661
Landholding Agency: Army
Property Number: 21200340067
Status: Excess

GSA Number:
Directions: 016T1, 020T1, 0034T, 034T1, 0020X, 022X1
Reasons: Secured Area

Bldgs. SH2 of 3
Longhorn Army Ammo Plant
Karnack TX 75661
Landholding Agency: Army
Property Number: 21200340068
Status: Excess
GSA Number:
Directions: 068G1, 068F1, 0022B, 0032B, 054F1, 0040H, 00402, 00404, 00405, 0018G, 0015G, 0009G, 0010G, 0011G
Reasons: Secured Area

Bldgs. Inert
Longhorn Army Ammo Plant
Karnack TX 75661
Landholding Agency: Army
Property Number: 21200340069
Status: Excess
GSA Number:
Directions: 00703, 0703A, 0703C, 0707E, 0018K, 01ST1, 0201A, 00202, 00204, 0022G, 0025G, 0031W, 0049W, 0501E, 510B2, 0601B, 018K1
Reasons: Secured Area

Bldgs. SHOPS
Longhorn Army Ammo Plant
Karnack TX 75661
Landholding Agency: Army
Property Number: 21200340070
Status: Excess
GSA Number:
Directions: 00723, 0722P, 0704D, 00715, 00744, 0722G
Reasons: Secured Area

Bldgs. Magaz
Longhorn Army Ammo Plant
Karnack TX 75661
Landholding Agency: Army
Property Number: 21200340071
Status: Excess
GSA Number:
Directions: 08111, 08117, 81110, 81111, 81112, 81113, 81114 81117, 81118, 81121, 81122, 81124, 81128, 81141, 81143, 81156
Reasons: Secured Area

Bldgs. P–3X SHT 1 of 5
Longhorn Army Ammo Plant
Karnack TX 75661
Landholding Agency: Army
Property Number: 21200340072
Status: Excess
GSA Number:
Directions: 02121 thru 21211, 21214 thru 21221, 21223, 21225, 21227, 21231D thru 21240, 21242, 21244, 21246, 21248
Reasons: Secured Area

Bldgs. P–3X SHT 2 of 5
Longhorn Army Ammo Plant
Karnack TX 75661
Landholding Agency: Army
Property Number: 21200340073
Status: Excess
GSA Number:
Directions: 21250 thru 21257, 21259, 0027X, 0022X, 0035X
Reasons: Secured Area

Bldgs. 56208, 56220
Fort Hood
Ft. Hood TX 76544
Landholding Agency: Army
Property Number: 21200420146
Status: Unutilized
Reasons: Extensive deterioration

Bldgs. 05110, 06088
Fort Sam Houston
Camp Bullis TX
Landholding Agency: Army
Property Number: 21200520063
Status: Excess
Reasons: Extensive deterioration

Bldgs. 7122, 7125
Fort Bliss
El Paso TX 79916
Landholding Agency: Army
Property Number: 21200540070
Status: Unutilized
Reasons: Extensive deterioration

Bldg. 7136
Fort Bliss
El Paso TX 79916
Landholding Agency: Army
Property Number: 21200540071
Status: Unutilized
Reasons: Extensive deterioration

Bldg. D5040
Grand Prairie Reserve Complex
Tarrant TX 75051
Landholding Agency: Army
Property Number: 21200620045
Status: Unutilized
Reasons: Secured Area; Extensive deterioration

Bldgs. 1177, 1178, 1179
Fort Bliss
El Paso TX 79916
Landholding Agency: Army
Property Number: 21200640073
Status: Unutilized
Reasons: Extensive deterioration

Bldgs. 199, 1271, 11306
Fort Bliss
El Paso TX 79916
Landholding Agency: Army
Property Number: 21200710036
Status: Unutilized
Reasons: Secured Area

Bldgs. 56226, 56228
Fort Hood
Bell TX 76544
Landholding Agency: Army
Property Number: 21200720109
Status: Excess
Reasons: Extensive deterioration

Bldg. 1235
Fort Bliss
El Paso TX 79916
Landholding Agency: Army
Property Number: 21200740030
Status: Unutilized
Reasons: Secured Area; Extensive deterioration

Bldg. 00002
Denton
Lewisville TX 76102
Landholding Agency: Army
Property Number: 21200810034
Status: Unutilized
Reasons: Extensive deterioration

9 Bldgs.
Fort Bliss
El Paso TX 79916
Landholding Agency: Army
Property Number: 21200820013
Status: Excess
Directions: 1610, 1680, 2322, 2323, 2332, 2333, 2343, 2353, 3191
Reasons: Secured Area

Bldg. 08017
Fort Worth
Tarrant TX 76108
Landholding Agency: Army
Property Number: 21200830028
Status: Unutilized
Reasons: Secured Area; Extensive deterioration

9 Bldgs.
Fort Worth
Tarrant TX 76108
Landholding Agency: Army
Property Number: 21200830029
Status: Unutilized
Directions: 8501, 8504, 8505, 8506, 8507, 8508, 8509, 8511, 8514
Reasons: Extensive deterioration; Secured Area

Bldgs. 617, 619, 889, 890
Fort Bliss
El Paso TX
Landholding Agency: Army
Property Number: 21200830030
Status: Unutilized
Reasons: Extensive deterioration

4 Bldgs.
Fort Bliss
El Paso TX 79916
Landholding Agency: Army
Property Number: 21200830039
Status: Unutilized
Directions: 11411, 11530, 11540, 11550
Reasons: Extensive deterioration

Bldg. 5817
Fort Bliss
El Paso TX 79916
Landholding Agency: Army
Property Number: 21200920071
Status: Unutilized
Reasons: Extensive deterioration

Bldgs. 9550, 9557, 9558, 11301
Fort Bliss
El Paso TX 79916
Landholding Agency: Army
Property Number: 21200930025
Status: Unutilized
Reasons: Extensive deterioration

Bldg. 03826
Fort Sam Houston
San Antonio TX 78234
Landholding Agency: Army
Property Number: 21200930026
Status: Underutilized
Reasons: Secured Area

Bldgs. 11284, 11304
Fort Bliss
El Paso TX 79916
Landholding Agency: Army
Property Number: 21200940036
Status: Unutilized
Reasons: Secured Area

Bldg. 25
Brownwood
Brown TX 76801
Landholding Agency: Army
Property Number: 21201020033
Status: Unutilized
Reasons: Extensive deterioration

Bldgs. 4256, 4257, and 4258
Ft. Hood
Bell TX
Landholding Agency: Army
Property Number: 21201120028

Status: Excess
Reasons: Secured Area

4 Bldgs.
Ft. Hood
Bell TX
Landholding Agency: Army
Property Number: 21201120029
Status: Excess
Directions: 4265, 4266, 4267, 4268
Reasons: Secured Area

Bldgs. 57012 and 57013
Ft. Hood
Coryell TX
Landholding Agency: Army
Property Number: 21201120030
Status: Excess
Reasons: Secured Area; Extensive deterioration

Bldg. 00046
Ft. Bliss
El Paso TX
Landholding Agency: Army
Property Number: 21201120056
Status: Unutilized
Reasons: Extensive deterioration

6 Bldgs.
Ft. Bliss
El Paso TX
Landholding Agency: Army
Property Number: 21201120059
Status: Unutilized
Directions: 07180, 07184, 07186, 07188, 07190, 07192
Reasons: Extensive deterioration

7 Bldgs
Red River Army Depot
Texarkana TX 75507
Landholding Agency: Army
Property Number: 21201130052
Status: Excess
Directions: 00122, 00450, 00457, 00458, 00475, 00502, 00545
Reasons: Extensive deterioration; Secured Area

Bldgs. 04282 & 04287
Tank Destroyer Blvd. & 80th St.
Fort Hood TX 76544
Landholding Agency: Army
Property Number: 21201130066
Status: Unutilized
Reasons: Secured Area

Bldg 1674
42nd & Old Ironsides
Fort Hood TX 76544
Landholding Agency: Army
Property Number: 21201140065
Status: Excess
Reasons: Contamination; Secured Area

Bldg 04920
Santa Fe Ave & Clear Creek Road
Fort Hood TX 76544
Landholding Agency: Army
Property Number: 21201140067
Status: Unutilized
Reasons: Secured Area; Contamination

Utah

Bldg. 9307
Pugway Proving Ground
Dugway UT 84022
Landholding Agency: Army
Property Number: 21199013997
Status: Underutilized
Directions: North of Stark Road on V Grid Access Road
Comments:
Reasons: Secured Area

Bldg. 5145
Deseret Chemical Depot
Tooele UT 84074
Landholding Agency: Army
Property Number: 21199820120
Status: Unutilized
Directions:
Comments:
Reasons: Extensive deterioration; Secured Area

Bldg. 8030
Deseret Chemical Depot
Tooele UT 84074
Landholding Agency: Army
Property Number: 21199820121
Status: Unutilized
Directions:
Comments:
Reasons: Extensive deterioration; Secured Area

Bldgs. 00259, 00260
Ogden Maintenance Center
Weber UT 84404
Landholding Agency: Army
Property Number: 21200530066
Status: Excess
Reasons: Secured Area

Bldgs. 04546, 04550
Deseret Chemical Depot
Stockton UT 84071
Landholding Agency: Army
Property Number: 21200610034
Status: Excess
Reasons: Extensive deterioration

Bldg. 03300
Deseret Chemical Depot
Stockton UT 84071
Landholding Agency: Army
Property Number: 21200720036
Status: Excess
Comments: Bldg.03312 was demolished 04/12/2012.
Reasons: Secured Area

Bldg. 5126
Deseret Chemical Depot
Stockton UT
Landholding Agency: Army
Property Number: 21200820075
Status: Excess
Comments: Bldg. 4535 was demolished 04/12/2012
Reasons: Secured Area

10 Bldgs.
Deseret Chemical Depot
Stockton UT 84071
Landholding Agency: Army
Property Number: 21201030029
Status: Excess
Directions: 5003, 6000, 6009, 6011, 6013, 6039, 6057, 7100, 9110, 9111
Reasons: Secured Area

Bldgs. 222 thru 227
MTA-L Camp Williams
Eagle Mountain UT 84005
Landholding Agency: Army
Property Number: 21201040028
Status: Unutilized
Reasons: Extensive deterioration; Secured Area; Within 2000 ft. of flammable or explosive material

Bldg. 4535
Deseret Chemical Depot
Stockton UT 84071
Landholding Agency: Army
Property Number: 21201040029
Status: Excess
Reasons: Secured Area

Bldgs. 04153 and 04180
Camp Williams Trng. Ctr.
Riverton UT 84065
Landholding Agency: Army
Property Number: 21201110025
Status: Unutilized
Reasons: Extensive deterioration

10 Bldgs.
Camp Williams Training Site
Camp Williams Road
Riverton UT 84065
Landholding Agency: Army
Property Number: 21201110042
Status: Unutilized
Directions: Bldgs: 03090, 03091, 03093, 03095, 03097, 03110, 03111, 03112, 03113, 03117
Reasons: Extensive deterioration; Within 2000 ft. of flammable or explosive material

16 Bldgs.
Green River Test Complex
Green River UT 84525
Landholding Agency: Army
Property Number: 21201210043
Status: Unutilized
Directions: 50101, 50102, 50106, 50108, 50109, 50130, 50131, 50133, 50210, 50253, 50291, 50308, 50331, 50400
Comments: Nat'l security concerns; no public access and no alternative method to gain access
Reasons: Secured Area

14 Bldgs.
Green River Test Complex
Green River UT 84525
Landholding Agency: Army
Property Number: 21201210044
Status: Unutilized
Directions: 50001, 50002, 50003, 50006, 50019, 50020, 50022, 50024, 50027, 50029, 50031, 50032, 50040, 50043
Comments: Nat'l security concerns; no public access and no alternative method to gain access
Reasons: Secured Area

2 Bldgs.
Green River Test Complex
Green River UT 84525
Landholding Agency: Army
Property Number: 21201210096
Status: Unutilized
Directions: 50105, 50207
Comments: Nat'l security concerns; no public access and no alternative method to gain access
Reasons: Secured Area

Vermont

FHTMG
113 Ethan Allen Rd.
Jericho VT 05465
Landholding Agency: Army
Property Number: 21201230007
Status: Unutilized
Comments: Public access denied & no alternative method to gain access w/out comprising nat'l security; documented deficiencies: structural weakness—facility is tilted & falling off of foundation
Reasons: Extensive deterioration; Secured Area

Virginia

Bldg. 4327–07 Warehouse
Radford Army Ammunition Plant
Radford VA 24141
Landholding Agency: Army
Property Number: 21199010833
Status: Unutilized
Directions: State Highway 114
Comments:
Reasons: Secured Area; Within 2000 ft. of flammable or explosive material

Bldg. 4339–03
Radford Army Ammunition Plant
Latrine
Radford VA 24141
Landholding Agency: Army
Property Number: 21199010834
Status: Unutilized
Directions: State Highway 114
Comments:
Reasons: Secured Area; Other—Latrine, detached structure; Within 2000 ft. of flammable or explosive material

Bldgs. 4339–23
Radford Army Ammunition Plant
Latrine
Radford VA 24141
Landholding Agency: Army
Property Number: 21199010835
Status: Unutilized
Directions: State Highway 114
Comments:
Reasons: Other—Latrine, detached structure; Within 2000 ft. of flammable or explosive material; Secured Area

Bldg. 3012, Nitrating House
Radford Army Ammunition Plant
Radford VA 24141
Landholding Agency: Army
Property Number: 21199010836
Status: Unutilized
Directions: State Highway 114
Comments:
Reasons: Within 2000 ft. of flammable or explosive material; Secured Area

Bldg. 4339–02
Radford Army Ammunition Plant
Radford VA 24141
Landholding Agency: Army
Property Number: 21199010837
Status: Underutilized
Directions: State Highway 114
Comments:
Reasons: Secured Area; Within 2000 ft. of flammable or explosive material; Other—Latrine, detached structure

Bldg. 4339–10
Radford Army Ammunition Plant
Latrine
Radford VA 24141
Landholding Agency: Army
Property Number: 21199010838
Status: Unutilized
Directions: State Highway 114
Comments:
Reasons: Within 2000 ft. of flammable or explosive material; Secured Area; Other—Latrine, detached structure

Bldg. 4339–11
Radford Army Ammunition Plant
Latrine
Radford VA 24141
Landholding Agency: Army
Property Number: 21199010840
Status: Unutilized
Directions:
State Highway 114
Comments:
Reasons: Within 2000 ft. of flammable or explosive material; Other—Latrine, detached structure; Secured Area

Bldg. 4339–24
Radford Army Ammunition Plant
Latrine
Radford VA 24141
Landholding Agency: Army
Property Number: 21199010841
Status: Unutilized
Directions:
State Highway 114
Comments:
Reasons: Secured Area; Within 2000 ft. of flammable or explosive material; Other—Latrine, detached structure

Bldg. 3507
Radford Army Ammunition Plant
Thermal Dehy
Radford VA 24141
Landholding Agency: Army
Property Number: 21199010842
Status: Unutilized
Directions: State Highway 114
Comments:
Reasons: Within 2000 ft. of flammable or explosive material; Secured Area

Bldg. 4710–01
Radford Army Ammunition Plant
Latrine
Radford VA 24141
Landholding Agency: Army
Property Number: 21199010843
Status: Unutilized
Directions: State Highway 114
Comments:
Reasons: Secured Area; Within 2000 ft. of flammable or explosive material; Other—Latrine, detached structure

Bldg. 3511–00
Radford Army Ammunition Plant
Blocker Press
Radford VA 24141
Landholding Agency: Army
Property Number: 21199010844
Status: Unutilized
Directions: State Highway 114
Comments:
Reasons: Within 2000 ft. of flammable or explosive material; Secured Area

Bldg. 4710–02
Radford Army Ammunition Plant
Latrine
Radford VA 24141
Landholding Agency: Army
Property Number: 21199010845
Status: Unutilized
Directions: State Highway 114
Comments:
Reasons: Within 2000 ft. of flammable or explosive material; Other—Latrine, detached structure; Secured Area

Bldg. 4710–05
Radford Army Ammunition Plant
Latrine
Radford VA 24141
Landholding Agency: Army
Property Number: 21199010846
Status: Unutilized
Directions: State Highway 114
Comments:
Reasons: Secured Area; Other—Latrine, detached structure; Within 2000 ft. of flammable or explosive material

Bldg. 3512–00
Radford Army Ammunition Plant
Block Press House
Radford VA 24141
Landholding Agency: Army
Property Number: 21199010847
Status: Unutilized
Directions: State Highway 114
Comments:
Reasons: Secured Area; Within 2000 ft. of flammable or explosive material

Bldg. 4343–00
Radford Army Ammunition Plant
Codmium Plating House
Radford VA 24141
Landholding Agency: Army
Property Number: 21199010848
Status: Unutilized
Directions: State Highway 114
Comments:
Reasons: Secured Area; Within 2000 ft. of flammable or explosive material

Bldg. 4901–00
Radford Army Ammunition Plant
Block Press House
Radford VA 24141
Landholding Agency: Army
Property Number: 21199010849
Status: Unutilized
Directions: State Highway 114
Comments:
Reasons: Within 2000 ft. of flammable or explosive material; Secured Area

Bldg. 3553–00, A–1
Radford Army Ammunition Plant
Press Cutting House
Radford VA 24141
Landholding Agency: Army
Property Number: 21199010851
Status: Unutilized
Directions: State Highway 114
Comments:
Reasons: Secured Area; Within 2000 ft. of flammable or explosive material

Bldg. 4905–00
Radford Army Ammunition Plant
Control House
Radford VA 24141
Landholding Agency: Army
Property Number: 21199010852
Status: Unutilized
Directions: State Highway 114
Comments:
Reasons: Secured Area; Within 2000 ft. of flammable or explosive material

Bldg. 4909–01
Radford Army Ammunition Plant
Solvent Recovery House
Radford VA 24141
Landholding Agency: Army
Property Number: 21199010853
Status: Unutilized
Directions: State Highway 114
Comments:
Reasons: Secured Area; Within 2000 ft. of flammable or explosive material

Bldg. 4909–02
Radford Army Ammunition Plant
Solvent Recovery House
Radford VA 24141
Landholding Agency: Army
Property Number: 21199010854

Status: Unutilized
Directions: State Highway 114
Comments:
Reasons: Within 2000 ft. of flammable or explosive material; Secured Area

Bldg. 3649–00
Radford Army Ammunition Plant
Premix House No. 3
Radford VA 24141
Landholding Agency: Army
Property Number: 21199010855
Status: Unutilized
Directions: State Highway 114
Comments:
Reasons: Within 2000 ft. of flammable or explosive material; Secured Area

Bldg. 4909–03
Radford Army Ammunition Plant
Solvent Recovery House
Radford VA 24141
Landholding Agency: Army
Property Number: 21199010856
Status: Unutilized
Directions: State Highway 114
Comments:
Reasons: Secured Area; Within 2000 ft. of flammable or explosive material

Bldg. 4909–04
Radford Army Ammunition Plant
Solvent Recovery House
Radford VA 24141
Landholding Agency: Army
Property Number: 21199010857
Status: Unutilized
Directions: State Highway 114
Comments:
Reasons: Secured Area; Within 2000 ft. of flammable or explosive material

Bldg. 4909–05
Radford Army Ammunition Plant
Solvent Recovery House
Radford VA 24141
Landholding Agency: Army
Property Number: 21199010858
Status: Unutilized
Directions: State Highway 114
Comments:
Reasons: Within 2000 ft. of flammable or explosive material; Secured Area

Bldg. 3662–00
Radford Army Ammunition Plant
Screen Storehouse
Radford VA 24141
Landholding Agency: Army
Property Number: 21199010859
Status: Unutilized
Directions: State Highway 114
Comments:
Reasons: Within 2000 ft. of flammable or explosive material; Secured Area

Bldg. 4910–01
Radford Army Ammunition Plant
Water Dry House
Radford VA 24141
Landholding Agency: Army
Property Number: 21199010860
Status: Unutilized
Directions: State Highway 114
Comments:
Reasons: Within 2000 ft. of flammable or explosive material; Secured Area

Bldg. 4910–02
Radford Army Ammunition Plant
Water Dry House
Radford VA 24141
Landholding Agency: Army
Property Number: 21199010861
Status: Unutilized
Directions: State Highway 114
Comments:
Reasons: Secured Area; Within 2000 ft. of flammable or explosive material

Bldg. 4910–03
Radford Army Ammunition Plant
Water Dry House
Radford VA 24141
Landholding Agency: Army
Property Number: 21199010862
Status: Unutilized
Directions: State Highway 114
Comments:
Reasons: Within 2000 ft. of flammable or explosive material; Secured Area

Bldg. 3670–00
Radford Army Ammunition Plant
Perchlorate Grind House
Radford VA 24141
Landholding Agency: Army
Property Number: 21199010863
Status: Unutilized
Directions: State Highway 114
Comments:
Reasons: Within 2000 ft. of flammable or explosive material; Secured Area

Bldg. 4910–04
Radford Army Ammunition Plant
Water Dry House
Radford VA 24141
Landholding Agency: Army
Property Number: 21199010864
Status: Unutilized
Directions: State Highway 114
Comments:
Reasons: Within 2000 ft. of flammable or explosive material; Secured Area

Bldg. 4910–05
Radford Army Ammunition Plant
Water Dry House
Radford VA 24141
Landholding Agency: Army
Property Number: 21199010865
Status: Unutilized
Directions: State Highway 114
Comments:
Reasons: Secured Area; Within 2000 ft. of flammable or explosive material

Bldg. 3672–00
Radford Army Ammunition Plant
Perchlorate Grind House
Radford VA 24141
Landholding Agency: Army
Property Number: 21199010866
Status: Unutilized
Directions: State Highway 114
Comments:
Reasons: Secured Area; Within 2000 ft. of flammable or explosive material

Bldg. 3675–00
Radford Army Ammunition Plant
Air Dry House
Radford VA 24141
Landholding Agency: Army
Property Number: 21199010867
Status: Unutilized
Directions: State Highway 114
Comments:
Reasons: Within 2000 ft. of flammable or explosive material; Secured Area

Bldg. 4911–02
Radford Army Ammunition Plant
Air Dry House
Radford VA 24141
Landholding Agency: Army
Property Number: 21199010868
Status: Unutilized
Directions: State Highway 114
Comments:
Reasons: Within 2000 ft. of flammable or explosive material; Secured Area

Bldg. 4912–05
Radford Army Ammunition Plant
Waste Powder and Solvent Storage
Radford VA 24141
Landholding Agency: Army
Property Number: 21199010869
Status: Unutilized
Directions: State Highway 114
Comments:
Reasons: Within 2000 ft. of flammable or explosive material; Secured Area

Bldg. 3676–00
Radford Army Ammunition Plant
C–7 Mix House
Radford VA 24141
Landholding Agency: Army
Property Number: 21199010870
Status: Unutilized
Directions: State Highway 114
Comments:
Reasons: Secured Area; Within 2000 ft. of flammable or explosive material

Bldg. 4913–00
Radford Army Ammunition Plant
Large Grain Disassembly House
Radford VA 24141
Landholding Agency: Army
Property Number: 21199010871
Status: Unutilized
Directions: State Highway 114
Comments:
Reasons: Within 2000 ft. of flammable or explosive material; Secured Area

Bldg. 3678–00
Radford Army Ammunition Plant
Air Dry House
Radford VA 24141
Landholding Agency: Army
Property Number: 21199010872
Status: Unutilized
Directions: State Highway 114
Comments:
Reasons: Within 2000 ft. of flammable or explosive material; Secured Area

Bldg. 4933–00
Radford Army Ammunition Plant
Filter House
Radford VA 24141
Landholding Agency: Army
Property Number: 21199010874
Status: Unutilized
Directions: State Highway 114
Comments:
Reasons: Secured Area; Within 2000 ft. of flammable or explosive material

Bldg. 3688
Radford Army Ammunition Plant
Control House
Radford VA 24141
Landholding Agency: Army
Property Number: 21199010875
Status: Unutilized
Directions: State Highway 114
Comments:
Reasons: Secured Area; Within 2000 ft. of flammable or explosive material

Bldg. 4935–00
Radford Army Ammunition Plant
Chilled Water Refrigeration
Radford VA 24141
Landholding Agency: Army
Property Number: 21199010876
Status: Unutilized
Directions: State Highway 114
Comments:
Reasons: Secured Area; Within 2000 ft. of flammable or explosive material

Bldg. 4945–02
Radford Army Ammunition Plant
Coating House
Radford VA 24141
Landholding Agency: Army
Property Number: 21199010877
Status: Unutilized
Directions: State Highway 114
Comments:
Reasons: Within 2000 ft. of flammable or explosive material; Secured Area

Bldg. 3702–00
Radford Army Ammunition Plant
Chemical Grind House
Radford VA 24141
Landholding Agency: Army
Property Number: 21199010878
Status: Unutilized
Directions: State Highway 114
Comments:
Reasons: Within 2000 ft. of flammable or explosive material; Secured Area

Bldg. 4952–00
Radford Army Ammunition Plant
Beaker Wrap House
Radford VA 24141
Landholding Agency: Army
Property Number: 21199010879
Status: Unutilized
Directions: State Highway 114
Comments:
Reasons: Secured Area; Within 2000 ft. of flammable or explosive material

Bldg. 3706–00
Radford Army Ammunition Plant
Pre-Mix Rest House
Radford VA 24141
Landholding Agency: Army
Property Number: 21199010880
Status: Unutilized
Directions: State Highway 114
Comments:
Reasons: Secured Area; Within 2000 ft. of flammable or explosive material

Bldg. 3723–00
Radford Army Ammunition Plant
Nibbling House
Radford VA 24141
Landholding Agency: Army
Property Number: 21199010881
Status: Unutilized
Directions: State Highway 114
Comments:
Reasons: Within 2000 ft. of flammable or explosive material; Secured Area

Bldg. 3742–00
Radford Army Ammunition Plant
Catch Tank House
Radford VA 24141
Landholding Agency: Army
Property Number: 21199010882
Status: Unutilized
Directions: State Highway 114
Comments:
Reasons: Within 2000 ft. of flammable or explosive material; Secured Area

Bldg. 3743–00
Radford Army Ammunition Plant
Weigh House No. 1
Radford VA 24141
Landholding Agency: Army
Property Number: 21199010883
Status: Unutilized
Directions: State Highway 114
Comments:
Reasons: Secured Area; Within 2000 ft. of flammable or explosive material

Bldg. 5501–00
Radford Army Ammunition Plant
Finishing Bldg.
Radford VA 24141
Landholding Agency: Army
Property Number: 21199010884
Status: Unutilized
Directions: State Highway 114
Comments:
Reasons: Secured Area; Within 2000 ft. of flammable or explosive material

Bldg. 5502–00
Radford Army Ammunition Plant
Waste Water Treatment Plant
Radford VA 24141
Landholding Agency: Army
Property Number: 21199010885
Status: Unutilized
Directions: State Highway 114
Comments:
Reasons: Within 2000 ft. of flammable or explosive material; Secured Area

Bldg. 7112–01
Radford Army Ammunition Plant
Increment House
Radford VA 24141
Landholding Agency: Army
Property Number: 21199010886
Status: Unutilized
Directions: State Highway 114
Comments:
Reasons: Within 2000 ft. of flammable or explosive material; Secured Area

Bldg. 5500–00
Radford Army Ammunition Plant
Manufacturing Bldg.
Radford VA 24141
Landholding Agency: Army
Property Number: 21199010887
Status: Unutilized
Directions: State Highway 114
Comments:
Reasons: Within 2000 ft. of flammable or explosive material; Secured Area

Bldg. 7124–02
Radford Army Ammunition Plant
Nibbling House
Radford VA 24141
Landholding Agency: Army
Property Number: 21199010888
Status: Unutilized
Directions: State Highway 114
Comments:
Reasons: Secured Area; Within 2000 ft. of flammable or explosive material

Bldg. 7126–00
Radford Army Ammunition Plant
Halfway House
Radford VA 24141
Landholding Agency: Army
Property Number: 21199010889
Status: Unutilized
Directions: State Highway 114
Comments:
Reasons: Secured Area; Within 2000 ft. of flammable or explosive material

Bldg. 7160–00
Radford Army Ammunition Plant
Area Maintenance Office
Radford VA 24141
Landholding Agency: Army
Property Number: 21199010890
Status: Unutilized
Directions: State Highway 114
Comments:
Reasons: Secured Area; Within 2000 ft. of flammable or explosive material

Bldg. 7223–01
Radford Army Ammunition Plant
Latrine and Utility House
Radford VA 24141
Landholding Agency: Army
Property Number: 21199010891
Status: Unutilized
Directions: State Highway 114
Comments:
Reasons: Secured Area; Within 2000 ft. of flammable or explosive material; Other—Latrine, detached Structure

Bldg. 7800–00
Radford Army Ammunition Plant
Extruded Grain Finishing House
Radford VA 24141
Landholding Agency: Army
Property Number: 21199010892
Status: Unutilized
Directions: State Highway 114
Comments:
Reasons: Secured Area; Within 2000 ft. of flammable or explosive material

Bldg. 7806–00
Radford Army Ammunition Plant
Latrine and Utility House
Radford VA 24141
Landholding Agency: Army
Property Number: 21199010893
Status: Unutilized
Directions: State Highway 114
Comments:
Reasons: Within 2000 ft. of flammable or explosive material; Secured Area

Bldg. 9203–00
Radford Army Ammunition Plant
Solvent Preparation Bldg.
Radford VA 24141
Landholding Agency: Army
Property Number: 21199010894
Status: Unutilized
Directions: State Highway 114
Comments:
Reasons: Within 2000 ft. of flammable or explosive material; Secured Area

Bldg. 9205
Radford Army Ammunition Plant
Green Line Complex
Radford VA 24141
Landholding Agency: Army
Property Number: 21199010895
Status: Unutilized
Directions: State Highway 114
Comments:
Reasons: Within 2000 ft. of flammable or explosive material; Secured Area

Bldg. 9209
Radford Army Ammunition Plant
Traying Bldg.
Radford VA 24141

Landholding Agency: Army
Property Number: 21199010896
Status: Unutilized
Directions: State Highway 114
Comments:
Reasons: Secured Area; Within 2000 ft. of flammable or explosive material

Bldg. 9210
Radford Army Ammunition Plant
Traying Bldg.
Radford VA 24141
Landholding Agency: Army
Property Number: 21199010897
Status: Unutilized
Directions: State Highway 114
Comments:
Reasons: Secured Area; Within 2000 ft. of flammable or explosive material

Bldg. 9211
Radford Army Ammunition Plant
Traying Bldg.
Radford VA 24141
Landholding Agency: Army
Property Number: 21199010898
Status: Unutilized
Directions: State Highway 114
Comments:
Reasons: Within 2000 ft. of flammable or explosive material; Secured Area

Bldg. 9206
Radford Army Ammunition Plant
Green Line Complex
Radford VA 24141
Landholding Agency: Army
Property Number: 21199010899
Status: Unutilized
Directions: State Highway 114
Comments:
Reasons: Secured Area; Within 2000 ft. of flammable or explosive material

Bldg. 9207
Radford Army Ammunition Plant
Green Line Complex
Radford VA 24141
Landholding Agency: Army
Property Number: 21199010900
Status: Unutilized
Directions: State Highway 114
Comments:
Reasons: Within 2000 ft. of flammable or explosive material; Secured Area

Bldg. 9310–01
Radford Army Ammunition Plant
Rolled Powder Bldg.
Radford VA 24141
Landholding Agency: Army
Property Number: 21199010901
Status: Unutilized
Directions: State Highway 114
Comments:
Reasons: Secured Area; Within 2000 ft. of flammable or explosive material

Bldg. 9361–06
Radford Army Ammunition Plant
Material Storage
Radford VA 24141
Landholding Agency: Army
Property Number: 21199010903
Status: Unutilized
Directions: State Highway 114
Comments:
Reasons: Secured Area; Within 2000 ft. of flammable or explosive material

Bldg. 9500–00
Radford Army Ammunition Plant
Nitrating House
Radford VA 24141
Landholding Agency: Army
Property Number: 21199010904
Status: Unutilized
Directions: State Highway 114
Comments:
Reasons: Secured Area; Within 2000 ft. of flammable or explosive material

Bldg. 9503–00
Radford Army Ammunition Plant
Finishing House
Radford VA 24141
Landholding Agency: Army
Property Number: 21199010905
Status: Unutilized
Directions: State Highway 114
Comments:
Reasons: Secured Area; Within 2000 ft. of flammable or explosive material

Bldg. 9510–00
Radford Army Ammunition Plant
Spent Acid Recovery
Radford VA 24141
Landholding Agency: Army
Property Number: 21199010907
Status: Unutilized
Directions: State Highway 114
Comments:
Reasons: Secured Area; Within 2000 ft. of flammable or explosive material

Bldg. 9521–00
Radford Army Ammunition Plant
Personnel Rest House
Radford VA 24141
Landholding Agency: Army
Property Number: 21199010908
Status: Unutilized
Directions: State Highway 114
Comments:
Reasons: Secured Area; Within 2000 ft. of flammable or explosive material

Bldg. 9546–01
Radford Army Ammunition Plant
Soda Ash Mix House
Radford VA 24141
Landholding Agency: Army
Property Number: 21199010909
Status: Unutilized
Directions: State Highway 114
Comments:
Reasons: Secured Area; Within 2000 ft. of flammable or explosive material

Bldg. 9550–00
Radford Army Ammunition Plant
Storage Bldg.
Radford VA 24141
Landholding Agency: Army
Property Number: 21199010910
Status: Unutilized
Directions: State Highway 114
Comments:
Reasons: Within 2000 ft. of flammable or explosive material; Secured Area

Bldg. 9556–00
Radford Army Ammunition Plant
Cooling Tower Control House
Radford VA 24141
Landholding Agency: Army
Property Number: 21199010911
Status: Unutilized
Directions: State Highway 114
Comments:
Reasons: Secured Area; Within 2000 ft. of flammable or explosive material

Bldg. 9560
Radford Army Ammunition Plant
Carborn Treatment House
Radford VA 24141
Landholding Agency: Army
Property Number: 21199010912
Status: Unutilized
Directions: State Highway 114
Comments:
Reasons: Secured Area; Within 2000 ft. of flammable or explosive material

Bldg. 1600
Radford Army Ammunition Plant
Solvent Recovery House
Radford VA 24141
Landholding Agency: Army
Property Number: 21199011521
Status: Unutilized
Directions: State Highway 114
Comments:
Reasons: Within 2000 ft. of flammable or explosive material; Secured Area

Bldg. 1604
Radford Army Ammunition Plant
Solvent Recovery House
Radford VA 24141
Landholding Agency: Army
Property Number: 21199011522
Status: Unutilized
Directions: State Highway 114
Comments:
Reasons: Within 2000 ft. of flammable or explosive material; Secured Area

Bldg. 1608
Radford Army Ammunition Plant
Solvent Recovery House
Radford VA 24141
Landholding Agency: Army
Property Number: 21199011523
Status: Unutilized
Directions: State Highway 114
Comments:
Reasons: Secured Area; Within 2000 ft. of flammable or explosive material

Bldg. NR 0221–00
Radford Army Ammunition Plant
Boiler House
Dublin VA 24084
Landholding Agency: Army
Property Number: 21199011524
Status: Unutilized
Directions:
Comments:
Reasons: Secured Area; Within 2000 ft. of flammable or explosive material

Bldg. 1618
Radford Army Ammunition Plant
Solvent Recovery House
Radford VA 24141
Landholding Agency: Army
Property Number: 21199011525
Status: Unutilized
Directions: State Highway 114
Comments:
Reasons: Within 2000 ft. of flammable or explosive material; Secured Area

Bldg. 1619
Radford Army Ammunition Plant
Solvent Recovery House
Radford VA 24141
Landholding Agency: Army
Property Number: 21199011526
Status: Unutilized
Directions: State Highway 114
Comments:

Reasons: Secured Area; Within 2000 ft. of flammable or explosive material

Bldg. 1622
Radford Army Ammunition Plant
Solvent Recovery House
Radford VA 24141
Landholding Agency: Army
Property Number: 21199011527
Status: Unutilized
Directions: State Highway 114
Comments:
Reasons: Within 2000 ft. of flammable or explosive material; Secured Area

Bldg. 1625
Radford Army Ammunition Plant
Solvent Recovery House
Radford VA 24141
Landholding Agency: Army
Property Number: 21199011528
Status: Unutilized
Directions: State Highway 114
Comments:
Reasons: Secured Area; Within 2000 ft. of flammable or explosive material

Bldg. 208
Radford Army Ammunition Plant
Office Building
Radford VA 24141
Landholding Agency: Army
Property Number: 21199011529
Status: Unutilized
Directions: State Highway 114
Comments:
Reasons: Within 2000 ft. of flammable or explosive material; Secured Area

Bldg. 1650
Radford Army Ammunition Plant
Water Dry House
Radford VA 24141
Landholding Agency: Army
Property Number: 21199011530
Status: Unutilized
Directions: State Highway 114
Comments:
Reasons: Secured Area; Within 2000 ft. of flammable or explosive material

Bldg. 1651
Radford Army Ammunition Plant
Water Dry House
Radford VA 24141
Landholding Agency: Army
Property Number: 21199011531
Status: Unutilized
Directions: State Highway 114
Comments:
Reasons: Secured Area; Within 2000 ft. of flammable or explosive material

Bldg. 1652
Radford Army Ammunition Plant
Water Dry House
Radford VA 24141
Landholding Agency: Army
Property Number: 21199011532
Status: Unutilized
Directions: State Highway 114
Comments:
Reasons: Within 2000 ft. of flammable or explosive material; Secured Area

Bldg. 221–25
Radford Army Ammunition Plant
Burning Ground Office
Radford VA 24141
Landholding Agency: Army
Property Number: 21199011533
Status: Unutilized
Directions: State Highway 114
Comments:
Reasons: Within 2000 ft. of flammable or explosive material; Secured Area

Bldg. 1653
Radford Army Ammunition Plant
Water Dry House
Radford VA 24141
Landholding Agency: Army
Property Number: 21199011534
Status: Unutilized
Directions: State Highway 114
Comments:
Reasons: Secured Area; Within 2000 ft. of flammable or explosive material

Bldg. 1654
Radford Army Ammunition Plant
Water Dry House
Radford VA 24141
Landholding Agency: Army
Property Number: 21199011535
Status: Unutilized
Directions: State Highway 114
Comments:
Reasons: Secured Area; Within 2000 ft. of flammable or explosive material

Bldg. NR 222–00
Radford Army Ammunition Plant
Change House, New River Facility
Dublin VA 24084
Landholding Agency: Army
Property Number: 21199011536
Status: Unutilized
Directions:
Comments:
Reasons: Secured Area; Within 2000 ft. of flammable or explosive material

Bldg. 1655
Radford Army Ammunition Plant
Water Dry House
Radford VA 24141
Landholding Agency: Army
Property Number: 21199011537
Status: Unutilized
Directions: State Highway 114
Comments:
Reasons: Secured Area; Within 2000 ft. of flammable or explosive material

Bldg. 1656
Radford Army Ammunition Plant
Water Dry House
Radford VA 24141
Landholding Agency: Army
Property Number: 21199011538
Status: Unutilized
Directions: State Highway 114
Comments:
Reasons: Within 2000 ft. of flammable or explosive material; Secured Area

Bldg. NR–225
Radford Army Ammunition Plant
Maintenance Office, New River Facility
Radford VA 24084
Landholding Agency: Army
Property Number: 21199011539
Status: Unutilized
Directions:
Comments:
Reasons: Secured Area; Within 2000 ft. of flammable or explosive material

Bldg. 1657
Radford Army Ammunition Plant
Water Dry House
Radford VA 24141
Landholding Agency: Army
Property Number: 21199011540
Status: Unutilized
Directions: State Highway 114
Comments:
Reasons: Within 2000 ft. of flammable or explosive material; Secured Area

Bldg. 1658
Radford Army Ammunition Plant
Water Dry House
Radford VA 24141
Landholding Agency: Army
Property Number: 21199011541
Status: Unutilized
Directions: State Highway 114
Comments:
Reasons: Secured Area; Within 2000 ft. of flammable or explosive material

Bldg. 0407–00
Radford Army Ammunition Plant
Filter Plant Station
Radford VA 24141
Landholding Agency: Army
Property Number: 21199011542
Status: Unutilized
Directions: State Highway 114
Comments:
Reasons: Within 2000 ft. of flammable or explosive material; Secured Area

Bldg. 0403–09
Radford Army Ammunition Plant
Control House Water Monitoring
Radford VA 24141
Landholding Agency: Army
Property Number: 21199011543
Status: Unutilized
Directions: State Highway 114
Comments:
Reasons: Within 2000 ft. of flammable or explosive material; Secured Area

Bldg. 1659
Radford Army Ammunition Plant
Water Dry House
Radford VA 24141
Landholding Agency: Army
Property Number: 21199011544
Status: Unutilized
Directions: State Highway 114
Comments:
Reasons: Secured Area; Within 2000 ft. of flammable or explosive material

Bldg. 1675
Radford Army Ammunition Plant
Water Dry House
Radford VA 24141
Landholding Agency: Army
Property Number: 21199011545
Status: Unutilized
Directions: State Highway 114
Comments:
Reasons: Within 2000 ft. of flammable or explosive material; Secured Area

Bldg. 1676
Radford Army Ammunition Plant
Water Dry House
Radford VA 24141
Landholding Agency: Army
Property Number: 21199011547
Status: Unutilized
Directions: State Highway 114
Comments:
Reasons: Secured Area; Within 2000 ft. of flammable or explosive material

Bldg. 1007
Radford Army Ammunition Plant
Acid Screening House

Radford VA 24141
Landholding Agency: Army
Property Number: 21199011548
Status: Unutilized
Directions: State Highway 114
Comments:
Reasons: Secured Area; Within 2000 ft. of flammable or explosive material

Bldg. 1008
Radford Army Ammunition Plant
Acid Heat and Circulating House
Radford VA 24141
Landholding Agency: Army
Property Number: 21199011549
Status: Unutilized
Directions: State Highway 114
Comments:
Reasons: Within 2000 ft. of flammable or explosive material; Secured Area

Bldg. 1010
Radford Army Ammunition Plant
Dry House and Conveyor
Radford VA 24141
Landholding Agency: Army
Property Number: 21199011550
Status: Unutilized
Directions: State Highway 114
Comments:
Reasons: Within 2000 ft. of flammable or explosive material; Secured Area

Bldg. 1012
Radford Army Ammunition Plant
Nitrating House
Radford VA 24141
Landholding Agency: Army
Property Number: 21199011551
Status: Unutilized
Directions: State Highway 114
Comments:
Reasons: Within 2000 ft. of flammable or explosive material; Secured Area

Bldg. 1014–00
Radford Army Ammunition Plant
Emergency Catch House
Radford VA 24141
Landholding Agency: Army
Property Number: 21199011553
Status: Unutilized
Directions: State Highway 114
Comments:
Reasons: Secured Area; Within 2000 ft. of flammable or explosive material

Bldg. 1019
Radford Army Ammunition Plant
Boiling Tub House
Radford VA 24141
Landholding Agency: Army
Property Number: 21199011554
Status: Unutilized
Directions: State Highway 114
Comments:
Reasons: Within 2000 ft. of flammable or explosive material; Secured Area

Bldg. 1024–00
Radford Army Ammunition Plant
Poacher House
Radford VA 24141
Landholding Agency: Army
Property Number: 21199011555
Status: Unutilized
Directions: State Highway 114
Comments:
Reasons: Within 2000 ft. of flammable or explosive material; Secured Area

Bldg. 1026–00
Radford Army Ammunition Plant
Final Wringer House Equipment
Radford VA 24141
Landholding Agency: Army
Property Number: 21199011556
Status: Unutilized
Directions: State Highway 114
Comments:
Reasons: Within 2000 ft. of flammable or explosive material; Secured Area

Bldg. 1500–00
Radford Army Ammunition Plant
Dehy Press House
Radford VA 24141
Landholding Agency: Army
Property Number: 21199011557
Status: Unutilized
Directions: State Highway 114
Comments:
Reasons: Secured Area; Within 2000 ft. of flammable or explosive material

Bldg. 1501–00
Radford Army Ammunition Plant
Alcohol Pump and Accumulator House
Radford VA 24141
Landholding Agency: Army
Property Number: 21199011558
Status: Unutilized
Directions: State Highway 114
Comments:
Reasons: Secured Area; Within 2000 ft. of flammable or explosive material

Bldg. 1506–00
Radford Army Ammunition Plant
Diphenylamine Mix House
Radford VA 24141
Landholding Agency: Army
Property Number: 21199011559
Status: Unutilized
Directions: State Highway 114
Comments:
Reasons: Secured Area; Within 2000 ft. of flammable or explosive material

Bldg. 1508–00
Radford Army Ammunition Plant
Mix House No. 1
Radford VA 24141
Landholding Agency: Army
Property Number: 21199011560
Status: Unutilized
Directions: State Highway 114
Comments:
Reasons: Secured Area; Within 2000 ft. of flammable or explosive material

Bldg. 1509–00
Radford Army Ammunition Plant
Mix House No. 2
Radford VA 24141
Landholding Agency: Army
Property Number: 21199011561
Status: Unutilized
Directions: State Highway 114
Comments:
Reasons: Secured Area; Within 2000 ft. of flammable or explosive material

Bldg. 1510–00
Radford Army Ammunition Plant
Block Press House
Radford VA 24141
Landholding Agency: Army
Property Number: 21199011562
Status: Unutilized
Directions: State Highway 114
Comments:
Reasons: Within 2000 ft. of flammable or explosive material; Secured Area

Bldg. 1511–00
Radford Army Ammunition Plant
Block Press House
Radford VA 24141
Landholding Agency: Army
Property Number: 21199011563
Status: Unutilized
Directions: State Highway 114
Comments:
Reasons: Secured Area; Within 2000 ft. of flammable or explosive material

Bldg. 1512–00
Radford Army Ammunition Plant
Block Press House
Radford VA 24141
Landholding Agency: Army
Property Number: 21199011564
Status: Unutilized
Directions: State Highway 114
Comments:
Reasons: Secured Area; Within 2000 ft. of flammable or explosive material

Bldg. 1513–00
Radford Army Ammunition Plant
Finishing Press House No. 2
Radford VA 24141
Landholding Agency: Army
Property Number: 21199011565
Status: Unutilized
Directions: State Highway 114
Comments:
Reasons: Secured Area; Within 2000 ft. of flammable or explosive material

Bldg. 1514–00
Radford Army Ammunition Plant
Finishing Press House No. 3
Radford VA 24141
Landholding Agency: Army
Property Number: 21199011566
Status: Unutilized
Directions: State Highway 114
Comments:
Reasons: Within 2000 ft. of flammable or explosive material; Secured Area

Bldg. 1521–00
Radford Army Ammunition Plant
Hydraulic Station
Radford VA 24141
Landholding Agency: Army
Property Number: 21199011567
Status: Unutilized
Directions:
Comments:
Reasons: Secured Area; Within 2000 ft. of flammable or explosive material

Bldg. 1548–00
Radford Army Ammunition Plant
Oil Storage House
Radford VA 24141
Landholding Agency: Army
Property Number: 21199011568
Status: Unutilized
Directions: State Highway 114
Comments:
Reasons: Within 2000 ft. of flammable or explosive material; Secured Area

Bldg. 1549–00
Radford Army Ammunition Plant
Area Maintenance Shop
Radford VA 24141
Landholding Agency: Army
Property Number: 21199011569
Status: Unutilized
Directions: State Highway 114
Comments:

Reasons: Secured Area; Within 2000 ft. of flammable or explosive material

Bldg. 1554–00
Radford Army Ammunition Plant
Powder Line Office
Radford VA 24141
Landholding Agency: Army
Property Number: 21199011570
Status: Unutilized
Directions: State Highway 114
Comments:
Reasons: Secured Area; Within 2000 ft. of flammable or explosive material

Bldg. 1558–00
Radford Army Ammunition Plant
Ingredient Storehouse
Radford VA 24141
Landholding Agency: Army
Property Number: 21199011571
Status: Unutilized
Directions: State Highway 114
Comments:
Reasons: Secured Area; Within 2000 ft. of flammable or explosive material

Bldg. 1559–00
Radford Army Ammunition Plant
Ingredient Storehouse
Radford VA 24141
Landholding Agency: Army
Property Number: 21199011572
Status: Unutilized
Directions: State Highway 114
Comments:
Reasons: Within 2000 ft. of flammable or explosive material; Secured Area

Bldg. 1567–00
Radford Army Ammunition Plant
Lunch Room
Radford VA 24141
Landholding Agency: Army
Property Number: 21199011573
Status: Unutilized
Directions: State Highway 114
Comments:
Reasons: Secured Area; Within 2000 ft. of flammable or explosive material

Bldg. 1685–00
Radford Army Ammunition Plant
Sorting House
Radford VA 24141
Landholding Agency: Army
Property Number: 21199011574
Status: Unutilized
Directions: State Highway 114
Comments:
Reasons: Secured Area; Within 2000 ft. of flammable or explosive material

Bldg. 1703–00
Radford Army Ammunition Plant
Coating House
Radford VA 24141
Landholding Agency: Army
Property Number: 21199011575
Status: Unutilized
Directions: State Highway 114
Comments:
Reasons: Within 2000 ft. of flammable or explosive material; Secured Area

Bldg. 1725–00
Radford Army Ammunition Plant
Air Dry House
Radford VA 24141
Landholding Agency: Army
Property Number: 21199011576
Status: Unutilized
Directions: State Highway 114
Comments:
Reasons: Secured Area; Within 2000 ft. of flammable or explosive material

Bldg. 1851–00
Radford Army Ammunition Plant
Screening House
Radford VA 24141
Landholding Agency: Army
Property Number: 21199011577
Status: Unutilized
Directions: State Highway 114
Comments:
Reasons: Secured Area; Within 2000 ft. of flammable or explosive material

Bldg. 1980–05
Radford Army Ammunition Plant
Radford VA 24141
Landholding Agency: Army
Property Number: 21199011578
Status: Unutilized
Directions: State Highway 114
Comments:
Reasons: Within 2000 ft. of flammable or explosive material; Secured Area Other—Latrine; detached structure

Bldg. 1980–06
Radford Army Ammunition Plant
Radford VA 24141
Landholding Agency: Army
Property Number: 21199011579
Status: Unutilized
Directions: State Highway 114
Comments:
Reasons: Secured Area Other—latrine; detached structure Within 2000 ft. of flammable or explosive material

Bldg. 1980–17
Radford Army Ammunition Plant
Radford VA 24141
Landholding Agency: Army
Property Number: 21199011580
Status: Unutilized
Directions: State Highway 114
Comments:
Reasons: Within 2000 ft. of flammable or explosive material; Other—latrine; detached structure Secured Area

Bldg. 2051–00
Radford Army Ammunition Plant
NC Fines Separation
Radford VA 24141
Landholding Agency: Army
Property Number: 21199011581
Status: Unutilized
Directions: State Highway 114
Comments:
Reasons: Within 2000 ft. of flammable or explosive material; Secured Area

Bldg. 2509–00
Radford Army Ammunition Plant
Mix House
Radford VA 24141
Landholding Agency: Army
Property Number: 21199011582
Status: Unutilized
Directions: State Highway 114
Comments:
Reasons: Secured Area; Within 2000 ft. of flammable or explosive material

Bldg. 2517
Radford Army Ammunition Plant
Finishing Press House
Radford VA 24141
Landholding Agency: Army
Property Number: 21199011583
Status: Unutilized
Directions: State Highway 114
Comments:
Reasons: Within 2000 ft. of flammable or explosive material; Secured Area

Bldg. 2518
Radford Army Ammunition Plant
Finishing Press And Cutting House
Radford VA 24141
Landholding Agency: Army
Property Number: 21199011585
Status: Unutilized
Directions: State Highway 114
Comments:
Reasons: Within 2000 ft. of flammable or explosive material; Secured Area

Bldg. 2519
Radford Army Ammunition Plant
Finishing Press And Cutting House
Radford VA 24141
Landholding Agency: Army
Property Number: 21199011588
Status: Unutilized
Directions: State Highway 114
Comments:
Reasons: Within 2000 ft. of flammable or explosive material; Secured Area

Bldg. 2559–00
Radford Army Ammunition Plant
Refrigeration Building
Radford VA 24141
Landholding Agency: Army
Property Number: 21199011591
Status: Unutilized
Directions: State Highway 114
Comments:
Reasons: Secured Area; Within 2000 ft. of flammable or explosive material

Bldg. 3045–00
Radford Army Ammunition Plant
State Highway 114
Radford VA
Landholding Agency: Army
Property Number: 21199013559
Status: Unutilized
Directions:
Comments:
Reasons: Within 2000 ft. of flammable or explosive material; Secured Area

Bldg. 3022–00
Radford Army Ammunition Plant
State Highway 114
Radford VA
Landholding Agency: Army
Property Number: 21199013560
Status: Unutilized
Directions:
Comments:
Reasons: Secured Area; Within 2000 ft. of flammable or explosive material

Bldg. 3050–00
Radford Army Ammunition Plant
State Highway 114
Radford VA
Landholding Agency: Army
Property Number: 21199013561
Status: Unutilized
Directions:
Comments:
Reasons: Secured Area; Within 2000 ft. of flammable or explosive material

Bldg. 3046–00
Radford Army Ammunition Plant
State Highway 114

Radford VA
Landholding Agency: Army
Property Number: 21199013562
Status: Unutilized
Directions:
Comments:
Reasons: Within 2000 ft. of flammable or explosive material; Secured Area

Bldg. 3007–00
Radford Army Ammunition Plant
State Highway 114
Radford VA
Landholding Agency: Army
Property Number: 21199013563
Status: Unutilized
Directions:
Comments:
Reasons: Within 2000 ft. of flammable or explosive material; Secured Area

Bldg. 3002–00
Radford Army Ammunition Plant
State Highway 114
Radford VA
Landholding Agency: Army
Property Number: 21199013564
Status: Unutilized
Directions:
Comments:
Reasons: Within 2000 ft. of flammable or explosive material; Secured Area

Bldg. 3010–00
Radford Army Ammunition Plant
State Highway 114
Radford VA
Landholding Agency: Army
Property Number: 21199013566
Status: Unutilized
Directions:
Comments:
Reasons: Within 2000 ft. of flammable or explosive material; Secured Area

Bldg. 3019–00
Radford Army Ammunition Plant
State Highway 114
Radford VA
Landholding Agency: Army
Property Number: 21199013567
Status: Unutilized
Directions:
Comments:
Reasons: Secured Area; Within 2000 ft. of flammable or explosive material

Bldg. 4912–06
Radford Army Ammunition Plant
State Highway 114
Radford VA
Landholding Agency: Army
Property Number: 21199013568
Status: Unutilized
Directions:
Comments:
Reasons: Secured Area; Within 2000 ft. of flammable or explosive material

Bldg. 9544–00
Radford Army Ammunition Plant
State Highway 114
Radford VA
Landholding Agency: Army
Property Number: 21199013569
Status: Unutilized
Directions:
Comments:
Reasons: Within 2000 ft. of flammable or explosive material; Secured Area

Bldg. 206
Radford Army Ammunition Plant
State Highway 114
Radford VA
Landholding Agency: Army
Property Number: 21199013570
Status: Unutilized
Directions:
Comments:
Reasons: Within 2000 ft. of flammable or explosive material; Secured Area

Bldg. 221–05
Radford Army Ammunition Plant
State Highway 114
Radford VA 24141
Landholding Agency: Army
Property Number: 21199110142
Status: Unutilized
Directions:
Comments:
Reasons: Secured Area; Within 2000 ft. of flammable or explosive material

Bldg. 221–06
Radford Army Ammunition Plant
State Highway 114
Radford VA 24141
Landholding Agency: Army
Property Number: 21199110143
Status: Unutilized
Directions:
Comments:
Reasons: Within 2000 ft. of flammable or explosive material; Secured Area

Bldg. B1826 Elev. Motor House
Radford Army Ammunition Plant
State Hwy. 114
Radford VA 24141
Landholding Agency: Army
Property Number: 21199120071
Status: Unutilized
Directions:
Comments:
Reasons: Within 2000 ft. of flammable or explosive material; Secured Area

Bldg. A426
Powder Burning Ground Office
Radford Army Ammunition Plant
Radford VA 24141
Landholding Agency: Army
Property Number: 21199140618
Status: Unutilized
Directions: State Highway 114
Comments:
Reasons: Within 2000 ft. of flammable or explosive material; Secured Area

Bldg. 456, Filter House
Radford Army Ammunition Plant
Radford VA 24141
Landholding Agency: Army
Property Number: 21199140619
Status: Unutilized
Directions: State Highway 114
Comments:
Reasons: Secured Area; Within 2000 ft. of flammable or explosive material

Bldg. 734
AOP Plant Control House
Radford Army Ammunition Plant
Radford VA 24141
Landholding Agency: Army
Property Number: 21199140620
Status: Unutilized
Directions: State Highway 114
Comments:
Reasons: Within 2000 ft. of flammable or explosive material; Secured Area

Bldg. D1733, Control Shelter
Radford Army Ammunition Plant
Radford VA 24141
Landholding Agency: Army
Property Number: 21199140621
Status: Unutilized
Directions: State Highway 114
Comments:
Reasons: Secured Area; Within 2000 ft. of flammable or explosive material

Bldg. B3553, Lunch Room
Radford Army Ammunition Plant
Radford VA 24141
Landholding Agency: Army
Property Number: 21199140622
Status: Unutilized
Directions: State Highway 114
Comments:
Reasons: Within 2000 ft. of flammable or explosive material; Secured Area

Bldg. B3670, Control House
Radford Army Ammunition Plant
Radford VA 24141
Landholding Agency: Army
Property Number: 21199140623
Status: Unutilized
Directions: State Highway 114
Comments:
Reasons: Secured Area; Within 2000 ft. of flammable or explosive material

Bldg. B3671, Control House
Radford Army Ammunition Plant
Radford VA 24141
Landholding Agency: Army
Property Number: 21199140624
Status: Unutilized
Directions: State Highway 114
Comments:
Reasons: Secured Area; Within 2000 ft. of flammable or explosive material

Bldgs. C3676
Radford Army Ammunition Plant
Radford VA 24141
Landholding Agency: Army
Property Number: 21199140626
Status: Unutilized
Directions: State Highway 114
Comments:
Reasons: Within 2000 ft. of flammable or explosive material; Secured Area

Bldg. B3677, Elevator House
Radford Army Ammunition Plant
Radford VA 24141
Landholding Agency: Army
Property Number: 21199140627
Status: Unutilized
Directions: State Highway 114
Comments:
Reasons: Secured Area; Within 2000 ft. of flammable or explosive material

Bldg. A4912–05, Blower House
Radford Army Ammunition Plant
Radford VA 24141
Landholding Agency: Army
Property Number: 21199140628
Status: Unutilized
Directions: State Highway 114
Comments:
Reasons: Within 2000 ft. of flammable or explosive material; Secured Area

Bldg. B4912–11, Control House
Radford Army Ammunition Plant
Radford VA 24141
Landholding Agency: Army
Property Number: 21199140629

Status: Unutilized
Directions: State Highway 114
Comments:
Reasons: Secured Area; Within 2000 ft. of flammable or explosive material

Bldg. C4913, Control House
Radford Army Ammunition Plant
Radford VA 24141
Landholding Agency: Army
Property Number: 21199140630
Status: Unutilized
Directions: State Highway 114
Comments:
Reasons: Within 2000 ft. of flammable or explosive material; Secured Area

Bldg. D4915, Storage Building
Radford Army Ammunition Plant
Radford VA 24141
Landholding Agency: Army
Property Number: 21199140631
Status: Unutilized
Directions: State Highway 114
Comments:
Reasons: Secured Area; Within 2000 ft. of flammable or explosive material

Bldg. 7103–01, HE Saw House
Radford Army Ammunition Plant
Radford VA 24141
Landholding Agency: Army
Property Number: 21199140632
Status: Unutilized
Directions: State Highway 114
Comments:
Reasons: Secured Area; Within 2000 ft. of flammable or explosive material

Bldg. A7103–01, Motor House
Radford Army Ammunition Plant
Radford VA 24141
Landholding Agency: Army
Property Number: 21199140633
Status: Unutilized
Directions: State Highway 114
Comments:
Reasons: Within 2000 ft. of flammable or explosive material; Secured Area

Bldg. A1732
Radford Army Ammunition Plant
Radford VA 24141
Landholding Agency: Army
Property Number: 21199220210
Status: Unutilized
Directions:
Comments:
Reasons: Secured Area

Bldg. B1732
Radford Army Ammunition Plant
Radford VA 24141
Landholding Agency: Army
Property Number: 21199220211
Status: Unutilized
Directions:
Comments:
Reasons: Secured Area

Bldg. C1732
Radford Army Ammunition Plant
Radford VA 24141
Landholding Agency: Army
Property Number: 21199220212
Status: Unutilized
Directions:
Comments:
Reasons: Secured Area

Bldg. A1999
Radford Army Ammunition Plant
Radford VA 24141
Landholding Agency: Army
Property Number: 21199220213
Status: Unutilized
Directions:
Comments:
Reasons: Secured Area

Bldg. B4915
Radford Army Ammunition Plant
Radford VA 24141
Landholding Agency: Army
Property Number: 21199220214
Status: Unutilized
Directions:
Comments:
Reasons: Secured Area

Bldg. A4921
Radford Army Ammunition Plant
Radford VA 24141
Landholding Agency: Army
Property Number: 21199220215
Status: Unutilized
Directions:
Comments:
Reasons: Secured Area

Bldg. 7102–01
Radford Army Ammunition Plant
Radford VA 24141
Landholding Agency: Army
Property Number: 21199220216
Status: Unutilized
Directions:
Comments:
Reasons: Secured Area

Bldg. A7102–01
Radford Army Ammunition Plant
Radford VA 24141
Landholding Agency: Army
Property Number: 21199220217
Status: Unutilized
Directions:
Comments:
Reasons: Secured Area

Bldg. B7102–01
Radford Army Ammunition Plant
Radford VA 24141
Landholding Agency: Army
Property Number: 21199220218
Status: Unutilized
Directions:
Comments:
Reasons: Secured Area

Bldg. US 100–02
Radford Army Ammunition Plant
Radford VA 24141
Landholding Agency: Army
Property Number: 21199230100
Status: Unutilized
Directions:
Comments:
Reasons: Secured Area

Bldg. 6208
Radford Army Ammunition Plant
Radford VA 24141
Landholding Agency: Army
Property Number: 21199230101
Status: Unutilized
Directions:
Comments:
Reasons: Secured Area

Bldg. 9477–5
Radford Army Ammunition Plant
Radford VA 24141
Landholding Agency: Army
Property Number: 21199230102
Status: Unutilized
Directions:
Comments:
Reasons: Secured Area

Bldg. 9481
Radford Army Ammunition Plant
Radford VA 24141
Landholding Agency: Army
Property Number: 21199230103
Status: Unutilized
Directions:
Comments:
Reasons: Secured Area

Bldg. B7103–01, Motor House
Radford Army Ammunition Plant
Radford VA 24141
Landholding Agency: Army
Property Number: 21199240324
Status: Unutilized
Directions:
Comments:
Reasons: Within 2000 ft. of flammable or explosive material; Other—Extensive Deterioration; Secured Area

Bldg. 1980–27
Red Water Field Office
Radford Army Ammunition Plant
Radford VA 24141
Landholding Agency: Army
Property Number: 21199430341
Status: Unutilized
Directions:
Comments:
Reasons: Within 2000 ft. of flammable or explosive material; Secured Area

Bldg. 221–23
Red Water Field Office
Radford Army Ammunition Plant
Radford VA 24141
Landholding Agency: Army
Property Number: 21199430342
Status: Unutilized
Directions:
Comments:
Reasons: Within 2000 ft. of flammable or explosive material; Secured Area

Bldg. 420–01
Red Water Field Office
Radford Army Ammunition Plant
Radford VA 24141
Landholding Agency: Army
Property Number: 21199430343
Status: Unutilized
Directions:
Comments:
Reasons: Secured Area; Within 2000 ft. of flammable or explosive material

Bldg. 420–02
Red Water Field Office
Radford Army Ammunition Plant
Radford VA 24141
Landholding Agency: Army
Property Number: 21199430344
Status: Unutilized
Directions:
Comments:
Reasons: Within 2000 ft. of flammable or explosive material; Secured Area

Bldg. 1523–00
Red Water Field Office
Radford Army Ammunition Plant
Radford VA 24141
Landholding Agency: Army
Property Number: 21199430345

Status: Unutilized
Directions:
Comments:
Reasons: Within 2000 ft. of flammable or explosive material; Secured Area

Bldg. 1625–00
Red Water Field Office
Radford Army Ammunition Plant
Radford VA 24141
Landholding Agency: Army
Property Number: 21199430346
Status: Unutilized
Directions:
Comments:
Reasons: Secured Area; Within 2000 ft. of flammable or explosive material

Bldg. 2502–000
Red Water Field Office
Radford Army Ammunition Plant
Radford VA 24141
Landholding Agency: Army
Property Number: 21199430347
Status: Unutilized
Directions:
Comments:
Reasons: Secured Area; Within 2000 ft. of flammable or explosive material

Bldg. 3015–00
Red Water Field Office
Radford Army Ammunition Plant
Radford VA 24141
Landholding Agency: Army
Property Number: 21199430348
Status: Unutilized
Directions:
Comments:
Reasons: Within 2000 ft. of flammable or explosive material; Secured Area

Bldg. 3561–00
Red Water Field Office
Radford Army Ammunition Plant
Radford VA 24141
Landholding Agency: Army
Property Number: 21199430349
Status: Unutilized
Directions:
Comments:
Reasons: Secured Area; Within 2000 ft. of flammable or explosive material

Bldg. 3680–00
Red Water Field Office
Radford Army Ammunition Plant
Radford VA 24141
Landholding Agency: Army
Property Number: 21199430350
Status: Unutilized
Directions:
Comments:
Reasons: Within 2000 ft. of flammable or explosive material; Secured Area

Bldg. 3693–00
Red Water Field Office
Radford Army Ammunition Plant
Radford VA 24141
Landholding Agency: Army
Property Number: 21199430351
Status: Unutilized
Directions:
Comments:
Reasons: Within 2000 ft. of flammable or explosive material; Secured Area

Bldg. 4702–00
Red Water Field Office
Radford Army Ammunition Plant
Radford VA 24141
Landholding Agency: Army
Property Number: 21199430352
Status: Unutilized
Directions:
Comments:
Reasons: Within 2000 ft. of flammable or explosive material; Secured Area

Bldg. 4904–00
Red Water Field Office
Radford Army Ammunition Plant
Radford VA 24141
Landholding Agency: Army
Property Number: 21199430353
Status: Unutilized
Directions:
Comments:
Reasons: Secured Area; Within 2000 ft. of flammable or explosive material

Bldg. 4911–01
Red Water Field Office
Radford Army Ammunition Plant
Radford VA 24141
Landholding Agency: Army
Property Number: 21199430354
Status: Unutilized
Directions:
Comments:
Reasons: Within 2000 ft. of flammable or explosive material; Secured Area

Bldg. 4939–00
Red Water Field Office
Radford Army Ammunition Plant
Radford VA 24141
Landholding Agency: Army
Property Number: 21199430355
Status: Unutilized
Directions:
Comments:
Reasons: Secured Area; Within 2000 ft. of flammable or explosive material

Bldg. 6208–00
Red Water Field Office
Radford Army Ammunition Plant
Radford VA 24141
Landholding Agency: Army
Property Number: 21199430356
Status: Unutilized
Directions:
Comments:
Reasons: Secured Area; Within 2000 ft. of flammable or explosive material

Bldg. 7501–00
Red Water Field Office
Radford Army Ammunition Plant
Radford VA 24141
Landholding Agency: Army
Property Number: 21199430357
Status: Unutilized
Directions:
Comments:
Reasons: Secured Area; Within 2000 ft. of flammable or explosive material

Bldg. 9477–06
Red Water Field Office
Radford Army Ammunition Plant
Radford VA 24141
Landholding Agency: Army
Property Number: 21199430358
Status: Unutilized
Directions:
Comments:
Reasons: Within 2000 ft. of flammable or explosive material; Secured Area

Bldg. 9505–00
Red Water Field Office
Radford Army Ammunition Plant
Radford VA 24141
Landholding Agency: Army
Property Number: 21199430359
Status: Unutilized
Directions:
Comments:
Reasons: Secured Area; Within 2000 ft. of flammable or explosive material

Bldg. 9543–03
Red Water Field Office
Radford Army Ammunition Plant
Radford VA 24141
Landholding Agency: Army
Property Number: 21199430360
Status: Unutilized
Directions:
Comments:
Reasons: Secured Area; Within 2000 ft. of flammable or explosive material

Bldg. A420–01
Red Water Field Office
Radford Army Ammunition Plant
Radford VA 24141
Landholding Agency: Army
Property Number: 21199430361
Status: Unutilized
Directions:
Comments:
Reasons: Within 2000 ft. of flammable or explosive material; Secured Area

Bldg. A420–02
Red Water Field Office
Radford Army Ammunition Plant
Radford VA 24141
Landholding Agency: Army
Property Number: 21199430362
Status: Unutilized
Directions:
Comments:
Reasons: Within 2000 ft. of flammable or explosive material; Secured Area

Bldg. A426–00
Red Water Field Office
Radford Army Ammunition Plant
Radford VA 24141
Landholding Agency: Army
Property Number: 21199430363
Status: Unutilized
Directions:
Comments:
Reasons: Secured Area; Within 2000 ft. of flammable or explosive material

Bldg. A429–00
Red Water Field Office
Radford Army Ammunition Plant
Radford VA 24141
Landholding Agency: Army
Property Number: 21199430364
Status: Unutilized
Directions:
Comments:
Reasons: Secured Area; Within 2000 ft. of flammable or explosive material

Bldg. A1020–00
Red Water Field Office
Radford Army Ammunition Plant
Radford VA 24141
Landholding Agency: Army
Property Number: 21199430365
Status: Unutilized
Directions:
Comments:
Reasons: Secured Area; Within 2000 ft. of flammable or explosive material

Bldg. A1524–00
Red Water Field Office
Radford Army Ammunition Plant
Radford VA 24141
Landholding Agency: Army
Property Number: 21199430366
Status: Unutilized
Directions:
Comments:
Reasons: Within 2000 ft. of flammable or explosive material; Secured Area

Bldg. A1625–00
Red Water Field Office
Radford Army Ammunition Plant
Radford VA 24141
Landholding Agency: Army
Property Number: 21199430367
Status: Unutilized
Directions:
Comments:
Reasons: Within 2000 ft. of flammable or explosive material; Secured Area

Bldg. A1851–00
Red Water Field Office
Radford Army Ammunition Plant
Radford VA 24141
Landholding Agency: Army
Property Number: 21199430368
Status: Unutilized
Directions:
Comments:
Reasons: Secured Area; Within 2000 ft. of flammable or explosive material

Bldg. A2020–00
Red Water Field Office
Radford Army Ammunition Plant
Radford VA 24141
Landholding Agency: Army
Property Number: 21199430369
Status: Unutilized
Directions:
Comments:
Reasons: Within 2000 ft. of flammable or explosive material; Secured Area

Bldg. A2502–00
Red Water Field Office
Radford Army Ammunition Plant
Radford VA 24141
Landholding Agency: Army
Property Number: 21199430370
Status: Unutilized
Directions:
Comments:
Reasons: Secured Area; Within 2000 ft. of flammable or explosive material

Bldg. A3020–00
Red Water Field Office
Radford Army Ammunition Plant
Radford VA 24141
Landholding Agency: Army
Property Number: 21199430371
Status: Unutilized
Directions:
Comments:
Reasons: Secured Area; Within 2000 ft. of flammable or explosive material

Bldg. A3507–00
Red Water Field Office
Radford Army Ammunition Plant
Radford VA 24141
Landholding Agency: Army
Property Number: 21199430372
Status: Unutilized
Directions:
Comments:
Reasons: Secured Area; Within 2000 ft. of flammable or explosive material

Bldg. A3680–00
Red Water Field Office
Radford Army Ammunition Plant
Radford VA 24141
Landholding Agency: Army
Property Number: 21199430373
Status: Unutilized
Directions:
Comments:
Reasons: Within 2000 ft. of flammable or explosive material; Secured Area

Bldg. A4901–00
Red Water Field Office
Radford Army Ammunition Plant
Radford VA 24141
Landholding Agency: Army
Property Number: 21199430374
Status: Unutilized
Directions:
Comments:
Reasons: Secured Area; Within 2000 ft. of flammable or explosive material

Bldg. A4904–00
Red Water Field Office
Radford Army Ammunition Plant
Radford VA 24141
Landholding Agency: Army
Property Number: 21199430375
Status: Unutilized
Directions:
Comments:
Reasons: Within 2000 ft. of flammable or explosive material; Secured Area

Bldg. A4910–05
Red Water Field Office
Radford Army Ammunition Plant
Radford VA 24141
Landholding Agency: Army
Property Number: 21199430376
Status: Unutilized
Directions:
Comments:
Reasons: Secured Area; Within 2000 ft. of flammable or explosive material

Bldg. A4911–01
Red Water Field Office
Radford Army Ammunition Plant
Radford VA 24141
Landholding Agency: Army
Property Number: 21199430377
Status: Unutilized
Directions:
Comments:
Reasons: Within 2000 ft. of flammable or explosive material; Secured Area

Bldg. A4912–16
Red Water Field Office
Radford Army Ammunition Plant
Radford VA 24141
Landholding Agency: Army
Property Number: 21199430378
Status: Unutilized
Directions:
Comments:
Reasons: Secured Area; Within 2000 ft. of flammable or explosive material

Bldg. A4939–00
Red Water Field Office
Radford Army Ammunition Plant
Radford VA 24141
Landholding Agency: Army
Property Number: 21199430379
Status: Unutilized
Directions:
Comments:
Reasons: Secured Area; Within 2000 ft. of flammable or explosive material

Bldg. A7501–00
Red Water Field Office
Radford Army Ammunition Plant
Radford VA 24141
Landholding Agency: Army
Property Number: 21199430380
Status: Unutilized
Directions:
Comments:
Reasons: Secured Area; Within 2000 ft. of flammable or explosive material

Bldg. A9218–00
Red Water Field Office
Radford Army Ammunition Plant
Radford VA 24141
Landholding Agency: Army
Property Number: 21199430381
Status: Unutilized
Directions:
Comments:
Reasons: Within 2000 ft. of flammable or explosive material; Secured Area

Bldg. B1625–00
Red Water Field Office
Radford Army Ammunition Plant
Radford VA 24141
Landholding Agency: Army
Property Number: 21199430382
Status: Unutilized
Directions:
Comments:
Reasons: Secured Area; Within 2000 ft. of flammable or explosive material

Bldg. B2502–00
Red Water Field Office
Radford Army Ammunition Plant
Radford VA 24141
Landholding Agency: Army
Property Number: 21199430383
Status: Unutilized
Directions:
Comments:
Reasons: Within 2000 ft. of flammable or explosive material; Secured Area

Bldg. B3680–00
Red Water Field Office
Radford Army Ammunition Plant
Radford VA 24141
Landholding Agency: Army
Property Number: 21199430384
Status: Unutilized
Directions:
Comments:
Reasons: Secured Area; Within 2000 ft. of flammable or explosive material

Bldg. B4904–00
Red Water Field Office
Radford Army Ammunition Plant
Radford VA 24141
Landholding Agency: Army
Property Number: 21199430385
Status: Unutilized
Directions:
Comments:
Reasons: Within 2000 ft. of flammable or explosive material; Secured Area

Bldg. B4910–05
Red Water Field Office
Radford Army Ammunition Plant
Radford VA 24141
Landholding Agency: Army

Property Number: 21199430386
Status: Unutilized
Directions:
Comments:
Reasons: Secured Area; Within 2000 ft. of flammable or explosive material

Bldg. C224–08
Red Water Field Office
Radford Army Ammunition Plant
Radford VA 24141
Landholding Agency: Army
Property Number: 21199430387
Status: Unutilized
Directions:
Comments:
Reasons: Secured Area; Within 2000 ft. of flammable or explosive material

Bldg. C420–01
Red Water Field Office
Radford Army Ammunition Plant
Radford VA 24141
Landholding Agency: Army
Property Number: 21199430388
Status: Unutilized
Directions:
Comments:
Reasons: Within 2000 ft. of flammable or explosive material; Secured Area

Bldg. C420–02
Red Water Field Office
Radford Army Ammunition Plant
Radford VA 24141
Landholding Agency: Army
Property Number: 21199430389
Status: Unutilized
Directions:
Comments:
Reasons: Within 2000 ft. of flammable or explosive material; Secured Area

Bldg. C1625–00
Red Water Field Office
Radford Army Ammunition Plant
Radford VA 24141
Landholding Agency: Army
Property Number: 21199430390
Status: Unutilized
Directions:
Comments:
Reasons: Secured Area; Within 2000 ft. of flammable or explosive material

Bldg. C3680–00
Red Water Field Office
Radford Army Ammunition Plant
Radford VA 24141
Landholding Agency: Army
Property Number: 21199430391
Status: Unutilized
Directions:
Comments:
Reasons: Secured Area; Within 2000 ft. of flammable or explosive material

Bldg. C4911–01
Red Water Field Office
Radford Army Ammunition Plant
Radford VA 24141
Landholding Agency: Army
Property Number: 21199430392
Status: Unutilized
Directions:
Comments:
Reasons: Secured Area; Within 2000 ft. of flammable or explosive material

Bldg. B4911–01
Red Water Field Office
Radford Army Ammunition Plant
Radford VA 24141
Landholding Agency: Army
Property Number: 21199430393
Status: Unutilized
Directions:
Comments:
Reasons: Secured Area; Within 2000 ft. of flammable or explosive material

Bldg. D420–01
Red Water Field Office
Radford Army Ammunition Plant
Radford VA 24141
Landholding Agency: Army
Property Number: 21199430394
Status: Unutilized
Directions:
Comments:
Reasons: Within 2000 ft. of flammable or explosive material; Secured Area

Bldg. E420–01
Red Water Field Office
Radford Army Ammunition Plant
Radford VA 24141
Landholding Agency: Army
Property Number: 21199430395
Status: Unutilized
Directions:
Comments:
Reasons: Within 2000 ft. of flammable or explosive material; Secured Area

Bldg. F224–08
Red Water Field Office
Radford Army Ammunition Plant
Radford VA 24141
Landholding Agency: Army
Property Number: 21199430396
Status: Unutilized
Directions:
Comments:
Reasons: Within 2000 ft. of flammable or explosive material; Secured Area

Bldg. B420–01
Radford Army Ammunition Plant
Radford VA 24141
Landholding Agency: Army
Property Number: 21199440219
Status: Unutilized
Directions:
Comments:
Reasons: Secured Area; Within 2000 ft. of flammable or explosive material

Bldg. 1022–00
Radford Army Ammunition Plant
Radford VA 24141
Landholding Agency: Army
Property Number: 21199440220
Status: Unutilized
Directions:
Comments:
Reasons: Secured Area; Within 2000 ft. of flammable or explosive material

Bldg. A1022–00
Radford Army Ammunition Plant
Radford VA 24141
Landholding Agency: Army
Property Number: 21199440221
Status: Unutilized
Directions:
Comments:
Reasons: Secured Area; Within 2000 ft. of flammable or explosive material

Bldg. A1024–00
Radford Army Ammunition Plant
Radford VA 24141
Landholding Agency: Army
Property Number: 21199440222
Status: Unutilized
Directions:
Comments:
Reasons: Within 2000 ft. of flammable or explosive material; Secured Area

Bldg. B1013–00
Radford Army Ammunition Plant
Radford VA 24141
Landholding Agency: Army
Property Number: 21199440223
Status: Unutilized
Directions:
Comments:
Reasons: Secured Area

Bldg. C1013–00
Radford Army Ammunition Plant
Radford VA 24141
Landholding Agency: Army
Property Number: 21199440224
Status: Unutilized
Directions:
Comments:
Reasons: Secured Area; Within 2000 ft. of flammable or explosive material

Bldg. D1013–00
Radford Army Ammunition Plant
Radford VA 24141
Landholding Agency: Army
Property Number: 21199440225
Status: Unutilized
Directions:
Comments:
Reasons: Within 2000 ft. of flammable or explosive material; Secured Area

Bldg. 0429–00
Radford Army Ammunition Plant
Radford VA 24141
Landholding Agency: Army
Property Number: 21199510032
Status: Unutilized
Directions:
Comments:
Reasons: Within 2000 ft. of flammable or explosive material; Secured Area

Bldg. 1522–00
Radford Army Ammunition Plant
Radford VA 24141
Landholding Agency: Army
Property Number: 21199510033
Status: Unutilized
Directions:
Comments:
Reasons: Secured Area; Within 2000 ft. of flammable or explosive material

Bldgs. 3013–00, B3013–00, C3013–00
Radford Army Ammunition Plant
Radford VA 24141
Landholding Agency: Army
Property Number: 21199520037
Status: Excess
Directions:
Comments:
Reasons: Secured Area

Bldgs. 2013–00, B2013–00
Radford Army Ammunition Plant
Radford VA 24141
Landholding Agency: Army
Property Number: 21199520052
Status: Unutilized
Directions:
Comments:
Reasons: Extensive deterioration

Bldg. A1601–00

Radford Army Ammunition Plant
Radford VA 24141
Landholding Agency: Army
Property Number: 21199530194
Status: Unutilized
Directions:
Comments:
Reasons: Extensive deterioration; Within 2000 ft. of flammable or explosive material

Bldg. A9304–00
Radford Army Ammunition Plant
Radford VA 24141
Landholding Agency: Army
Property Number: 21199610607
Status: Unutilized
Directions:
Comments:
Reasons: Within 2000 ft. of flammable or explosive material; Secured Area

Bldg. 9229–00
Radford Army Ammunition Plant
Radford VA 24141
Landholding Agency: Army
Property Number: 21199610608
Status: Unutilized
Directions:
Comments:
Reasons: Within 2000 ft. of flammable or explosive material; Secured Area

Bldg. T0117
Radford Army Ammunition Plant
Radford VA 24141
Landholding Agency: Army
Property Number: 21199830223
Status: Unutilized
Directions:
Comments:
Reasons: Within 2000 ft. of flammable or explosive material; Secured Area

5 Bldgs.
Radford Army Ammunition Plant
Radford VA 24141
Landholding Agency: Army
Property Number: 21199830224
Status: Unutilized
Directions: 0221–03, 0221–30, 0221–31, 0221–32, 0221–33
Comments:
Reasons: Within 2000 ft. of flammable or explosive material; Secured Area

3 Bldgs.
Radford Army Ammunition Plant
Radford VA 24141
Landholding Agency: Army
Property Number: 21199830225
Status: Unutilized
Directions: A0266–01, 0266–03, 0266–08
Comments:
Reasons: Within 2000 ft. of flammable or explosive material; Secured Area

Bldg. 0267–00
Radford Army Ammunition Plant
Radford VA 24141
Landholding Agency: Army
Property Number: 21199830226
Status: Unutilized
Directions:
Comments:
Reasons: Secured Area; Within 2000 ft. of flammable or explosive material

2 Bldgs.
Radford Army Ammunition Plant
Radford VA 24141
Landholding Agency: Army
Property Number: 21199830227
Status: Unutilized
Directions: 0421–00, A0421–00
Comments:
Reasons: Secured Area; Within 2000 ft. of flammable or explosive material

Bldg. A0425–00
Radford Army Ammunition Plant
Radford VA 24141
Landholding Agency: Army
Property Number: 21199830228
Status: Unutilized
Directions:
Comments:
Reasons: Within 2000 ft. of flammable or explosive material; Secured Area

Bldg. A0428–00
Radford Army Ammunition Plant
Radford VA 24141
Landholding Agency: Army
Property Number: 21199830229
Status: Unutilized
Directions:
Comments:
Reasons: Within 2000 ft. of flammable or explosive material; Secured Area

Bldg. 0525–00
Radford Army Ammunition Plant
Radford VA 24141
Landholding Agency: Army
Property Number: 21199830230
Status: Unutilized
Directions:
Comments:
Reasons: Within 2000 ft. of flammable or explosive material; Secured Area

3 Bldgs.
Radford Army Ammunition Plant
Radford VA 24141
Landholding Agency: Army
Property Number: 21199830231
Status: Unutilized
Directions: 0602–00N, 0603–00N, 0604–00N
Comments:
Reasons: Secured Area; Within 2000 ft. of flammable or explosive material

Bldg. 0906–18
Radford Army Ammunition Plant
Radford VA 24141
Landholding Agency: Army
Property Number: 21199830232
Status: Unutilized
Directions:
Comments:
Reasons: Secured Area; Within 2000 ft. of flammable or explosive material

Bldg. 1035–00
Radford Army Ammunition Plant
Radford VA 24141
Landholding Agency: Army
Property Number: 21199830233
Status: Unutilized
Directions:
Comments:
Reasons: Secured Area; Within 2000 ft. of flammable or explosive material

2 Bldgs.
Radford Army Ammunition Plant
Radford VA 24141
Landholding Agency: Army
Property Number: 21199830234
Status: Unutilized
Directions: 1601–00, C1601–00
Comments:
Reasons: Within 2000 ft. of flammable or explosive material; Secured Area

Bldg. D1601–00
Radford Army Ammunition Plant
Radford VA 24141
Landholding Agency: Army
Property Number: 21199830235
Status: Unutilized
Directions:
Comments:
Reasons: Secured Area; Within 2000 ft. of flammable or explosive material

3 Bldgs.
Radford Army Ammunition Plant
Radford VA 24141
Landholding Agency: Army
Property Number: 21199830236
Status: Unutilized
Directions: B1608–00, C1608–00, D1608–00
Comments:
Reasons: Secured Area; Within 2000 ft. of flammable or explosive material

3 Bldgs.
Radford Army Ammunition Plant
Radford VA 24141
Landholding Agency: Army
Property Number: 21199830237
Status: Unutilized
Directions: 1651–00, A1651–00, B1651–00
Comments:
Reasons: Secured Area; Within 2000 ft. of flammable or explosive material

4 Bldgs.
Radford Army Ammunition Plant
Radford VA 24141
Landholding Agency: Army
Property Number: 21199830238
Status: Unutilized
Directions: A1652–00, B1652–00, A1653–00, B1653–00
Comments:
Reasons: Within 2000 ft. of flammable or explosive material; Secured Area

Radford Army Ammunition Plant
Radford VA 24141
Landholding Agency: Army
Property Number: 21199830239
Status: Unutilized
Directions: 654–00, A1654–00, B1654–00, A1655–00, B1655–00, A1656–00, B1656–00, A1657–00, B1657–00
Comments:
Reasons: Secured Area; Within 2000 ft. of flammable or explosive material

Bldg. 1732–00
Radford Army Ammunition Plant
Radford VA 24141
Landholding Agency: Army
Property Number: 21199830240
Status: Unutilized
Directions:
Comments:
Reasons: Within 2000 ft. of flammable or explosive material; Secured Area

2 Bldgs.
Radford Army Ammunition Plant
Radford VA 24141
Landholding Agency: Army
Property Number: 21199830241
Status: Unutilized
Directions: D1801–00, 1802–00
Comments:
Reasons: Within 2000 ft. of flammable or explosive material; Secured Area

Bldg. 19803–23
Radford Army Ammunition Plant
Radford VA 24141

Landholding Agency: Army
Property Number: 21199830242
Status: Unutilized
Directions:
Comments:
Reasons: Secured Area; Within 2000 ft. of flammable or explosive material

3 Bldgs.
Radford Army Ammunition Plant
Radford VA 24141
Landholding Agency: Army
Property Number: 21199830243
Status: Unutilized
Directions: 2002–00, T2018–00, 2050–00
Comments:
Reasons: Secured Area; Within 2000 ft. of flammable or explosive material

2 Bldgs.
Radford Army Ammunition Plant
Radford VA 24141
Landholding Agency: Army
Property Number: 21199830244
Status: Unutilized
Directions: B2518–00, A2519–00
Comments:
Reasons: Secured Area; Within 2000 ft. of flammable or explosive material

Radford Army Ammunition Plant
Radford VA 24141
Landholding Agency: Army
Property Number: 21199830245
Status: Unutilized
Directions: A3553–00, C3553–00
Comments:
Reasons: Within 2000 ft. of flammable or explosive material; Secured Area

Bldg. A3561–00
Radford Army Ammunition Plant
Radford VA 24141
Landholding Agency: Army
Property Number: 21199830246
Status: Unutilized
Directions:
Comments:
Reasons: Within 2000 ft. of flammable or explosive material; Secured Area

Bldg. 3602–00
Radford Army Ammunition Plant
Radford VA 24141
Landholding Agency: Army
Property Number: 21199830247
Status: Unutilized
Directions:
Comments:
Reasons: Secured Area; Within 2000 ft. of flammable or explosive material

Radford Army Ammunition Plant
Radford VA 24141
Landholding Agency: Army
Property Number: 21199830248
Status: Unutilized
Directions: 3641–00, 3647–00, A3647–00, B3647–00
Comments:
Reasons: Secured Area; Within 2000 ft. of flammable or explosive material

6 Bldgs.
Radford Army Ammunition Plant
Radford VA 24141
Landholding Agency: Army
Property Number: 21199830249
Status: Unutilized
Directions: 3648–00, A3648–00, B3648–00, A3649–00, B3649–00, 3650–00
Comments:
Reasons: Within 2000 ft. of flammable or explosive material; Secured Area

4 Bldgs.
Radford Army Ammunition Plant
Radford VA 24141
Landholding Agency: Army
Property Number: 21199830250
Status: Unutilized
Directions: A3670–00, C3670–00, A3676–00, B3676–00
Comments:
Reasons: Within 2000 ft. of flammable or explosive material; Secured Area

Bldg. 3727–00
Radford Army Ammunition Plant
Radford VA 24141
Landholding Agency: Army
Property Number: 21199830251
Status: Unutilized
Directions:
Comments:
Reasons: Within 2000 ft. of flammable or explosive material; Secured Area

Bldg. 3901–00
Radford Army Ammunition Plant
Radford VA 24141
Landholding Agency: Army
Property Number: 21199830252
Status: Unutilized
Directions:
Comments:
Reasons: Within 2000 ft. of flammable or explosive material; Secured Area

4 Bldgs.
Radford Army Ammunition Plant
Radford VA 24141
Landholding Agency: Army
Property Number: 21199830253
Status: Unutilized
Directions: 4000–00, 4017–00, 4023–00, 4024–00
Comments:
Reasons: Secured Area; Within 2000 ft. of flammable or explosive material

3 Bldgs.
Radford Army Ammunition Plant
Radford VA 24141
Landholding Agency: Army
Property Number: 21199830254
Status: Unutilized
Directions: 4334–00, 4339–26, 4339–36
Comments:
Reasons: Within 2000 ft. of flammable or explosive material; Secured Area

3 Bldgs.
Radford Army Ammunition Plant
Radford VA 24141
Landholding Agency: Army
Property Number: 21199830255
Status: Unutilized
Directions: 4703–00, 4708–00, 4712–00
Comments:
Reasons: Secured Area; Within 2000 ft. of flammable or explosive material

7 Bldgs.
Radford Army Ammunition Plant
Radford VA 24141
Landholding Agency: Army
Property Number: 21199830256
Status: Unutilized
Directions: A4909–04, B4909–04, C4909–04, B4910–04, A4911–02, B4911–02, C4911–02
Comments:
Reasons: Secured Area; Within 2000 ft. of flammable or explosive material

15 Bldgs.
Radford Army Ammunition Plant
Radford VA 24141
Landholding Agency: Army
Property Number: 21199830257
Status: Unutilized
Directions: B4912–10, C4912–10, 4912–11, A4912–11, 4912–12, A4912–12, B4912–12, C4912–12, 4912–32, A4912–32, B4912–32, 4912–38, A4912–38, 4912–47, A4912–47
Comments:
Reasons: Within 2000 ft. of flammable or explosive material; Secured Area

2 Bldgs.
Radford Army Ammunition Plant
Radford VA 24141
Landholding Agency: Army
Property Number: 21199830258
Status: Unutilized
Directions: 4915–00, A4915–00
Comments:
Reasons: Secured Area; Within 2000 ft. of flammable or explosive material

4 Bldgs.
Radford Army Ammunition Plant
Radford VA 24141
Landholding Agency: Army
Property Number: 21199830259
Status: Unutilized
Directions: 4922–00, A4924–02, 4924–07, 4928–00
Comments:
Reasons: Within 2000 ft. of flammable or explosive material; Secured Area

3 Bldgs.
Radford Army Ammunition Plant
Radford VA 24141
Landholding Agency: Army
Property Number: 21199830260
Status: Unutilized
Directions: A4945–02, B4945–02, 4951–06
Comments:
Reasons: Within 2000 ft. of flammable or explosive material; Secured Area

3 Bldgs.
Radford Army Ammunition Plant
Radford VA 24141
Landholding Agency: Army
Property Number: 21199830261
Status: Unutilized
Directions: 5002–00, 5020–00, 5027–00
Comments:
Reasons: Secured Area; Within 2000 ft. of flammable or explosive material

6 Bldgs.
Radford Army Ammunition Plant
Radford VA 24141
Landholding Agency: Army
Property Number: 21199830262
Status: Unutilized
Directions: A5500–00, B5500–00, C5500–00, A5501–00, 5503–00, A5503–00
Comments:
Reasons: Within 2000 ft. of flammable or explosive material; Secured Area

3 Bldgs.
Radford Army Ammunition Plant
Radford VA 24141
Landholding Agency: Army
Property Number: 21199830263
Status: Unutilized
Directions: 5510–00, 5511–00, 5512–00
Comments:
Reasons: Within 2000 ft. of flammable or explosive material; Secured Area

6 Bldgs.
Radford Army Ammunition Plant
Radford VA 24141
Landholding Agency: Army
Property Number: 21199830264
Status: Unutilized
Directions: 7100–00, A7102–02, B7102–02, 7105–00, A7105–00, 7120–02
Comments:
Reasons: Within 2000 ft. of flammable or explosive material; Secured Area

10 Bldgs.
Radford Army Ammunition Plant
Radford VA 24141
Landholding Agency: Army
Property Number: 21199830265
Status: Unutilized
Directions: 9200–00, 9201–00, 9202–00, 9204–00, 9208–00, 9212–00, 9215–00, 9216–00, 9217–00, 9218–00
Comments:
Reasons: Within 2000 ft. of flammable or explosive material; Secured Area

2 Bldgs.
Radford Army Ammunition Plant
Radford VA 24141
Landholding Agency: Army
Property Number: 21199830267
Status: Unutilized
Directions: 9470–00, 9478–00
Comments:
Reasons: Secured Area; Within 2000 ft. of flammable or explosive material

Bldg. C3677–00
Radford AAP
Radford VA 24141
Landholding Agency: Army
Property Number: 21200020079
Status: Unutilized
GSA Number:
Reasons: Secured Area; Within 2000 ft. of flammable or explosive material

Bldg. 5504–00
Radford AAP
Radford VA 24141
Landholding Agency: Army
Property Number: 21200020080
Status: Unutilized
GSA Number:
Reasons: Secured Area; Within 2000 ft. of flammable or explosive material

Bldg. 7503–00
Radford AAP
Radford VA 24141
Landholding Agency: Army
Property Number: 21200020081
Status: Unutilized
GSA Number:
Reasons: Secured Area; Within 2000 ft. of flammable or explosive material

Bldg. 2393
Fort Belvoir
Ft. Belvoir VA 22060–5227
Landholding Agency: Army
Property Number: 21200130076
Status: Unutilized
GSA Number:
Reasons: Extensive deterioration

Bldgs. 3074, 3075
Fort Belvoir
Ft. Belvoir VA 22060–5110
Landholding Agency: Army
Property Number: 21200130077
Status: Unutilized
GSA Number:
Reasons: Extensive deterioration

Bldg. A0415
Radford AAP
Radford VA 24143–0100
Landholding Agency: Army
Property Number: 21200230038
Status: Unutilized
GSA Number:
Reasons: Secured Area

Bldg. 00200
Radford Army Amo Plant
Radford VA 24143–0100
Landholding Agency: Army
Property Number: 21200240071
Status: Unutilized
GSA Number:
Reasons: Secured Area; Within 2000 ft. of flammable or explosive material

Bldg. T4022
Radford Army Amo Plant
Radford VA 24143–0100
Landholding Agency: Army
Property Number: 21200240072
Status: Unutilized
GSA Number:
Reasons: Within 2000 ft. of flammable or explosive material; Extensive deterioration; Secured Area

Bldg. 00723
Fort Story
Ft. Story VA 23459
Landholding Agency: Army
Property Number: 21200310046
Status: Unutilized
GSA Number:
Reasons: Extensive deterioration

Bldg. T0304
Fort AP Hill
Bowling Green VA 22427
Landholding Agency: Army
Property Number: 21200410069
Status: Unutilized
Reasons: Extensive deterioration

Bldg. 00306
Fort AP Hill
Bowling Green VA 22427
Landholding Agency: Army
Property Number: 21200410070
Status: Unutilized
Reasons: Extensive deterioration

4 Bldgs.
Fort AP Hill
S0308, S0309, S0311, S0312
Bowling Green VA 22427
Landholding Agency: Army
Property Number: 21200410071
Status: Unutilized
Reasons: Extensive deterioration

Bldg. T0312
Fort AP Hill
Bowling Green VA 22427
Landholding Agency: Army
Property Number: 21200410072
Status: Unutilized
Reasons: Extensive deterioration

Bldg. 00314
Fort AP Hill
Bowling Green VA 22427
Landholding Agency: Army
Property Number: 21200410073
Status: Unutilized
Reasons: Extensive deterioration

Bldg. 01105
Fort AP Hill
Bowling Green VA 22427
Landholding Agency: Army
Property Number: 21200410076
Status: Unutilized
Reasons: Extensive deterioration

Bldgs. 00151, T0515
Fort A.P. Hill
Ft. A.P. Hill VA 22427–3114
Landholding Agency: Army
Property Number: 21200430057
Status: Unutilized
Reasons: Extensive deterioration

Bldg. 00222
Radford Army Ammo Plant
Radford VA 24143
Landholding Agency: Army
Property Number: 21200510045
Status: Unutilized
Reasons: Secured Area

Bldgs. 22127, 22128
Radford Army Ammo Plant
Radford VA 24143
Landholding Agency: Army
Property Number: 21200510046
Status: Unutilized
Reasons: Secured Area

Bldg. 00677
Fort Belvoir
Fairfax VA 22060
Landholding Agency: Army
Property Number: 21200710043
Status: Unutilized
Reasons: Extensive deterioration

Bldgs. 00705, 00706, 00771
Fort Belvoir
Fairfax VA 22060
Landholding Agency: Army
Property Number: 21200710044
Status: Unutilized
Reasons: Extensive deterioration

Bldgs. 01112, 01139
Fort Belvoir
Fairfax VA 22060
Landholding Agency: Army
Property Number: 21200710045
Status: Unutilized
Reasons: Extensive deterioration

5 Bldgs.
Fort Belvoir
Fairfax VA 22060
Landholding Agency: Army
Property Number: 21200710046
Status: Unutilized
Directions: 01141, 01146, 01147, 01148, 01153
Reasons: Extensive deterioration

Bldgs. 3065–3071
Fort Belvoir
Fairfax VA 22060
Landholding Agency: Army
Property Number: 21200710047
Status: Unutilized
Reasons: Extensive deterioration

Bldgs. 3086, 3087, 3099
Fort Belvoir
Fairfax VA 22060
Landholding Agency: Army
Property Number: 21200710048
Status: Unutilized
Reasons: Extensive deterioration

Bldgs. 05089, 05093, 05099
Fort Belvoir
Fairfax VA 22060
Landholding Agency: Army

Property Number: 21200710049
Status: Unutilized
Reasons: Extensive deterioration

4 Bldgs.
Fort Belvoir
Fairfax VA 22060
Landholding Agency: Army
Property Number: 21200720043
Status: Unutilized
Directions: 0629, 0630, 00704, 00771
Reasons: Extensive deterioration

Bldgs. 01147, 01148
Fort Belvoir
Fairfax VA 22060
Landholding Agency: Army
Property Number: 21200720044
Status: Unutilized
Reasons: Extensive deterioration

4 Bldgs.
Fort Belvoir
Fairfax VA 22060
Landholding Agency: Army
Property Number: 21200720045
Status: Unutilized
Directions: 05002, 05009, 05010, 05014
Reasons: Extensive deterioration

5 Bldgs.
Fort Belvoir
Fairfax VA 22060
Landholding Agency: Army
Property Number: 21200720046
Status: Unutilized
Directions: 05033, 05034, 05035, 05036, 05037
Reasons: Extensive deterioration

Bldgs. 05040, 05043
Fort Belvoir
Fairfax VA 22060
Landholding Agency: Army
Property Number: 21200720047
Status: Unutilized
Reasons: Extensive deterioration

4 Bldgs.
Fort Belvoir
Fairfax VA 22060
Landholding Agency: Army
Property Number: 21200720048
Status: Unutilized
Directions: 05065, 05066, 05067, 05069
Reasons: Extensive deterioration

6 Bldgs.
Fort Belvoir
Fairfax VA 22060
Landholding Agency: Army
Property Number: 21200720049
Status: Unutilized
Directions: 05071, 05072, 05073, 05075, 05076, 05077
Reasons: Extensive deterioration

Bldgs. 05081, 05088
Fort Belvoir
Fairfax VA 22060
Landholding Agency: Army
Property Number: 21200720050
Status: Unutilized
Reasons: Extensive deterioration

7 Bldgs.
Fort Belvoir
Fairfax VA 22060
Landholding Agency: Army
Property Number: 21200720051
Status: Unutilized
Directions: 05090, 05092, 05094, 05095, 05096, 05097, 05098
Reasons: Extensive deterioration

Bldgs. US042, US044, US45B
Radford AAP
Montgomery VA 24013
Landholding Agency: Army
Property Number: 21200740031
Status: Underutilized
Reasons: Secured Area; Within 2000 ft. of flammable or explosive material

Bldg. 01001
Radford AAP
Montgomery VA 24013
Landholding Agency: Army
Property Number: 21200740032
Status: Underutilized
Reasons: Within 2000 ft. of flammable or explosive material; Secured Area

5 Bldgs.
Radford Army Ammo Plant
Radford VA 24143
Landholding Agency: Army
Property Number: 21200740169
Status: Unutilized
Directions: 19980, 25710, 36020, 36370, 36380
Reasons: Secured Area; Within 2000 ft. of flammable or explosive material

4 Bldgs.
Radford Army Ammo Plant
Radford VA 24143
Landholding Agency: Army
Property Number: 21200740170
Status: Unutilized
Directions: 36410, 36470, 36500, 37060
Reasons: Within 2000 ft. of flammable or explosive material; Secured Area

Bldgs. 50020, 50200
Radford Army Ammo Plant
Radford VA 24143
Landholding Agency: Army
Property Number: 21200740171
Status: Unutilized
Reasons: Within 2000 ft. of flammable or explosive material; Secured Area

Bldgs. P3510, P3515
Fort Eustis
Ft. Eustis VA 23604
Landholding Agency: Army
Property Number: 21200810035
Status: Unutilized
Reasons: Extensive deterioration

4 Bldgs.
Fort Story
Ft. Story VA 23459
Landholding Agency: Army
Property Number: 21200810037
Status: Unutilized
Directions: T0540, T0750, T0753, T0762
Reasons: Extensive deterioration

Bldgs. 01140, 01154
Fort Belvoir
Fairfax VA 22060
Landholding Agency: Army
Property Number: 21200810042
Status: Unutilized
Reasons: Extensive deterioration

Bldgs. 05015, 05021
Fort Belvoir
Fairfax VA 22060
Landholding Agency: Army
Property Number: 21200810043
Status: Unutilized
Reasons: Extensive deterioration

Bldg. T2837
Fort Pickett
Blackstone VA 23824
Landholding Agency: Army
Property Number: 21200820015
Status: Unutilized
Reasons: Secured Area; Extensive deterioration

11 Bldgs.
Fort Eustis
Ft. Eustis VA 23604
Landholding Agency: Army
Property Number: 21200820027
Status: Unutilized
Directions: S2731, S2732, S2751, S2752, S2753, S2754, S2755, S2756, S2757, S2758, S2759
Reasons: Extensive deterioration

9 Bldgs.
Ft. A.P. Hill
Caroline VA 22427
Landholding Agency: Army
Property Number: 21200820030
Status: Unutilized
Directions: T0708, S0718, S0719, S0720, S0721, S0722, S0723, S0724, S0726
Reasons: Secured Area; Extensive deterioration

8 Bldgs.
Ft. A.P. Hill
Caroline VA 22427
Landholding Agency: Army
Property Number: 21200820031
Status: Unutilized
Directions: 0846A, 0854A, AS903, A0904, A0912, 00916, 00924, 00980
Reasons: Secured Area; Extensive deterioration

7 Bldgs.
Ft. A.P. Hill
Caroline VA 22427
Landholding Agency: Army
Property Number: 21200820032
Status: Unutilized
Directions: 01107, 01213, 01213, S1259, S1267, 01447, TPPAD
Reasons: Extensive deterioration; Secured Area

Bldg. P0545
Fort Story
Ft. Story VA 23459
Landholding Agency: Army
Property Number: 21200830040
Status: Unutilized
Reasons: Extensive deterioration

Bldg. C0903
Fort A.P. Hill
Bowling Green VA 22427
Landholding Agency: Army
Property Number: 21200840054
Status: Unutilized
Reasons: Extensive deterioration

Bldgs. 00187, 00189, 00707
Fort Belvoir
Fairfax VA 22060
Landholding Agency: Army
Property Number: 21200840056
Status: Underutilized
Reasons: Secured Area

6 Bldgs.
Fort A.P. Hill
Bowling Green VA 22427
Landholding Agency: Army
Property Number: 21200920072
Status: Unutilized

Directions: T0807, T0811, T0815, T0816, T0817, T0818
Reasons: Extensive deterioration

Bldgs. 735–1, 01001
Radford Army Ammo Plant
Radford VA 24143
Landholding Agency: Army
Property Number: 21200920075
Status: Unutilized
Reasons: Within 2000 ft. of flammable or explosive material; Secured Area

Bldg. T0514
Fort Story
Ft. Story VA 23459
Landholding Agency: Army
Property Number: 21200920077
Status: Unutilized
Reasons: Extensive deterioration

4 Bldgs.
Radford Army Ammo Plant
Radford VA 24143
Landholding Agency: Army
Property Number: 21200930028
Status: Unutilized
Directions: 1030, 1031, 1038, 1044
Reasons: Within 2000 ft. of flammable or explosive material; Secured Area

8 Bldgs.
Radford Army Ammo Plant
Radford VA 24413
Landholding Agency: Army
Property Number: 21200930029
Status: Unutilized
Directions: 2019, 2019A, 2022A, 2024, 2024A, 2031, 2031A, 4730
Reasons: Within 2000 ft. of flammable or explosive material; Secured Area

Bldgs. 1000, 2000, 2010
Radford AAP
Montgomery VA 24143
Landholding Agency: Army
Property Number: 21200940038
Status: Unutilized
Reasons: Within 2000 ft. of flammable or explosive material; Secured Area

Bldgs. 1106, 1109, 1110
Fort Belvoir
Fairfax VA 22060
Landholding Agency: Army
Property Number: 21201010037
Status: Unutilized
Reasons: Extensive deterioration

4 Bldgs.
Radford Army Ammo Plant
Montgomery VA 24013
Landholding Agency: Army
Property Number: 21201010038
Status: Unutilized
Directions: US042, US044, US45B, 51565
Reasons: Secured Area; Within 2000 ft. of flammable or explosive material

Bldgs. P1126, P1131
Fort Eustis
Fort Eustis VA 23604
Landholding Agency: Army
Property Number: 21201010044
Status: Unutilized
Reasons: Extensive deterioration

8 Bldgs.
Hampton Readiness Center
Hampton VA 23666
Landholding Agency: Army
Property Number: 21201020026
Status: Unutilized
Directions: 8, 9, 10, 12, 13, 14, 15, 23
Reasons: Extensive deterioration

Bldgs. S0001, S0002
Defense Supply Center
Richmond VA
Landholding Agency: Army
Property Number: 21201020035
Status: Unutilized
Reasons: Secured Area

4 Bldgs.
Radford AAP
Montgomery VA 24143
Landholding Agency: Army
Property Number: 21201030030
Status: Unutilized
Directions: 1002, 1003, 1026, 1045
Reasons: Within 2000 ft. of flammable or explosive material; Secured Area

9 Bldgs.
Radford AAP
Montgomery VA 24143
Landholding Agency: Army
Property Number: 21201030031
Status: Unutilized
Directions: 1618A, 1618C, 1622, 1621A, 1621B, 1621C, 1622A, 1622B, 1622C
Reasons: Within 2000 ft. of flammable or explosive material; Secured Area

16 Bldgs.
Radford AAP
Montgomery VA 24143
Landholding Agency: Army
Property Number: 21201030032
Status: Unutilized
Directions: 1666A, 1666B, 1668A, 1671A, 1671B, 1672A, 1672B, 1674, 1674A, 1674B, 1675, 1675A, 1675B, 1676, 1676A, 1676B
Reasons: Within 2000 ft. of flammable or explosive material; Secured Area

12 Bldgs.
Radford AAP
Montgomery VA 24143
Landholding Agency: Army
Property Number: 21201030033
Status: Unutilized
Directions: 1751, 1754, 1762, 1765, 2002, 2003, 2007, 2026, 2047, 2048, 2049, 2050A
Reasons: Within 2000 ft. of flammable or explosive material; Secured Area

10 Bldgs.
Radford AAP
Montgomery VA 24143
Landholding Agency: Army
Property Number: 21201030034
Status: Unutilized
Directions: 3621, 3652, 3655, 3658, 3675, 3675B, 3675C, 3678A, 3678B, 3678C
Reasons: Within 2000 ft. of flammable or explosive material; Secured Area

6 Bldgs.
Radford AAP
Montgomery VA 24143
Landholding Agency: Army
Property Number: 21201030035
Status: Unutilized
Directions: 4703, 9101A, 9101B, 9102A, 9102B, 9103B
Reasons: Within 2000 ft. of flammable or explosive material; Secured Area

9 Bldgs.
Radford AAP
Montgomery VA 24143
Landholding Agency: Army
Property Number: 21201030036
Status: Unutilized
Directions: 49102, 49103, 49126, 71022, 71032, 72215, 91248, 91253, 91254
Reasons: Within 2000 ft. of flammable or explosive material; Secured Area

23 Bldgs.
Radford AAP
Montgomery VA 24143
Landholding Agency: Army
Property Number: 21201030037
Status: Unutilized
Directions: 98023, 98024, 98030, 98035, 98045, 98046, 98048, 98056, 98059, 98104, 98105, 98125, 98126, 98129, 98130, 98133, 98138, 98139, 98141, 98167, 98185, 98186, 98189
Reasons: Within 2000 ft. of flammable or explosive material; Secured Area

18 Bldgs.
Radford AAP
Montgomery VA 24143
Landholding Agency: Army
Property Number: 21201030038
Status: Unutilized
Directions: 98206, 98209, 98216, 98217, 98218, 98224, 98226, 98227, 98231, 98232, 98242, 98244, 98280, 98289, 98291, 98294, 98297, 98298
Reasons: Within 2000 ft. of flammable or explosive material; Secured Area

8 Bldgs.
Radford AAP
Montgomery VA 24143
Landholding Agency: Army
Property Number: 21201030039
Status: Unutilized
Directions: 98303, 98304, 98307, 98327, 98332, 98347, 98348, 98364
Reasons: Within 2000 ft. of flammable or explosive material; Secured Area

5 Bldgs.
Fort A.P. Hill
Bowling Green VA 22427
Landholding Agency: Army
Property Number: 21201040031
Status: Unutilized
Directions: 1105, 1218, 1274, 1293, 1296
Reasons: Extensive deterioration

Bldg. ANTEN
Fort Eustis
Ft. Eustis VA 23604
Landholding Agency: Army
Property Number: 21201040032
Status: Unutilized
Reasons: Extensive deterioration

Bldgs. 1132, 1133, 1134
Fort Belvoir
Fairfax VA 22060
Landholding Agency: Army
Property Number: 21201040033
Status: Excess
Reasons: Extensive deterioration

6 Bldgs.
Radford AAP
Radford VA 24143
Landholding Agency: Army
Property Number: 21201040036
Status: Unutilized
Directions: 1000, 1010, 2000, 2010, 22116, USO43
Reasons: Within 2000 ft. of flammable or explosive material; Secured Area

1618B
Radford Army Ammo Plant

Rte 114, P.O. Box 2
Radford VA
Landholding Agency: Army
Property Number: 21201110007
Status: Unutilized
Reasons: Secured Area

Bldg. 00704
Blue Grass Army Depot
Richmond VA
Landholding Agency: Army
Property Number: 21201120034
Status: Underutilized
Reasons: Extensive deterioration

Bldg 1618B
Rte. 114, P.O. Box 2
Radford Army Ammo Plant
Radford VA 24143
Landholding Agency: Army
Property Number: 21201120063
Status: Unutilized
Reasons: Secured Area; Within 2000 ft. of flammable or explosive material Not accessible by road

Bldg 1621
Rte., P.O. Box 2
Radford Army Ammo Plant
Radford VA 24143
Landholding Agency: Army
Property Number: 21201120064
Status: Unutilized
Reasons: Secured Area; Contamination Not accessible by road

Bldg. 98241
Rte. 114, P.O. Box 2
Radford Army Ammunition Plant
Radford VA
Landholding Agency: Army
Property Number: 21201120065
Status: Unutilized
Reasons: Not accessible by road; Within 2000 ft. of flammable or explosive material; Secured Area

Bldg. 00222
Rte. 114, P.O. Box 2
Radford VA
Landholding Agency: Army
Property Number: 21201130008
Status: Excess
Reasons: Within 2000 ft. of flammable or explosive material; Secured Area

Bldg. 00731
null
Radford VA
Landholding Agency: Army
Property Number: 21201130009
Status: Excess
Reasons: Extensive deterioration; Within 2000 ft. of flammable or explosive material; Secured Area

Bldg. 0731A
Rte 114, P.O. Box 2
Radford VA
Landholding Agency: Army
Property Number: 21201130011
Status: Excess
Reasons: Within 2000 ft. of flammable or explosive material; Secured Area; Extensive deterioration

Bldg. 07352
null
Radford VA 24143
Landholding Agency: Army
Property Number: 21201130012
Status: Unutilized
Reasons: Within 2000 ft. of flammable or explosive material; Extensive deterioration; Secured Area

Bldgs. 00736 & 0736A
null
Radford VA 24143
Landholding Agency: Army
Property Number: 21201130013
Status: Excess
Reasons: Extensive deterioration; Secured Area; Within 2000 ft. of flammable or explosive material

Bldg. 47052
null
Radford VA 24143
Landholding Agency: Army
Property Number: 21201130014
Status: Underutilized
Reasons: Secured Area; Within 2000 ft. of flammable or explosive material; Extensive deterioration

4 Bldgs.
8000 Jefferson Davis Hwy
Richmond VA 23297
Landholding Agency: Army
Property Number: 21201130027
Status: Underutilized
Directions: 00031, 00032, 00033, 00035
Reasons: Secured Area

Bldgs. 2302 & 2303
null
Fort Belvoir VA 22060
Landholding Agency: Army
Property Number: 21201130031
Status: Excess
Reasons: Secured Area

5 Bldgs.
Sandston Armory
Sandston VA 23150
Landholding Agency: Army
Property Number: 21201130053
Status: Unutilized
Directions: T3700, T3702, T3704, T4500, T4504
Reasons: Secured Area; Extensive deterioration

14 Bldgs.
Bldg. T0472
Fort Pickett Training Center
Blackstone VA 23824
Landholding Agency: Army
Property Number: 21201140036
Status: Excess
Directions: T0116, T0207, T0208, T0209, T0210, T0114, T0115, T0211, T0213, T0214, T0306, T0307, T0310, T0313
Reasons: Extensive deterioration Contamination; Secured Area

20 Bldgs.
null
Fort Pickett Training Center
Blackstone VA 23824
Landholding Agency: Army
Property Number: 21201140037
Status: Unutilized
Directions: T2807, T1312, T1317, T1319, T1348, T1349, T1350, T1351, T1352, T1353, T1356, T1360, T1361, T1362, T1808, T2304, T2305, T2306, T2800, T2801
Reasons: Contamination; Secured Area; Extensive deterioration

Bldg. A2304
Ft. Pickett Training Ctr.
Blackstone VA 23824
Landholding Agency: Army
Property Number: 21201140054
Status: Unutilized
Reasons: Secured Area; Extensive deterioration; Within 2000 ft. of flammable or explosive material

2 Bldgs.
Ft. Pickett Training Ctr.
Blackstone VA 23824
Landholding Agency: Army
Property Number: 21201140056
Status: Unutilized
Directions: T2806 and T2805
Reasons: Extensive deterioration; Secured Area; Within 2000 ft. of flammable or explosive material

2 Bldgs.
Ft. Pickett Training Ctr.
Blackstone VA 23824
Landholding Agency: Army
Property Number: 21201140058
Status: Unutilized
Directions: T2802 and T2803
Reasons: Within 2000 ft. of flammable or explosive material; Secured Area; Extensive deterioration

4 Bldgs.
8000 Jefferson Davis Hwy
Defense Supply Center
Richmond VA 23297
Landholding Agency: Army
Property Number: 21201140063
Status: Unutilized
Directions: 00091, 00006, 00007, 00010
Reasons: Secured Area

Bldg 00104
8000 Jefferson Davis Hwy
Richmond VA 23297
Landholding Agency: Army
Property Number: 21201140069
Status: Unutilized
Reasons: Secured Area

12 Bldgs.
Ft. Pickett Trng Ctr
Blackstone VA 23824
Landholding Agency: Army
Property Number: 21201210051
Status: Excess
Directions: T2823, T2826, T2828, T2829, T2838, T2860, T2861, T2856, T2862, T2863, T2864, T2865
Comments: Nat'l security concerns; no public access and no alternative method to gain access
Reasons: Secured Area

15 Bldgs.
Ft. Pickett Trng Ctr
Blackstone VA 23824
Landholding Agency: Army
Property Number: 21201220037
Status: Excess
Directions: T2864, T2565, R0065, R0066, R0067, R0068, R0078, R0108, R0109, R0110, R0112, R0113, R0114, R0215, R0233
Comments: Nat'l security concerns; public access and no alternative method to gain access w/out comprising nat'l security
Reasons: Secured Area

16 Bldgs.
Ft. Pickett Trng Ctr
Blackstone VA 23824
Landholding Agency: Army
Property Number: 21201220038

Status: Excess
Directions: T2814, T2815, T2816, T2817, T2823, T2826, T2827, T2828, T2829, T2838, T2841, T2856, T2860, T2861, T2863, T2862
Comments: Nat'l security concerns; public access denied & no alternative method to gain access w/out comprising nat'l security
Reasons: Secured Area

14 Bldgs.
Ft. Pickett Trng Ctr
Blackstone VA 23824
Landholding Agency: Army
Property Number: 21201220039
Status: Excess
Directions: T2632, T2633, T2635, T2636, T2638, T2639, T2646, T2647, T2639, T2642, T2643, T2644, T2646, T2647, T2648, T2649, T26811
Comments: Nat'l security concerns; public access denied and no alternative method to gain access w/out comprising nat'l security
Reasons: Secured Area

15 Bldgs.
Ft. Pickett Trng Ctr
Blackstone VA 23824
Landholding Agency: Army
Property Number: 21201220040
Status: Excess
Directions: T2616, T2617, T2818, T2620, T2621, T2622, T2623, T2624, T2625, T2626, T2627, T2628, T2629, T2630, T2631
Comments: Nat'l security concerns; public access denied and no alternative method to gain access w/out comprising nat'l security
Reasons: Secured Area

15 Bldgs.
Ft. Pickett Trng Ctr
Blackstone VA 23824
Landholding Agency: Army
Property Number: 21201220041
Status: Excess
Directions: R0234, R0235, T1650, T1651, T1653, T2022, T2023, T2024, T2238, T2376, T2604, T2612, T2613, T2614, T2615
Comments: Nat'l security concerns; public access denied and no alternative method to gain access w/out comprising nat'l security
Reasons: Secured Area

12 Bldgs.
Ft. Pickett Trng Ctr
Blackstone VA 23824
Landholding Agency: Army
Property Number: 21201220042
Status: Excess
Directions: A1811, AT306, AT307, R0013, R0014, R0021, R0026, R0027, R0040, R0055, R0063, R0064
Comments: Nat'l security concerns; public access denied and no alternative method to gain access w/out comprising nat'l security
Reasons: Secured Area

2 Buildings
Ft. Pickett Trng. Center
Ft. Pickett VA 23824
Landholding Agency: Army
Property Number: 21201230046
Status: Excess
Directions: T0113, T0220
Comments: Access control pts.; public access denied & no alternative method to gain access w/out comprising nat'l security
Reasons: Secured Area

2 Buildings
114 P.O. Box 2
Radford VA 24143
Landholding Agency: Army
Property Number: 21201230047
Status: Unutilized
Directions: 2045, 2046
Comments: Restricted area; public access denied & no alternative method to gain access w/out comprising nat'l security
Reasons: Secured Area

Washington

Bldg. 9577
Fort Lewis
Fort Lewis WA 98433
Landholding Agency: Army
Property Number: 21199610006
Status: Unutilized
Directions:
Comments:
Reasons: Extensive deterioration; Secured Area

Bldg. 9581
Fort Lewis
Fort Lewis WA 98433
Landholding Agency: Army
Property Number: 21199610009
Status: Unutilized
Directions:
Comments:
Reasons: Secured Area; Extensive deterioration

Bldg. 9579
Fort Lewis
Fort Lewis WA 98433
Landholding Agency: Army
Property Number: 21199610010
Status: Unutilized
Directions:
Comments:
Reasons: Secured Area; Extensive deterioration

4 Buildings
Fort Lewis
Fort Lewis WA 98433
Landholding Agency: Army
Property Number: 21199610045
Status: Unutilized
Directions: B0622, C0618, C1326, 4133
Comments:
Reasons: Secured Area; Extensive deterioration

Officer's Quarters B1111
Fort Lewis
Fort Lewis WA 98433
Landholding Agency: Army
Property Number: 21199610046
Status: Unutilized
Directions:
Comments:
Reasons: Extensive deterioration; Secured Area

Bldg. 2414
Fort Lewis
Ft. Lewis WA 98433
Landholding Agency: Army
Property Number: 21199620512
Status: Unutilized
Directions:
Comments:
Reasons: Extensive deterioration

Bldg. 2416
Fort Lewis
Ft. Lewis WA 98433
Landholding Agency: Army
Property Number: 21199620514
Status: Unutilized
Directions:
Comments:
Reasons: Extensive deterioration

Bldg. 9639
Fort Lewis
Ft. Lewis WA 98433
Landholding Agency: Army
Property Number: 21199620516
Status: Unutilized
Directions:
Comments:
Reasons: Extensive deterioration

Bldg. A01011
Fort Lewis
Ft. Lewis WA 98433
Landholding Agency: Army
Property Number: 21199620517
Status: Unutilized
Directions:
Comments:
Reasons: Extensive deterioration

Bldg. U091B, Fort Lewis
null
Ft. Lewis WA 98433
Landholding Agency: Army
Property Number: 21199640193
Status: Unutilized
Directions:
Comments:
Reasons: Extensive deterioration

Bldg. C0111
Fort Lewis
Ft. Lewis WA 98433
Landholding Agency: Army
Property Number: 21199720142
Status: Unutilized
Directions:
Comments:
Reasons: Extensive deterioration

Bldg. C0128
Fort Lewis
Ft. Lewis WA 98433
Landholding Agency: Army
Property Number: 21199720144
Status: Unutilized
Directions:
Comments:
Reasons: Extensive deterioration

Bldg. C1243
Fort Lewis
Ft. Lewis WA 98433
Landholding Agency: Army
Property Number: 21199720145
Status: Unutilized
Directions:
Comments:
Reasons: Extensive deterioration

Bldg. 8276
Fort Lewis
Ft. Lewis WA 98433
Landholding Agency: Army
Property Number: 21199720151
Status: Unutilized
Directions:
Comments:
Reasons: Extensive deterioration

Bldg. HBC07, Fort Lewis
Huckleberry Creek Mountain Training Site
WA
Landholding Agency: Army
Property Number: 21199740166

Status: Unutilized
Directions:
Comments:
Reasons: Extensive deterioration

Bldg. F0001
Fort Lewis
Ft. Lewis WA 98433
Landholding Agency: Army
Property Number: 21199810205
Status: Unutilized
Directions:
Comments:
Reasons: Extensive deterioration

Bldg. C0149
Fort Lewis
Ft. Lewis WA 98433
Landholding Agency: Army
Property Number: 21199810206
Status: Unutilized
Directions:
Comments:
Reasons: Extensive deterioration

Bldg. C0153
Fort Lewis
Ft. Lewis WA 98433
Landholding Agency: Army
Property Number: 21199810207
Status: Unutilized
Directions:
Comments:
Reasons: Extensive deterioration

Bldg. A0336
Fort Lewis
Ft. Lewis WA 98433
Landholding Agency: Army
Property Number: 21199810210
Status: Unutilized
Directions:
Comments:
Reasons: Extensive deterioration

Bldg. EO708
Fort Lewis
Ft. Lewis WA 98433
Landholding Agency: Army
Property Number: 21199810214
Status: Unutilized
Directions:
Comments:
Reasons: Extensive deterioration

Bldg. 1015
Fort Lewis
Ft. Lewis WA 98433
Landholding Agency: Army
Property Number: 21199810219
Status: Unutilized
Directions:
Comments:
Reasons: Extensive deterioration

Bldg. B1231
Fort Lewis
Ft. Lewis WA 98433
Landholding Agency: Army
Property Number: 21199810221
Status: Unutilized
Directions:
Comments:
Reasons: Extensive deterioration

Bldg. C1231
Fort Lewis
Ft. Lewis WA 98433
Landholding Agency: Army
Property Number: 21199810222
Status: Unutilized
Directions:
Comments:
Reasons: Extensive deterioration

Bldg. 5163
Fort Lewis
Ft. Lewis WA 98433
Landholding Agency: Army
Property Number: 21199810224
Status: Unutilized
Directions:
Comments:
Reasons: Extensive deterioration

Bldg. 5220
Fort Lewis
Ft. Lewis WA 98433
Landholding Agency: Army
Property Number: 21199810227
Status: Unutilized
Directions:
Comments:
Reasons: Extensive deterioration

Bldg. 5225
Fort Lewis
Ft. Lewis WA 98433
Landholding Agency: Army
Property Number: 21199810229
Status: Unutilized
Directions:
Comments:
Reasons: Extensive deterioration

Bldg. 5236
Fort Lewis
Ft. Lewis WA 98433
Landholding Agency: Army
Property Number: 21199810235
Status: Unutilized
Directions:
Comments:
Reasons: Extensive deterioration

Bldg. 6021
Fort Lewis
Ft. Lewis WA 98433
Landholding Agency: Army
Property Number: 21199810236
Status: Unutilized
Directions:
Comments:
Reasons: Extensive deterioration

Bldg. 6032
Fort Lewis
Ft. Lewis WA 98433
Landholding Agency: Army
Property Number: 21199810238
Status: Unutilized
Directions:
Comments:
Reasons: Extensive deterioration

Bldg. 6991
Fort Lewis
Ft. Lewis WA 98433
Landholding Agency: Army
Property Number: 21199810242
Status: Unutilized
Directions:
Comments:
Reasons: Extensive deterioration

Bldg. 9650
Fort Lewis
Ft. Lewis WA 98433
Landholding Agency: Army
Property Number: 21199820132
Status: Unutilized
Directions:
Comments:
Reasons: Extensive deterioration

Bldg. 415
Fort Worden
Port Angeles WA 98362
Landholding Agency: Army
Property Number: 21199910062
Status: Excess
GSA Number:
Reasons: Extensive deterioration

Bldg. B0198
Fort Lewis
Ft. Lewis WA 98433–9500
Landholding Agency: Army
Property Number: 21199910064
Status: Excess
GSA Number:
Reasons: Extensive deterioration

Bldg. E1306
Fort Lewis
Ft. Lewis WA 98433–9500
Landholding Agency: Army
Property Number: 21199910072
Status: Excess
GSA Number:
Reasons: Extensive deterioration

Bldg. 9627
Fort Lewis
Ft. Lewis WA 98433–9500
Landholding Agency: Army
Property Number: 21199910078
Status: Excess
GSA Number:
Reasons: Extensive deterioration

Bldg. U515A
Fort Lewis
Ft. Lewis WA 98433
Landholding Agency: Army
Property Number: 21199920124
Status: Excess
GSA Number:
Reasons: Other—gas chamber

4 Bldgs.
Fort Lewis
Ft. Lewis WA 98433
Landholding Agency: Army
Property Number: 21199920125
Status: Excess
GSA Number:
Directions: 001PE, 001ED, 003ED, 002ED
Reasons: Extensive deterioration

7 Bldgs.
Fort Lewis
Ft. Lewis WA 98433
Landholding Agency: Army
Property Number: 21199920131
Status: Unutilized
GSA Number:
Directions: A0124, A0133, D1114, D1124, A0135, J0200, J0202
Reasons: Extensive deterioration

Bldg. A0338
Fort Lewis
Ft. Lewis WA 98433
Landholding Agency: Army
Property Number: 21199920133
Status: Excess
GSA Number:
Reasons: Extensive deterioration

Bldg. A0456
Fort Lewis
Ft. Lewis WA 98433
Landholding Agency: Army
Property Number: 21199920138
Status: Excess
GSA Number:

Reasons: Extensive deterioration

33 Bldgs.
Fort Lewis
Ft. Lewis WA 98433
Landholding Agency: Army
Property Number: 21199920143
Status: Excess
GSA Number:
Directions: D0704–D0709, D0728–D0733, D0804–D0809, D0828–D0833, D1106, D1117–D1118, D1143, D1151, D1158–D1160, D1163
Reasons: Extensive deterioration

7 Bldgs.
Fort Lewis
Ft. Lewis WA 98433
Landholding Agency: Army
Property Number: 21199920151
Status: Excess
GSA Number:
Directions: D1107, D1152, E1121, D1125, D1132, D1135, D1143
Reasons: Extensive deterioration

Bldgs. 1202, B1202, 1203
Fort Lewis
Ft. Lewis WA 98433
Landholding Agency: Army
Property Number: 21199920153
Status: Excess
GSA Number:
Reasons: Extensive deterioration

8 Bldgs.
Fort Lewis
Ft. Lewis WA 98433
Landholding Agency: Army
Property Number: 21199920157
Status: Unutilized
GSA Number:
Directions: 1322, 3016, 3070, 1323, 9663, C1341, C1342, C1343
Reasons: Extensive deterioration

Bldg. A1401
Fort Lewis
Ft. Lewis WA 98433
Landholding Agency: Army
Property Number: 21199920158
Status: Unutilized
GSA Number:
Reasons: Extensive deterioration

5 Bldgs.
Fort Lewis
Ft. Lewis WA 98433
Landholding Agency: Army
Property Number: 21199920159
Status: Unutilized
GSA Number:
Directions: A1411, A1413, A1415, A1420, 1444
Reasons: Extensive deterioration

4 Bldgs.
Fort Lewis
Ft. Lewis WA 98433
Landholding Agency: Army
Property Number: 21199920164
Status: Unutilized
GSA Number:
Directions: 3092, 3101, 03094, 03097
Reasons: Extensive deterioration

8 Bldgs.
Fort Lewis
Ft. Lewis WA 98433
Landholding Agency: Army
Property Number: 21199920165
Status: Unutilized
GSA Number:
Directions: 03109, 03217, 04295, 3210, 3240, 03276, 03658, 3725
Reasons: Extensive deterioration

4 Bldgs.
Fort Lewis
Ft. Lewis WA 98433
Landholding Agency: Army
Property Number: 21199920173
Status: Unutilized
GSA Number:
Directions: 7908, 07984, 7985, 08071
Reasons: Extensive deterioration

Bldgs. 8095, 8096
Fort Lewis
Ft. Lewis WA 98433
Landholding Agency: Army
Property Number: 21199920174
Status: Unutilized
GSA Number:
Reasons: Extensive deterioration

Bldgs. U030A, U040A
Fort Lewis
Ft. Lewis WA 98433
Landholding Agency: Army
Property Number: 21199930080
Status: Unutilized
GSA Number:
Reasons: Extensive deterioration

Bldg. U106B
Fort Lewis
Ft. Lewis WA 98433
Landholding Agency: Army
Property Number: 21199930081
Status: Unutilized
GSA Number:
Reasons: Extensive deterioration

Bldg. A1202
Fort Lewis
Ft. Lewis WA 98433
Landholding Agency: Army
Property Number: 21199930094
Status: Unutilized
GSA Number:
Reasons: Extensive deterioration

Bldg. A1418
Fort Lewis
Ft. Lewis WA 98433
Landholding Agency: Army
Property Number: 21199930098
Status: Unutilized
GSA Number:
Reasons: Extensive deterioration

Bldg. 3145
Fort Lewis
Ft. Lewis WA 98433
Landholding Agency: Army
Property Number: 21199930099
Status: Unutilized
GSA Number:
Reasons: Extensive deterioration

Bldgs. 4063, 4064
Fort Lewis
Ft. Lewis WA 98433
Landholding Agency: Army
Property Number: 21199930100
Status: Unutilized
GSA Number:
Reasons: Extensive deterioration

Bldg. 9649
Fort Lewis
Ft. Lewis WA 98433
Landholding Agency: Army
Property Number: 21199930104
Status: Unutilized
GSA Number:
Reasons: Extensive deterioration

Bldg. 9631
Fort Lewis
Ft. Lewis WA 98433–9500
Landholding Agency: Army
Property Number: 21199940134
Status: Excess
GSA Number:
Reasons: Extensive deterioration

Bldg. 8288
Fort Lewis
Ft. Lewis WA 98433–9500
Landholding Agency: Army
Property Number: 21200120068
Status: Excess
GSA Number:
Reasons: Extensive deterioration

Bldgs. 1161, 1163
Fort Lewis
Ft. Lewis WA 98433–9500
Landholding Agency: Army
Property Number: 21200140072
Status: Excess
GSA Number:
Reasons: Extensive deterioration

Bldg. 1162
Fort Lewis
Ft. Lewis WA 98433–9500
Landholding Agency: Army
Property Number: 21200140073
Status: Excess
GSA Number:
Reasons: Extensive deterioration

Bldg. 4172
Fort Lewis
Ft. Lewis WA 98433–9500
Landholding Agency: Army
Property Number: 21200210075
Status: Excess
GSA Number:
Reasons: Extensive deterioration

Bldg. 4173
Fort Lewis
Ft. Lewis WA 98433–9500
Landholding Agency: Army
Property Number: 21200220097
Status: Excess
GSA Number:
Reasons: Extensive deterioration

Bldgs. 02401, 02402
Vancouver Barracks Cemetery
Vancouver WA 98661
Landholding Agency: Army
Property Number: 21200310048
Status: Unutilized
GSA Number:
Reasons: Extensive deterioration

Bldg. B1007
Fort Lewis
Ft. Lewis WA 98433
Landholding Agency: Army
Property Number: 21200330104
Status: Unutilized
GSA Number:
Reasons: Secured Area

Bldg. 8001
Fort Lewis
Ft. Lewis WA 98433
Landholding Agency: Army
Property Number: 21200330105
Status: Unutilized
GSA Number:

Reasons: Secured Area

Bldg. 11139
Fort Lewis
Ft. Lewis WA 98433
Landholding Agency: Army
Property Number: 21200330106
Status: Unutilized
GSA Number:
Reasons: Secured Area

Bldg. 09992
Fort Lewis
Ft. Lewis WA 98433
Landholding Agency: Army
Property Number: 21200430061
Status: Unutilized
Reasons: Secured Area

Bldgs. 002PF, U040D
Fort Lewis
Pierce WA 98433
Landholding Agency: Army
Property Number: 21200620053
Status: Unutilized
Reasons: Extensive deterioration

Bldgs. 006PF, 0025B
Fort Lewis
Pierce WA 98433
Landholding Agency: Army
Property Number: 21200620054
Status: Unutilized
Reasons: Extensive deterioration

Bldgs. U106B, U110A, U110B
Fort Lewis
Pierce WA 98433
Landholding Agency: Army
Property Number: 21200620055
Status: Unutilized
Reasons: Extensive deterioration

Bldgs. 3253, 3254, 3255
Fort Lewis
Pierce WA 98433
Landholding Agency: Army
Property Number: 21200620056
Status: Unutilized
Reasons: Extensive deterioration

Bldg. 3312
Fort Lewis
Pierce WA 98433
Landholding Agency: Army
Property Number: 21200620057
Status: Unutilized
Reasons: Extensive deterioration

Bldgs. W3429, W3430, W3431
Fort Lewis
Pierce WA 98433
Landholding Agency: Army
Property Number: 21200620058
Status: Unutilized
Reasons: Extensive deterioration

Bldg. 5165
Fort Lewis
Pierce WA 98433
Landholding Agency: Army
Property Number: 21200620059
Status: Unutilized
Reasons: Extensive deterioration

Bldg. 02080
Fort Lewis
Pierce WA 98433
Landholding Agency: Army
Property Number: 21200630067
Status: Unutilized
Reasons: Extensive deterioration

Bldgs. 03448, 03449
Fort Lewis
Pierce WA 98433
Landholding Agency: Army
Property Number: 21200630068
Status: Unutilized
Reasons: Extensive deterioration

Bldgs. 03452, 03458
Fort Lewis
Pierce WA 98433
Landholding Agency: Army
Property Number: 21200630069
Status: Unutilized
Reasons: Extensive deterioration

Bldg. 02080
Fort Lewis
Pierce WA 98433
Landholding Agency: Army
Property Number: 21200640087
Status: Unutilized
Reasons: Extensive deterioration

Bldgs. 03448, 03449
Fort Lewis
Pierce WA 98433
Landholding Agency: Army
Property Number: 21200640088
Status: Unutilized
Reasons: Extensive deterioration

Bldgs. 03452, 03458
Fort Lewis
Pierce WA 98433
Landholding Agency: Army
Property Number: 21200640089
Status: Unutilized
Reasons: Extensive deterioration

Bldgs. 03697, 03698
Fort Lewis
Pierce WA 98433
Landholding Agency: Army
Property Number: 21200640090
Status: Unutilized
Reasons: Extensive deterioration

Bldgs. 00803, 00805, 00806
Yakima Training Center
Fort Lewis
Yakima WA 98901
Landholding Agency: Army
Property Number: 21200740172
Status: Underutilized
Reasons: Secured Area

Bldgs. U002A, 3102
Fort Lewis
Yakima WA 98901
Landholding Agency: Army
Property Number: 21200820076
Status: Unutilized
Reasons: Secured Area; Extensive deterioration

Bldg. 03102
Fort Lewis
Pierce WA 98433
Landholding Agency: Army
Property Number: 21200840059
Status: Underutilized
Reasons: Secured Area

4 Bldgs.
Fort Lewis
Pierce WA 98433
Landholding Agency: Army
Property Number: 21200920078
Status: Unutilized
Directions: B0823, B0824, B1220, A1450
Reasons: Extensive deterioration

8 Bldgs.
Fort Lewis
Pierce WA 98433
Landholding Agency: Army
Property Number: 21201010040
Status: Unutilized
Directions: 003PF, 1325, 1443, 1447, 1448, 1449, 1450, 1455
Reasons: Extensive deterioration

4 Bldgs.
Fort Lewis
Pierce WA 98433
Landholding Agency: Army
Property Number: 21201010041
Status: Unutilized
Directions: 3123, 3124, 3140, 3141
Reasons: Extensive deterioration

5 Bldgs.
Fort Lewis
Pierce WA 98433
Landholding Agency: Army
Property Number: 21201010042
Status: Unutilized
Directions: 3642, 3646, 3647, 3648, 3652
Reasons: Extensive deterioration

6 Bldgs.
Joint Base Lewis/McChord
Ft. Lewis WA 98433
Landholding Agency: Army
Property Number: 21201020029
Status: Unutilized
Directions: 2202, 2204, 2205, 2206, 2260, 2265
Reasons: Secured Area

Bldgs. 3423, 3442, 3444
Fort Lewis
Pierce WA 98433
Landholding Agency: Army
Property Number: 21201020030
Status: Unutilized
Reasons: Secured Area; Extensive deterioration

Bldg. 395
Yakima Training Center
Yakima WA 98901
Landholding Agency: Army
Property Number: 21201030040
Status: Unutilized
Reasons: Extensive deterioration; Secured Area

15 Bldgs.
Fort Lewis
Pierce WA 98433
Landholding Agency: Army
Property Number: 21201030041
Status: Unutilized
Directions: 3417, 3418, 3423, 3424, 3427, 3428, 3429, 3430, 3433, 3434, 3435, 3436, 3439, 3442, 3444
Reasons: Extensive deterioration; Secured Area

6 Bldgs.
Joint Base Lewis-McChord
Pierce WA 98433
Landholding Agency: Army
Property Number: 21201030042
Status: Unutilized
Directions: 2202, 2204, 2205, 2206, 2260, 2265
Reasons: Secured Area

Bldgs. 2607, 2613
Fort Lewis
Pierce WA 98433
Landholding Agency: Army
Property Number: 21201040037
Status: Underutilized
Reasons: Secured Area

Bldgs. 00852 and 00853
Yakima Trng. Ctr.
Yakima WA 98901
Landholding Agency: Army
Property Number: 21201140001
Status: Unutilized
Reasons: Extensive deterioration

4 Bldgs.
Lincoln Blvd & Incinerator Rd
Joint Base Lewis-McChord
Lewis McChord WA 98433
Landholding Agency: Army
Property Number: 21201210088
Status: Underutilized
Directions: 00831, 00833, 01453, 01454
Comments: Nat'l security concerns; restricted access and no alternative method of access
Reasons: Secured Area

Bldg. 28
JBLM
JBLM WA
Landholding Agency: Army
Property Number: 21201220021
Status: Underutilized
Comments: Nat'l security concerns; public access denied & no alternative method to gain access w/out comprising nat'l security
Reasons: Secured Area

C0120
JBLM
JBLM WA 98433
Landholding Agency: Army
Property Number: 21201230020
Status: Unutilized
Comments: Secured military cantonment area; public access denied & no alternative method to gain access w/out comprising nat'l security
Reasons: Secured Area

8995
American Lake Ave.
JBLM WA 98433
Landholding Agency: Army
Property Number: 21201230021
Status: Unutilized
Comments: Secured military cantonment area; public access denied & no alternative method to gain access w/out comprising nat'l security
Reasons: Secured Area

8270
Shoreline Beach Rd.
JBLM WA 98433
Landholding Agency: Army
Property Number: 21201230022
Status: Unutilized
Comments: Secured military cantonment area; public access denied & no alternative method to access w/out comprising nat'l security
Reasons: Secured Area

3561 & 5181
4th Division Dr.
JBLM WA 98433
Landholding Agency: Army
Property Number: 21201230024
Status: Unutilized
Comments: Secured military cantonment area; public access denied & no alternative method w/out comprising nat'l security
Reasons: Secured Area

Wisconsin

Bldg.1993–1
Badger Army Ammunition Plant
Baraboo WI 53913
Landholding Agency: Army
Property Number: 21199011094
Status: Underutilized
Directions:
Comments: Friable asbestos
Reasons: Within 2000 ft. of flammable or explosive material; Secured Area Other environmental

Bldg. 227–1
Badger Army Ammunition Plant
Change House
Baraboo WI 53913
Landholding Agency: Army
Property Number: 21199011104
Status: Unutilized
Directions:
Comments: Friable asbestos
Reasons: Within 2000 ft. of flammable or explosive material; Other environmental; Secured Area

Bldg. 513–2
Badger Army Ammunition Plant
Change House
Baraboo WI 53913
Landholding Agency: Army
Property Number: 21199011106
Status: Unutilized
Directions:
Comments: Friable asbestos
Reasons: Other environmental; Within 2000 ft. of flammable or explosive material; Secured Area

Bldg. 513–4
Badger Army Ammunition Plant
Change House
Baraboo WI 53913
Landholding Agency: Army
Property Number: 21199011108
Status: Unutilized
Directions:
Comments: Friable asbestos
Reasons: Other environmental; Secured Area; Within 2000 ft. of flammable or explosive material

Bldg. 720–1
Badger Army Ammunition Plant
Change House
Baraboo WI 53913
Landholding Agency: Army
Property Number: 21199011109
Status: Unutilized
Directions:
Comments: Friable asbestos
Reasons: Other environmental; Secured Area; Within 2000 ft. of flammable or explosive material

Bldg. 720–2
Badger Army Ammunition Plant
Change House
Baraboo WI 53913
Landholding Agency: Army
Property Number: 21199011110
Status: Unutilized
Directions:
Comments: Friable asbestos
Reasons: Other environmental; Within 2000 ft. of flammable or explosive material; Secured Area

Bldg. 2016
Badger Army Ammunition Plant
Change House
Baraboo WI 53913
Landholding Agency: Army
Property Number: 21199011111
Status: Unutilized
Directions:
Comments: Friable asbestos
Reasons: Secured Area; Other environmental; Within 2000 ft. of flammable or explosive material

Bldg. 3016
Badger Army Ammunition Plant
Change House
Baraboo WI 53913
Landholding Agency: Army
Property Number: 21199011112
Status: Unutilized
Directions:
Comments: Friable asbestos
Reasons: Within 2000 ft. of flammable or explosive material; Secured Area Other environmental

Bldg. 5016
Badger Army Ammunition Plant
Change House
Baraboo WI 53913
Landholding Agency: Army
Property Number: 21199011113
Status: Unutilized
Directions:
Comments: Friable asbestos
Reasons: Within 2000 ft. of flammable or explosive material; Other environmental Secured Area

Bldg. 2031
Badger Army Ammunition Plant
Change House
Baraboo WI 53913
Landholding Agency: Army
Property Number: 21199011115
Status: Unutilized
Directions:
Comments: Friable asbestos
Reasons: Other environmental; Within 2000 ft. of flammable or explosive material; Secured Area

Bldg. 3031
Badger Army Ammunition Plant
Change House
Baraboo WI 53913
Landholding Agency: Army
Property Number: 21199011116
Status: Unutilized
Directions:
Comments: Friable asbestos
Reasons: Within 2000 ft. of flammable or explosive material; Secured Area Other environmental

Bldg. 4031
Badger Army Ammunition Plant
Change House
Baraboo WI 53913
Landholding Agency: Army
Property Number: 21199011117
Status: Unutilized
Directions:
Comments: Friable asbestos
Reasons: Secured Area; Other environmental Within 2000 ft. of flammable or explosive material

Bldg. 5031
Badger Army Ammunition Plant
Change House
Baraboo WI 53913
Landholding Agency: Army
Property Number: 21199011119
Status: Unutilized
Directions:
Comments: Friable asbestos

Reasons: Within 2000 ft. of flammable or explosive material; Other environmental Secured Area

Bldg. 2036
Badger Army Ammunition Plant
Change House
Baraboo WI 53913
Landholding Agency: Army
Property Number: 21199011120
Status: Unutilized
Directions:
Comments: Friable asbestos
Reasons: Other environmental; Within 2000 ft. of flammable or explosive material; Secured Area

Bldg. 3036
Badger Army Ammunition Plant
Change House
Baraboo WI 53913
Landholding Agency: Army
Property Number: 21199011122
Status: Unutilized
Directions:
Comments: Friabls asbestos
Reasons: Within 2000 ft. of flammable or explosive material; Secured Area Other environmental

Bldg. 4036
Badger Army Ammunition Plant
Change House
Baraboo WI 53913
Landholding Agency: Army
Property Number: 21199011123
Status: Unutilized
Directions:
Comments: Friable asbestos
Reasons: Other environmental; Within 2000 ft. of flammable or explosive material; Secured Area

Bldg. 5036
Badger Army Ammunition Plant
Change House
Baraboo WI 53913
Landholding Agency: Army
Property Number: 21199011124
Status: Unutilized
Directions:
Comments: Friable asbestos
Reasons: Within 2000 ft. of flammable or explosive material; Other environmental Secured Area

Bldg. 2504–1
Badger Army Ammunition Plant
Change House
Baraboo WI 53913
Landholding Agency: Army
Property Number: 21199011125
Status: Unutilized
Directions:
Comments: Friable asbestos
Reasons: Within 2000 ft. of flammable or explosive material; Other environmental Secured Area

Bldg. 2504–2
Badger Army Ammunition Plant
Change House
Baraboo WI 53913
Landholding Agency: Army
Property Number: 21199011126
Status: Unutilized
Directions:
Comments: Friable asbstos
Reasons: Within 2000 ft. of flammable or explosive material; Secured Area Other environmental

Bldg. 3504–1
Badger Army Ammunition Plant
Change House
Baraboo WI 53913
Landholding Agency: Army
Property Number: 21199011127
Status: Unutilized
Directions:
Comments: Friable asbestos
Reasons: Secured Area; Other environmental Within 2000 ft. of flammable or explosive material

Bldg. 3504–2
Badger Army Ammunition Plant
Change House
Baraboo WI 53913
Landholding Agency: Army
Property Number: 21199011128
Status: Unutilized
Directions:
Comments: Friable asbestos
Reasons: Other environmental; Within 2000 ft. of flammable or explosive material; Secured Area

Bldg. 4504–1
Badger Army Ammunition Plant
Change House
Baraboo WI 53913
Landholding Agency: Army
Property Number: 21199011129
Status: Unutilized
Directions:
Comments: Friable asbestos
Reasons: Other environmental; Secured Area; Within 2000 ft. of flammable or explosive material

Bldg. 4504–2
Badger Army Ammunition Plant
Change House
Baraboo WI 53913
Landholding Agency: Army
Property Number: 21199011130
Status: Unutilized
Directions:
Comments: Friable asbestos
Reasons: Within 2000 ft. of flammable or explosive material; Secured; Area Other environmental

Bldg. 5504–1
Badger Army Ammunition Plant
Change House
Baraboo WI 53913
Landholding Agency: Army
Property Number: 21199011131
Status: Unutilized
Directions:
Comments: Friable asbestos
Reasons: Secured Area; Other environmental Within 2000 ft. of flammable or explosive material

Bldg. 5504–2
Badger Army Ammunition Plant
Change House
Baraboo WI 53913
Landholding Agency: Army
Property Number: 21199011132
Status: Unutilized
Directions:
Comments: Friable asbestos
Reasons: Secured Area; Other environmental Within 2000 ft. of flammable or explosive material

Bldg. 2557
Badger Army Ammunition Plant
Change House
Baraboo WI 53913
Landholding Agency: Army
Property Number: 21199011133
Status: Unutilized
Directions:
Comments: Friable asbestos
Reasons: Secured Area; Within 2000 ft. of flammable or explosive material; Other environmental

Bldg. 2563
Badger Army Ammunition Plant
Change House
Baraboo WI 53913
Landholding Agency: Army
Property Number: 21199011134
Status: Unutilized
Directions:
Comments: Friable asbestos
Reasons: Other environmental; Within 2000 ft. of flammable or explosive material; Secured Area

Bldg. 3563–1
Badger Army Ammunition Plant
Change House
Baraboo WI 53913
Landholding Agency: Army
Property Number: 21199011135
Status: Unutilized
Directions:
Comments: Friable asbestos
Reasons: Within 2000 ft. of flammable or explosive material; Other environmental Secured Area

Bldg. 3563–3
Badger Army Ammunition Plant
Change House
Baraboo WI 53913
Landholding Agency: Army
Property Number: 21199011136
Status: Unutilized
Directions:
Comments: Friable asbestos
Reasons: Secured Area; Within 2000 ft. of flammable or explosive material; Other environmental

Bldg. 4563–2
Badger Army Ammunition Plant
Change House
Baraboo WI 53913
Landholding Agency: Army
Property Number: 21199011137
Status: Unutilized
Directions:
Comments: Friable asbestos
Reasons: Other environmental; Secured Area; Within 2000 ft. of flammable or explosive material

Bldg. 4563–3
Badger Army Ammunition Plant
Change House
Baraboo WI 53913
Landholding Agency: Army
Property Number: 21199011138
Status: Unutilized
Directions:
Comments: Friable asbestos
Reasons: Other environmental; Secured Area; Within 2000 ft. of flammable or explosive material

Bldg. 4563–4
Badger Army Ammunition Plant
Change House
Baraboo WI 53913
Landholding Agency: Army
Property Number: 21199011139

Status: Unutilized
Directions:
Comments: Friable asbestos
Reasons: Secured Area; Other environmental Within 2000 ft. of flammable or explosive material

Bldg. 5557–1
Badger Army Ammunition Plant
Change House
Baraboo WI 53913
Landholding Agency: Army
Property Number: 21199011141
Status: Unutilized
Directions:
Comments: Friable asbestos
Reasons: Within 2000 ft. of flammable or explosive material; Other environmental Secured Area

Bldg. 5557–2
Badger Army Ammunition Plant
Change House
Baraboo WI 53913
Landholding Agency: Army
Property Number: 21199011142
Status: Unutilized
Directions:
Comments: Friable asbestos
Reasons: Secured Area; Within 2000 ft. of flammable or explosive material; Other environmental

Bldg. 5557–5
Badger Army Ammunition Plant
Change House
Baraboo WI 53913
Landholding Agency: Army
Property Number: 21199011144
Status: Unutilized
Directions:
Comments: Friable asbestos
Reasons: Other environmental; Secured Area; Within 2000 ft. of flammable or explosive material

Bldg. 273
Badger Army Ammunition Plant
Training Facility
Baraboo WI 53913
Landholding Agency: Army
Property Number: 21199011148
Status: Unutilized
Directions:
Comments: Friable asbestos
Reasons: Secured Area; Within 2000 ft. of flammable or explosive material; Other environmental

Bldg. 229
Badger Army Ammunition Plant
Administration Building
Baraboo WI 53913
Landholding Agency: Army
Property Number: 21199011149
Status: Unutilized
Directions:
Comments: Friable asbestos
Reasons: Within 2000 ft. of flammable or explosive material; Other environmental Secured Area

Bldg. 2030
Badger Army Ammunition Plant
Administration-General Purpose
Baraboo WI 53913
Landholding Agency: Army
Property Number: 21199011150
Status: Unutilized
Directions:
Comments: Friable asbestos
Reasons: Within 2000 ft. of flammable or explosive material; Other environmental Secured Area

Bldg. 268
Badger Army Ammunition Plant
Administration Bldg.
Baraboo WI 53913
Landholding Agency: Army
Property Number: 21199011151
Status: Unutilized
Directions:
Comments: Friable asbestos
Reasons: Secured Area; Other environmental Within 2000 ft. of flammable or explosive material

Bldg. 267
Badger Army Ammunition Plant
Administration Bldg.
Baraboo WI 53913
Landholding Agency: Army
Property Number: 21199011152
Status: Unutilized
Directions:
Comments: Friable asbestos
Reasons: Within 2000 ft. of flammable or explosive material; Secured Area Other environmental

Bldg. 1900–1
Badger Army Ammunition Plant
Standard Magazine
Baraboo WI 53913
Landholding Agency: Army
Property Number: 21199011153
Status: Unutilized
Directions:
Comments: Friable asbestos
Reasons: Within 2000 ft. of flammable or explosive material; Other environmental; Secured Area

Bldg. 1900–2
Badger Army Ammunition Plant
Standard Magazine
Baraboo WI 53913
Landholding Agency: Army
Property Number: 21199011154
Status: Unutilized
Directions:
Comments: Friable asbestos
Reasons: Within 2000 ft. of flammable or explosive material; Other environmental Secured Area

Bldg. 1900–3
Badger Army Ammunition Plant
Standard Magazine
Baraboo WI 53913
Landholding Agency: Army
Property Number: 21199011155
Status: Unutilized
Directions:
Comments: Friable asbestos
Reasons: Other environmental Within 2000 ft. of flammable or explosive material; Secured Area

Bldg. 1900–4
Badger Army Ammunition Plant
Standard Magazine
Baraboo WI 53913
Landholding Agency: Army
Property Number: 21199011156
Status: Unutilized
Directions:
Comments: Friable asbestos
Reasons: Other environmental Secured Area; Within 2000 ft. of flammable or explosive material

Bldg. 3030
Badger Army Ammunition Plant
Administration-General Purpose
Baraboo WI 53913
Landholding Agency: Army
Property Number: 21199011157
Status: Unutilized
Directions:
Comments: Friable asbestos
Reasons: Secured Area; Within 2000 ft. of flammable or explosive material; Other environmental

Bldg. 1900–5
Badger Army Ammunition Plant
Standard Magazine
Baraboo WI 53913
Landholding Agency: Army
Property Number: 21199011158
Status: Unutilized
Directions:
Comments: Friable asbestos
Reasons: Within 2000 ft. of flammable or explosive material; Secured Area Other environmental

Bldg. 1900–6
Badger Army Ammunition Plant
Standard Magazine
Baraboo WI 53913
Landholding Agency: Army
Property Number: 21199011159
Status: Unutilized
Directions:
Comments: Friable asbestos
Reasons: Within 2000 ft. of flammable or explosive material; Secured Area Other environmental

Bldg. 1900–7
Badger Army Ammunition Plant
Standard Magazine
Baraboo WI 53913
Landholding Agency: Army
Property Number: 21199011160
Status: Unutilized
Directions:
Comments: Friable asbestos
Reasons: Within 2000 ft. of flammable or explosive material; Secured Area Other environmental

Bldg. 4030
Badger Army Ammunition Plant
Administration-General Purpose
Baraboo WI 53913
Landholding Agency: Army
Property Number: 21199011161
Status: Unutilized
Directions:
Comments: Friable asbestos
Reasons: Within 2000 ft. of flammable or explosive material; Other environmental Secured Area

Bldg. 1906–1
Badger Army Ammunition Plant
Standard Magzine
Baraboo WI 53913
Landholding Agency: Army
Property Number: 21199011162
Status: Unutilized
Directions:
Comments: Friable asbestos
Reasons: Within 2000 ft. of flammable or explosive material; Other environmental Secured Area

Bldg. 1906–10
Badger Army Ammunition Plant
Standard Magazine

Baraboo WI 53913
Landholding Agency: Army
Property Number: 21199011163
Status: Unutilized
Directions:
Comments: Friable asbestos
Reasons: Within 2000 ft. of flammable or explosive material; Secured Area; Other environmental

Bldg. 1906–21
Badger Army Ammunition Plant
Standard Magazine
Baraboo WI 53913
Landholding Agency: Army
Property Number: 21199011164
Status: Unutilized
Directions:
Comments: Friable asbestos
Reasons: Other environmental; Secured Area; Within 2000 ft. of flammable or explosive material

Bldg. 5030
Badger Army Ammunition Plant
Administration-General Purpose
Baraboo WI 53913
Landholding Agency: Army
Property Number: 21199011165
Status: Unutilized
Directions:
Comments: Friable asbestos
Reasons: Secured Area; Other environmental Within 2000 ft. of flammable or explosive material

Bldg. 1906–31
Badger Army Ammunition Plant
Standard Magazine
Baraboo WI 53913
Landholding Agency: Army
Property Number: 21199011166
Status: Unutilized
Directions:
Comments: Friable asbestos
Reasons: Secured Area; Within 2000 ft. of flammable or explosive material; Other environmental

Bldg. 1993–2
Badger Army Ammunition Plant
Administration-General Purpose
Baraboo WI 53913
Landholding Agency: Army
Property Number: 21199011167
Status: Unutilized
Directions:
Comments: Friable asbestos
Reasons: Secured Area; Other environmental Within 2000 ft. of flammable or explosive material

Bldg. 1906–42
Badger Army Ammunition Plant
Standard Magazine
Baraboo WI 53913
Landholding Agency: Army
Property Number: 21199011168
Status: Unutilized
Directions:
Comments: Friable asbestos
Reasons: Within 2000 ft. of flammable or explosive material; Other environmental Secured Area

Bldg. 1906–46
Badger Army Ammunition Plant
Standard Magazine
Baraboo WI 53913
Landholding Agency: Army
Property Number: 21199011169
Status: Unutilized
Directions:
Comments: Friable asbestos
Reasons: Within 2000 ft. of flammable or explosive material; Other environmental Secured Area

Bldg. 1906–50
Badger Army Ammunition Plant
Standard Magazine
Baraboo WI 53913
Landholding Agency: Army
Property Number: 21199011170
Status: Unutilized
Directions:
Comments: Friable asbestos
Reasons: Other environmental; Secured Area; Within 2000 ft. of flammable or explosive material

Bldg. 1906–4
Badger Army Ammunition Plant
Standard Magazine
Baraboo WI 53913
Landholding Agency: Army
Property Number: 21199011171
Status: Unutilized
Directions:
Comments: Friable asbestos
Reasons: Secured Area; Other environmental Within 2000 ft. of flammable or explosive material

Bldg. 1906–12
Badger Army Ammunition Plant
Standard Magazine
Baraboo WI 53913
Landholding Agency: Army
Property Number: 21199011172
Status: Unutilized
Directions:
Comments: Friable asbestos
Reasons: Secured Area; Within 2000 ft. of flammable or explosive material; Other environmental

Bldg. 1906–13
Badger Army Ammunition Plant
Standard Magazine
Baraboo WI 53913
Landholding Agency: Army
Property Number: 21199011173
Status: Unutilized
Directions:
Comments: Friable asbestos
Reasons: Other environmental; Within 2000 ft. of flammable or explosive material; Secured Area

Bldg. 1906–23
Badger Army Ammunition Plant
Standard Magazine
Baraboo WI 53913
Landholding Agency: Army
Property Number: 21199011174
Status: Unutilized
Directions:
Comments: Friable asbbestos
Reasons: Secured Area; Other environmental Within 2000 ft. of flammable or explosive material

Bldg. 1906–28
Badger Army Ammunition Plant
Standard Magazine
Baraboo WI 53913
Landholding Agency: Army
Property Number: 21199011175
Status: Unutilized
Directions:
Comments: Friable asbestos
Reasons: Other environmental; Secured Area; Within 2000 ft. of flammable or explosive material

Bldg. 1932–25
Badger Army Ammunition Plant
Cannon Magazine
Baraboo WI 53913
Landholding Agency: Army
Property Number: 21199011176
Status: Unutilized
Directions:
Comments: Friable asbestos
Reasons: Within 2000 ft. of flammable or explosive material; Other environmental Secured Area

Bldg. 1906–34
Badger Army Ammunition Plant
Standard Magazine
Baraboo WI 53913
Landholding Agency: Army
Property Number: 21199011177
Status: Unutilized
Directions:
Comments: Friable asbestos
Reasons: Secured Area; Within 2000 ft. of flammable or explosive material; Other environmental

Bldg. 1906–33
Badger Army Ammunition Plant
Standard Magazine
Baraboo WI 53913
Landholding Agency: Army
Property Number: 21199011178
Status: Unutilized
Directions:
Comments: Friable asbestos
Reasons: Secured Area; Other environmental Within 2000 ft. of flammable or explosive material

Bldg. 1906–39
Badger Army Ammunition Plant
Standard Magazine
Baraboo WI 53913
Landholding Agency: Army
Property Number: 21199011179
Status: Unutilized
Directions:
Comments: Friable asbestos
Reasons: Secured Area; Other environmental Within 2000 ft. of flammable or explosive material

Bldg. 1932–2
Badger Army Ammunition Plant
Cannon Magazine
Baraboo WI 53913
Landholding Agency: Army
Property Number: 21199011180
Status: Unutilized
Directions:
Comments: Friable asbestos
Reasons: Secured Area; Other environmental Within 2000 ft. of flammable or explosive material

Bldg. 1932–7
Badger Army Ammunition Plant
Cannon Magazine
Baraboo WI 53913
Landholding Agency: Army
Property Number: 21199011181
Status: Unutilized
Directions:
Comments: Friable asbestos
Reasons: Within 2000 ft. of flammable or explosive material; Other environmental Secured Area

Bldg. 1906–43
Badger Army Ammunition Plant
Standard Magazine
Baraboo WI 53913
Landholding Agency: Army
Property Number: 21199011182
Status: Unutilized
Directions:
Comments: Friable asbestos
Reasons: Other environmental; Secured Area; Within 2000 ft. of flammable or explosive material

Bldg. 1932–21
Badger Army Ammunition Plant
Cannon Magazine
Baraboo WI 53913
Landholding Agency: Army
Property Number: 21199011183
Status: Unutilized
Directions:
Comments: Friable asbestos
Reasons: Other environmental Within 2000 ft. of flammable or explosive material; Secured Area

Bldg. 1906–40
Badger Army Ammunition Plant
Standard Magazine
Baraboo WI 53913
Landholding Agency: Army
Property Number: 21199011184
Status: Unutilized
Directions:
Comments: Friable asbestos
Reasons: Other environmental; Secured Area; Within 2000 ft. of flammable or explosive material

Bldg. 1906–48
Badger Army Ammunition Plant
Standard Magazine
Baraboo WI 53913
Landholding Agency: Army
Property Number: 21199011185
Status: Unutilized
Directions:
Comments: Friable asbestos
Reasons: Other environmental; Within 2000 ft. of flammable or explosive material; Secured Area

Bldg. 1906–51
Badger Army Ammunition Plant
Standard Magazine
Baraboo WI 53913
Landholding Agency: Army
Property Number: 21199011186
Status: Unutilized
Directions:
Comments: Friable asbestos
Reasons: Other environmental; Within 2000 ft. of flammable or explosive material; Secured Area

Bldg. 1932–33
Badger Army Ammunition Plant
Cannon Magazine
Baraboo WI 53913
Landholding Agency: Army
Property Number: 21199011187
Status: Unutilized
Directions:
Comments: Friable asbestos
Reasons: Secured Area; Within 2000 ft. of flammable or explosive material; Other environmental

Bldg. 1906–53
Badger Army Ammunition Plant
Standard Magazine
Baraboo WI 53913
Landholding Agency: Army
Property Number: 21199011188
Status: Unutilized
Directions:
Comments: Friable asbestos
Reasons: Within 2000 ft. of flammable or explosive material; Secured Area; Other environmental

Bldg. 1906–8
Badger Army Ammunition Plant
Standard Magazine
Baraboo WI 53913
Landholding Agency: Army
Property Number: 21199011189
Status: Unutilized
Directions:
Comments: Friable asbestos
Reasons: Within 2000 ft. of flammable or explosive material; Secured Area; Other environmental

Bldg. 1932–8
Badger Army Ammunition Plant
Cannon Magazine
Baraboo WI 53913
Landholding Agency: Army
Property Number: 21199011190
Status: Unutilized
Directions:
Comments: Friable asbestos
Reasons: Other environmental; Within 2000 ft. of flammable or explosive material; Secured Area

Bldg. 1906–9
Badger Army Ammunition Plant
Standard Magazine
Baraboo WI 53913
Landholding Agency: Army
Property Number: 21199011191
Status: Unutilized
Directions:
Comments: Friable asbestos
Reasons: Other environmental; Secured Area; Within 2000 ft. of flammable or explosive material

Bldg. 1932–17
Badger Army Ammunition Plant
Cannon Magazine
Baraboo WI 53913
Landholding Agency: Army
Property Number: 21199011192
Status: Unutilized
Directions:
Comments: Friable asbestos
Reasons: Other environmental; Within 2000 ft. of flammable or explosive material; Secured Area

Bldg. 1906–14
Badger Army Ammunition Plant
Standard Magazine
Baraboo WI 53913
Landholding Agency: Army
Property Number: 21199011193
Status: Unutilized
Directions:
Comments: Friable asbestos
Reasons: Other environmental; Secured Area; Within 2000 ft. of flammable or explosive material

Bldg. 1906–15
Badger Army Ammunition Plant
Standard Magazine
Baraboo WI 53913
Landholding Agency: Army
Property Number: 21199011194
Status: Unutilized
Directions:
Comments: Friable asbestos
Reasons: Within 2000 ft. of flammable or explosive material; Other environmental; Secured Area

Bldg. 1906–20
Badger Army Ammunition Plant
Standard Magazine
Baraboo WI 53913
Landholding Agency: Army
Property Number: 21199011195
Status: Unutilized
Directions:
Comments: Friable asbestos
Reasons: Other environmental; Within 2000 ft. of flammable or explosive material; Secured Area

Bldg. 1906–19
Badger Army Ammunition Plant
Standard Magazine
Baraboo WI 53913
Landholding Agency: Army
Property Number: 21199011196
Status: Unutilized
Directions:
Comments: Friable asbestos
Reasons: Secured Area; Other environmental; Within 2000 ft. of flammable or explosive material

Bldg. 1906–25
Badger Army Ammunition Plant
Standard Magazine
Baraboo WI 53913
Landholding Agency: Army
Property Number: 21199011197
Status: Unutilized
Directions:
Comments: Friable asbestos
Reasons: Other environmental; Within 2000 ft. of flammable or explosive material; Secured Area

Bldg. 1906–24
Badger Army Ammunition Plant
Standard Magazine
Baraboo WI 53913
Landholding Agency: Army
Property Number: 21199011198
Status: Unutilized
Directions:
Comments: Friable asbestos
Reasons: Secured Area; Other environmental; Within 2000 ft. of flammable or explosive material

Bldg. 1932–5
Badger Army Ammunition Plant
Cannon Magazine
Baraboo WI 53913
Landholding Agency: Army
Property Number: 21199011199
Status: Unutilized
Directions:
Comments: Friable asbestos
Reasons: Secured Area; Within 2000 ft. of flammable or explosive material; Other environmental

Bldg. 1906–29
Badger Army Ammunition Plant
Standard Magazine
Baraboo WI 53913
Landholding Agency: Army
Property Number: 21199011200
Status: Unutilized
Directions:
Comments: Friable asbestos

Reasons: Within 2000 ft. of flammable or explosive material; Other environmental; Secured Area

Bldg. 1906–36
Badger Army Ammunition Plant
Standard Magazine
Baraboo WI 53913
Landholding Agency: Army
Property Number: 21199011201
Status: Unutilized
Directions:
Comments: Friable asbestos
Reasons: Secured Area; Other environmental; Within 2000 ft. of flammable or explosive material

Bldg. 1932–23
Badger Army Ammunition Plant
Cannon Magazine
Baraboo WI 53913
Landholding Agency: Army
Property Number: 21199011202
Status: Unutilized
Directions:
Comments: Friable asbestos
Reasons: Other environmental; Within 2000 ft. of flammable or explosive material; Secured Area

Bldg. 1906–45
Badger Army Ammunition Plant
Standard Magazine
Baraboo WI 53913
Landholding Agency: Army
Property Number: 21199011203
Status: Unutilized
Directions:
Comments: Friable asbestos
Reasons: Other environmental; Secured Area; Within 2000 ft. of flammable or explosive material

Bldg. 1906–49
Badger Army Ammunition Plant
Standard Magazine
Baraboo WI 53913
Landholding Agency: Army
Property Number: 21199011204
Status: Unutilized
Directions:
Comments: Friable asbestos
Reasons: Other environmental; Within 2000 ft. of flammable or explosive material; Secured Area

Bldg. 1932–9
Badger Army Ammunition Plant
Cannon Magazine
Baraboo WI 53913
Landholding Agency: Army
Property Number: 21199011205
Status: Unutilized
Directions:
Comments: Friable asbestos
Reasons: Other environmental; Within 2000 ft. of flammable or explosive material; Secured Area

Bldg. 1906–56
Badger Army Ammunition Plant
Standard Magazine
Baraboo WI 53913
Landholding Agency: Army
Property Number: 21199011206
Status: Unutilized
Directions:
Comments: Friable asbestos
Reasons: Other environmental; Within 2000 ft. of flammable or explosive material; Secured Area

Bldg. 9100–1
Badger Army Ammunition Plant
Richmond Magazine
Baraboo WI 53913
Landholding Agency: Army
Property Number: 21199011207
Status: Unutilized
Directions:
Comments: Friable asbestos
Reasons: Other environmental; Within 2000 ft. of flammable or explosive material; Secured Area

Bldg. 1906–54
Badger Army Ammunition Plant
Standard Magazine
Baraboo WI 53913
Landholding Agency: Army
Property Number: 21199011208
Status: Unutilized
Directions:
Comments: Friable asbestos
Reasons: Within 2000 ft. of flammable or explosive material; Other environmental; Secured Area

Bldg. 3000
Badger Army Ammunition Plant
Warehouse
Baraboo WI 53913
Landholding Agency: Army
Property Number: 21199011209
Status: Underutilized
Directions:
Comments: Friable asbestos
Reasons: Secured Area; Within 2000 ft. of flammable or explosive material; Other environmental

Bldg. 5000
Badger Army Ammunition Plant
Warehouse
Baraboo WI 53913
Landholding Agency: Army
Property Number: 21199011210
Status: Underutilized
Directions:
Comments: Friable asbestos
Reasons: Within 2000 ft. of flammable or explosive material; Other environmental; Secured Area

Bldg. 275
Badger Army Ammunition Plant
Warehouse
Baraboo WI 53913
Landholding Agency: Army
Property Number: 21199011211
Status: Underutilized
Directions:
Comments: Friable asbestos
Reasons: Secured Area; Within 2000 ft. of flammable or explosive material; Other environmental

Bldg. 200
Badger Army Ammunition Plant
Post HQ
Baraboo WI 53913
Landholding Agency: Army
Property Number: 21199011212
Status: Underutilized
Directions:
Comments: Friable asbestos
Reasons: Other environmental; Within 2000 ft. of flammable or explosive material; Secured Area

Bldg. 9100–2
Badger Army Ammunition Plant
Richmond Magazine
Baraboo WI 53913
Landholding Agency: Army
Property Number: 21199011213
Status: Unutilized
Directions:
Comments: Friable asbestos
Reasons: Secured Area; Within 2000 ft. of flammable or explosive material; Other environmental

Bldg. 214
Badger Army Ammunition Plant
Administration
Baraboo WI 53913
Landholding Agency: Army
Property Number: 21199011214
Status: Unutilized
Directions:
Comments: Friable asbestos
Reasons: Secured Area; Other environmental; Within 2000 ft. of flammable or explosive material

Bldg. 1975–2
Badger Army Ammunition Plant
Baraboo WI 53913
Landholding Agency: Army
Property Number: 21199011215
Status: Unutilized
Directions:
Comments: Friable asbestos
Reasons: Other environmental; Within 2000 ft. of flammable or explosive material; Secured Area

Bldg. 9100–3
Badger Army Ammunition Plant
Richmond Magazine
Baraboo WI 53913
Landholding Agency: Army
Property Number: 21199011216
Status: Unutilized
Directions:
Comments: Friable asbestos
Reasons: Within 2000 ft. of flammable or explosive material; Other environmental; Secured Area

Bldg. 718
Badger Army Ammunition Plant
Adminstration
Baraboo WI 53913
Landholding Agency: Army
Property Number: 21199011217
Status: Underutilized
Directions:
Comments: Friable asbestos
Reasons: Within 2000 ft. of flammable or explosive material; Other environmental; Secured Area

Bldg. 9100–4
Badger Army Ammunition Plant
Richmond Magazine
Baraboo WI 53913
Landholding Agency: Army
Property Number: 21199011218
Status: Unutilized
Directions:
Comments: Friable asbestos
Reasons: Within 2000 ft. of flammable or explosive material; Other environmental; Secured Area

Bldg. 9100–5
Badger Army Ammunition Plant
Richmond Magazine
Baraboo WI 53913
Landholding Agency: Army
Property Number: 21199011219
Status: Unutilized

Directions:
Comments: Friable asbestos
Reasons: Within 2000 ft. of flammable or explosive material; Other environmental; Secured Area

Bldg. 9100–6
Badger Army Ammunition Plant
Richmond Magazine
Baraboo WI 53913
Landholding Agency: Army
Property Number: 21199011220
Status: Unutilized
Directions:
Comments: Friable asbestos
Reasons: Other environmental; Secured Area; Within 2000 ft. of flammable or explosive material

Bldg. 9100–8
Badger Army Ammunition Plant
Richmond Magazine
Baraboo WI 53913
Landholding Agency: Army
Property Number: 21199011221
Status: Unutilized
Directions:
Comments: Friable asbestos
Reasons: Within 2000 ft. of flammable or explosive material; Other environmental; Secured Area

Bldg. 9100–10
Badger Army Ammunition Plant
Richmond Magazine
Baraboo WI 53913
Landholding Agency: Army
Property Number: 21199011222
Status: Unutilized
Directions:
Comments: Friable asbestos
Reasons: Secured Area; Within 2000 ft. of flammable or explosive material; Other environmental

Bldg. 9100–11
Badger Army Ammunition Plant
Richmond Magazine
Baraboo WI 53913
Landholding Agency: Army
Property Number: 21199011223
Status: Unutilized
Directions:
Comments: Friable asbestos
Reasons: Secured Area; Other environmental; Within 2000 ft. of flammable or explosive material

Bldg. 9100–12
Badger Army Ammunition Plant
Richmond Magazine
Baraboo WI 53913
Landholding Agency: Army
Property Number: 21199011224
Status: Unutilized
Directions:
Comments: Friable asbestos
Reasons: Within 2000 ft. of flammable or explosive material; Other environmental; Secured Area

Bldg. 9100–19
Badger Army Ammunition Plant
Richmond Magazine
Baraboo WI 53913
Landholding Agency: Army
Property Number: 21199011225
Status: Unutilized
Directions:
Comments: Friable asbestos
Reasons: Other environmental; Within 2000 ft. of flammable or explosive material; Secured Area

Bldg. 9102–1
Badger Army Ammunition Plant
Igloo Magazine
Baraboo WI 53913
Landholding Agency: Army
Property Number: 21199011226
Status: Unutilized
Directions:
Comments: Friable asbestos
Reasons: Secured Area; Within 2000 ft. of flammable or explosive material; Other environmental

Bldg. 9102–2
Badger Army Ammunition Plant
Igloo Magazine
Baraboo WI 53913
Landholding Agency: Army
Property Number: 21199011227
Status: Unutilized
Directions:
Comments: Friable asbestos
Reasons: Within 2000 ft. of flammable or explosive material; Other environmental; Secured Area

Bldg. 9102–3
Badger Army Ammunition Plant
Igloo Magazine
Baraboo WI 53913
Landholding Agency: Army
Property Number: 21199011228
Status: Unutilized
Directions:
Comments: Friable asbestos
Reasons: Within 2000 ft. of flammable or explosive material; Other environmental; Secured Area

Bldg. 1975–1
Badger Army Ammunition Plant
Administration
Baraboo WI 53913
Landholding Agency: Army
Property Number: 21199011229
Status: Unutilized
Directions:
Comments: Friable asbestos
Reasons: Within 2000 ft. of flammable or explosive material; Other environmental; Secured Area

Bldg. 1975–4
Badger Army Ammunition Plant
Administration
Baraboo WI 53913
Landholding Agency: Army
Property Number: 21199011230
Status: Unutilized
Directions:
Comments: Friable asbestos
Reasons: Within 2000 ft. of flammable or explosive material; Other environmental; Secured Area

Bldg. 1975–5
Badger Army Ammunition Plant
Administration
Baraboo WI 53913
Landholding Agency: Army
Property Number: 21199011231
Status: Unutilized
Directions:
Comments: Friable asbestos
Reasons: Within 2000 ft. of flammable or explosive material; Other environmental; Secured Area

Bldg. 1975–7
Badger Army Ammunition Plant
Administration
Baraboo WI 53913
Landholding Agency: Army
Property Number: 21199011233
Status: Unutilized
Directions:
Comments: Friable asbestos
Reasons: Secured Area; Within 2000 ft. of flammable or explosive material; Other environmental

Bldg. 1975–8
Badger Army Ammunition Plant
Administration
Baraboo WI 53913
Landholding Agency: Army
Property Number: 21199011234
Status: Unutilized
Directions:
Comments: Friable asbestos
Reasons: Other environmental; Secured Area; Within 2000 ft. of flammable or explosive material

Bldg. 205
Badger Army Ammunition Plant
Clinic
Baraboo WI 53913
Landholding Agency: Army
Property Number: 21199011236
Status: Unutilized
Directions:
Comments: Friable asbestos
Reasons: Other environmental; Secured Area; Within 2000 ft. of flammable or explosive material

Bldg. 2554
Badger Army Ammunition Plant
Administration
Baraboo WI 53913
Landholding Agency: Army
Property Number: 21199011238
Status: Unutilized
Directions:
Comments: Friable asbestos
Reasons: Secured Area; Other environmental; Within 2000 ft. of flammable or explosive material

Bldg. 5554
Badger Army Ammunition Plant
Administration
Baraboo WI 53913
Landholding Agency: Army
Property Number: 21199011240
Status: Unutilized
Directions:
Comments: Friable asbestos
Reasons: Within 2000 ft. of flammable or explosive material; Secured Area; Other environmental

Bldg. 3554
Badger Army Ammunition Plant
Administration
Baraboo WI 53913
Landholding Agency: Army
Property Number: 21199011242
Status: Unutilized
Directions:
Comments: Friable asbestos
Reasons: Secured Area; Within 2000 ft. of flammable or explosive material; Other environmental

Bldg. 4554
Badger Army Ammunition Plant
Administration

Baraboo WI 53913
Landholding Agency: Army
Property Number: 21199011244
Status: Unutilized
Directions:
Comments: Friable asbestos
Reasons: Secured Area; Other environmental; Within 2000 ft. of flammable or explosive material

Bldg. 4568
Badger Army Ammunition Plant
Administration
Baraboo WI 53913
Landholding Agency: Army
Property Number: 21199011247
Status: Unutilized
Directions:
Comments: Friable asbestos
Reasons: Other environmental; Secured Area; Within 2000 ft. of flammable or explosive material

Bldg. 8010
Badger Army Ammunition Plant
Administration
Baraboo WI 53913
Landholding Agency: Army
Property Number: 21199011249
Status: Unutilized
Directions:
Comments: Friable asbestos
Reasons: Within 2000 ft. of flammable or explosive material; Other environmental; Secured Area

Bldg. 6530–1
Badger Army Ammunition Plant
Administration
Baraboo WI 53913
Landholding Agency: Army
Property Number: 21199011251
Status: Unutilized
Directions:
Comments: Friable asbestos
Reasons: Within 2000 ft. of flammable or explosive material; Other environmental; Secured Area

Bldg. 6535
Badger Army Ammunition Plant
Bus Station
Baraboo WI 53913
Landholding Agency: Army
Property Number: 21199011256
Status: Unutilized
Directions:
Comments: Friable asbestos
Reasons: Within 2000 ft. of flammable or explosive material; Other environmental; Secured Area

Bldg. 2015
Badger Army Ammunition Plant
Administration
Baraboo WI 53913
Landholding Agency: Army
Property Number: 21199011259
Status: Unutilized
Directions:
Comments: Friable asbestos
Reasons: Within 2000 ft. of flammable or explosive material; Other environmental; Secured Area

Bldg. 3015
Badger Army Ammunition Plant
Administration
Baraboo WI 53913
Landholding Agency: Army
Property Number: 21199011263
Status: Unutilized
Directions:
Comments: Friable asbestos
Reasons: Within 2000 ft. of flammable or explosive material; Other environmental; Secured Area

Bldg. 4015
Badger Army Ammunition Plant
Administration
Baraboo WI 53913
Landholding Agency: Army
Property Number: 21199011265
Status: Unutilized
Directions:
Comments: Friable asbestos
Reasons: Within 2000 ft. of flammable or explosive material; Other environmental; Secured Area

Bldg. 5015
Badger Army Ammunition Plant
Administration
Baraboo WI 53913
Landholding Agency: Army
Property Number: 21199011268
Status: Unutilized
Directions:
Comments: Friable asbestos
Reasons: Within 2000 ft. of flammable or explosive material; Other environmental; Secured Area

Bldg. 6532–1
Badger Army Ammunition Plant
Change House
Baraboo WI 53913
Landholding Agency: Army
Property Number: 21199011270
Status: Unutilized
Directions:
Comments: Friable asbestos
Reasons: Secured Area; Within 2000 ft. of flammable or explosive material; Other environmental

Bldg. 6532–2
Badger Army Ammunition Plant
Change House
Baraboo WI 53913
Landholding Agency: Army
Property Number: 21199011275
Status: Unutilized
Directions:
Comments: Friable asbestos
Reasons: Other environmental; Within 2000 ft. of flammable or explosive material; Secured Area

Bldg. 6532–3
Badger Army Ammunition Plant
Change House
Baraboo WI 53913
Landholding Agency: Army
Property Number: 21199011277
Status: Unutilized
Directions:
Comments: Friable asbestos
Reasons: Secured Area; Within 2000 ft. of flammable or explosive material; Other environmental

Bldg. 6532–4
Badger Army Ammunition Plant
Change House
Baraboo WI 53913
Landholding Agency: Army
Property Number: 21199011280
Status: Unutilized
Directions:
Comments: Friable asbestos
Reasons: Secured Area; Within 2000 ft. of flammable or explosive material; Other environmental

Bldg. 6532–5
Badger Army Ammunition Plant
Change House
Baraboo WI 53913
Landholding Agency: Army
Property Number: 21199011282
Status: Unutilized
Directions:
Comments: Friable asbestos
Reasons: Within 2000 ft. of flammable or explosive material; Other environmental; Secured Area

Bldg. 6532–6
Badger Army Ammunition Plant
Change House
Baraboo WI 53913
Landholding Agency: Army
Property Number: 21199011284
Status: Unutilized
Directions:
Comments: Friable asbestos
Reasons: Other environmental; Within 2000 ft. of flammable or explosive material; Secured Area

Bldg. 6532–7
Badger Army Ammunition Plant
Change House
Baraboo WI 53913
Landholding Agency: Army
Property Number: 21199011286
Status: Unutilized
Directions:
Comments: Friable asbestos
Reasons: Other environmental; Within 2000 ft. of flammable or explosive material; Secured Area

Bldg. 6532–8
Badger Army Ammunition Plant
Change House
Baraboo WI 53913
Landholding Agency: Army
Property Number: 21199011290
Status: Unutilized
Directions:
Comments: Friable asbestos
Reasons: Other environmental; Within 2000 ft. of flammable or explosive material; Secured Area

Bldg. 6532–9
Badger Army Ammunition Plant
Change House
Baraboo WI 53913
Landholding Agency: Army
Property Number: 21199011293
Status: Unutilized
Directions:
Comments: Friable asbestos
Reasons: Other environmental; Within 2000 ft. of flammable or explosive material; Secured Area

Bldg. 6532–10
Badger Army Ammunition Plant
Change House
Baraboo WI 53913
Landholding Agency: Army
Property Number: 21199011295
Status: Unutilized
Directions:
Comments: Friable asbestos
Reasons: Within 2000 ft. of flammable or explosive material; Other environmental; Secured Area

Bldg. 6532–11
Badger Army Ammunition Plant
Change House
Baraboo WI 53913
Landholding Agency: Army
Property Number: 21199011297
Status: Unutilized
Directions:
Comments: Friable asbestos
Reasons: Within 2000 ft. of flammable or explosive material; Other environmental; Secured Area

Bldg. 6532–12
Badger Army Ammunition Plant
Change House
Baraboo WI 53913
Landholding Agency: Army
Property Number: 21199011300
Status: Unutilized
Directions:
Comments: Friable asbestos
Reasons: Secured Area; Other environmental; Within 2000 ft. of flammable or explosive material

Bldg. 6532–13
Badger Army Ammunition Plant
Change House
Baraboo WI 53913
Landholding Agency: Army
Property Number: 21199011302
Status: Unutilized
Directions:
Comments: Friable asbestos
Reasons: Other environmental; Within 2000 ft. of flammable or explosive material; Secured Area

Bldg. 6532–14
Badger Army Ammunition Plant
Change House
Baraboo WI 53913
Landholding Agency: Army
Property Number: 21199011304
Status: Unutilized
Directions:
Comments: Friable asbestos
Reasons: Other environmental; Secured Area; Within 2000 ft. of flammable or explosive material

Bldg. 6532–15
Badger Army Ammunition Plant
Change House
Baraboo WI 53913
Landholding Agency: Army
Property Number: 21199011305
Status: Unutilized
Directions:
Comments: Friable asbestos
Reasons: Secured Area; Other environmental; Within 2000 ft. of flammable or explosive material

Bldg. 6532–16
Badger Army Ammunition Plant
Change House
Baraboo WI 53913
Landholding Agency: Army
Property Number: 21199011306
Status: Unutilized
Directions:
Comments: Friable asbestos
Reasons: Secured Area; Within 2000 ft. of flammable or explosive material; Other environmental

Bldg. 6532–17
Badger Army Ammunition Plant
Change House
Baraboo WI 53913
Landholding Agency: Army
Property Number: 21199011307
Status: Unutilized
Directions:
Comments: Friable asbestos
Reasons: Secured Area; Other environmental; Within 2000 ft. of flammable or explosive material

Bldg. 6532–18
Badger Army Ammunition Plant
Change House
Baraboo WI 53913
Landholding Agency: Army
Property Number: 21199011308
Status: Unutilized
Directions:
Comments: Friable asbestos
Reasons: Within 2000 ft. of flammable or explosive material; Other environmental; Secured Area

Bldg. 6532–19
Badger Army Ammunition Plant
Change House
Baraboo WI 53913
Landholding Agency: Army
Property Number: 21199011309
Status: Unutilized
Directions:
Comments: Friable asbestos
Reasons: Within 2000 ft. of flammable or explosive material; Other environmental; Secured Area

Bldg. 6532–20
Badger Army Ammunition Plant
Change House
Baraboo WI 53913
Landholding Agency: Army
Property Number: 21199011310
Status: Unutilized
Directions:
Comments: Friable asbestos
Reasons: Other environmental; Secured Area; Within 2000 ft. of flammable or explosive material

Bldg. 9016–1
Badger Army Ammunition Plant
Change House
Baraboo WI 53913
Landholding Agency: Army
Property Number: 21199011311
Status: Unutilized
Directions:
Comments: Friable asbestos
Reasons: Other environmental; Within 2000 ft. of flammable or explosive material; Secured Area

Bldg. 9016–3
Badger Army Ammunition Plant
Change House
Baraboo WI 53913
Landholding Agency: Army
Property Number: 21199011317
Status: Unutilized
Directions:
Comments: Friable asbestos
Reasons: Within 2000 ft. of flammable or explosive material; Other environmental; Secured Area

Bldg. 9504–1
Badger Army Ammunition Plant
Change House
Baraboo WI 53913
Landholding Agency: Army
Property Number: 21199011319
Status: Unutilized
Directions:
Comments: Friable asbestos
Reasons: Secured Area; Other environmental; Within 2000 ft. of flammable or explosive material

Bldg. 9504–2
Badger Army Ammunition Plant
Change House
Baraboo WI 53913
Landholding Agency: Army
Property Number: 21199011320
Status: Unutilized
Directions:
Comments: Friable asbestos
Reasons: Other environmental; Within 2000 ft. of flammable or explosive material; Secured Area

Bldg. 9504–3
Badger Army Ammunition Plant
Change House
Baraboo WI 53913
Landholding Agency: Army
Property Number: 21199011321
Status: Unutilized
Directions:
Comments: Friable asbestos
Reasons: Secured Area; Other environmental; Within 2000 ft. of flammable or explosive material

Bldg. 9504–4
Badger Army Ammunition Plant
Change House
Baraboo WI 53913
Landholding Agency: Army
Property Number: 21199011323
Status: Unutilized
Directions:
Comments: Friable asbestos
Reasons: Within 2000 ft. of flammable or explosive material; Other environmental; Secured Area

Bldg. 9030
Badger Army Ammunition Plant
Baraboo WI
Landholding Agency: Army
Property Number: 21199013871
Status: Underutilized
Directions:
Comments:
Reasons: Secured Area

Bldg. 264
Badger Army Ammunition Plant
Baraboo WI
Landholding Agency: Army
Property Number: 21199013872
Status: Underutilized
Directions:
Comments:
Reasons: Secured Area

Bldg. 6861–2
Badger Army Ammunition Plant
Baraboo WI
Landholding Agency: Army
Property Number: 21199013873
Status: Underutilized
Directions:
Comments:
Reasons: Secured Area

Bldg. 6861–6
Badger Army Ammunition Plant
Baraboo WI
Landholding Agency: Army
Property Number: 21199013875
Status: Underutilized

Directions:
Comments:
Reasons: Secured Area

Bldg. 6861–1
Badger Army Ammunition Plant
Baraboo WI
Landholding Agency: Army
Property Number: 21199013876
Status: Unutilized
Directions:
Comments:
Reasons: Secured Area

Bldg. 6861–3
Badger Army Ammunition Plant
Baraboo WI
Landholding Agency: Army
Property Number: 21199013877
Status: Unutilized
Directions:
Comments:
Reasons: Secured Area

Bldg. 6861–5
Badger Army Ammunition Plant
Baraboo WI
Landholding Agency: Army
Property Number: 21199013878
Status: Unutilized
Directions:
Comments:
Reasons: Secured Area

Bldg. 6513–27
Badger Army Ammunition Plant
Baraboo WI 53913
Landholding Agency: Army
Property Number: 21199210097
Status: Unutilized
Directions:
Comments:
Reasons: Within 2000 ft. of flammable or explosive material; Secured Area

Bldg. 6823–2
Badger Army Ammunition Plant
Baraboo WI 53913
Landholding Agency: Army
Property Number: 21199210098
Status: Unutilized
Directions:
Comments:
Reasons: Secured Area; Within 2000 ft. of flammable or explosive material

Bldg. 6861–4
Badger Army Ammunition Plant
Baraboo WI 53913
Landholding Agency: Army
Property Number: 21199210099
Status: Unutilized
Directions:
Comments:
Reasons: Secured Area; Within 2000 ft. of flammable or explosive material

Bldg. 6513–28
Badger Army Ammunition Plant
Baraboo WI 53913
Landholding Agency: Army
Property Number: 21199220295
Status: Unutilized
Directions:
Comments:
Reasons: Secured Area

Bldg. 6513–31
Badger Army Ammunition Plant
Baraboo WI 53913
Landholding Agency: Army
Property Number: 21199220296
Status: Unutilized
Directions:
Comments:
Reasons: Secured Area

Bldg. 6513–32
Badger Army Ammunition Plant
Baraboo WI 53913
Landholding Agency: Army
Property Number: 21199220297
Status: Unutilized
Directions:
Comments:
Reasons: Secured Area

Bldg. 6513–33
Badger Army Ammunition Plant
Baraboo WI 53913
Landholding Agency: Army
Property Number: 21199220298
Status: Unutilized
Directions:
Comments:
Reasons: Secured Area

Bldg. 6513–34
Badger Army Ammunition Plant
Baraboo WI 53913
Landholding Agency: Army
Property Number: 21199220299
Status: Unutilized
Directions:
Comments:
Reasons: Secured Area

Bldg. 6513–35
Badger Army Ammunition Plant
Baraboo WI 53913
Landholding Agency: Army
Property Number: 21199220300
Status: Unutilized
Directions:
Comments:
Reasons: Secured Area

Bldg. 6513–36
Badger Army Ammunition Plant
Baraboo WI 53913
Landholding Agency: Army
Property Number: 21199220301
Status: Unutilized
Directions:
Comments:
Reasons: Secured Area

Bldg. 6513–37
Badger Army Ammunition Plant
Baraboo WI 53913
Landholding Agency: Army
Property Number: 21199220302
Status: Unutilized
Directions:
Comments:
Reasons: Secured Area

Bldg. 6513–38
Badger Army Ammunition Plant
Baraboo WI 53913
Landholding Agency: Army
Property Number: 21199220303
Status: Unutilized
Directions:
Comments:
Reasons: Secured Area

Bldg. 6513–39
Badger Army Ammunition Plant
Baraboo WI 53913
Landholding Agency: Army
Property Number: 21199220304
Status: Unutilized
Directions:
Comments:
Reasons: Secured Area

Bldg. 6513–40
Badger Army Ammunition Plant
Baraboo WI 53913
Landholding Agency: Army
Property Number: 21199220305
Status: Unutilized
Directions:
Comments:
Reasons: Secured Area

Bldg. 6513–41
Badger Army Ammunition Plant
Baraboo WI 53913
Landholding Agency: Army
Property Number: 21199220306
Status: Unutilized
Directions:
Comments:
Reasons: Secured Area

Bldg. 6513–42
Badger Army Ammunition Plant
Baraboo WI 53913
Landholding Agency: Army
Property Number: 21199220307
Status: Unutilized
Directions:
Comments:
Reasons: Secured Area

Bldg. 6513–47
Badger Army Ammunition Plant
Baraboo WI 53913
Landholding Agency: Army
Property Number: 21199220308
Status: Unutilized
Directions:
Comments:
Reasons: Secured Area

Bldg. 6513–48
Badger Army Ammunition Plant
Baraboo WI 53913
Landholding Agency: Army
Property Number: 21199220309
Status: Unutilized
Directions:
Comments:
Reasons: Secured Area

Bldg. 6513–49
Badger Army Ammunition Plant
Baraboo WI 53913
Landholding Agency: Army
Property Number: 21199220310
Status: Unutilized
Directions:
Comments:
Reasons: Secured Area

Bldg. 6513–50
Badger Army Ammunition Plant
Baraboo WI 53913
Landholding Agency: Army
Property Number: 21199220311
Status: Unutilized
Directions:
Comments:
Reasons: Secured Area

Bldgs. 6657–2, 6659–2
Badger Army Ammunition Plant
Baraboo WI 53913
Landholding Agency: Army
Property Number: 21199510065
Status: Unutilized
Directions:
Comments:
Reasons: Secured Area

Bldgs. 6668–2 thru 6668–4
Badger Army Ammunition Plant
Baraboo WI 53913
Landholding Agency: Army
Property Number: 21199510067
Status: Unutilized
Directions:
Comments:
Reasons: Secured Area

Bldgs. 6808–9 thru 6808–16
Badger Army Ammunition Plant
Baraboo WI 53913
Landholding Agency: Army
Property Number: 21199510069
Status: Unutilized
Directions:
Comments:
Reasons: Secured Area; Extensive deterioration

28 Buildings
Badger Army Ammunition Plant
Baraboo WI 53913
Landholding Agency: Army
Property Number: 21199510070
Status: Unutilized
Directions: Include: 6807–28 thru 6807–33, 6807–36 thru 6807–53, 6807–58 thru 6807–61
Comments:
Reasons: Extensive deterioration; Secured Area

9 Buildings
Badger Army Ammunition Plant
Baraboo WI 53913
Landholding Agency: Army
Property Number: 21199510071
Status: Unutilized
Directions: Include: 6806–3, 6806–4, 6805–8 thru 6805–10, 6803–5 thru 6803–8
Comments:
Reasons: Extensive deterioration; Secured Area

Bldgs. 6804–15 thru 6804–21
Badger Army Ammunition Plant
Baraboo WI 53913
Landholding Agency: Army
Property Number: 21199510072
Status: Unutilized
Directions:
Comments:
Reasons: Secured Area; Extensive deterioration

7 Buildings
Badger Army Ammunition Plant
Baraboo WI 53913
Landholding Agency: Army
Property Number: 21199510073
Status: Unutilized
Directions: Include: 6953–2, 6956–2, 6955–2, 6957–2
Comments:
Reasons: Secured Area; Extensive deterioration

8 Buildings
Badger Army Ammunition Plant
Baraboo WI 53913
Landholding Agency: Army
Property Number: 21199510074
Status: Unutilized
Directions: Include: 6828–3, 6828–4, 6828–9, 6828–10, 6868–4 thru 6868–6, 6868–9
Comments:
Reasons: Extensive deterioration; Secured Area

5 Buildings
Badger Army Ammunition Plant
Baraboo WI 53913
Landholding Agency: Army
Property Number: 21199510075
Status: Unutilized
Directions: Include: 906–1–SL5, 6864–2, 6850–2, 6829–4, 6826–3
Comments:
Reasons: Extensive deterioration; Secured Area

21 Buildings
Badger Army Ammunition Plant
Baraboo WI 53913
Landholding Agency: Army
Property Number: 21199510076
Status: Unutilized
Directions: Include: 6815–1 thru 6815–13, 6816–7, 6816–8,6816–10, 6814–6 thru 6814–10
Comments:
Reasons: Secured Area; Extensive deterioration

31 Buildings
Badger Army Ammunition Plant
Baraboo WI 53913
Landholding Agency: Army
Property Number: 21199510077
Status: Unutilized
Directions: Include: 6810–17 thru 6810–32, 6810–39 thru 6810–44 6812–11 thru 6812–16, 6812–20 thru 6812–22
Comments:
Reasons: Secured Area; Extensive deterioration

5 Bldgs., Badger AAP
Paste Weigh House
6805–01 thru 6805–05
Baraboo WI 53913
Landholding Agency: Army
Property Number: 21199740184
Status: Unutilized
Directions:
Comments:
Reasons: Within 2000 ft. of flammable or explosive material; Extensive deterioration; Secured Area

10 Bldgs., Badger AAP
Roll House
Baraboo WI 53913
Landholding Agency: Army
Property Number: 21199740185
Status: Unutilized
Directions:
Comments:
Reasons: Within 2000 ft. of flammable or explosive material; Secured Area

4 Bldgs., Badger AAP
Slitting Roll
6802–02, 6802–3, 6802–5, 6802–7
Baraboo WI 53913
Landholding Agency: Army
Property Number: 21199740186
Status: Unutilized
Directions:
Comments:
Reasons: Secured Area; Within 2000 ft. of flammable or explosive material

2 Bldgs., Badger AAP
Press House
6810–04, 6810–07
Baraboo WI 53913
Landholding Agency: Army
Property Number: 21199740187
Status: Unutilized
Directions:
Comments:
Reasons: Within 2000 ft. of flammable or explosive material; Secured Area

7 Bldgs., Badger AAP
Inspection House
6816–01 thru 6816–06, 6816–09
Baraboo WI 53913
Landholding Agency: Army
Property Number: 21199740188
Status: Unutilized
Directions:
Comments:
Reasons: Secured Area; Within 2000 ft. of flammable or explosive material

Bldg. 6826–01, Badger AAP
Supersonic Scanning House
Baraboo WI 53913
Landholding Agency: Army
Property Number: 21199740189
Status: Unutilized
Directions:
Comments:
Reasons: Within 2000 ft. of flammable or explosive material; Secured Area

Bldg. 6878–00, Badger AAP
null
Baraboo WI 53913
Landholding Agency: Army
Property Number: 21199740190
Status: Unutilized
Directions:
Comments:
Reasons: Secured Area; Within 2000 ft. of flammable or explosive material

Bldg. 8008–00, Badger AAP
null
Baraboo WI 53913
Landholding Agency: Army
Property Number: 21199740191
Status: Unutilized
Directions:
Comments:
Reasons: Secured Area; Within 2000 ft. of flammable or explosive material

Bldg. 9016–02, Badger AAP
null
Baraboo WI 53913
Landholding Agency: Army
Property Number: 21199740192
Status: Unutilized
Directions:
Comments:
Reasons:
Secured Area; Within 2000 ft. of flammable or explosive material

Bldg. 9045–00, Badger AAP
null
Baraboo WI 53913
Landholding Agency: Army
Property Number: 21199740193
Status: Unutilized
Directions:
Comments:
Reasons: Secured Area; Within 2000 ft. of flammable or explosive material

13 Bldgs., Badger AAP
Latrines
Baraboo WI 53913
Landholding Agency: Army
Property Number: 21199740194
Status: Unutilized
Directions:
Comments:
Reasons: Secured Area; Within 2000 ft. of flammable or explosive material

Bldg. 9101–00, Badger AAP
null
Baraboo WI 53913
Landholding Agency: Army
Property Number: 21199740196
Status: Unutilized
Directions:
Comments:
Reasons: Within 2000 ft. of flammable or explosive material; Secured Area

3 Bldgs., Badger AAP
Telpher System
0923–03, 0923–04, 0923–07
Baraboo WI 53913
Landholding Agency: Army
Property Number: 21199740201
Status: Unutilized
Directions:
Comments:
Reasons: Secured Area; Within 2000 ft. of flammable or explosive material

12 Bldgs., Badger AAP
Solvent Recovery House
1600–19 thru 1600–30
Baraboo WI 53913
Landholding Agency: Army
Property Number: 21199740202
Status: Unutilized
Directions:
Comments:
Reasons: Secured Area; Within 2000 ft. of flammable or explosive material

11 Bldgs., Badger AAP
Water Dry House
1650–20 thru 1650–30
Baraboo WI 53913
Landholding Agency: Army
Property Number: 21199740203
Status: Unutilized
Directions:
Comments:
Reasons: Within 2000 ft. of flammable or explosive material; Secured Area

5 Bldgs., Badger AAP
Air Dry House
1725–08 thru 1725–12
Baraboo WI 53913
Landholding Agency: Army
Property Number: 21199740204
Status: Unutilized
Directions:
Comments:
Reasons: Secured Area; Within 2000 ft. of flammable or explosive material

8 Bldgs., Badger AAP
Rest House
1750–13 thru 1750–19, 1750–21
Baraboo WI 53913
Landholding Agency: Army
Property Number: 21199740205
Status: Unutilized
Directions:
Comments:
Reasons: Within 2000 ft. of flammable or explosive material; Secured Area

6 Bldgs., Badger AAP
Glaze House
1800–02 thru 1800–07
Baraboo WI 53913
Landholding Agency: Army
Property Number: 21199740206
Status: Unutilized
Directions:
Comments:
Reasons: Secured Area; Within 2000 ft. of flammable or explosive material

8 Bldgs., Badger AAP
Screening House
1850–01 thru 1850–08
Baraboo WI 53913
Landholding Agency: Army
Property Number: 21199740207
Status: Unutilized
Directions:
Comments:
Reasons: Secured Area; Extensive deterioration; Within 2000 ft. of flammable or explosive material

4 Bldgs., Badger AAP
Screen Storehouse
1852–02 thru 1852–05
Baraboo WI 53913
Landholding Agency: Army
Property Number: 21199740208
Status: Unutilized
Directions:
Comments:
Reasons: Within 2000 ft. of flammable or explosive material; Secured Area

23 Bldgs., Badger AAP
Magazine Standard
Baraboo WI 53913
Landholding Agency: Army
Property Number: 21199740209
Status: Unutilized
Directions:
Comments:
Reasons: Secured Area; Within 2000 ft. of flammable or explosive material

6 Bldgs., Badger AAP
Hydro-Jet House
1996–13 thru 1996–18
Baraboo WI 53913
Landholding Agency: Army
Property Number: 21199740210
Status: Unutilized
Directions:
Comments:
Reasons: Secured Area; Within 2000 ft. of flammable or explosive material

Bldg. 3566–02, Badger AAP
null
Baraboo WI 53913
Landholding Agency: Army
Property Number: 21199740211
Status: Unutilized
Directions:
Comments:
Reasons: Within 2000 ft. of flammable or explosive material; Secured Area

2 Bldgs., Badger AAP
Dehy Press House
4500–00, 5500–00
Baraboo WI 53913
Landholding Agency: Army
Property Number: 21199740212
Status: Unutilized
Directions:
Comments:
Reasons: Within 2000 ft. of flammable or explosive material; Secured Area

2 Bldgs., Badger AAP
Alcohol Pump House
4501–00, 5501–00
Baraboo WI 53913
Landholding Agency: Army
Property Number: 21199740213
Status: Unutilized
Directions:
Comments:
Reasons: Secured Area; Within 2000 ft. of flammable or explosive material

2 Bldgs., Badger AAP
Ingredient Mix House
4506–00, 5506–00
Baraboo WI 53913
Landholding Agency: Army
Property Number: 21199740215
Status: Unutilized
Directions:
Comments:
Reasons: Within 2000 ft. of flammable or explosive material; Secured Area

4 Bldgs., Badger AAP
Mixer Macerator
4508–01, 4508–02, 5508–01, 5508–02
Baraboo WI 53913
Landholding Agency: Army
Property Number: 21199740216
Status: Unutilized
Directions:
Comments:
Reasons: Secured Area; Within 2000 ft. of flammable or explosive material

6 Bldgs., Badger AAP
Block Press
4510–01 thru 4510–03, 5510–01 thru 5510–03
Baraboo WI 53913
Landholding Agency: Army
Property Number: 21199740217
Status: Unutilized
Directions:
Comments:
Reasons: Within 2000 ft. of flammable or explosive material; Secured Area

5 Bldgs., Badger AAP
Final Press
4513–01 thru 4513–03, 5513–01, 5513–02
Baraboo WI 53913
Landholding Agency: Army
Property Number: 21199740218
Status: Unutilized
Directions:
Comments:
Reasons: Secured Area; Within 2000 ft. of flammable or explosive material

5 Bldgs., Badger AAP
Cutting House
4515–01 thru 4516–03, 5516–01, 5516–02
Baraboo WI 53913
Landholding Agency: Army
Property Number: 21199740219
Status: Unutilized
Directions:
Comments:
Reasons: Within 2000 ft. of flammable or explosive material; Secured Area

5 Bldgs., Badger AAP
Loading Platform
4517–01 thru 4517–03, 5517–01, 5517–02
Baraboo WI 53913
Landholding Agency: Army
Property Number: 21199740220
Status: Unutilized
Directions:
Comments:
Reasons: Within 2000 ft. of flammable or explosive material; Secured Area

2 Bldgs., Badger AAP
Hydraulic Station
4521–00, 5521–00
Baraboo WI 53913
Landholding Agency: Army
Property Number: 21199740221
Status: Unutilized
Directions:

Comments:
Reasons: Secured Area; Within 2000 ft. of flammable or explosive material

3 Bldgs., Badger AAP
Maintenance Shop
4549–00, 5549–00, 5045–00
Baraboo WI 53913
Landholding Agency: Army
Property Number: 21199740222
Status: Unutilized
Directions:
Comments:
Reasons: Within 2000 ft. of flammable or explosive material; Secured Area

Bldg. 4555–00, Badger AAP
ACR Bldg.
Baraboo WI 53913
Landholding Agency: Army
Property Number: 21199740223
Status: Unutilized
Directions:
Comments:
Reasons: Within 2000 ft. of flammable or explosive material; Secured Area

6 Bldgs., Badger AAP
Material Store
Baraboo WI 53913
Landholding Agency: Army
Property Number: 21199740224
Status: Unutilized
Directions:
4558–01, 4558–02, 4567–00, 5558–01, 5558–02, 5567–00
Comments:
Reasons: Secured Area; Within 2000 ft. of flammable or explosive material

2 Bldgs., Badger AAP
Acid Mix
5002–00, 9002–00
Baraboo WI 53913
Landholding Agency: Army
Property Number: 21199740225
Status: Unutilized
Directions:
Comments:
Reasons: Within 2000 ft. of flammable or explosive material; Secured Area

2 Bldgs., Badger AAP
Acid Screening
5007–00, 9007–00
Baraboo WI 53913
Landholding Agency: Army
Property Number: 21199740226
Status: Unutilized
Directions:
Comments:
Reasons: Within 2000 ft. of flammable or explosive material; Secured Area

2 Bldgs., Badger AAP
Acid Heat
5008–00, 9008–00
Baraboo WI 53913
Landholding Agency: Army
Property Number: 21199740227
Status: Unutilized
Directions:
Comments:
Reasons: Secured Area; Within 2000 ft. of flammable or explosive material

3 Bldgs., Badger AAP
Cellulose Drying House
5010–00, 5044–00, 9010–00
Baraboo WI 53913
Landholding Agency: Army
Property Number: 21199740228
Status: Unutilized
Directions:
Comments:
Reasons: Secured Area; Within 2000 ft. of flammable or explosive material

2 Bldgs., Badger AAP
Catch House
5011–00, 9011–00
Baraboo WI 53913
Landholding Agency: Army
Property Number: 21199740229
Status: Unutilized
Directions:
Comments:
Reasons: Within 2000 ft. of flammable or explosive material; Secured Area

2 Bldgs., Badger AAP
Nitrating House
5012–00, 9012–00
Baraboo WI 53913
Landholding Agency: Army
Property Number: 21199740230
Status: Unutilized
Directions:
Comments:
Reasons: Secured Area; Within 2000 ft. of flammable or explosive material1

8 Bldgs., Badger AAP
Steam Pressure Reducing Station
Baraboo WI 53913
Landholding Agency: Army
Property Number: 21199740231
Status: Unutilized
Directions:
Comments:
Reasons: Within 2000 ft. of flammable or explosive material; Secured Area

2 Bldgs., Badger AAP
Steam Pressure Reducing Station
000E–02, 000F–02
Baraboo WI 53913
Landholding Agency: Army
Property Number: 21199740232
Status: Unutilized
Directions:
Comments:
Reasons: Secured Area; Within 2000 ft. of flammable or explosive material

Bldg. 0021–03, Badger AAP
null
Baraboo WI 53913
Landholding Agency: Army
Property Number: 21199740233
Status: Unutilized
Directions:
Comments:
Reasons: Secured Area; Within 2000 ft. of flammable or explosive material

Bldg. 0202–04, Badger AAP
null
Baraboo WI 53913
Landholding Agency: Army
Property Number: 21199740234
Status: Unutilized
Directions:
Comments:
Reasons: Within 2000 ft. of flammable or explosive material; Secured Area

Bldg. 0204–B1, Badger AAP
null
Baraboo WI 53913
Landholding Agency: Army
Property Number: 21199740235
Status: Unutilized
Directions:
Comments:
Reasons: Secured Area; Within 2000 ft. of flammable or explosive material

Bldg. 0271–00, Badger AAP
null
Baraboo WI 53913
Landholding Agency: Army
Property Number: 21199740236
Status: Unutilized
Directions:
Comments:
Reasons: Within 2000 ft. of flammable or explosive material; Secured Area

4 Bldgs., Badger AAP
0308–01, 0308–02, 0308–03, 0316–00
Baraboo WI 53913
Landholding Agency: Army
Property Number: 21199740237
Status: Unutilized
Directions:
Comments:
Reasons: Secured Area; Within 2000 ft. of flammable or explosive material

Bldg. 0312–00, Badger AAP
null
Baraboo WI 53913
Landholding Agency: Army
Property Number: 21199740238
Status: Unutilized
Directions:
Comments:
Reasons: Within 2000 ft. of flammable or explosive material; Secured Area; Extensive deterioration

Bldg. 0318–00, Badger AAP
null
Baraboo WI 53913
Landholding Agency: Army
Property Number: 21199740239
Status: Unutilized
Directions:
Comments:
Reasons: Within 2000 ft. of flammable or explosive material; Secured Area

Bldg. 0402–00, Badger AAP
null
Baraboo WI 53913
Landholding Agency: Army
Property Number: 21199740240
Status: Unutilized
Directions:
Comments:
Reasons: Within 2000 ft. of flammable or explosive material; Secured Area

2 Bldgs., Badger AAP
Waste Acid Disposal Plant
0420–04, 0420–06
Baraboo WI 53913
Landholding Agency: Army
Property Number: 21199740241
Status: Unutilized
Directions:
Comments:
Reasons: Secured Area; Within 2000 ft. of flammable or explosive material

Bldg. 0425, Badger AAP
PH Recorder
Baraboo WI 53913
Landholding Agency: Army
Property Number: 21199740242
Status: Unutilized
Directions:
Comments:
Reasons: Within 2000 ft. of flammable or explosive material; Secured Area

2 Bldgs., Badger AAP
Storage Shed
0429–01, 0429–02
Baraboo WI 53913
Landholding Agency: Army
Property Number: 21199740243
Status: Unutilized
Directions:
Comments:
Reasons: Secured Area; Within 2000 ft. of flammable or explosive material

Bldg. 0534–00, Badger AAP
Fire Station #2
Baraboo WI 53913
Landholding Agency: Army
Property Number: 21199740244
Status: Unutilized
Directions:
Comments:
Reasons: Within 2000 ft. of flammable or explosive material; Secured Area

2 Bldgs., Badger AAP
Nitric Circulator
0705–00, 0706–00
Baraboo WI 53913
Landholding Agency: Army
Property Number: 21199740246
Status: Unutilized
Directions:
Comments:
Reasons: Secured Area; Within 2000 ft. of flammable or explosive material

2 Bldgs., Badger AAP
Fume Exhaust
5013–00, 9013–00
Baraboo WI 53913
Landholding Agency: Army
Property Number: 21199740247
Status: Unutilized
Directions:
Comments:
Reasons: Secured Area; Within 2000 ft. of flammable or explosive material

2 Bldgs., Badger AAP
NC Pump House
5014–00, 9014–00
Baraboo WI 53913
Landholding Agency: Army
Property Number: 21199740248
Status: Unutilized
Directions:
Comments:
Reasons: Within 2000 ft. of flammable or explosive material; Secured Area

2 Bldgs., Badger AAP
Boiling Tub House
5019–00, 9019–00
Baraboo WI 53913
Landholding Agency: Army
Property Number: 21199740249
Status: Unutilized
Directions:
Comments:
Reasons: Secured Area; Within 2000 ft. of flammable or explosive material

4 Bldgs., Badger AAP
Settling Pit
5020–00, 9020–00, 5025–00, 9025–00
Baraboo WI 53913
Landholding Agency: Army
Property Number: 21199740250
Status: Unutilized
Directions:
Comments:
Reasons: Within 2000 ft. of flammable or explosive material; Secured Area

2 Bldgs., Badger AAP
Beater House
5022–00, 9022–00
Baraboo WI 53913
Landholding Agency: Army
Property Number: 21199740251
Status: Unutilized
Directions:
Comments:
Reasons: Within 2000 ft. of flammable or explosive material; Secured Area

2 Bldgs., Badger AAP
Poacher
5024–00, 9024–00
Baraboo WI 53913
Landholding Agency: Army
Property Number: 21199740252
Status: Unutilized
Directions:
Comments:
Reasons: Secured Area; Within 2000 ft. of flammable or explosive material

4 Bldgs., Badger AAP
Final Wringer
5026–00, 5043–00, 9026–00, 9043–00
Baraboo WI 53913
Landholding Agency: Army
Property Number: 21199740253
Status: Unutilized
Directions:
Comments:
Reasons: Secured Area; Within 2000 ft. of flammable or explosive material

2 Bldgs., Badger AAP
Spent Acid Pump
5035–00, 9035–00
Baraboo WI 53913
Landholding Agency: Army
Property Number: 21199740254
Status: Unutilized
Directions:
Comments:
Reasons: Secured Area; Within 2000 ft. of flammable or explosive material

2 Bldgs., Badger AAP
Maintenance Shop
5037–00, 9037–00
Baraboo WI 53913
Landholding Agency: Army
Property Number: 21199740255
Status: Unutilized
Directions:
Comments:
Reasons: Secured Area; Within 2000 ft. of flammable or explosive material

2 Bldgs., Badger AAP
Chemical Storehouse
5038–00, 9038–00
Baraboo WI 53913
Landholding Agency: Army
Property Number: 21199740256
Status: Unutilized
Directions:
Comments:
Reasons: Secured Area; Within 2000 ft. of flammable or explosive material

Bldg. 5555–00, Badger AAP
ACR Bldg. Work
Baraboo WI 53913
Landholding Agency: Army
Property Number: 21199740257
Status: Unutilized
Directions:
Comments:
Reasons: Within 2000 ft. of flammable or explosive material; Secured Area

Bldg. 5557–03, Badger AAP
Change House
Baraboo WI 53913
Landholding Agency: Army
Property Number: 21199740258
Status: Unutilized
Directions:
Comments:
Reasons: Within 2000 ft. of flammable or explosive material; Secured Area

13 Bldgs., Badger AAP
Latrines
Baraboo WI 53913
Landholding Agency: Army
Property Number: 21199740259
Status: Unutilized
Directions:
6513–05, 11, 25, 26, 29, 45, 9063–06 thru 10, 13, 14
Comments:
Reasons: Secured Area; Within 2000 ft. of flammable or explosive material

2 Bldgs., Badger AAP
Transfer Shed
6531–01, 02
Baraboo WI 53913
Landholding Agency: Army
Property Number: 21199740260
Status: Unutilized
Directions:
Comments:
Reasons: Secured Area; Within 2000 ft. of flammable or explosive material

Bldg. 6538–00, Badger AAP
Powerhouse #2
Baraboo WI 53913
Landholding Agency: Army
Property Number: 21199740261
Status: Unutilized
Directions:
Comments:
Reasons: Within 2000 ft. of flammable or explosive material; Secured Area

2 Bldgs., Badger AAP
Gate House
6543–02, 6543–04
Baraboo WI 53913
Landholding Agency: Army
Property Number: 21199740262
Status: Unutilized
Directions:
Comments:
Reasons: Within 2000 ft. of flammable or explosive material; Secured Area

3 Bldgs., Badger AAP
Inspection House
6543–11, 13, 14
Baraboo WI 53913
Landholding Agency: Army
Property Number: 21199740264
Status: Unutilized
Directions:
Comments:
Reasons: Secured Area; Within 2000 ft. of flammable or explosive material

2 Bldgs., Badger AAP
Inert Storage
6586–04, 05
Baraboo WI 53913
Landholding Agency: Army
Property Number: 21199740266
Status: Unutilized
Directions:
Comments:
Reasons: Within 2000 ft. of flammable or explosive material; Secured Area

10 Bldgs., Badger AAP
Pre-Dry House
6709–14, 15, 16, 20, 22, 23, 24, 25, 26, 28
Baraboo WI 53913
Landholding Agency: Army
Property Number: 21199740268
Status: Unutilized
Directions:
Comments:
Reasons: Extensive deterioration; Within 2000 ft. of flammable or explosive material; Secured Area

11 Bldgs., Badger AAP
Rest House
Baraboo WI 53913
Landholding Agency: Army
Property Number: 21199740269
Status: Unutilized
Directions: 6726–02, 6803–01, 02, 03, 04, 6812–08, 17, 18, 19, 6828–07, 6882–02
Comments:
Reasons: Within 2000 ft. of flammable or explosive material; Secured Area

3 Bldgs., Badger AAP
Rest House
6804–01, 08, 14
Baraboo WI 53913
Landholding Agency: Army
Property Number: 21199740271
Status: Unutilized
Directions:
Comments:
Reasons: Secured Area; Within 2000 ft. of flammable or explosive material

Bldg. 0423–0
Badger AAP
Baraboo WI 53913
Landholding Agency: Army
Property Number: 21200020083
Status: Unutilized
GSA Number:
Reasons: Secured Area; Within 2000 ft. of flammable or explosive material

Bldg. 0931–0
Badger AAP
Baraboo WI 53913
Landholding Agency: Army
Property Number: 21200020084
Status: Unutilized
GSA Number:
Reasons: Secured Area; Within 2000 ft. of flammable or explosive material

Bldg. 1800–1
Badger AAP
Baraboo WI 53913
Landholding Agency: Army
Property Number: 21200020085
Status: Unutilized
GSA Number:
Reasons: Secured Area; Within 2000 ft. of flammable or explosive material

Bldgs. 1805–1, 1805–2, 1852–1
Badger AAP
Baraboo WI 53913
Landholding Agency: Army
Property Number: 21200020086
Status: Unutilized
GSA Number:
Reasons: Secured Area; Within 2000 ft. of flammable or explosive material

Bldgs. 1994–0, 1995–0
Badger AAP
Baraboo WI 53913
Landholding Agency: Army
Property Number: 21200020087
Status: Unutilized
GSA Number:
Reasons: Within 2000 ft. of flammable or explosive material; Secured Area

Bldgs. 3502–0, 3566–1
Badger AAP
Baraboo WI 53913
Landholding Agency: Army
Property Number: 21200020088
Status: Unutilized
GSA Number:
Reasons: Within 2000 ft. of flammable or explosive material; Secured Area

Bldg. 4524–4
Badger AAP
Baraboo WI 53913
Landholding Agency: Army
Property Number: 21200020089
Status: Unutilized
GSA Number:
Reasons:
Within 2000 ft. of flammable or explosive material; Secured Area

Bldg. 6536–0
Badger AAP
Baraboo WI 53913
Landholding Agency: Army
Property Number: 21200020090
Status: Unutilized
GSA Number:
Reasons: Secured Area; Within 2000 ft. of flammable or explosive material

Bldgs. 6662–0, 6666–0, 6669–0
Badger AAP
Baraboo WI 53913
Landholding Agency: Army
Property Number: 21200020091
Status: Unutilized
GSA Number:
Reasons: Secured Area

Bldgs. 6706–2, 6712–0, 6724–0
Badger AAP
Baraboo WI 53913
Landholding Agency: Army
Property Number: 21200020092
Status: Unutilized
GSA Number:
Reasons: Within 2000 ft. of flammable or explosive material; Secured Area

Bldgs. 6731–2, -3, -4
Badger AAP
Baraboo WI 53913
Landholding Agency: Army
Property Number: 21200020093
Status: Unutilized
GSA Number:
Reasons: Within 2000 ft. of flammable or explosive material; Secured Area

5 Bldgs.
Badger AAP
Baraboo WI 53913
Landholding Agency: Army
Property Number: 21200020094
Status: Unutilized
GSA Number:
Directions: 6732–0, 6732–1, 6736–0, 6738–0, 6738–1
Reasons: Within 2000 ft. of flammable or explosive material; Secured Area

5 Bldgs.
Badger AAP
Baraboo WI 53913
Landholding Agency: Army
Property Number: 21200020095
Status: Unutilized
GSA Number:
Directions: 6826–2, 6850–1, 6863–0, 6881–0, 6882–1
Reasons: Secured Area; Within 2000 ft. of flammable or explosive material

4 Bldgs.
Badger AAP
Baraboo WI 53913
Landholding Agency: Army
Property Number: 21200020096
Status: Unutilized
GSA Number:
Directions: 6953–1, 6955–1, 6956–1, 6957–1
Reasons: Secured Area; Within 2000 ft. of flammable or explosive material

12 Bldgs.
Badger AAP
Baraboo WI 53913
Landholding Agency: Army
Property Number: 21200020097
Status: Unutilized
GSA Number:
Directions: 1725–1 thru 7, 1725–13 thru 17
Reasons: Secured Area; Within 2000 ft. of flammable or explosive material

Bldgs. 1810–1 thru 4
Badger AAP
Baraboo WI 53913
Landholding Agency: Army
Property Number: 21200020098
Status: Unutilized
GSA Number:
Reasons: Secured Area; Within 2000 ft. of flammable or explosive material

Bldgs. 1825–1 thru 4
Badger AAP
Baraboo WI 53913
Landholding Agency: Army
Property Number: 21200020099
Status: Unutilized
GSA Number:
Reasons: Within 2000 ft. of flammable or explosive material; Secured Area

Bldgs. 1875–1 thru 4
Badger AAP
Baraboo WI 53913
Landholding Agency: Army
Property Number: 21200020100
Status: Unutilized
GSA Number:
Reasons: Secured Area; Within 2000 ft. of flammable or explosive material

13 Bldgs.
Badger AAP
Baraboo WI 53913
Landholding Agency: Army
Property Number: 21200020101
Status: Unutilized
GSA Number:
Directions: 1996–1 thru 10, 1996–19 thru 21
Reasons: Secured Area; Within 2000 ft. of flammable or explosive material

Bldgs. 2002–0, 3002–0, 4002–0
Badger AAP
Baraboo WI 53913
Landholding Agency: Army
Property Number: 21200020102
Status: Unutilized
GSA Number:
Reasons: Secured Area; Within 2000 ft. of flammable or explosive material

Bldgs. 2003–0, 3003–0, 4003–0
Badger AAP
Baraboo WI 53913

Landholding Agency: Army
Property Number: 21200020103
Status: Unutilized
GSA Number:
Reasons: Secured Area; Within 2000 ft. of flammable or explosive material

Bldgs. 2005–0, 3005–0, 4005–0
Badger AAP
Baraboo WI 53913
Landholding Agency: Army
Property Number: 21200020104
Status: Unutilized
GSA Number:
Reasons: Within 2000 ft. of flammable or explosive material; Secured Area

Bldgs. 2007–0, 3007–0, 4007–0
Badger AAP
Baraboo WI 53913
Landholding Agency: Army
Property Number: 21200020105
Status: Unutilized
GSA Number:
Reasons: Secured Area; Within 2000 ft. of flammable or explosive material

Bldgs. 2008–0, 3008–0, 4008–0
Badger AAP
Baraboo WI 53913
Landholding Agency: Army
Property Number: 21200020106
Status: Unutilized
GSA Number:
Reasons: Within 2000 ft. of flammable or explosive material; Secured Area

Bldgs. 2011–0, 3011–0, 4011–0
Badger AAP
Baraboo WI 53913
Landholding Agency: Army
Property Number: 21200020107
Status: Unutilized
GSA Number:
Reasons: Secured Area; Within 2000 ft. of flammable or explosive material

Bldgs. 2012–0, 3012–0, 4012–0
Badger AAP
Baraboo WI 53913
Landholding Agency: Army
Property Number: 21200020108
Status: Unutilized
GSA Number:
Reasons: Within 2000 ft. of flammable or explosive material; Secured Area

Bldgs. 2013–0, 3013–0, 4013–0
Badger AAP
Baraboo WI 53913
Landholding Agency: Army
Property Number: 21200020109
Status: Unutilized
GSA Number:
Reasons: Secured Area; Within 2000 ft. of flammable or explosive material

4 Bldgs.
Badger AAP
Baraboo WI 53913
Landholding Agency: Army
Property Number: 21200020110
Status: Unutilized
GSA Number:
Directions: 8002–0, 8003–0, 8004–0, 8006–0
Reasons: Secured Area; Within 2000 ft. of flammable or explosive material

Bldgs. 0420–01, 02, 03
Badger AAP
Baraboo WI 53913
Landholding Agency: Army
Property Number: 21200020111
Status: Unutilized
GSA Number:
Reasons: Secured Area; Within 2000 ft. of flammable or explosive material

Bldgs. 0712–17, 18, 19
Badger AAP
Baraboo WI 53913
Landholding Agency: Army
Property Number: 21200020112
Status: Unutilized
GSA Number:
Reasons: Within 2000 ft. of flammable or explosive material; Secured Area

Bldgs. 0923–01, 02, 05, 06, 08
Badger AAP
Baraboo WI 53913
Landholding Agency: Army
Property Number: 21200020113
Status: Unutilized
GSA Number:
Reasons: Secured Area; Within 2000 ft. of flammable or explosive material

29 Bldgs.
Badger AAP
Baraboo WI 53913
Landholding Agency: Army
Property Number: 21200020114
Status: Unutilized
GSA Number:
Directions: 1600–01 thru 18, 1600–31 thru 39, 41, 42
Reasons: Within 2000 ft. of flammable or explosive material; Secured Area

Bldgs. 1650–36 thru 42
Badger AAP
Baraboo WI 53913
Landholding Agency: Army
Property Number: 21200020115
Status: Unutilized
GSA Number:
Reasons: Within 2000 ft. of flammable or explosive material; Secured Area

Bldgs. 2014–0, 3014–0, 4014–0
Badger AAP
Baraboo WI 53913
Landholding Agency: Army
Property Number: 21200020116
Status: Unutilized
GSA Number:
Reasons: Secured Area; Within 2000 ft. of flammable or explosive material

Bldgs. 2019–0, 3019–0, 4019–0
Badger AAP
Baraboo WI 53913
Landholding Agency: Army
Property Number: 21200020117
Status: Unutilized
GSA Number:
Reasons: Secured Area; Within 2000 ft. of flammable or explosive material

Bldgs. 2020–0, 3020–0, 4020–0
Badger AAP
Baraboo WI 53913
Landholding Agency: Army
Property Number: 21200020118
Status: Unutilized
GSA Number:
Reasons: Within 2000 ft. of flammable or explosive material; Secured Area

Bldgs. 2022–0, 3022–0, 4022–0
Badger AAP
Baraboo WI 53913
Landholding Agency: Army
Property Number: 21200020119
Status: Unutilized
GSA Number:
Reasons: Secured Area; Within 2000 ft. of flammable or explosive material

6 Bldgs.
Badger AAP
Baraboo WI 53913
Landholding Agency: Army
Property Number: 21200020120
Status: Unutilized
GSA Number:
Directions: 2024–0, 3024–0, 4024–0, 2025–0, 3025–0, 4025–0
Reasons: Within 2000 ft. of flammable or explosive material; Secured Area

Bldgs. 2026–0, 3026–0, 4026–0
Badger AAP
Baraboo WI 53913
Landholding Agency: Army
Property Number: 21200020121
Status: Unutilized
GSA Number:
Reasons: Secured Area; Within 2000 ft. of flammable or explosive material

Bldgs. 2035–0, 3035–0, 4035–0
Badger AAP
Baraboo WI 53913
Landholding Agency: Army
Property Number: 21200020122
Status: Unutilized
GSA Number:
Reasons: Secured Area; Within 2000 ft. of flammable or explosive material

Bldgs. 2043–0, 3043–0, 4043–0
Badger AAP
Baraboo WI 53913
Landholding Agency: Army
Property Number: 21200020123
Status: Unutilized
GSA Number:
Reasons: Within 2000 ft. of flammable or explosive material; Secured Area

Bldgs. 2046–0, 3046–0, 4046–0
Badger AAP
Baraboo WI 53913
Landholding Agency: Army
Property Number: 21200020124
Status: Unutilized
GSA Number:
Reasons: Secured Area; Within 2000 ft. of flammable or explosive material

Bldgs. 2500–0, 3500–0
Badger AAP
Baraboo WI 53913
Landholding Agency: Army
Property Number: 21200020125
Status: Unutilized
GSA Number:
Reasons: Within 2000 ft. of flammable or explosive material; Secured Area

Bldgs. 2501–0, 3501–0
Badger AAP
Baraboo WI 53913
Landholding Agency: Army
Property Number: 21200020126
Status: Unutilized
GSA Number:
Reasons: Secured Area; Within 2000 ft. of flammable or explosive material

7 Bldgs.
Badger AAP
Baraboo WI 53913
Landholding Agency: Army

Property Number: 21200020127
Status: Unutilized
GSA Number:
Directions: 2506–0, 3506–0, 4506–0, 2508–1, 2508–2, 3508–1, 3508–2
Reasons: Within 2000 ft. of flammable or explosive material; Secured Area

13 Bldgs.
Badger AAP
Baraboo WI 53913
Landholding Agency: Army
Property Number: 21200020128
Status: Unutilized
GSA Number:
Directions: 2510–1 thru 3, 3510–1 thru 3, 2513–1 thru 4, 3513–1 thru 3
Reasons: Within 2000 ft. of flammable or explosive material; Secured Area

5 Bldgs.
Badger AAP
Baraboo WI 53913
Landholding Agency: Army
Property Number: 21200020129
Status: Unutilized
GSA Number:
Directions: 2517–1, 2517–2, 3517–1, 3517–2, 3517–3
Reasons: Within 2000 ft. of flammable or explosive material; Secured Area

6 Bldgs.
Badger AAP
Baraboo WI 53913
Landholding Agency: Army
Property Number: 21200020130
Status: Unutilized
GSA Number:
Directions: 2546–1 thru 4, 2555–0, 3555–0
Reasons: Within 2000 ft. of flammable or explosive material; Secured Area

Bldg. 3044–0
Badger AAP
Baraboo WI 53913
Landholding Agency: Army
Property Number: 21200020131
Status: Unutilized
GSA Number:
Reasons: Within 2000 ft. of flammable or explosive material; Secured Area

Bldgs. 3502–1, 3502–2
Badger AAP
Baraboo WI 53913
Landholding Agency: Army
Property Number: 21200020132
Status: Unutilized
GSA Number:
Reasons: Within 2000 ft. of flammable or explosive material; Secured Area

Bldgs. 3516–1, 2, 3
Badger AAP
Baraboo WI 53913
Landholding Agency: Army
Property Number: 21200020133
Status: Unutilized
GSA Number:
Reasons: Secured Area; Within 2000 ft. of flammable or explosive material

Bldgs. 4524–1, 2, 3
Badger AAP
Baraboo WI 53913
Landholding Agency: Army
Property Number: 21200020134
Status: Unutilized
GSA Number:
Reasons: Secured Area; Within 2000 ft. of flammable or explosive material

22 Bldgs.
Badger AAP
Baraboo WI 53913
Landholding Agency: Army
Property Number: 21200020135
Status: Unutilized
GSA Number:
Directions: 6513–1, 6513–6 thru 10, 6513–13 thru 24, 6513–30, 6513–43, 6513–44, 6513–46
Reasons: Secured Area; Within 2000 ft. of flammable or explosive material

Bldgs. 6529–0, 6586–1
Badger AAP
Baraboo WI 53913
Landholding Agency: Army
Property Number: 21200020136
Status: Unutilized
GSA Number:
Reasons: Secured Area; Within 2000 ft. of flammable or explosive material

Bldgs. 6672–1, 6672–2
Badger AAP
Baraboo WI 53913
Landholding Agency: Army
Property Number: 21200020138
Status: Unutilized
GSA Number:
Reasons: Secured Area; Within 2000 ft. of flammable or explosive material

4 Bldgs.
Badger AAP
Baraboo WI 53913
Landholding Agency: Army
Property Number: 21200020139
Status: Unutilized
GSA Number:
Directions: 6702–3, 6702–4, 6704–3, 6704–4
Reasons: Secured Area; Within 2000 ft. of flammable or explosive material

Bldg. 6705–3, 6705–4
Badger AAP
Baraboo WI 53913
Landholding Agency: Army
Property Number: 21200020140
Status: Unutilized
GSA Number:
Reasons: Secured Area; Within 2000 ft. of flammable or explosive material

15 Bldgs.
Badger AAP
Baraboo WI 53913
Landholding Agency: Army
Property Number: 21200020141
Status: Unutilized
GSA Number:
Directions: 6709–2, 6709–5 thru 13, 6709–17 thru 19, 6709–21, 6709–27
Reasons: Secured Area; Within 2000 ft. of flammable or explosive material

11 Bldgs.
Badger AAP
Baraboo WI 53913
Landholding Agency: Army
Property Number: 21200020142
Status: Unutilized
GSA Number:
Directions: 6804–2 thru 7, 6804–9 thru 13
Reasons: Secured Area; Within 2000 ft. of flammable or explosive material

20 Bldgs.
Badger AAP
Baraboo WI 53913
Landholding Agency: Army
Property Number: 21200020143
Status: Unutilized
GSA Number:
Directions: 6807–1 thru 5, 6807–7 thru 10, 6807–12 thru 15, 6807–17, 6807–19 thru 21, 6807–24, 6807–54, 6807–56
Reasons: Secured Area; Within 2000 ft. of flammable or explosive material

4 Bldgs.
Badger AAP
Baraboo WI 53913
Landholding Agency: Army
Property Number: 21200020144
Status: Unutilized
GSA Number:
Directions: 6808–1, 4, 6, 8
Reasons: Secured Area; Within 2000 ft. of flammable or explosive material

20 Bldgs.
Badger AAP
Baraboo WI 53913
Landholding Agency: Army
Property Number: 21200020145
Status: Unutilized
GSA Number:
Directions: 6810–1 thru 3, 6810–5, 6810–6, 6810–8, 6810–10 thru 16, 33 thru 38
Reasons: Within 2000 ft. of flammable or explosive material; Secured Area

7 Bldgs.
Badger AAP
Baraboo WI 53913
Landholding Agency: Army
Property Number: 21200020146
Status: Unutilized
GSA Number:
Directions: 6812–1 thru 7
Reasons: Secured Area; Within 2000 ft. of flammable or explosive material

Bldgs. 6814–1 thru 5
Badger AAP
Baraboo WI 53913
Landholding Agency: Army
Property Number: 21200020147
Status: Unutilized
GSA Number:
Reasons: Within 2000 ft. of flammable or explosive material; Secured Area

Bldgs. 6817–1 thru 4
Badger AAP
Baraboo WI 53913
Landholding Agency: Army
Property Number: 21200020148
Status: Unutilized
GSA Number:
Reasons: Secured Area; Within 2000 ft. of flammable or explosive material

Bldgs. 6828–1, 2, 8
Badger AAP
Baraboo WI 53913
Landholding Agency: Army
Property Number: 21200020149
Status: Unutilized
GSA Number:
Reasons: Within 2000 ft. of flammable or explosive material; Secured Area

Bldgs. 6829–1, 2
Badger AAJP
Baraboo WI 53913
Landholding Agency: Army
Property Number: 21200020150
Status: Unutilized
GSA Number:
Reasons: Secured Area; Within 2000 ft. of flammable or explosive material

Bldgs. 6837–1, 2

Badger AAP
Baraboo WI 53913
Landholding Agency: Army
Property Number: 21200020151
Status: Unutilized
GSA Number:
Reasons: Within 2000 ft. of flammable or explosive material; Secured Area

Bldgs. 6868–1, 2, 3, 7, 8
Badger AAP
Baraboo WI 53913
Landholding Agency: Army
Property Number: 21200020152
Status: Unutilized
GSA Number:
Reasons: Within 2000 ft. of flammable or explosive material; Secured Area

Bldgs. 8000–1, 2, 3
Badger AAP
Baraboo WI 53913
Landholding Agency: Army
Property Number: 21200020153
Status: Unutilized
GSA Number:
Reasons: Secured Area; Within 2000 ft. of flammable or explosive material

28 Bldgs.
Badger AAP
Baraboo WI 53913
Landholding Agency: Army
Property Number: 21200020154
Status: Unutilized
GSA Number:
Directions: 9062–01 thru 18, 25, 28, 9063–01 thru 05, 11, 12, 15
Reasons: Secured Area; Within 2000 ft. of flammable or explosive material

45 Bldgs.
Badger AAP
Baraboo WI 53913
Landholding Agency: Army
Property Number: 21200020155
Status: Unutilized
GSA Number:
Directions: Steam Pressure Reducing Station
Reasons: Secured Area; Within 2000 ft. of flammable or explosive material

Bldg. 420–8
Badger Army Amo Plant
Baraboo WI 53913
Landholding Agency: Army
Property Number: 21200240074
Status: Unutilized
GSA Number:
Reasons: Secured Area; Within 2000 ft. of flammable or explosive material

Bldgs. 750, 751, 753
Badger Army Amo Plant
Baraboo WI 53913
Landholding Agency: Army
Property Number: 21200240075
Status: Unutilized
GSA Number:
Reasons: Within 2000 ft. of flammable or explosive material; Secured Area

Bldgs. 754–1 thru 754–6
Badger Army Amo Plant
Baraboo WI 53919
Landholding Agency: Army
Property Number: 21200240076
Status: Unutilized
GSA Number:
Reasons: Within 2000 ft. of flammable or explosive material; Secured Area

Bldgs. 763, 765, 768
Badger Army Amo Plant
Baraboo WI 53913
Landholding Agency: Army
Property Number: 21200240077
Status: Unutilized
GSA Number:
Reasons: Within 2000 ft. of flammable or explosive material; Secured Area

Bldgs. 770–1 thru 770–3
Badger Army Amo Plant
Baraboo WI 53913
Landholding Agency: Army
Property Number: 21200240078
Status: Unutilized
GSA Number:
Reasons: Secured Area; Within 2000 ft. of flammable or explosive material

Bldgs. 771, 00778
Badger Army Amo Plant
Baraboo WI 53913
Landholding Agency: Army
Property Number: 21200240079
Status: Unutilized
GSA Number:
Reasons: Secured Area; Within 2000 ft. of flammable or explosive material

Bldgs. 791, 793
Badger Army Amo Plant
Baraboo WI 53913
Landholding Agency: Army
Property Number: 21200240080
Status: Unutilized
GSA Number:
Reasons: Secured Area; Within 2000 ft. of flammable or explosive material

Bldgs. 302 and 303
USARC
Milwaukee WI
Landholding Agency: Army
Property Number: 21201120109
Status: Unutilized
Reasons: Secured Area

2 Bldgs
4850 W. Silver Spring Drive
Milwaukee WI 53218
Landholding Agency: Army
Property Number: 21201130021
Status: Unutilized
Directions: 302 & 303
Reasons: Extensive deterioration; Secured Area

Approx. 1 acre
Fort Meade
Anne Arundel MD 20755
Landholding Agency: Army
Property Number: 21200740017
Status: Unutilized
Reasons: Other—no public access

RNWYA
Aberdeen Proving Ground
Harford MD
Landholding Agency: Army
Property Number: 21200820143
Status: Unutilized
Reasons: Within airport runway clear zone

Landa
Aberdeen Proving Ground
Aberdeen Area/1500 sq. ft.
Harford MD 21005
Landholding Agency: Army
Property Number: 21200920046
Status: Unutilized
Reasons: Secured Area

Lande
Aberdeen Proving Ground
Harford MD 21005
Landholding Agency: Army
Property Number: 21200920047
Status: Unutilized
Directions: Edgewood Area/1500 sq. ft./2 acres/34 acres
Reasons: Secured Area

Land

Minnesota

Portion of R.R. Spur
Twin Cities Army Ammunition Plant
New Brighton MN 55112
Landholding Agency: Army
Property Number: 21199620472
Status: Unutilized
Directions:
Comments:
Reasons: Other—landlocked

Missouri

Bldg. TA002
Ft. Leonard Woods
FLW MO
Landholding Agency: Army
Property Number: 21201120010
Status: Excess
Reasons: Secured Area

New Jersey

Land
Armament Research Development Center
Route 15 North
Picatinny Arsenal NJ 07806
Landholding Agency: Army
Property Number: 21199013788
Status: Unutilized
Directions:
Comments:
Reasons: Secured Area

Spur Line/Right of Way
Armament Rsch., Dev., Center
Picatinny Arsenal NJ 07806–5000
Landholding Agency: Army
Property Number: 21199530143
Status: Unutilized
Directions:
Comments:
Reasons: Floodway

2.0 Acres, Berkshire Trail
Armament Rsch, Development Center
Picatinny Arsenal NJ 07806–5000
Landholding Agency: Army
Property Number: 21199910036
Status: Underutilized
GSA Number:
Reasons: Secured Area; Within 2000 ft. of flammable or explosive material

South Carolina

Skate Park
Ft. Jackson
Ft. Jackson SC
Landholding Agency: Army
Property Number: 21201220022
Status: Underutilized
Comments: Nat'l security concerns; public access denied & no alternative method to gain access w/out comprising nat'l security
Reasons: Secured Area

Basketball Court
Ft. Jackson
Ft. Jackson SC
Landholding Agency: Army
Property Number: 21201220025

Status: Unutilized
Comments: Nat'l security concerns; public access denied and no alternative method to gain access w/out comprising nat'l security
Reasons: Secured Area

Tennessee

Sites #1, #2, #3
Fort Campbell
Christian TN 42223
Landholding Agency: Army
Property Number: 21200920070
Status: Unutilized
Reasons: Secured Area

Texas

Land—Approx. 50 acres
Lone Star Army Ammunition Plant
Texarkana TX 75505–9100
Landholding Agency: Army
Property Number: 21199420308
Status: Unutilized
Directions:
Comments:
Reasons: Secured Area

Land 1
Brownwood
Brown TX 76801
Landholding Agency: Army
Property Number: 21201020034
Status: Unutilized
Reasons: Contamination

Utah

B–50000
Green River Test Complex
Green River UT 84525
Landholding Agency: Army
Property Number: 21201210047
Status: Unutilized
Comments: Nat'l security concerns; no public access and no alternative method to gain access
Reasons: Secured Area

Virginia

11 Bldgs.
Ft. Pickett Trng Ctr.
Blackstone VA 23824
Landholding Agency: Army
Property Number: 21201210050
Status: Excess
Directions: T2650, T2657, T2659, T2671, T2672, T2673, T2811, T2814, T2815, T2816, T2817
Comments: Nat'l security concerns; no public access and no alternative method to gain access
Reasons: Secured Area

[FR Doc. 2012–19960 Filed 8–28–12; 8:45 am]

BILLING CODE 4210–67–P

FEDERAL REGISTER

Vol. 77 Wednesday,

No. 168 August 29, 2012

Part III

Environmental Protection Agency

40 CFR Part 60

Standards of Performance for Stationary Gas Turbines; Standards of Performance for Stationary Combustion Turbines; Proposed Rule

ENVIRONMENTAL PROTECTION AGENCY

40 CFR Part 60

[EPA–HQ–OAR–2004–0490; FRL–9695–6]

RIN 2060–AQ29

Standards of Performance for Stationary Gas Turbines; Standards of Performance for Stationary Combustion Turbines

AGENCY: Environmental Protection Agency (EPA).

ACTION: Proposed rule.

SUMMARY: The EPA is proposing to amend the new source performance standards (NSPS) for stationary gas turbines and stationary combustion turbines. These amendments are primarily in response to issues raised by the regulated community. On July 6, 2006, the EPA promulgated amendments to the new source performance standards for stationary combustion turbines. On September 5, 2006, the Utility Air Regulatory Group filed a petition for reconsideration of certain aspects of the promulgated standards. The EPA is proposing to amend specific provisions in the NSPS to resolve issues and questions raised by the petition for reconsideration, and to address other technical and editorial issues. In addition, this proposed rule would amend the location and wording of existing paragraphs for clarity. The proposed amendments would increase the environmental benefits of the existing requirements because the emission standards would apply at all times. The proposed amendments would also promote efficiency by recognizing the environmental benefit of combined heat and power and the beneficial use of low energy content gases.

DATES: Comments must be received on or before October 29, 2012.

Public Hearing. If anyone contacts the EPA by September 10, 2012 requesting to speak at a public hearing, the EPA will hold a public hearing on or about September 13, 2012.

ADDRESSES: Submit your comments, identified by Docket ID No. EPA–HQ–OAR–2004–0490, by one of the following methods:

- *http://www.regulations.gov:* Follow the on-line instructions for submitting comments.
- *Email: a-and-r-docket@epa.gov.*
- *Fax:* (202) 566–9744.
- *Mail:* Air and Radiation Docket, U.S. EPA, Mail Code 6102T, 1200 Pennsylvania Ave. NW., Washington, DC 20460. Please include a total of two copies.
- *Hand Delivery:* EPA Docket Center, Docket ID Number EPA–HQ–OAR–2004–0490, EPA West Building, 1301 Constitution Ave. NW., Room 3334, Washington, DC, 20004. Such deliveries are accepted only during the Docket's normal hours of operation, and special arrangements should be made for deliveries of boxed information.

Instructions: Direct your comments to Docket ID No. EPA–HQ–OAR–2004–0490. The EPA's policy is that all comments received will be included in the public docket without change and may be made available online at *http://www.regulations.gov,* including any personal information provided, unless the comment includes information claimed to be Confidential Business Information (CBI) or other information whose disclosure is restricted by statute. Do not submit information that you consider to be CBI or otherwise protected through regulations.gov or email. Send or deliver information identified as CBI only to the following address: Roberto Morales, OAQPS Document Control Officer (C404–02), Office of Air Quality Planning and Standards, Environmental Protection Agency, Research Triangle Park, North Carolina 27711, Attention Docket ID No. EPA–HQ–OAR–2004–0490. Clearly mark the part or all of the information that you claim to be CBI. For CBI information in a disk or CD–ROM that you mail to the EPA, mark the outside of the disk or CD–ROM as CBI and then identify electronically within the disk or CD–ROM the specific information that is claimed as CBI. In addition to one complete version of the comment that includes information claimed as CBI, a copy of the comment that does not contain the information claimed as CBI must be submitted for inclusion in the public docket. Information so marked will not be disclosed except in accordance with procedures set forth in 40 CFR part 2. The *http://www.regulations.gov* Web site is an ''anonymous access'' system, which means the EPA will not know your identity or contact information unless you provide it in the body of your comment. If you send an email comment directly to the EPA without going through www.regulations.gov, your email address will be automatically captured and included as part of the comment that is placed in the public docket and made available on the Internet. If you submit an electronic comment, the EPA recommends that you include your name and other contact information in the body of your comment and with any disk or CD–ROM you submit. If the EPA cannot read your comment due to technical difficulties and cannot contact you for clarification, the EPA may not be able to consider your comment. Electronic files should avoid the use of special characters, any form of encryption, and be free of any defects or viruses. For additional information about the EPA's public docket visit the EPA Docket Center homepage at *http://www.epa.gov/dockets/.*

Docket: All documents in the docket are listed in the *http://www.regulations.gov* index. Although listed in the index, some information is not publicly available, e.g., CBI or other information whose disclosure is restricted by statute. Certain other material, such as copyrighted material, will be publicly available only in hard copy. Publicly available docket materials are available either electronically in *http://www.regulations.gov* or in hard copy at the Air and Radiation Docket EPA/DC, EPA West, Room 3334, 1301 Constitution Ave. NW., Washington, DC. The Public Reading Room is open from 8:30 a.m. to 4:30 p.m., Monday through Friday, excluding legal holidays. The telephone number for the Public Reading Room is (202) 566–1744, and the telephone number for the Air and Radiation Docket is (202) 566–1742.

Public Hearing: If a public hearing is requested, it will be held at the EPA Facility Complex in Research Triangle Park, North Carolina or at an alternate site nearby. Contact Ms. Pamela Garrett at (919) 541–7966 to request a hearing, to request to speak at a public hearing, to determine if a hearing will be held, or to determine the hearing location.

FOR FURTHER INFORMATION CONTACT: Mr. Christian Fellner, Energy Strategies Group, Sector Policies and Programs Division (D243–01), U.S. EPA, Research Triangle Park, NC 27711, telephone number (919) 541–4003, facsimile number (919) 541–5450, electronic mail (email) address: *fellner.christian@epa.gov.*

SUPPLEMENTARY INFORMATION: *Regulated Entities:* Entities potentially affected by this proposed action include, but are not limited to, the following:

Category	NAICS [1]	Examples of regulated entities
Industry	2211	Electric services.
	486210	Natural gas transmission.
	211111	Crude petroleum and natural gas.
	211112	Natural gas liquids.
	221	Electric and other services, combined.

[1] North American Industry Classification System (NAICS) code.

This table is not intended to be exhaustive, but rather provides a guide for readers regarding entities likely to be regulated by this proposed rule. To determine whether your facility is regulated by this proposed rule, you should examine the applicability criteria in §§ 60.4305 and 60.4310. If you have any questions regarding the applicability of this proposed rule to a particular entity, contact the person listed in the preceding **FOR FURTHER INFORMATION CONTACT** section.

WorldWide Web (WWW): Following the Administrator's signature, a copy of the proposed amendments will be posted on the Technology Transfer Network's (TTN) policy and guidance page for newly proposed or promulgated rules at *http://www.epa.gov/ttn/oarpg*. The TTN provides information and technology exchange in various areas of air pollution control.

Outline: The information presented in this preamble is organized as follows:

I. Background
II. Proposed Amendments
A. Applicability
B. NO_X Emissions Standard
C. SO_2 Emissions Standard
D. Malfunction Affirmative Defense
E. Electronic Data Submittal
F. Additional Proposed Amendments
G. Additional Request for Comments
III. Statutory and Executive Order Reviews
A. Executive Order 12866: Regulatory Planning and Review and Executive Order 13563: Improving Regulation and Regulatory Review
B. Paperwork Reduction Act
C. Regulatory Flexibility Act
D. Unfunded Mandates Reform Act (UMRA)
E. Executive Order 13132: Federalism
F. Executive Order 13175: Consultation and Coordination with Indian Tribal Governments
G. Executive Order 13045: Protection of Children from Environmental Health and Safety Risks
H. Executive Order 13211: Actions Concerning Regulations That Significantly Affect Energy Supply, Distribution, or Use
I. National Technology Transfer Advancement Act
J. Executive Order 12898: Federal Actions to Address Environmental Justice in Minority Populations and Low-Income Populations.

I. Background

On July 6, 2006, the EPA promulgated revised new source performance standards (NSPS) for stationary combustion turbines (subpart KKKK of 40 CFR part 60) applicable to stationary combustion turbines on which construction, modification or reconstruction is commenced after February 18, 2005 (71 FR 38482). The new standards in subpart KKKK reflect advances in turbine design and nitrogen oxide (NO_X) emission control technologies since the standards for these units were originally promulgated in 1979 in subpart GG of 40 CFR part 60 (44 FR 52798). The new standards also reflect the use of lower sulfur fuels.

A petition for reconsideration of the revised NSPS was filed by the Utility Air Regulatory Group on September 5, 2006. The EPA has decided to grant reconsideration of subpart KKKK to the extent specified in this proposed rule. The amendments proposed by this action address issues for which the petitioners specifically requested reconsideration (see docket entry EPA–HQ–OAR–2004–0490–0325) and other matters as described below.

As part of this action, the EPA is also proposing to amend other rule language to correct technical omissions, typographical errors, grammatical errors and to address various other issues that have been identified since promulgation. A significant issue identified since promulgation is the development of new stationary combustion technologies that are capable of burning a variety of low-British thermal units (Btu) gases. The amendments proposed in this action include amending the sulfur dioxide (SO_2) standard for all low-Btu gases similar to the biogas (i.e., landfill gas) standard currently in subpart KKKK. The proposed amendments would not change the EPA's original projections for this proposed rule's compliance costs, environmental benefits, burden on industry or the number of affected facilities. The EPA is also proposing limited conforming amendments to subpart GG.

Finally, the EPA is proposing to amend subpart KKKK to exempt some stationary combustion turbines from the emission standards in subpart KKKK. First, owners/operators of stationary combustion turbines that meet the applicability criteria of, and that are complying with the SO_2 standard in, either subpart J or Ja (standards of performance for petroleum refineries) would be exempt from complying with the otherwise applicable SO_2 standard in subpart KKKK. In addition, owners/operators of stationary combustion turbines covered that meet the applicability criteria of, and that are complying with the SO_2 and NO_X standards in subparts Ea, Eb, Cd, AAAA or BBBB (the municipal solid waste regulations) would be exempt from complying with the otherwise applicable SO_2 and NO_X standards in subpart KKKK.

II. Proposed Amendments

We are proposing to amend subparts GG and KKKK of 40 CFR part 60 to clarify the intent in applying and implementing specific rule requirements, to correct unintentional technical omissions and editorial errors, and address various other issues that have been identified since the promulgation of subpart KKKK. A summary of the proposed substantive amendments to the NSPS for stationary combustion turbines and the rationale for these amendments are below.

In addition, we are proposing to amend 40 CFR 60.17 (incorporations by reference) and republish subpart KKKK in its entirety. The proposed amendments include updating 40 CFR 60.17 to include additional test methods identified in subpart KKKK and revising the wording and writing style to clarify the requirements of the NSPS. We do not intend for these editorial revisions to substantively change any of the technical or administrative requirements of the subpart and have concluded that they do not do so. To the extent that we determine that the editorial revisions do effect any unintended substantive changes, we will correct the problem in taking final action on the proposed rule.

A. Applicability

We are proposing to make five amendments to the applicability of subpart KKKK of 40 CFR part 60. First,

the combustion turbine engine (the air compressor, combustor and turbine sections) is the primary source of emissions from a stationary combustion turbine. However, due to the broad definition of the affected facility in subpart KKKK, the combustion turbine engine does not necessarily constitute the majority of the costs of a new stationary combustion turbine. The expanded definition of a stationary combustion turbine in subpart KKKK is intended to simplify compliance and recognize the environmental benefit of heat recovery at combined cycle and combined heat and power (CHP) facilities. It is not intended to change the circumstances in which a turbine engine is designated as new or reconstructed. However, under subpart KKKK it is not clear whether a CHP or combined cycle facility that replaces the turbine engine would be considered ''new'' or ''reconstructed.'' The existing language in subpart KKKK could be interpreted to mean that replacement of a turbine engine with a new turbine engine at an existing combined cycle or CHP facility not currently subject to subpart KKKK would result in the new turbine engine being subject to subpart GG. In that case, the heat recovery steam generator (HRSG) would continue to comply with the same boiler NSPS as prior to the turbine engine replacement and two NSPS would apply to the facility. It was clearly not the intent when subpart KKKK was promulgated that these turbine engines would only be subject to emission control technologies that were available in the 1970s. In this situation, combustion controls have the same cost effectiveness as other new or reconstructed turbine engines. In addition, compliance is minimally impacted by the design of the HRSG, so there is no reason that two pieces of equipment should not be combined. Since the subpart KKKK standards are input-based, with optional alternative output-based standards, the efficiency of the HRSG is not essential for demonstrating compliance. Further, the presence of duct burners should not significantly impact the emissions rate since typical low NO_X natural gas-fired duct burners contribute between 15 to 25 parts per million (ppm) NO_X corrected to 15 percent oxygen (O_2) and ultra low NO_X duct burners are available that only contribute approximately 3 ppm NO_X corrected to 15 percent O_2. Therefore, while we are maintaining the broad definition of an affected facility, we are proposing that for the purposes of determining applicability and if a stationary combustion turbine is ''new'' or ''reconstructed,'' only the combustion turbine engine itself will be considered. This approach reflects the environmental benefits of heat recovery and output-based standards and was the intent of the original rule. This rule as amended would make it clear that the replacement of a turbine engine at a CHP or combined cycle facility that is not currently subject to subpart KKKK with a new turbine engine would result in the establishment of a new stationary combustion turbine under subpart KKKK, as was intended when subpart KKKK was promulgated. Furthermore, the addition of a new turbine engine to an existing HRSG would result in the establishment of a new stationary combustion turbine under subpart KKKK that includes the existing heat recovery steam generating unit. However, the construction or reconstruction of a HRSG associated with a turbine engine covered by subpart GG would not result in the entire facility being subject to subpart KKKK. A positive aspect of this approach is that the most current subpart KKKK requirements would apply to turbine engines that are replaced at combined cycle and CHP facilities already subject to subpart KKKK.

In the event the final rule does not include this clarification, the stationary combustion engine replaced at an existing combined cycle or CHP facility would be covered by subpart GG, and the HRSG would be covered by the applicable steam generating unit NSPS. Subpart GG would be amended to include NO_X emission standards for turbine engines that are identical to those in Table 1 of subpart KKKK. The subpart GG SO_2 emission standards and the monitoring, testing and reporting requirements would also be amended to be identical to the requirements for simple cycle turbines subject to subpart KKKK. With this approach, subpart GG would have to be amended each time that the subpart KKKK standards are amended. To provide additional compliance flexibility, we would add the ability for owners/operators of new and reconstructed turbine engine replacements at existing combined cycle and CHP facilities to petition the Administrator to voluntarily comply with the new and reconstructed requirements, as applicable, in subpart KKKK as an alternative to demonstrating compliance with amended subpart GG and applicable boiler NSPS separately. This approach would provide an equivalent amount of environmental protection as the previously described approach. However, we have concluded that the previously described approach avoids petition requirement and would reduce the regulatory burden of the proposed rule. We specifically request comment on the level of environmental protection and regulatory burden for each approach. A disadvantage of this approach is that the most current subpart KKKK requirements would not apply to turbine engines that are replaced at combined cycle and CHP facilities already subject to subpart KKKK. We are requesting comment if this approach could be amended to assure that future amended subpart KKKK requirements would apply to new and reconstructed turbine engines.

Second, we are proposing to exempt owners/operators of stationary combustion turbines that meet the applicability requirements and that are complying with the SO_2 standard in either subparts J or Ja of 40 CFR part 60 (Standards of performance for petroleum refineries) from complying with the otherwise applicable SO_2 standard in subpart KKKK. The SO_2 standard in both subparts J and Ja is more stringent than in subpart KKKK, so this proposed amendment would simplify compliance for owner/operators of petroleum refineries without an increase in pollutant emissions. In addition, owners/operators of stationary combustion turbines covered that meet the applicability criteria of, and that are complying with, the SO_2 and NO_X standards in subparts Ea, Eb, Cd, AAAA or BBBB (the municipal solid waste regulations) would be exempt from complying with the otherwise applicable SO_2 and NO_X standards in subpart KKKK. The SO_2 standards in the municipal solid waste rules are more stringent than in subpart KKKK, so this proposed amendment would simplify compliance for owner/operators of petroleum refineries without an increase in pollutant emissions.

Third, we are proposing to exempt owners/operators of stationary combustion turbines that are subject to a federally enforceable permit limiting fuel to gaseous fuels containing no more than 20 grains of sulfur per 100 standard cubic feet (scf) and/or liquid fuels containing no more than 0.050 weight percent sulfur (500 ppm sulfur by weight) from the SO_2 standard. Both of these fuels have potential SO_2 emissions of less than 0.060 pounds per million British thermal units (lb/MMBtu) and would be in compliance with the SO_2 standard. The proposed amendment would reduce the burden for owners/operators burning natural gas and

distillate oil of complying with subpart KKKK by limiting reporting and recordkeeping costs without increasing emissions.

Fourth, we are proposing to allow owners/operators of stationary combustion turbines currently covered by subpart GG and any associated steam generating unit subject to an NSPS to have the option to petition the Administrator to comply with subpart KKKK in lieu of complying with subpart GG and any associated steam generating unit NSPS. Since the applicability of subpart KKKK encompasses any associated heat recovery equipment, owners/operators would have the flexibility to comply with one NSPS instead of multiple NSPS. The Administrator will only grant the petition if he/she determines that compliance with subpart KKKK would be equivalent to, or more stringent than, compliance with subpart GG and any associated steam generating unit NSPS. For example, assuming equal amounts of fuel are combusted in the turbine and duct burners (HRSG), an existing oil-fired combined cycle combustion turbine subject separately to subpart GG and subpart Db of 40 CFR part 60 would have an equivalent combined NO_X emissions standard of approximately 65 parts per million (ppm). By contrast, the subpart KKKK NO_X standard for modified turbines burning fuels other than natural gas is 96 ppm. The Administrator would, therefore, deny the petition in such circumstances. We have concluded that this is only an issue for turbines burning fuels other than natural gas. Also, we are clarifying that if any solid fuel as defined in subpart KKKK is burned in the HRSG, the HRSG would be covered by the applicable steam generating unit NSPS and not subpart KKKK. We are not aware of any existing stationary combustion turbines that burn solid fuel in the HRSG, but the intent of this proposed rule is to cover only liquid and gaseous fuels. The amendment would prevent a large solid fuel-fired boiler from using the exhaust from a combustion turbine engine in order to avoid the requirements of the applicable steam generating unit NSPS.

Finally, we are requesting comment on how to address combustion turbine engines that are overhauled or refurbished off site in such a manner that neither the owner, operator nor manufacturer can identify which components have been replaced and, therefore, cannot conduct the otherwise required reconstruction analysis. The owner/operator of a turbine engine that is overhauled or refurbished in such a manner that each individual component of the engine is tracked would still perform the traditional reconstruction analysis, i.e., the owner/operator would compare the total cost of replacement components with the cost of a comparable new turbine engine. In general, a reconstructed facility is one which has had components replaced to the extent that the fixed capital costs of the new components exceeds 50 percent of the fixed capital cost that would be required to construct a comparable entirely new facility. (See 40 CFR 60.15.)

We are requesting comment on two potential approaches for dealing with circumstances where there is insufficient information to determine which components of a particular combustion turbine engine have been replaced. The first approach would base the reconstruction test on changes to the combustor alone. (That is, the test would be whether the fixed capital cost of the replacement combustor exceeds 50 percent of the fixed capital cost that would be required to install a comparable new combustor.) The alternate approach would be based on the number of times a particular turbine engine has been refurbished. Potential language for both approaches is as follows:

1. An overhauled or refurbished turbine engine where neither the owner/operator nor manufacturer can identify which components have been replaced shall be considered reconstructed if the combustor itself is either replaced or reconstructed (as specified under § 60.15). When such information is known, an owner or operator of a turbine engine that is overhauled or refurbished shall perform a reconstruction analysis on the entire turbine engine as described under § 60.15.

The corresponding definition for a combustor would be:

A combustor means a component or area in a combustion turbine engine where fuel is added to the pressurized air molecules and combustion takes place. It is also known as a burner or flame can.

2. An overhauled or refurbished turbine engine where neither the owner/operator nor manufacturer can identify which components have been replaced during the most recent and previous two refurbishments shall be considered reconstructed. When such information is known, an owner or operator of a turbine engine that is overhauled or refurbished shall perform a reconstruction analysis on the turbine engine as described under § 60.15.

If this provision is adopted, it would provide an owner/operator with relative certainty that they could potentially operate a combustion turbine for approximately 90,000 hours, or over 10 years of continuous operation, before triggering the reconstruction provisions in subpart KKKK. (Assuming that turbine exchanges take place at approximately 30,000 operating hour intervals.) This approach would provide relative regulatory certainty for both the owner/operator of the combustion turbine and the turbine manufacturer.

We are also requesting comment on the frequency of an entire combustor replacement. It is our understanding that combustion liners and the fuel injection system are replaced at intervals similar to major overhauls, but that the combustor need not be replaced in entirety. If this is the case, then the ''combustor'' approach could inadvertently hinder emissions improvements by providing an incentive to replace only the critical components of the combustor instead of upgrading the entire combustor. A potential alternative approach would be to limit the applicability of the combustor to the combustion liner and fuel injection system such that once those components are replaced the combustion turbine would be considered reconstructed. Assuming the replacement intervals are similar to overhaul intervals, if we adopt this approach in the final rule, we would consider two replacements prior to triggering reconstruction.

Finally, we are requesting comment on whether a similar approach should be adopted for turbines that are overhauled onsite. It is our understanding that larger combustion turbines operating on natural gas have overhaul schedules of approximately every 50,000 operating hours. Under these assumptions, a combustion turbine could potentially operate continuously for over 17 years prior to triggering the amended reconstruction provision under subpart KKKK.

If we adopt reconstruction triggers that differ from the general provisions, we intend to maintain the qualification that it is technologically and economically feasible to meet the applicable standards for each combustion turbine that triggers the amended reconstruction provisions. Instances where it might not be economically feasible would be made on a case-by-case basis by the Administrator. Examples of situations where it might not be economically feasible to meet the emissions standard include low NO_X combustor designs being unavailable, turbine designs that are not compatible with water or steam injection, or demineralized water or steam required for NO_X control being unavailable.

In addition to the above proposed amendments to the applicability of Subpart KKKK to new, reconstructed, and modified stationary combustion

turbines, we are proposing to exempt non-major sources subject to this NSPS from title V permitting requirements. Under the Clean Air Act (CAA) section 502(a), the EPA may exempt non-major sources subject to CAA section 111 (NSPS) standards from the requirements of title V if the EPA finds that compliance with such requirements is ''impracticable, infeasible, or unnecessarily burdensome'' on such sources. The EPA's finding to support exemption of non-major source stationary combustion turbines subject to Subparts GG and KKKK from the title V permitting requirements is available in the docket.

B. NO_X Emissions Standard

We are proposing to amend the NO_X emissions standard for stationary combustion turbines that burn multiple fuels. The existing rule bases the applicable NO_X standard on the total heat input to the stationary combustion turbine, including any associated duct burners, and the more stringent standard is only applicable if the total heat input is derived from at least 50 percent natural gas. However, fuel choice impacts combustion turbine engine NO_X emissions to a greater degree than it impacts such emissions from a duct burner. Therefore, we are proposing that the NO_X standard be based on the type of fuel being burned in the combustion turbine engine alone. The natural gas standard would apply at those times when the fuel input to the combustion turbine engine meets the definition of natural gas, regardless of the fuel, if any, that is burned in the duct burners.

We are also proposing to add a provision allowing for a site-specific NO_X standard for an owner/operator of a stationary combustion turbine that burns by-product fuels. The owner/operator would be required to petition the Administrator for a site-specific standard using a procedure similar to what is currently required by subpart Db of 40 CFR part 60 (the industrial boiler NSPS). We have concluded that this is appropriate since subpart KKKK now covers the HRSG that was previously covered by subpart Db.

Since startup and shutdowns are part of the regular operating practices of stationary combustion turbines, we are proposing that the NO_X emissions standard includes startup and shutdown emissions. Since periods of startup and shutdown are by definition periods of low load, the ''part-load standard'' would apply to all hours that contain a startup or shutdown event. Since the ''part-load standard'' is based on the emissions rate of a diffusion flame and not dry low NO_X (DLN) combustion controls, we have concluded this standard is appropriate. Through analysis of continuous emission monitoring system (CEMS) data, we have determined that including periods of startup and shutdown in the standard would not result in non-compliance with the standard. We analyzed NO_X continuous CEMS data from existing large and small turbines without post-combustion controls to reduce NO_X emissions. Even though many of these turbines were built prior to the applicability date of subpart KKKK, the theoretical compliance rate with a 4-hour rolling average including all periods of operation was greater than 99 percent for both large and small turbines. We were unable to determine if any of the potential excess emissions were a result of either malfunction of the NO_X CEMS or combustion control equipment, or identify all periods when the ''part-load standard'' would apply and the actual level of theoretical compliance would be higher. Even though the theoretical compliance rate is high when the NO_X emissions standard is determined directly, we are specifically requesting comment on whether to account for startup conditions by considering the first 30 minutes of operation ''part-load'' such that the part-load emissions rate would apply during that time period regardless of the actual load. Implementing this option increases the theoretical compliance rate.

Since we only used performance test data and did not analyze NO_X CEMS data in the original rulemaking, we are requesting comment on whether it is appropriate to extend the averaging time for simple cycle turbines to an operating day average. Emissions averages would only be determined for operating days with 3 or more hours of CEMS data that are not out-of-control. Data from operating days with less than 3 hours of CEMS data that are not out-of-control would be rolled over to the next operating day until 3 or more hours of data are available. Extending the averaging period to an operating daily average would increase the theoretical compliance rate. However, since combustion turbines using combustion controls tend to have a steady emissions profile, we have concluded that this approach would not result in an increase in emissions, and could lower compliance burden by reducing the reporting burden. An additional benefit of this approach is that all non out-of-control emissions data would be used in determining excess emissions. Under the current approach, any 4 operating hours with more than 1 hour of monitor downtime is reported as monitor downtime and the emissions from the remaining hours are excluded. We are not proposing a longer averaging period for a simple cycle turbine. If we were to use a longer averaging period for simple cycle turbines or determine compliance during startup, shutdown and part-load periods separately from full-load periods, the NO_X standards would be re-evaluated to determine appropriate standards. Furthermore, we are proposing to add a lb/MMBtu NO_X option that is equivalent to the ppm standard. This option would simplify compliance for some sources while providing the same level of environmental protection. Fourth, based on analysis of the CEMS data, we are proposing to change the classification of large/small for turbines operating at part-load. The existing rule divides large/small turbines operating at part-load based on the rated output of the turbine (i.e., turbines with outputs greater than 30 megawatts (MW) are considered large). This proposed amendment would divide large/small turbines operating at part-load based on the rated heat input (i.e., turbines with base load heat inputs greater 340 MMBtu per hour (MMBtu/h) would be considered large). A heat input rating of 340 MMBtu/h is approximately equivalent to an output rating of 30 MW, and this amendment would simplify compliance by making the measurement method for determination the large/small part-load subcategory consistent with how the other subcategories are determined. A detailed discussion of the NO_X CEMS data for both large and small turbines is available in the docket.

We have concluded that the net power supplied to the end user is a better indication of environmental performance than gross output from the power producer. Therefore, we intend to amend the optional output-based standard from gross to net output in the final rule. Net output is the combination of the gross electrical (or mechanical) output of the turbine engine and any output generated by the HRSG minus the parasitic power requirements. A parasitic load for a stationary combustion turbine is any of the loads or devices powered by electricity, steam, hot water or directly by the gross output of the stationary combustion turbine that does not contribute electrical, mechanical or thermal output. One reason for this amendment is that while combustion turbine engines that require high fuel gas feed pressures typically have higher gross

efficiencies, they also often require fuel compressors that have potentially larger parasitic loads than combustion turbine engines that require lower fuel gas pressures. We have concluded that primary parasitic loads include the fuel compressor, pump, or heater, fans, inlet air cooling systems, control systems and post combustion controls. We are requesting comment on any additional loads that should be considered. To account for the parasitic loads, we intend to lower the efficiency assumptions used to generate the output-based standards. We have concluded that a 2.5 percent difference in efficiency is appropriate, but are requesting comment on the issue. As an alternative to continuously monitoring parasitic loads, we have concluded that estimating parasitic loads is adequate and would minimize compliance costs. A calibration would be required to determine the parasitic loads at four load points (< 25 percent load, 25–50 percent load, 50–75 percent load, and >75 percent load). Once the parasitic load curve is determined, the appropriate amount would be subtracted from the gross output to determine net output. We are requesting comment on this approach and whether a four-load test is appropriate or if a curve fit of three loads greater than 25 percent load is sufficient.

In addition, we are proposing to recognize the environmental benefit of electricity generated by CHP facilities to account for the benefit of on-site generation avoiding losses from the transmissions and distribution of the electricity. Actual line losses vary from location to location, but we are proposing a benefit of five percent avoided transmission and distribution losses when determining the electric output for CHP facilities. To avoid CHP facilities only providing a trivial amount of thermal energy from qualifying for the transmission and distribution benefit, we are proposing to restrict the 5 percent benefit to CHP facilities where at least 20 percent of the annual output is useful thermal output.

Finally, we are requesting comment on limiting the use of the 30-day average. The existing rule provides a 30-day averaging period for owners/operators of combined cycle and CHP turbines regardless of if they elect to comply with the input or output-based standard. However, based on the review of CEMS data, NO_X emissions from stationary combustion turbines are relatively stable in terms of ppm or lb/MMBtu and a 30-day averaging time for combined cycle and CHP facilities is not necessary. Owner/operators of any stationary combustion turbine (including combined cycle and CHP turbines) electing to comply with either of the input-based standards (ppm or lb/MMBtu) would be required to use the 4-hour (or daily) averaging period. The existing rule does not provide owner/operators of simple cycle turbines the option to demonstrate compliance using a 30-day average. We have concluded that few owner/operators of simple cycle turbines would elect to demonstrate compliance with the output-based standard, but as technology develops this might change in the future. Therefore, since output is the only relevant characteristic that varies significantly over short periods and a longer averaging period is necessary to account for periods of lower efficiency, we are requesting comment on using the 30-day averaging period for owner/operators of any stationary combustion turbine electing to demonstrate compliance with the output-based standard. Owner/operators of all stationary combustion turbines electing to demonstrate compliance with either the ppm or lb/MMBtu standards would use a 4-hour (or daily) averaging period.

C. SO_2 Emissions Standard

We are proposing to amend the rule language to clarify the intent of the rule in that if a source elects to perform fuel analysis to demonstrate compliance with the SO_2 standard, the initial test must measure all sulfur compounds (e.g. hydrogen sulfide, dimethyl sulfide, carbonyl sulfide and thiol compounds). Alternate test procedures can be used only if the measured sulfur content is less than half of the applicable standard. In addition, we are proposing to allow fuel blending to achieve the applicable SO_2 standard. Under the proposed language, an owner/operator of an affected facility would be able to burn higher sulfur fuels as long as the average fuel fired meets the applicable SO_2 standard at all times. Finally, the primary method of controlling SO_2 emissions is through selecting fuels containing low amounts of sulfur or through fuel pretreatment operations that can operate at all times. We are proposing that the SO_2 standard apply during periods of startup and shutdown.

In recognition that ultra-low sulfur diesel is available for transportation purposes in Hawaii, the Commonwealth of Puerto Rico and the Virgin Islands, we are removing these areas from the definition of noncontinental area. The only difference for owners/operators of affected stationary combustion turbines located in noncontinental areas is the ability to burn higher sulfur fuels. We have concluded that since these areas have low sulfur diesel oil available it is not appropriate to include these locations in the noncontinental area definition. This amendment would still allow the use of higher sulfur fuels in Guam, American Samoa, the Northern Mariana Islands and offshore platforms where lower sulfur fuels are not necessarily as readily accessible.

For stationary combustion turbines combusting 50 percent or more biogas (based on total heat input) per calendar month, the existing Subpart KKKK establishes a maximum allowable SO_2 emissions standard of 65 nanograms (ng) SO_2 per joule (/J) (0.15 lb SO_2/MMBtu) heat input. This standard was set to avoid discouraging the development of energy recovery projects, which burn landfill gases to generate electricity in stationary combustion turbines (see 74 FR 11858, March 20, 2009). New stationary combustion technologies using other low-Btu gases are becoming commercially available. These technologies can burn low-Btu content gases recovered from steelmaking (e.g., blast furnace gas and coke oven gas), coal bed methane, closed landfills, etc. Similar to biogas, substantial environmental benefits can be achieved by using these low-Btu gases to generate electricity instead of flaring or direct venting to the atmosphere, as is now common practice. Therefore, we are proposing to expand the application of the existing 65 ng SO_2/J (0.15 lb SO_2/MMBtu) heat input emissions standard to include stationary combustion turbines combusting 50 percent or more (on a heat input basis) of any gaseous fuels that have heating values less than 26 megajoules per standard cubic meter (700 Btu per scf) per calendar month.

To account for the environmental benefit of productive use and simplify compliance for low-Btu gases, we have concluded that it is appropriate to base the SO_2 standard on a fuel concentration basis as an alternative to a lb/MMBtu basis. The original subpart KKKK 2005 proposal (70 FR 8314) SO_2 standard was based on the sulfur content in distillate oil and included a sulfur standard of 0.05 percent by weight (500 ppm by weight (ppmw)). However, since we are proposing to exempt liquid fuels containing less than 0.050 weight percent sulfur from the SO_2 standard, we are proposing an alternate standard of 500 ppm by volume (ppmv). In general, emission standards are applied to a gaseous mixture are by volume (ppmv), not by weight (ppmw). Basing the standard on a volume basis would simplify compliance and minimize burden to the regulated community. Therefore, we are proposing a fuel

specification standard of 650 milligrams per standard cubic meter (28 gr/100 scf) for low-Btu gases. This is approximately equivalent to a standard of 500 ppmv, and is in the units directly reported by most test methods.

D. Malfunction Affirmative Defense

The EPA has proposed standards in this proposed rule that apply at all times and is proposing to add an affirmative defense to civil penalties that are caused by malfunctions. The EPA's finding to support the malfunction affirmative defense is available in the docket.

E. Electronic Data Submittal

The EPA is proposing that owners/operators of stationary combustion turbines submit electronic copies of required performance test reports to the EPA's WebFIRE database. The EPA's finding to support this requirement is available in the docket.

F. Additional Proposed Amendments

We are also proposing several additional amendments. First, we have concluded that it is not appropriate to require an affected facility that is not currently in operation to startup to demonstrate compliance with the NSPS. Commencing operation strictly for the purposes of demonstrating compliance is an unnecessary cost and increases emissions. Therefore, we are proposing to exempt units that are out of operation at the time of the required performance test from conducting the required performance test until 45 days after the facility is brought back into operation.

Similarly, owner/operators of a combustion turbine that has operated 50 hours or less since the previous performance test was required to be conducted can request an extension of the otherwise required performance test from the appropriate EPA Regional Office until the turbine has operated over 50 hours. This provision is fuel specific and an owner/operator permitted to burn a backup fuel, but that rarely does so, can request an extension on testing on that particular fuel until it has been burned for over 50 hours.

In addition, for similar, separate affected facilities using identical control equipment, the Administrator or delegated authority may authorize a single emissions test as adequate demonstration for up to four other similar, separate affected facilities as long as: (1) The most recent performance test for each affected facility shows that performance of each affected facility is 75 percent or less of the applicable emissions standard; (2) the manufacturer's recommended maintenance procedures for each control device are followed; and (3) each affected facility conducts a performance test for each pollutant for which they are subject to a standard at least once every five years. DLN combustion controls are the primary method for compliance with the NSPS requirements and result in relatively stable emission rates. Furthermore, the DLN combustor is a fundamental part of a combustion turbine and as long as similar maintenance procedures are followed we have concluded that emission rates will likely be comparable between similar combustion turbines. Therefore, the additional compliance costs associated with testing each affected turbine would not result in significant emissions reductions.

Additionally, turbine engine performance can deteriorate with operation and age and operational parameters need to be verified periodically to assure proper operation of emission controls. Therefore, we are proposing to require facilities using the water or steam to fuel ratio as a demonstration of continuous compliance with the NO_X emissions standard to verify the appropriate ratio or parameters at a minimum of every 60 months. We have concluded this would not add significant burden since the majority of affected facilities are already required to conduct performance testing at least every five years through title V requirements or other state permitting requirements.

The existing rule does not state how multiple combustion turbine engines that are exhausted through a single HRSG would demonstrate compliance with the NO_X standard. Therefore, we are proposing procedures for demonstrating compliance when multiple combustion turbine engines are exhausted through a single HRSG and when steam from multiple combustion turbine HRSGs is used in a single steam turbine. Furthermore, the existing rule requires approval from the permitting authority for any use of the part 75 NO_X monitoring provisions in lieu of the specified part 60 procedures, but we concluded that approval is an unnecessary burden for facilities only using combustion controls. Therefore, we are proposing to allow sources using only combustion controls to use the parametric NO_X monitoring in part 75 to demonstrate continuous compliance without requiring prior approval. However, if the source is using post combustion control technology to comply with the requirements of the NSPS, then approval from the permitting authority is required prior to using the part 75 CEMS calibration procedures in place of the part 60 procedures.

Finally, for turbine engines replaced with an identical overhauled engine as part of an exchange program, we are proposing that the new turbine undergo a new performance test to verify proper operation, for owner/operators using water or steam to fuel ratio to verify the proper ratio, and for owner/operators using parametric monitoring to verify that the operating parameters are still valid.

G. Additional Request for Comments

Affected Facility. We are considering and requesting comment on amending the definition of the affected facility for systems with multiple combustion turbine engines. Specifically, we are requesting comment on treating multiple combustion turbine engines connected to a single generator, separate combustion turbines engines using a single HRSG and separate combustion turbine engines with separate HRSG that use a single steam turbine or otherwise combine the useful thermal output as single affected facilities. This approach would reduce burden to the regulated community by simplifying monitoring. We are also requesting comment on how the applicable emission standards would be determined and on how ''new'' and ''reconstruction'' would be defined. We are specifically requesting comment on basing the emission standards on either the base load rating of the largest single combustion turbine engine or the combined base load ratings of the combustion turbine engines. For an affected facility with multiple combustion turbine engines, we are requesting comment on considering the entire facility ''new'' or ''reconstructed'' if any combustion turbine engine is replaced with a new combustion turbine engine or reconstructed.

District Energy. We are considering and requesting comment on an appropriate method to recognize the environmental benefit of district energy systems. The steam or hot water distribution system of a district energy system located in urban areas, college and university campuses, hospitals, airports and military installations eliminates the need for multiple, smaller boilers at individual buildings. A central facility typically has superior emission controls and consists of a few larger boilers facilitating more efficient operation than numerous separate smaller individual boilers. However, when the hot water or steam is distributed, approximately two to three percent of the thermal energy in the water and six to nine percent of the

thermal energy in the steam is lost, reducing the net efficiency advantage. We are requesting comment on whether it is appropriate to divide the thermal output from district energy systems by a factor (i.e., 0.95 or 0.90) that would account for the net efficiency benefits of district energy systems. This approach would be similar to the proposed approach to how the electric output for CHP is considered when determining regulatory compliance. We request that comments include technical analysis of the net benefits in support of any conclusions.

Jet Fuel. We realize that jet fuel is an available fuel for combustion turbines and are requesting comment on adding jet fuel to the definition of distillate oil. In the event we include jet fuel in the definition of distillate oil, we are also requesting the appropriate test method (i.e., ASTM method) that should be used to identify jet fuel.

Low-Btu Gases. We are considering and requesting comment on amending subpart KKKK to specifically exempt from the SO_2 emission standards stationary combustion turbines combusting over 50 percent or more per calendar month low-Btu gases. Since these by-product gases are a recovered waste that would otherwise be flared or vented rather than a newly supplied fossil fuel such as natural gas or fuel oil, the combusting of the low-Btu gases in a stationary combustion turbine to generate electricity does not increase SO_2 emissions to the atmosphere. Such an exemption would encourage the environmentally beneficial use of low-Btu by-product gases, and would reduce the burden to the owners/operators of these affected facilities by eliminating the need to demonstrate compliance with an SO_2 emissions standard. When the emissions associated with the displaced electric and useful thermal output are accounted for, there is a net reduction in emissions to the atmosphere.

III. Statutory and Executive Order Reviews

A. Executive Order 12866: Regulatory Planning and Review and Executive Order 13563: Improving Regulation and Regulatory Review

This action is not a ''significant regulatory action'' under the terms of Executive Order 12866 (58 FR 51735, October 4, 1993) and is, therefore, not subject to review under the Executive Orders 12866 and 13563 (76 FR 3821, January 21, 2011).

B. Paperwork Reduction Act

This action does not impose any new information collection burden. The amended reconstruction provisions would not significantly impact owners/operators of stationary combustion turbines within the next 5 years, and the other proposed amendments result in no changes to the information collection requirements of the existing standards of performance and would have no impact on the information collection estimate of projected cost and hour burden made and approved by the Office of Management and Budget (OMB) during the development of the existing standards of performance. Therefore, the information collection requests have not been amended. However, OMB previously approved the information collection requirements contained in the existing regulations (40 CFR part 60, subpart KKKK) under the provisions of the Paperwork Reduction Act, 44 U.S.C. 3501 et seq., and has assigned OMB control number 2060–0582. The OMB control numbers for the EPA's regulations in 40 CFR are listed in 40 CFR part 9.

C. Regulatory Flexibility Act

The Regulatory Flexibility Act generally requires an agency to prepare a regulatory flexibility analysis of any rule subject to notice and comment rulemaking requirements under the Administrative Procedure Act or any other statute unless the agency certifies that the rule will not have a significant economic impact on a substantial number of small entities. Small entities include small businesses, small organizations, and small governmental jurisdictions.

For purposes of assessing the impacts of the proposed amendments on small entities, small entity is defined as: (1) A small business as defined by the Small Business Administration's regulations at 13 CFR 121.201; (2) a small governmental jurisdiction that is a government of a city, county, town, school district or special district with a population of less than 50,000; and (3) a small organization that is any not-for-profit enterprise which is independently owned and operated and is not dominant in its field.

After considering the economic impacts of this proposed rule on small entities, I certify that this action will not have a significant economic impact on a substantial number of small entities. The required emissions control technology and other requirements have not been significantly changed. In determining whether a rule has a significant economic impact on a substantial number of small entities, the impact of concern is any significant adverse economic impact on small entities, since the primary purpose of the regulatory flexibility analyses is to identify and address regulatory alternatives ''which minimize any significant economic impact of the rule on small entities.'' 5 U.S.C. 603 and 604. Thus, an agency may certify that a rule will not have a significant economic impact on a substantial number of small entities if the rule relieves regulatory burden, or otherwise has a positive economic effect on all of the small entities subject to the rule.

Although this proposed rule will not have a significant economic impact on a substantial number of small entities, the EPA nonetheless has tried to reduce the impact of this rule on small entities. The proposed amendments would allow flexibility in the timing of performance testing of idle turbines and fuel blending to achieve the SO_2 standards.

We therefore concluded that today's proposed rule would relieve regulatory burden for all affected small entities.

We continue to be interested in the potential impacts of the proposed rule on small entities and welcome comments on issues related to such impacts.

D. Unfunded Mandates Reform Act (UMRA)

This proposed rule does not contain a federal mandate that may result in expenditures of $100 million or more for state, local and tribal governments, in the aggregate, or the private sector in any 1 year. Since the best system of emissions reduction is unchanged and there are only minor proposed amendments to the performance testing, recordkeeping, monitoring and reporting requirements, the proposed amendments would not significantly impact the regulatory burden of this rule. Thus, this proposed rule is not subject to the requirements of sections 202 and 205 of UMRA.

This proposed rule is also not subject to the requirements of section 203 of UMRA because it contains no regulatory requirements that might significantly or uniquely affect small governments. The proposed amendments would reduce the overall regulatory requirements of the rule.

E. Executive Order 13132: Federalism

This action does not have federalism implications. It will not have substantial direct effects on the states, on the relationship between the national government and the states, or on the distribution of power and responsibilities among the various

levels of government, as specified in Executive Order 13132. This proposed rule will not impose substantial direct compliance costs on state or local governments; it will not preempt state law. Thus, Executive Order 13132 does not apply to this action.

In the spirit of Executive Order 13132, and consistent with the EPA policy to promote communications between the EPA and state and local governments, the EPA specifically solicits comment on this proposed rule from State and local officials.

F. Executive Order 13175: Consultation and Coordination With Indian Tribal Governments

This action does not have tribal implications, as specified in Executive Order 13175 (65 FR 67249, November 9, 2000). The EPA is not aware of any stationary combustion turbine owned by an Indian tribe. Thus, Executive Order 13175 does not apply to this action.

The EPA specifically solicits additional comment on this proposed action from tribal officials.

G. Executive Order 13045: Protection of Children From Environmental Health and Safety Risks

The EPA interprets Executive Order 13045 (62 FR 19885, April 23, 1997) as applying to those regulatory actions that concern health or safety risks, such that the analysis required under section 5–501 of the Executive Order has the potential to influence the regulation. This action is not subject to Executive Order 13045 because it is based solely on technology performance. The proposal is not expected to produce notable changes in criteria pollutant emissions or other pollutants but does encourage the current trend towards cleaner generation, helping to protect air quality and children's health. The agency recognizes that children are among the groups most vulnerable to climate change impacts and the public is invited to submit comments or identify peer reviewed studies relevant to this proposal based solely on technology.

H. Executive Order 13211: Actions Concerning Regulations That Significantly Affect Energy Supply, Distribution, or Use

This action is not subject to Executive Order 13211, (66 FR 28355, May 22, 2001) because it is not a significant regulatory action under Executive Order 12866.

I. National Technology Transfer and Advancement Act

Section 12(d) of the National Technology Transfer and Advancement Act (NTTAA) of 1995, Public Law 104–113, 12(d) (15 U.S.C. 272 note) directs the EPA to use voluntary consensus standards (VCS) in its regulatory activities, unless to do so would be inconsistent with applicable law or otherwise impractical. VCS are technical standards (*e.g.,* materials specifications, test methods, sampling procedures and business practices) that are developed or adopted by VCS bodies. NTTAA directs the EPA to provide Congress, through OMB, explanations when the agency decides not use available and applicable VCS.

This proposed rulemaking does not involve any new technical standards. Therefore, the EPA did not consider the use of any VCS.

J. Executive Order 12898: Federal Actions To Address Environmental Justice in Minority Populations and Low-Income Populations.

Executive Order 12898 (59 FR 7629, February 16, 1994) establishes federal executive policy on environmental justice. Its main provision directs federal agencies, to the greatest extent practical and permitted by law, to make environmental justice part of their mission by identifying and addressing, as appropriate, disproportionately high and adverse human health or environmental effects of their programs, policies and activities on minority populations and low-income populations in the United States.

The EPA has determined that this proposed rule would not have disproportionately high and adverse human health or environmental effects on minority, low-income or indigenous populations because it increases the level of environmental protection for all affected populations without having any disproportionately high adverse human health or environmental effects on any populations, including any minority, low-income or indigenous populations. This proposed rule would assure that all new stationary combustion turbines install appropriate controls to minimize health impacts to nearby populations.

To gain a better understanding of the source category and near source populations, the EPA conducted a demographic analysis on recent installations of combustion turbines selling >25 MW of power to identify any overrepresentation of minority, low income, or indigenous populations. This analysis only gives some indication of the prevalence of sub-populations that may be exposed to air pollution from the sources; it does not identify the demographic characteristics of the most highly affected individuals or communities, nor does it quantify the level of risk faced by those individuals or communities. The demographic analysis results and the details concerning their development are presented in the April 20, 2012, memorandum titled, *Environmental Justice Review,* a copy of which is available in the docket.

List of Subjects in 40 CFR Part 60

Environmental protection, Administrative practice and procedure, Air pollution control, Incorporation by reference, Intergovernmental relations, Nitrogen oxides, Reporting and recordkeeping requirements, Sulfur oxides.

Dated: June 22, 2012.

Lisa P. Jackson,

Administrator.

For the reasons stated in the preamble, title 40, chapter I, part 60, of the Code of the Federal Regulations is proposed to be amended as follows:

PART 60—[AMENDED]

1. The authority citation for part 60 continues to read as follows:

Authority: 42 U.S.C. 7401, *et seq.*

Subpart A—[AMENDED]

2. Section 60.17 is amended:
a. By revising paragraph (a)(9);
b. By revising paragraph (a)(16);
c. By revising paragraph (a)(18);
d. By revising paragraph (a)(22);
e. By revising paragraph (a)(25);
f. By revising paragraph (a)(40);
g. By revising paragraph (a)(50);
h. By revising paragraph (a)(57);
i. By revising paragraph (a)(59);
j. By revising paragraph (a)(61);
k. By revising paragraph (a)(64);
l. By revising paragraph (a)(68);
m. By revising paragraph (a)(71);
n. By revising paragraph (a)(72);
o. By revising paragraph (a)(75);
p. By revising paragraph (a)(76);
q. By revising paragraph (a)(81);
r. By revising paragraph (a)(88);
s. By revising paragraph (a)(106);
t. By revising paragraph (a)(107);
u. By revising paragraph (a)(108); and
v. By adding paragraphs (a)(109) through (a)(117).
w. By revising paragraph (h)(4);
x. By reserving paragraph (i);
y. By redesignating paragraph (m)(1) as paragraph (m)(4);
z. By revising paragraph (m)(2);
aa. By adding new paragraphs (m)(1) and (m)(3); and

bb. By revising newly redesignated paragraph (m)(4).

The revisions and additions read as follows.

§ 60.17 Incorporations by Reference.

* * * * *

(a) * * *

(9) ASTM D129–11, Standard Test Method for Sulfur in Petroleum Products (General High Pressure Decomposition Device Method), IBR approved for § 60.4360(c).

* * * * *

(16) ASTM D975–11, 11b, Standard Specification for Diesel Fuel Oils, IBR approved for §§ 60.41b of subpart Db of this part, 60.41c of subpart Dc of this part, and 60.4420 of subpart KKKK of this part.

* * * * *

(18) ASTM D1072–06, 06, Standard Test Method for Total Sulfur in Fuel Gases, IBR approved for § 60.4360(c).

* * * * *

(22) ASTM D1266–07, Standard Test Method for Sulfur in Petroleum Products (Lamp Method), IBR approved for § 60.4360(c).

* * * * *

(25) ASTM D1552–08, Standard Test Method for Sulfur in Petroleum Products (High-Temperature Method), IBR approved for § 60.4360(c).

* * * * *

(40) ASTM D2622–10, Standard Test Method for Sulfur in Petroleum Products by Wavelength Dispersive X-Ray Fluorescence Spectrometry, IBR approved for § 60.4360(c).

* * * * *

(50) ASTM D3246–11, Standard Test Method for Sulfur in Petroleum Gas by Oxidative Microcoulometry, IBR approved for § 60.4360(c).

* * * * *

(57) ASTM D4057–06 (Reapproved 2011), Standard Practice for Manual Sampling of Petroleum and Petroleum Products, IBR approved for § 60.4360(b).

* * * * *

(59) ASTM D4084–07, Standard Test Method for Analysis of Hydrogen Sulfide in Gaseous Fuels (Lead Acetate Reaction Rate Method), IBR approved for § 60.4360(c).

* * * * *

(61) ASTM D4177–95 (Reapproved 2010), Standard Practice for Automatic Sampling of Petroleum and Petroleum Products, IBR approved for § 60.4360(b).

* * * * *

(64) ASTM D4294–10, Standard Test Method for Sulfur in Petroleum and Petroleum Products by Energy-Dispersive X-Ray Fluorescence Spectrometry, IBR approved for § 60.4360(c).

* * * * *

(68) ASTM D4468–85 (Reapproved 2011), Standard Test Method for Total Sulfur in Gaseous Fuels by Hydrogenolysis and Rateometric Colorimetry, IBR approved for §§ 60.335(b) and 60.4360(c).

* * * * *

(71) ASTM D4810–88 (Reapproved 1999), 06, Standard Test Method for Hydrogen Sulfide in Natural Gas Using Length of Stain Detector Tubes, IBR approved for § 60.4360(c).

(72) ASTM D5287–97 (Reapproved 2002), 08, Standard Practice for Automatic Sampling of Gaseous Fuels, IBR approved for § 60.4360(b).

* * * * *

(75) ASTM D5453–09, Standard Test Method for Determination of Total Sulfur in Light Hydrocarbons, Motor Fuels and Oils by Ultraviolet Fluorescence, IBR approved for § 60.4360(c).

* * * * *

(81) ASTM D6228–98 (Reapproved 2003), 10, Standard Test Method for Determination of Sulfur Compounds in Natural Gas and Gaseous Fuels by Gas Chromatography and Flame Photometric Detection, IBR approved for § 60.4360(c).

* * * * *

(88) ASTM D6667–10, Standard Test Method for Determination of Total Volatile Sulfur in Gaseous Hydrocarbons and Liquefied Petroleum Gases by Ultraviolet Fluorescence, IBR approved for § 60.4360(c).

* * * * *

(106) ASTM D3699–08, Standard Specification for Kerosine, including Appendix Xl, (Approved September 1, 2008), IBR approved for §§ 60.41b of subpart Db of this part, 60.41c of subpart Dc of this part, and 60.4420 of subpart KKKK of this part.

(107) ASTM D6751–11b, Standard Specification for Biodiesel Fuel Blend Stock (B100) for Middle Distillate Fuels, including Appendices Xl through X3, (Approved July 15, 2011), IBR approved for §§ 60.41b of subpart Db of this part, 60.41c of subpart Dc of this part, and 60.4420 of subpart KKKK of this part.

(108) ASTM D7467–10, Standard Specification for Diesel Fuel Oil, Biodiesel Blend (B6 to B20), including Appendices Xl through X3, (Approved August 1, 2010), IBR approved for §§ 60.41b of subpart Db of this part, 60.41c of subpart Dc of this part, and 60.4420 of subpart KKKK of this part.

(109) ASTM D240–09, Standard Test Method for Heat of Combustion of Liquid Hydrocarbon Fuels by Bomb Calorimeter, IBR approved for § 60.4360(c).

(110) ASTM D396–10, Standard Specification for Fuel Oils, IBR approved for § 60.4420 of subpart KKKK of this part.

(111) ASTM D1826–94 (Reapproved 2010), Standard Test Method for Calorific (Heating) Value of Gases in Natural Gas Range by Continuous Recording Calorimeter, IBR approved for § 60.4350(c).

(112) ASTM D3588–98 (Reapproved 2003) Standard Practice for Calculating Heat Value, Compressibility Factor, and Relative Density of Gaseous Fuels, IBR approved for § 60.4360(c).

(113) ASTM D4809–09a, Standard Test Method for Heat of Combustion of Liquid Hydrocarbon Fuels by Bomb Calorimeter (Precision Method), IBR approved for § 60.4360(c).

(114) ASTM D4891–89 (Reapproved 2006), Standard Test Method for Heating Value of Gases in Natural Gas Range by Stoichiometric Combustion, IBR approved for § 60.4360(c).

(115) ASTM D5504–08, Standard Test Method for Determination of Sulfur Compounds in Natural Gas and Gaseous Fuels by Gas Chromatography and Chemiluminescence, IBR approved for § 60.4360(c).

(116) ASTM D6522–11, Standard Test Method for Determination of Nitrogen Oxides, Carbon Monoxide, and Oxygen Concentrations in Emissions from Natural Gas-Fired Reciprocating Engines, Combustion Turbines, Boilers, and Process Heaters Using Portable Analyzers, IBR approved for § 60.4400(a).

(117) ASTM D7164–05, 10, Standard Practice for On-line/At-line Heating Value Determination of Gaseous Fuels by Gas Chromatography, IBR approved for § 60.4360(c).

* * * * *

(h) * * *

(4) ANSI/ASME PTC 19.10–1981, Flue and Exhaust Gas Analyses [Part 10, Instruments and Apparatus], (Issued August 31, 1981), IBR approved for § 60.56c(b), § 60.63(f), § 60.106(e), § 60.104a(d), (h), (i), and (j), § 60.105a(d), (f), and (g), § 60.106a(a), § 60.107a(a), (c), and (d), tables 1 and 3 of subpart EEEE, tables 2 and 4 of subpart FFFF, table 2 of subpart JJJJ, § 60.4415(b), § 60.2145 and (t), § 60.2710(s), (t) and (w), 60.2730(q), 60.4900(b), 60.5220(b), tables 1 and 2 to subpart LLLL, and tables 2 and 3 to subpart MMMM.

* * * * *

(i) [Reserved]

* * * * *

(m) * * *

(1) Gas Processors Association Method 2166–05, Obtaining Natural Gas Samples for Analysis by Gas Chromatography, IBR approved for § 60.4360(b).

(2) Gas Processors Association Method 2172–09, Calculation of Gross Heating Value, Relative Density, Compressibility, and Theoretical Hydrocarbon Liquid Content for Natural Gas Mixtures for Custody Transfer, IBR approved for § 60.4360(c).

(3) Gas Processors Association Method 2174–93, Obtaining Liquid Hydrocarbon Samples for Analysis by Gas Chromatography, IBR approved for § 60.4360(b).

(4) Gas Processors Association Standard 2377–86, Test for Hydrogen Sulfide and Carbon Dioxide in Natural Gas Using Length of Stain Tubes, IBR approved for §§ 60.105(b), 60.107a(b), 60.334(h), and 60.4360(c).

* * * * *

Subpart GG—[Amended]

3. Section 60.330 is amended by revising paragraph (a) and adding paragraph (c) to read as follows:

§ 60.330 Applicability and designation of affected facility.

(a) The provisions of this subpart are applicable to the following affected facilities: All stationary gas turbines not covered by subparts Da or KKKK of this part with a heat input at peak load equal to or greater than 10.7 gigajoules (10 million Btu) per hour, based on the lower heating value of the fuel fired.

* * * * *

(c) As an alternative to meeting the requirements of this subpart, an owner or operator can petition the Administrator (in writing) to comply with the requirements for modified units in subpart KKKK of this part. If the Administrator grants the petition, the source will from then on (unless the unit is modified or reconstructed in the future) have to comply with the requirements for modified units in subpart KKKK of this part.

(d) If you are an owner or operator of a non-major source subject to this subpart, you are exempt from the obligation to obtain a permit under 40 CFR part 70 or 40 CFR part 71, provided you are not required to obtain a permit under 40 CFR 70.3(a) or 40 CFR 71.3(a) for a reason other than your status as a non-major source under this subpart. Notwithstanding the previous sentence, you must continue to comply with the provisions of this subpart, as applicable.

Subpart KKKK—Standards of Performance for Stationary Combustion Turbines

4. Part 60 is amended by revising subpart KKKK to read as follows:

Introduction

60.4300 What is the purpose of this subpart?

Applicability

60.4305 Does this subpart apply to my stationary combustion turbine?
60.4310 What stationary combustion turbines are not subject to this subpart?

Emission Standards

60.4315 What pollutants are regulated by this subpart?
60.4320 What NO_X emissions standard must I meet?
60.4330 What SO_2 emissions standard must I meet?

General Compliance Requirements

60.4333 What are my general requirements for complying with this subpart?
60.4334 Affirmative Defense for Violation of Emission Standards During Malfunction.

Monitoring

60.4335 How do I demonstrate compliance with my NO_X emissions standard without using a NO_X CEMS if I use water or steam injection?
60.4340 How do I demonstrate compliance with my NO_X emissions standard without using a NO_X CEMS if I do not use water or steam injection?
60.4342 How do I monitor NO_X control operating parameters?
60.4345 How do I demonstrate compliance with my NO_X emissions standard using a NO_X CEMS?
60.4350 How do I use the NO_X CEMS data to determine excess emissions?
60.4360 How do I use fuel sulfur analysis to determine the total sulfur content of the fuel combusted in my stationary combustion turbine?
60.4365 How frequently must I determine the fuel sulfur content?
60.4370 How do I demonstrate compliance with my SO_2 emissions standard using records of the fuel sulfur content?
60.4372 How do I demonstrate compliance with my SO_2 emissions standard and determine excess emissions using a SO_2 CEMS?

Recordkeeping and Reporting

60.4375 What reports must I submit?
60.4380 How are NO_X excess emissions and monitor downtime reported?
60.4385 How are SO_2 excess emissions and monitor downtime reported?
60.4390 What records must I maintain?
60.4395 When must I submit my reports?

Performance Tests

60.4400 How do I conduct performance tests to demonstrate compliance with my NO_X emissions standard if I do not have a NO_X CEMS?
60.4405 How do I conduct a performance test if I use a NO_X CEMS?
60.4415 How do I conduct performance tests to demonstrate compliance with my SO_2 emissions standard?

Definitions

60.4420 What definitions apply to this subpart?
Table 1 to Subpart KKKK of Part 60—Nitrogen Oxide Emission Standards for Stationary Combustion Turbines

Subpart KKKK—Standards of Performance for Stationary Combustion Turbines

Introduction

§ 60.4300 What is the purpose of this subpart?

This subpart establishes emission standards and compliance schedules for the control of emissions from stationary combustion turbines that commenced construction, modification, or reconstruction after February 18, 2005.

Applicability

§ 60.4305 Does this subpart apply to my stationary combustion turbine?

(a) You are subject to this subpart if you own or operate a stationary combustion turbine that commenced construction, modification, or reconstruction after February 18, 2005, and that has a base load rating equal to or greater than 2.9 megawatts (MW) (10 million British thermal units per hour (MMBtu/h)), except as provided for in § 60.4310. Any additional heat input from duct burners used with heat recovery steam generating units or fuel preheaters is not included in the heat input value used to determine the applicability of this subpart to a given stationary combustion turbine.

(b) For the purpose of this subpart, only the combustion turbine engine itself is used to determine whether the affected facility is new or reconstructed. Other equipment included in the definition of a stationary combustion turbine is not included when determining if a facility is new or reconstructed.

(c) A combustion turbine engine subject to this subpart is not subject to subpart GG of this part.

(d) Duct burners that do not burn any solid fuels when used with a heat recovery steam generating unit that is part of either a combined cycle combustion turbine or a combined heat and power (CHP) combustion turbine subject to this subpart are not subject to subpart D, Da, Db, or Dc of this part, as applicable.

(e) If you own or operate either a stationary combustion turbine

(including a combined cycle combustion turbine or a CHP combustion turbine) that commenced construction, modification, or reconstruction on or before February 18, 2005, you may submit a written petition to the Administrator requesting that the stationary combustion turbine be allowed to comply with the applicable requirements for modified units under this subpart as an alternative to complying with subpart GG of this part, and with subparts D, Da, Db, and Dc of this part, as applicable. If the Administrator or delegated authority approves the petitioner's request, the affected facility must comply with the requirements for modified units under this subpart unless the combustion turbine engine is reconstructed or replaced with a new facility in the future.

(f) If you are an owner or operator of a non-major source subject to this subpart, you are exempt from the obligation to obtain a permit under 40 CFR part 70 or 40 CFR part 71, provided you are not required to obtain a permit under 40 CFR 70.3(a) or 40 CFR 71.3(a) for a reason other than your status as a non-major source under this subpart. Notwithstanding the previous sentence, you must continue to comply with the provisions of this subpart, as applicable.

§ 60.4310 What stationary combustion turbines are not subject to this subpart?

(a) An integrated gasification combined cycle electric utility steam generating unit subject to subpart Da of this part is not subject to this subpart.

(b) A stationary combustion turbine used in a combustion turbine test cell/stand as defined in § 60.4420 is not subject to this subpart.

(c) A stationary combustion turbine subject to subpart Ea, subpart Eb, or subpart AAAA of this part is not subject to this subpart.

(d) A stationary combustion turbine subject to an EPA approved State or Federal plan implementing under authority of Clean Air Act sections 111(d)/129 either subpart Cb or subpart BBBB of this part is not subject to this subpart.

Emission Standards

§ 60.4315 What pollutants are regulated by this subpart?

The pollutants regulated by this subpart are nitrogen oxides (NO_X) and sulfur dioxide (SO_2).

§ 60.4320 What NO_X emissions standard must I meet?

(a) For each simple cycle stationary combustion turbine, except as provided for in paragraph (d) of this section, you must not discharge into the atmosphere from the affected facility any gases that contain NO_X in excess of the applicable emissions standard as determined on a 4-operating hour basis and according to the requirements specified in paragraph (c) of this section.

(b) For each combined-cycle combustion turbine or CHP combustion turbine except as provided for in paragraph (d) of this section, you must not discharge into the atmosphere from the affected facility any gases that contain NO_X into the atmosphere from the affected facility in excess of the applicable emissions standard on a 30-operating day basis and according to the requirements specified in paragraph (c) of this section.

(c) For the purpose of determining compliance with the applicable emissions standard in paragraphs (a) and (b) of this section, you must meet the requirements specified in paragraphs (c)(1) through (c)(4), as applicable to your affected facility.

(1) The NO_X emissions standard that is applicable to your affected facility shall be determined on an operating hour basis except as provided for in paragraph (c)(2) of this section. Determining the hourly NO_X emission standards for your affected facility requires recording hourly data and maintaining records according to the requirements in § 60.4390.

(2) As an alternative to the requirements specified in paragraph (c)(1) of this section, you may elect to use the lowest emissions standard determined using Table 1 of this subpart that is applicable to your affected facility for the entire required compliance period.

(3) During each operating hour when only natural gas is combusted in the combustion turbine engine, you must meet the applicable NO_X emissions standard determined using Table 1 of this subpart for a stationary combustion firing natural gas. During each operating hour when any fuel other than natural gas is combusted in the combustion turbine engine, you must meet the applicable NO_X emissions standard determined using Table 1 of this subpart for a stationary combustion firing fuels other than natural gas. If multiple fuels are combusted during a given operating hour, then the highest applicable NO_X emissions standard is applied for the entire operating hour.

(4) If you have two or more combustion turbine engines connected to a single electric generator, each of the combustion turbine engines must meet the applicable NO_X emissions standard determined using Table 1 of this subpart.

(d) Stationary combustion turbines specified in paragraphs (d)(1) through (3) of this section are exempt from the applicable NO_X emissions standard in paragraphs (a) and (b) of this section.

(1) An emergency combustion turbine, as defined in § 60.4420;

(2) A stationary combustion turbine used for research and development of equipment for combustion turbine emissions control techniques or efficiency improvements as determined by the Administrator or delegated authority on a case-by-case basis; and

(3) A stationary combustion turbine that combusts byproduct fuels for which a facility-specific NO_X emissions standard has been established by the Administrator according to the requirements of paragraphs (d)(3)(i) and (ii).

(i) You may request a facility-specific NO_X emissions standard by submitting a written request to the Administrator or delegated authority explaining why your affected facility when burning the byproduct fuel is unable to comply with the applicable NO_X emissions standard determined using Table 1 of this subpart.

(ii) If the Administrator approves the request, a letter will be sent to the facility describing the facility-specific NO_X emissions standard. You must use the compliance procedures detailed in the letter and make the letter available to the public. If the Administrator determines it is appropriate, the conditions and requirements of the letter can be reviewed and changed at any point.

(e) For affected facilities for which construction, modification, or reconstruction commenced before August 30, 2012, you must meet the NO_X emissions standard applicable under this section to your affected facility during all times when the affected facility is operating except during periods of startup, shutdown, or malfunction. For each affected facility for which construction, reconstruction, or modification commenced after August 29, 2012, you must meet the NO_X emissions standard applicable under this section to your affected facility during all times when the affected facility is operating (including periods of startup, shutdown, and malfunction).

§ 60.4330 What SO_2 emissions standard must I meet?

(a) For each stationary combustion turbine, except as provided for in paragraphs (b) through (g) of this section, you must not cause to be discharged into the atmosphere from the

affected facility any gases that contain SO_2 in excess of either:

(1) 110 nanograms per Joule (ng/J) (0.90 pounds per megawatt-hour (lb/MWh)) gross energy output; or

(2) 26 ng SO_2/J (0.060 lb SO_2/MMBtu) heat input.

(b) As an alternative to the requirements of paragraph (a) of this section, for each stationary combustion turbine combusting 50 percent or more low-Btu gas per calendar month based on total heat input using the higher heating value of the fuel, you may limit the sulfur content of the fuel to no more than either:

(1) 650 milligrams of sulfur per standard cubic meter (mg/scm) (28 grains (gr) of sulfur per 100 standard cubic feet (scf)); or

(2) 65 ng SO_2/J (0.15 lb SO_2/MMBtu) heat input.

(c) For each stationary combustion turbine located in a noncontinental area, you must not cause to be discharged into the atmosphere from the affected facility any gases that contains SO_2 in excess of either:

(1) 780 ng/J (6.2 lb/MWh) gross energy output; or

(2) 180 ng SO_2/J (0.42 lb SO_2/MMBtu) heat input.

(d) For each stationary combustion turbine for which the Administrator determines that the affected facility does not have access to natural gas and the removal of sulfur compounds from the fuel would cause more environmental harm than benefit, you must not cause to be discharged into the atmosphere from the affected facility any gases that contain SO_2 in excess of either:

(1) 780 ng/J (6.2 lb/MWh) gross energy output; or

(2) 180 ng SO_2/J (0.42 lb SO_2/MMBtu) heat input.

(e) A stationary combustion turbine that is subject to SO_2 emission standards under either subpart J or Ja of this part is not subject to the SO_2 emission standards in this subpart.

(f) A combustion turbine that is subject to a federally enforceable requirement limiting the sulfur content of gaseous fuels combusted in the stationary combustion turbine to no more than 460 mg/scm (20 gr/100 scf) and/or for liquid fuels no more than 0.050 weight percent sulfur is not subject to the SO_2 emission standards in this subpart.

(g) For affected facilities for which construction, modification, or reconstruction commenced before August 30, 2012, you must meet the SO_2 emissions standard applicable under this section to your affected facility during all times when the affected facility is operating except during periods of startup, shutdown, or malfunction. For each affected facility for which construction, reconstruction, or modification commenced after August 29, 2012, you must meet the SO_2 emissions standard applicable under this section to your affected facility during all times when the affected facility is operating (including periods of startup, shutdown and malfunction).

General Compliance Requirements

§ 60.4333 What are my general requirements for complying with this subpart?

(a) You must operate and maintain your stationary combustion turbine, air pollution control equipment, and monitoring equipment in a manner consistent with good air pollution control practices for minimizing emissions at all times including during startup, shutdown, and malfunction.

(b) If you own or operate a stationary combustion turbine subject to a NO_X emissions standard in § 60.4320, you must conduct an initial performance test according to § 60.8 using the applicable methods in § 60.4400 or § 60.4405. Thereafter, unless you perform continuous monitoring consistent with §§ 60.4335, 60.4340(b), or 60.4345, you must conduct subsequent performance tests according to the applicable requirements in paragraphs (b)(1) through (b)(6) of this section.

(1) Except as provided for in paragraphs (b)(2) through (b)(5) of this section, you must conduct subsequent performance tests within 12 calendar months following the date the previous performance test was required to be conducted. Performance tests must be separated by a minimum of 9 calendar months.

(2) If the NO_X emission result from the most recent performance test is less than or equal to 75 percent of the NO_X emissions standard for the stationary combustion turbine, you may reduce the frequency of subsequent performance tests to 24 calendar months following the date the previous performance test was required to be conducted. Performance tests must be separated by a minimum of 21 calendar months. If the results of any subsequent performance test exceed 75 percent of the NO_X emissions standard for the stationary combustion turbine, you must resume annual performance testing.

(3) An affected facility that has not operated for the 60 calendar days prior to the due date of a performance test is not required to perform the subsequent performance test until 45 calendar days after the next operating day. The delegated permitting authority must be notified of recommencement of operation consistent with § 60.4375(d).

(4) If you own or operate an affected facility that has operated 50 operating hours or less in total or with a particular fuel since the date the previous performance test was required to be conducted you may request an extension from the otherwise required performance test until after the affected facility has operated more than 50 operating hours in total or with a particular fuel since the date of the previous performance test was required to be conducted. A request for an extension under this paragraph must be addressed to the relevant air division or office director of the appropriate Regional Office of the U.S. EPA as identified in § 60.4(a) for his or her approval at least 30 calendar days prior to the date on which the performance test is required to be conducted. If an exemption is approved, a performance test must be conducted within 45 calendar days after the day the facility reaches 50 hours of operation since the date the previous performance test was required to be conducted. When the facility has operated more than 50 operating hours since the date the previous performance test was required to be conducted, the delegated permitting authority must be notified consistent with § 60.4375(e).

(5) For a facility at which a group consisting of no more than five similar stationary combustion turbines (i.e., same manufacturer and model number) is operated, you may request the use of a custom testing schedule by submitting a written request to the Administrator or delegated authority. The minimum requirements of the custom schedule include the conditions specified in paragraphs (5)(i) through (v) of this section.

(i) Emissions from the most recent performance test for each individual affected facility are 75 percent or less of the applicable standard;

(ii) Each stationary combustion turbine uses the same emissions control technology;

(iii) Each stationary combustion turbine is operated in a similar manner;

(iv) Each stationary combustion turbine and its emissions control equipment are maintained according to the manufacturer's recommended maintenance procedures; and

(v) A performance test is conducted on each affected facility at least once every 5 calendar years.

(6) A stationary combustion turbine subject to a NO_X emissions standard in § 60.4320 that exchanges the combustion turbine engine for an overhauled combustion turbine engine

as part of an exchange program, must conduct an initial performance test according to § 60.8 using the applicable methods in § 60.4400.

(c) Except as provided for in paragraphs (c)(1) or (2) of this section, for each stationary combustion turbine subject to a NO_X emissions standard in § 60.4320, you must demonstrate continuous compliance using a continuous emissions monitoring system (CEMS) for measuring NO_X emissions according to the provisions in § 60.4345. If your stationary combustion turbine is equipped with a NO_X CEMS, those measurements must be used to determine excess emissions.

(1) If your stationary combustion turbine uses water or steam injection but not post-combustion controls to meet the applicable NO_X emissions standard in § 60.4320, you may elect to demonstrate continuous compliance using either the pounds per million British thermal units (lb/MMBtu) or the part per million (ppm) standard according to the provisions in § 60.4335.

(2) If your stationary combustion turbine does not use water injection, steam injection, or post-combustion controls to meet the applicable NO_X emissions standard in § 60.4320, you may elect to demonstrate continuous compliance with either the lb/MMBtu or ppm standard according to the provisions in § 60.4340.

(d) An owner or operator of a stationary combustion turbine subject to an SO_2 emissions standard in § 60.4330 must demonstrate compliance using one of the methods specified in paragraphs (d)(1) through (4) of this section.

(1) Conduct an initial performance test according to § 60.8 and use the applicable methods in § 60.4415. Thereafter, you must conduct subsequent performance tests within 12 calendar months following the date the previous performance test was required to be conducted. Performance tests must be separated by a minimum of 9 calendar months. An affected facility that has not operated for the 60 calendar days prior to the due date of a performance test is not required to perform the subsequent performance test until 45 calendar days after the next operating day;

(2) Conduct an initial performance test according to § 60.8 and use the applicable methods in § 60.4415. Thereafter, conduct subsequent fuel sulfur analyses using the applicable methods specified in § 60.4360 and at the frequency specified in § 60.4365;

(3) Conduct an initial performance test according to § 60.8 and use the applicable methods in § 60.4415. Thereafter, maintain records (such as a current, valid purchase contract, tariff sheet, or transportation contract) documenting that total sulfur content for the initial and subsequent fuel combusted in your stationary combustion turbine at all times does not exceed applicable conditions specified in § 60.4370; or

(4) Conduct an initial performance test according to § 60.8 using the applicable methods in § 60.4415. Thereafter, continue to monitor SO_2 emissions using a CEMS according to the requirements specified in § 60.4372.

(e) If you elect to comply with an input-based standard (lb/MMBtu) and your affected facility includes use of one or more heat recovery steam generating units, then you must determine compliance with the applicable NO_X and SO_2 emission standards according to the procedures specified in paragraphs (e)(1) or (2) of this section as applicable to the heat recovery steam generating unit configuration used for your affected facility.

(1) For a configuration where a single combustion turbine engine is exhausted through the heat recovery steam generating unit, you must measure both the emissions at the exhaust stack for the heat recovery steam generating unit and the fuel flow to the combustion turbine engine and any associated duct burners.

(2) For a configuration where two or more combustion turbine engines are exhausted through a heat recovery steam generating unit, you must measure both the total emissions at the exhaust stack for the heat recovery steam generating unit and the total fuel flow to each combustion turbine engine and any associated duct burners. The applicable emissions standard for the affected facility is equal to the most stringent emissions standard for any individual combustion turbine engine.

(f) If you elect to comply with an output-based standard (lb/MWh) and your affected facility includes use of one or more heat recovery steam generating units, then you must determine compliance with the applicable NO_X and SO_2 emission standards according to the procedures in paragraphs (f)(1), (2), or (3) of this section as applicable to the heat recovery steam generating unit configuration used for your affected facility.

(1) For a configuration where a single combustion turbine engine is exhausted through the heat recovery steam generating unit, you must measure both the emissions at the exhaust stack for the heat recovery steam generating unit and the total electrical, mechanical energy, and useful thermal output of the stationary combustion turbine (as applicable).

(2) For a configuration where two or more combustion turbine engines are exhausted through a single heat recovery steam generating unit, you must measure both the total emissions at the exhaust stack for the heat recovery steam generating unit, and the total electrical, mechanical energy, and useful thermal output of the heat recovery steam generating unit and each combustion turbine engine (as applicable). The applicable emissions standard for the affected facility is equal to the most stringent emissions standard for any individual combustion turbine engines.

(3) For a configuration where your combustion turbine engines are exhausted through two or more heat recovery steam generating units which serve a common steam turbine or steam header, you must measure both the emissions at the exhaust stack for each heat recovery steam generating unit and the total electrical or mechanical energy output of each combustion turbine engine (as applicable). To determine the gross energy output of the steam produced by the heat recovery steam generating unit, you must develop a custom method and provide information, satisfactory to the Administrator or delegated authority, apportioning the gross energy output of the steam produced by the heat recovery steam generating units to each of the affected stationary combustion turbines.

§ 60.4334 Affirmative Defense for Violation of Emission Standards During Malfunction.

In response to an action to enforce the standards set forth in paragraphs §§ 60.4320 and 60.4330 you may assert an affirmative defense to a claim for civil penalties for violations of such standards that are caused by malfunction, as defined at 40 CFR 60.2. Appropriate penalties may be assessed; however, if you fail to meet your burden of proving all of the requirements in the affirmative defense, the affirmative defense shall not be available for claims for injunctive relief.

(a) To establish the affirmative defense in any action to enforce such a standard, you must timely meet the reporting requirements in paragraph (b) of this section, and must prove by a preponderance of evidence that:

(1) The violation:

(i) Was caused by a sudden, infrequent, and unavoidable failure of air pollution control equipment, process equipment, or a process to operate in a normal or usual manner, and

(ii) Could not have been prevented through careful planning, proper design

or better operation and maintenance practices; and

(iii) Did not stem from any activity or event that could have been foreseen and avoided, or planned for; and

(iv) Was not part of a recurring pattern indicative of inadequate design, operation, or maintenance; and

(2) Repairs were made as expeditiously as possible when a violation occurred. Off-shift and overtime labor were used, to the extent practicable to make these repairs; and

(3) The frequency, amount and duration of the violation (including any bypass) were minimized to the maximum extent practicable; and

(4) If the violation resulted from a bypass of control equipment or a process, then the bypass was unavoidable to prevent loss of life, personal injury, or severe property damage; and

(5) All possible steps were taken to minimize the impact of the violation on ambient air quality, the environment, and human health; and

(6) All emissions monitoring and control systems were kept in operation if at all possible, consistent with safety and good air pollution control practices; and

(7) All of the actions in response to the violation were documented by properly signed, contemporaneous operating logs; and

(8) At all times, the affected source was operated in a manner consistent with good practices for minimizing emissions; and

(9) A written root cause analysis has been prepared, the purpose of which is to determine, correct, and eliminate the primary causes of the malfunction and the violation resulting from the malfunction event at issue. The analysis must also specify, using best monitoring methods and engineering judgment, the amount of any emissions that were the result of the malfunction.

(b) Report. The owner or operator seeking to assert an affirmative defense shall submit a written report to the Administrator or delegated authority with all necessary supporting documentation, that it has met the requirements set forth in paragraph (a) of this section. This affirmative defense report shall be included in the first periodic compliance, deviation report or excess emission report otherwise required after the initial occurrence of the violation of the relevant standard (which may be the end of any applicable averaging period). If such compliance, deviation report or excess emission report is due less than 45 days after the initial occurrence of the violation, the affirmative defense report may be included in the second compliance, deviation report, or excess emission report due after the initial occurrence of the violation of the relevant standard.

Monitoring

§ 60.4335 How do I demonstrate compliance with my NO_X emissions standard without using a NO_X CEMS if I use water or steam injection?

If you qualify and elect to demonstrate continuous compliance according to the provisions of § 60.4333(c)(1), you must install, calibrate, maintain, and operate a continuous monitoring system to monitor and record the fuel consumption and the ratio of water or steam to fuel fired in the combustion turbine engine consistent with the requirements in § 60.4342. Water or steam only needs to be injected when a fuel is being combusted that requires water or steam injection for compliance with the applicable NO_X emissions standard.

§ 60.4340 How do I demonstrate compliance with my NO_X emissions standard without using a NO_X CEMS if I do not use water or steam injection?

(a) If you qualify and elect to demonstrate continuous compliance according to the provisions of § 60.4333(c)(2), you must demonstrate compliance with the NO_X emissions standard using the methods specified in either paragraphs (a)(1) through (3) of this section.

(1) Conduct performance tests according to requirements in § 60.4400;

(2) Monitor the NO_X emissions rate using the methodology in appendix E to part 75 of this chapter, or the low mass emissions methodology in § 75.19; or

(3) Install, calibrate, maintain and operate an operating parameter continuous monitoring system according to the requirements specified in paragraph (b) of this section and consistent with the requirements specified in § 60.4342.

(b) Continuous operating parameter monitoring must be performed using the methods specified in paragraphs (b)(1) through (4) of this section as applicable to the stationary combustion turbine.

(1) Selection of the operating parameters used to comply with this paragraph must be identified in the performance test report, and are subject to the review and approval of the delegated permitting authority.

(2) For a lean premix stationary combustion turbine, you must continuously monitor the appropriate parameters to determine whether the unit is operating in low-NO_X mode when low-NO_X operation is required to comply with the applicable emission NO_X standard.

(3) For a stationary combustion turbine other than a lean premix stationary combustion turbine, you must define parameters indicative of the unit's NO_X formation characteristics, and monitor these parameters continuously.

(4) You must perform the parametric monitoring described in section 2.3 in appendix E to part 75 of this chapter or in § 75.19(c)(1)(iv)(H).

§ 60.4342 How do I monitor NO_X control operating parameters?

(a) If you monitor steam or water to fuel ratio according to § 60.4335 or other parameters according to § 60.4340, the applicable parameters must be continuously monitored and recorded during the performance test, to establish acceptable values and ranges. You may supplement the performance test data with engineering analyses, design specifications, manufacturer's recommendations, and other relevant information to define the acceptable parametric ranges more precisely. You must develop and keep on-site a parameter monitoring plan which explains the procedures used to document proper operation of the NO_X emission controls. The plan must include the information specified in paragraphs (a)(1) through (6) of this section:

(1) Identification of the parameters to be monitored and show there is a significant relationship to emissions and proper operation of the NO_X emission controls;

(2) Selected parameter ranges (or designated conditions) indicative of proper operation of the stationary combustion turbine NO_X emission controls, or describe the process by which such range (or designated condition) will be established;

(3) Explanation of the process you will use to make certain that you obtain data that are representative of the emissions or parameters being monitored (such as detector location, installation specification if applicable);

(4) Description of quality assurance and control practices used to ensure the continuing validity of the data;

(5) Description of the frequency of monitoring and the data collection procedures which you will use (e.g., you are using a computerized data acquisition over a number of discrete data points with the average (or maximum value) being used for purposes of determining whether an exceedance has occurred); and

(6) Justification for the proposed elements of the monitoring. If a

proposed performance specification differs from manufacturer recommendation, you must explain the reasons for the differences. You must submit the data supporting the justification, but you may refer to generally available sources of information used to support the justification. You may rely on engineering assessments and other data, provided you demonstrate factors which assure compliance or explain why performance testing is unnecessary to establish indicator ranges.

(b) The ratio of water or steam to fuel and parameter continuous monitoring system ranges must be reestablished at least 60 calendar months following the previous calibration and each time the combustion turbine engine is replaced with an overhauled turbine engine as part of an exchange program. An affected facility that has not operated for 60 calendar days prior to the due date of a recalibration you are not required to perform the subsequent recalibration until 45 calendar days after the next operating day.

§ 60.4345 How do I demonstrate compliance with my NO_X emissions standard using a NO_X CEMS?

(a) Each CEMS measuring NO_X emissions used to meet the requirements of this subpart, must meet the requirements in paragraphs (a)(1) through (7) of this section.

(1) You must install, certify, maintain, and operate a NO_X monitor to determine the hourly average NO_X emissions in the units of the standard with which you are complying;

(2) If you elect to comply with the ppm emissions standard, you must also install a diluent gas (oxygen (O_2) or carbon dioxide (CO_2)) monitor;

(3) If you elect to comply with an input-based emissions standard, you must install, calibrate, maintain, and operate either a fuel flow meter (or flow meters) or an O_2 or CO_2 CEMS and a stack flow meter to continuously measure the heat input to the affected facility;

(4) If you elect to comply with an output-based emissions standard, you must also install, calibrate, maintain, and operate both a watt meter (or meters) to continuously measure the gross electrical output from the affected facility and a stack flow meter. If you have a CHP combustion turbine and elect to comply with an output-based emissions standard, you must also install, calibrate, maintain, and operate meters to continuously determine the total useful recovered thermal energy. For steam this includes flow rate, temperature, and pressure. If you have a direct mechanical dive application and elect to comply with the output-based emissions standard you must submit a plan to the Administrator or delegated authority for approval of how gross energy output will be determined.

(5) If you elect to comply with the part load NO_X emissions standard, you must install, calibrate, maintain, and operate either a fuel flow meter (or flow meters) or an O_2 or CO_2 CEMS and a stack flow meter to continuously measure the heat input to the affected facility.

(6) If you elect to comply with the temperature dependent NO_X emissions standard, you must install, calibrate, maintain, and operate a thermometer to continuously monitor the ambient temperature.

(7) If you burn natural gas with fuels other than natural gas and elect to comply with the fuels other than natural gas NO_X emissions standard, you must install, calibrate, maintain, and operate a device to continuously monitor when a fuel other than natural gas fuel is combusted in the combustion turbine engine.

(b) Each NO_X CEMS must be installed and certified according to Performance Specification 2 (PS 2) in appendix B to this part. The span value must be 125 percent of the highest applicable standard or highest anticipated hourly NO_X emissions rate. For stationary combustion turbines that do not use post-combustion technology to reduce emissions of NO_X to comply with the requirements of this subpart, the delegated permitting authority may approve the use of the NO_X and diluent CEMS that are installed and certified according to appendix A of part 75 of this chapter in lieu of Procedure 1 in appendix F to this part and the requirements of § 60.13 of this part, except that the relative accuracy test audit (RATA) of the CEMS must be performed on a lb/MMBtu basis.

(c) During each full operating hour, both the NO_X monitor and the diluent monitor must complete a minimum of one cycle of operation (sampling, analyzing, and data recording) for each 15-minute quadrant of the hour. For partial operating hours, at least one data point must be obtained with each monitor for each quadrant of the hour in which the unit operates. For operating hours in which required quality assurance and maintenance activities are performed on the CEMS, a minimum of two data points (one in each of two quadrants) are required for each monitor.

(d) Each fuel flow meter must be installed, calibrated, maintained, and operated according to the manufacturer's instructions. Alternatively fuel flow meters that meet the installation, certification, and quality assurance requirements in appendix D to part 75 of this chapter are acceptable for use under this subpart.

(e) Each watt meter, steam flow meter, and each pressure or temperature measurement device must be installed, calibrated, maintained, and operated according to manufacturer's instructions.

(f) You must develop, submit to the delegated permitting authority for approval, maintain, and adhere to an on-site quality assurance (QA) plan for all of the continuous monitoring equipment you use to comply with this subpart. At a minimum, such a QA plan must address the requirements of §§ 60.13(d), (e), and (h) of this part. For the CEMS and fuel flow meters, the owner or operator of a stationary combustion turbine that does not use post combustion technology to reduce emissions of NO_X to comply with the requirements of this subpart may, with approval of the delegated permitting authority, satisfy the requirements of this paragraph by implementing the QA program and plan described in section 1 in appendix B to part 75 of this chapter in lieu of the requirements in § 60.13(d)(1).

§ 60.4350 How do I use the NO_X CEMS data to determine excess emissions?

(a) If you demonstrate continuous compliance using a CEMS for measuring NO_X emissions, excess emissions are defined as the applicable compliance period for the stationary combustion turbine (either 4-operating hours or 30-operating days), during which the average NO_X emissions from your affected facility measured by the CEMS is greater than the applicable maximum allowable NO_X emissions standard specified in § 60.4320 as determined using the procedures specified in this section that apply to your stationary combustion turbine.

(b) The NO_X CEMS data for each operating hour as measured according to the requirements in § 60.4345 must be used to determine the hourly average NO_X emissions. The hourly average for a given operating hour is the average of all data points for the operating hour. However, for any periods during which the NO_X, diluent, flow, watt, steam pressure, or steam temperature monitors (as applicable) are out-of-control, the data points are not used in determining the hourly average NO_X emissions. All data points that are not collected during out-of-control periods must be used to determine the hourly average NO_X emissions.

(c) For each operating hour in which an hourly average is obtained, the data acquisition and handling system must calculate and record the hourly average NO_X emissions in units of ppm or lb/MMBtu, using the appropriate equation from EPA Method 19 in appendix A–7 of this part. For any hour in which the hourly average O_2 concentration exceeds 19.0 percent O_2 (or the hourly average CO_2 concentration is less than 1.0 percent CO_2), a diluent cap value of 19.0 percent O_2 or 1.0 percent CO_2 (as applicable) may be used in the emission calculations.

(d) Correction of measured NO_X concentrations to 15 percent O_2 is only allowed if you elect to comply with the ppm standard in Table 1 of this subpart.

(e) Data used to meet the requirements of this subpart shall not include substitute data values derived from the missing data procedures of part 75 of this chapter, nor shall the data be bias adjusted according to the procedures of part 75 of this chapter.

(f) All required fuel flow rate, steam flow rate, temperature, pressure, and megawatt data must be reduced to hourly averages. However, for any periods during which the flow, watt, steam pressure, or steam temperature monitors (as applicable) are out-of-control, the data points are not used in determining the appropriate hourly average value

(g) Calculate the hourly average NO_X emissions rate, in units of the emissions standard under § 60.4320, using either ppm or lb/MMBtu for units complying with the input-based standard or equation 1 of this subpart for units complying with the output-based standard:

(1) For a stationary combustion turbine complying with an output-based emissions standard use Equation 1.

$$E = \frac{(NO_x)_h \times Q}{P} \qquad \text{(Eq. 1)}$$

Where:

E = Hourly NO_X emissions rate, in lb/MWh,

$(NO_X)_h$ = Average hourly NO_X emissions rate, in lb/MMBtu,

Q = Hourly heat input to the stationary combustion turbine, in MMBtu, measured using the fuel flowmeter(s), *e.g.,* calculated using Equation D–15a in appendix D to part 75 of this chapter, an O_2 or CO_2 CEMS and a stack flow meter, or the methodologies in appendix F to part 75 of this chapter, and

P = Gross energy output of the stationary combustion turbine in MWh.

(2) The gross energy output is calculated as the sum of the total electrical and mechanical energy generated by the combustion turbine engine, the additional electrical or mechanical energy (if any) generated by the steam turbine following the heat recovery steam generating unit, and the total useful thermal energy output that is not used to generate additional electricity or mechanical output, expressed in equivalent MWh, as calculated using Equations 2 and 3 of this subpart:

$$P = \frac{(Pe)_t}{T} + \frac{(Pe)_c}{T} + P_s + P_o \qquad \text{(Eq. 2)}$$

Where:

P = Gross energy output of the stationary combustion turbine system in MWh,

$(Pe)_t$ = Electrical or mechanical energy output of the stationary combustion turbine in MWh,

$(Pe)_c$ = Electrical or mechanical energy output (if any) of the steam turbine in MWh,

P_s = Useful thermal energy of the steam, measured relative to ISO conditions, not used to generate additional electric or mechanical output, in MWh, and

P_o = Other useful heat recovery, measured relative to ISO conditions, not used for steam generation or performance enhancement of the stationary combustion turbine.

T = Electric Transmission and Distribution Factor. Equal to 0.95 for CHP combustion turbine where at least 20.0 percent of the total gross useful energy output consists of electric or direct mechanical output and 20.0 percent of the total gross useful energy output consists of useful thermal output on an annual basis. Equal to 1.0 for all other combustion turbines.

$$P_s = \frac{Q_m \times H}{3.413 \times 10^6 \; Btu/MWh} \qquad \text{(Eq. 3)}$$

Where:

P_s = Useful thermal energy of the steam, measured relative to ISO conditions, not used to generate additional electric or mechanical output, in MWh,

Q_m = Measured steam flow in lb,

H = Enthalpy of the steam at measured temperature and pressure relative to ISO conditions, in Btu/lb, and

3.413×10^6 = Conversion factor from Btu to MWh.

(3) For mechanical drive applications complying with the output-based standard, use equation 4 of this subpart:

$$E = \frac{(NO_x)_m}{BL \times AL} \qquad \text{(Eq. 4)}$$

Where:

E = NO_X emissions rate in lb/MWh, $(NO_X)_m$ = NO_X emissions rate in lb/h,

BL = Manufacturer's base load rating of turbine, in MW, and

AL = Actual load as a percentage of the base load rating.

(h) For each simple cycle stationary combustion turbines, excess NO_X emissions are determined on a 4-operating hour averaging period basis using the NO_X CEMS data and procedures specified in paragraphs (h)(1) through (4) of this section as applicable to the NO_X emissions standard in Table 1 to this subpart.

(1) For each 4-operating hour period, compute the 4-operating hour rolling average NO_X emissions as the heat input weighted average of the hourly average of NO_X emissions for a given operating hour and the 3 operating hours immediately preceding that operating hour using the applicable equation in paragraphs (h)(2) through (4) of this section. If the 4-operating hour period contains more than one operating hour with no data points (one or more continuous monitors was out-of-control for the entire hour), report the 4-operating hour rolling average NO_X emissions rate determined for the period as occurring during a period with monitor downtime.

(2) If you elect to comply with the applicable heat input-based emissions rate standard, calculate both the 4-operating hour rolling average NO_X emissions rate and the applicable 4-operating hour rolling average NO_X emissions standard, calculated using hourly values from in Table 1, using Equation 5 of this subpart.

$$E = \frac{\sum_{i=1}^{4} (E_i \times Q_i)}{\sum_{i=1}^{4} Q_i} \quad \text{(Eq. 5)}$$

Where:

E = 4-operating hour rolling average NO_X emissions (lb/MMBtu or ng/J),

E_i = Hourly average NO_X emissions rate or emissions standard for operating hour ''i'' (lb/MMBtu or ng/J), and

Q_i = Total heat input to stationary combustion turbine for operating hour ''i'' (MMBtu or J as appropriate).

(3) If you elect to comply with the applicable output-based emissions rate standard, calculate the 4-operating hour rolling average NO_X emissions rate using equation 6–1 of this subpart. Calculate the applicable 4-operating hour rolling average NO_X emissions standard, calculated using hourly values from in Table 1, using Equation 6–2 of this subpart.

$$E = \frac{\sum_{i=1}^{4} (E_i \times Q_i)}{\sum_{i=1}^{4} P_i} \quad \text{(Eq. 6-1)}$$

Where:

E = 4-operating hour rolling average NO_X emissions rate (lb/MWh or ng/J),

E_i = Hourly average NO_X emissions rate for operating hour ''i'' (lb/MMBtu or ng/J),

Q_i = Total heat input to stationary combustion turbine for operating hour ''i'' (MMBtu or J as appropriate), and

P_i = Total gross energy output from stationary combustion turbine for operating hour ''i'' (MWh or J).

$$E = \frac{\sum_{i=1}^{4} (E_i \times P_i)}{\sum_{i=1}^{4} P_i} \quad \text{(Eq. 6-2)}$$

Where:

E = 4-operating hour rolling average NO_X emissions standard (lb/MWh or ng/J),

E_i = Hourly NO_X emissions standard for operating hour ''i'' (lb/MWh or ng/J), and

P_i = Total gross energy output from stationary combustion turbine for operating hour ''i'' (MWh or J).

(4) If you elect to comply with the applicable concentration standard using a numerical average, calculate both the 4-operating hour rolling average NO_X emissions rate and the applicable 4-operating hour rolling average NO_X emissions standard, calculated using hourly values from in Table 1, using Equation 7 of this subpart.

$$E = \frac{\sum_{i=1}^{4} (C_{avei})}{4} \quad \text{(Eq. 7)}$$

Where:

E = 4-operating hour rolling average NO_X emissions (ppm), and

C_{avei} = 1-hour average NO_X concentration as determined using the procedure in § 60.13(h) or emissions standard for operating hour ''i'' (ppm).

(i) For each combined cycle combustion turbine and CHP combustion turbine, you must determine excess emissions on a 30 operating-day rolling average basis. The measured emissions rate is the NO_X emissions measured by the CEMS for a given operating day and the 29 operating days immediately preceding that day. Once each day, calculate a new 30-operating day average measured emissions rate using all hourly average values based on non out-of-control NO_X emission data for all operating hours during the previous 30-operating day operating period. Report any 30-operating day periods for which you have less than 75 percent data availability as monitor downtime. If you elect to comply with the applicable heat input-based emissions rate standard, calculate both the measured emissions rate and emissions standard using Equation 8 of this subpart. If you elect to comply with the applicable output-based emissions rate standard, calculate the measured emissions rate using Equation 9–1 of this subpart and calculate the emissions standard using Equation 9–2 of this subpart. If you elect to comply with the applicable concentration standard using a numerical average, calculate the measured emissions rate and emissions standard using Equation 10 of this subpart.

$$E = \frac{\sum_{i=1}^{n} (E_i \times Q_i)}{\sum_{i=1}^{n} Q_i} \quad \text{(Eq. 8)}$$

Where:

E = 30-operating day rolling average NO_X measured emissions rate or emissions standard for combined cycle combustion turbines and CHP combustion turbines (lb/MMBtu or ng/J),

E_i = Hourly average NO_X emissions rate or emissions standard for non out-of-control operating hour ''i'' (lb/MMBtu or ng/J),

Q_i = Total heat input to stationary combustion turbine for non out-of-control operating hour ''i'' (MMBtu or J as appropriate), and

n = Total number of non out-of-control operating hours in the 30 operating-day period.

$$E = \frac{\sum_{i=1}^{n} (E_i \times Q_i)}{\sum_{i=1}^{n} P_i} \quad \text{(Eq. 9-1)}$$

Where:

E = 30-operating day average NO_X measured emissions rate for combined cycle combustion turbines and CHP combustion turbines (lb/MWh or ng/J),

E_i = Hourly average NO_X emissions rate for non out-of-control operating hour ''i'' (lb/MMBtu or ng/J),

Q_i = Total heat input to stationary combustion turbine for non out-of-control operating hour ''i'' (MMBtu or J as appropriate),

P_i = Total gross energy output from stationary combustion turbine for non out-of-control operating hour ''i'' (MWh or J), and

n = Total number of operating non out-of-control hours in the 30 operating-day period.

$$E = \frac{\sum_{i=1}^{n} (E_i \times P_i)}{\sum_{i=1}^{n} P_i} \quad \text{(Eq. 9-2)}$$

Where:

E = 30-operating day average NO_X emissions standard for combined cycle combustion turbines and CHP combustion turbines (lb/MWh or ng/J),

E_i = Hourly NO_X emissions standard for non out-of-control operating hour ''i'' (lb/MWh or ng/J),

P_i = Total gross energy output from stationary combustion turbine for non out-of-control operating hour ''i'' (MWh or J), and

n = Total number of operating non out-of-control hours in the 30 operating-day period.

$$E = \frac{\sum_{i=1}^{n} (C_{avei})}{n} \quad \text{(Eq. 10)}$$

Where:

E = 30-operating day rolling average NO_X measured emissions rate or emissions standard for combined cycle combustion turbines and CHP combustion turbines (ppm),

C_{avei} = 1-hour average NO_X concentration as determined using the procedure in § 60.13(h) or emissions standard for non out-of-control operating hour ''i'' (ppm), and

n = Total number of operating hours in the 30 operating-day period.

§ 60.4360 How do I use fuel sulfur analysis to determine the total sulfur content of the fuel combusted in my stationary combustion turbine?

(a) If you elect to demonstrate compliance with a SO_2 emissions standard according to § 60.4333(d)(2), the fuel analyses may be performed either by you, a service contractor retained by you, the fuel vendor, or any other qualified agency as determined by the delegated permitting authority using the sampling frequency specified in § 60.4365.

(b) Representative fuel analysis samples may be collected either manually or by an automatic sampling system. For automatic sampling, following ASTM D5287 (incorporated by reference, see § 60.17) for gaseous fuels or ASTM D4177 (incorporated by reference, see § 60.17) for liquid fuels. For reference purposes when manually collecting gaseous samples, see Gas Processors Association Standard 2166 (incorporated by reference, see § 60.17). For reference purposes when manually collecting liquid samples, see either Gas Processors Association Standard 2174 or the procedures for manual pipeline sampling in section 14 of ASTM D4057 (both of which are incorporated by reference, see § 60.17).

(c) Each collected fuel analysis sample must be analyzed for the total sulfur content of the fuel and heating value using the methods specified in paragraphs (c)(1) or (2) of this section, as applicable to the fuel type.

(1) For the sulfur content of liquid fuels, ASTM D129, or alternatively D1266, D1552, D2622, D4294, or D5453 (all of which are incorporated by reference, see § 60.17). For the heating value of liquid fuels, ASTM D240 or D4809 (both of which are incorporated by reference, see § 60.17); or

(2) For the sulfur content of gaseous fuels, ASTM D1072, or alternatively D3246, D4468, or D6667 (all of which are incorporated by reference, see § 60.17). If the total sulfur content of the gaseous fuel during the most recent compliance demonstration was less than half the applicable standard, ASTM D4084, D4810, D5504, or D6228, or Gas Processors Association Standard 2377 (all of which are incorporated by reference, see § 60.17), which measure the major sulfur compounds, may be used. For the heating value of gaseous fuels, ASTM D1826, or alternatively D3588, D4891, or D7164, or Gas Processors Association Standard 2172 (all of which are incorporated by reference, see § 60.17).

§ 60.4365 How frequently must I determine the fuel sulfur content?

(a) If you are complying with requirements in § 60.4360, the total sulfur content of all fuels combusted in each stationary combustion turbine subject to an SO_2 emissions standard in § 60.4330 must be determined according to the schedule specified in paragraphs (a)(1) or (2) of this section, as applicable to the fuel type, unless you determine a custom schedule for the stationary combustion turbine according to paragraph (b) of this section.

(1) *Liquid fuel.* Use one of the total sulfur sampling options and the associated sampling frequency described in sections 2.2.3, 2.2.4.1, 2.2.4.2, and 2.2.4.3 in appendix D to part 75 of this chapter (*i.e.* flow proportional sampling, daily sampling, sampling from the unit's storage tank after each addition of fuel to the tank, or sampling each delivery prior to combining it with liquid fuel already in the intended storage tank).

(2) *Gaseous fuel.* If the fuel is supplied without intermediate bulk storage, the sulfur content value of the gaseous fuel must be determined and recorded once per operating day.

(b) *Custom schedules.* As an alternative to the requirements of paragraph (a) of this section, you may implement custom schedules for determination of the total sulfur content of gaseous fuels, based on the design and operation of the affected facility and the characteristics of the fuel supply using the procedures provided in either paragraph (b)(1) and (2) of this section. Either you or the fuel vendor may perform the sampling. As an alternative to using one of these procedures, you may use a custom schedule that has been substantiated with data and approved by the Administrator or delegated authority as a change in monitoring prior to being used to comply with the applicable standard in § 60.4330.

(1) You may determine and implement a custom sulfur sampling schedule for your stationary combustion turbine using the procedure specified in paragraphs (b)(1)(i) through (iv) of this section.

(i) Obtain daily total sulfur content measurements for 30 consecutive operating days, using the applicable methods specified in this subpart. Based on the results of the 30 daily samples, the required frequency for subsequent monitoring of the fuel's total sulfur content must be as specified in paragraph (b)(1)(ii), (iii), or (iv) of this section, as applicable.

(ii) If none of the 30 daily measurements of the fuel's total sulfur content exceeds half the applicable standard, subsequent sulfur content monitoring may be performed at 12-month intervals provided the fuel source or supplier does not change. If any of the samples taken at 12-month intervals has a total sulfur content greater than half but less than the applicable standard, follow the procedures in paragraph (b)(1)(iii) of this section. If any measurement exceeds the applicable standard, follow the procedures in paragraph (b)(1)(iv) of this section.

(iii) If at least one of the 30 daily measurements of the fuel's total sulfur content is greater than half but less than the applicable standard, but none exceeds the applicable standard, then:

(A) Collect and analyze a sample every 30 days for 3 months. If any sulfur content measurement exceeds the applicable standard, follow the procedures in paragraph (b)(1)(iv) of this section. Otherwise, follow the procedures in paragraph (b)(1)(iii)(B) of this section.

(B) Begin monitoring at 6-month intervals for 12 months. If any sulfur content measurement exceeds the applicable standard, follow the procedures in paragraph (b)(1)(iv) of this section. Otherwise, follow the procedures in paragraph (b)(1)(iii)(C) of this section.

(C) Begin monitoring at 12-month intervals. If any sulfur content measurement exceeds the applicable standard, follow the procedures in paragraph (b)(1)(iv) of this section. Otherwise, continue to monitor at this frequency.

(iv) If a sulfur content measurement exceeds the applicable standard, immediately begin daily monitoring according to paragraph (c)(1)(i) of this section. Daily monitoring must continue until 30 consecutive daily samples, each having a sulfur content no greater than the applicable standard, are obtained. At that point, the applicable procedures of paragraph (b)(1)(ii) or (iii) of this section must be followed.

(2) You may use the data collected from the 720-hour sulfur sampling demonstration described in section 2.3.6 in appendix D to part 75 of this chapter to determine and implement a sulfur sampling schedule for your stationary combustion turbine using the procedure specified in paragraphs (b)(2)(i) through (iii) of this section.

(i) If the maximum fuel sulfur content obtained from any of the 720 hourly samples does not exceed half the applicable standard, then the minimum required sampling frequency must be one sample at 12 month intervals.

(ii) If any sample result exceeds half the applicable standard, but none exceeds the applicable standard, follow the provisions of paragraph (b)(1)(iii) of this section.

(iii) If the sulfur content of any of the 720 hourly samples exceeds the applicable standard, follow the provisions of paragraph (b)(1)(iv) of this section.

§ 60.4370 How do I demonstrate compliance with my SO_2 emissions standard using records of the fuel sulfur content?

(a) If you elect to demonstrate compliance with a SO_2 emissions standard according to § 60.4333(d)(3), you must maintain on-site records (such as a current, valid purchase contract, tariff sheet, or transportation contract) documenting that total sulfur content for the fuel combusted in your stationary combustion turbine at all times does not exceed the conditions specified in paragraph (b) through (e) of this section, as applicable to your stationary combustion turbine.

(b) If your stationary combustion turbine is subject to the SO_2 emissions standard in § 60.4330(a), then the fuel combusted must have a potential SO_2 emissions rate of 26 ng/J (0.060 lb/MMBtu) heat input or less.

(c) If your stationary combustion turbine is subject to the SO_2 emissions standard in § 60.4330(b), then the total sulfur content of the gaseous fuel combusted must be 650 (mg/scm) (28 gr/100 scf).

(d) If your stationary combustion turbine is subject to the SO_2 emissions standard in § 60.4330(c) or (d), the total sulfur content of the fuel combusted must be:

(1) For natural gas, 140 gr/100 scf or less.

(2) For fuel oil, 0.40 weight percent (4,000 ppmw) or less.

(3) For other fuels, potential SO_2 emissions of 180 ng/J (0.42 lb/MMBtu) heat input or less.

(e) Representative fuel sampling data following the procedures specified in section 2.3.1.4 or 2.3.2.4 in appendix D to part 75 of this chapter documenting that the fuel meets the part 75 requirements to be considered either pipeline natural gas or natural gas.

§ 60.4372 How do I demonstrate compliance with my SO_2 emissions standard and determine excess emissions using a SO_2 CEMS?

(a) If you demonstrate continuous compliance using a CEMS for measuring SO_2 emissions, excess emissions are defined as the applicable averaging period, either 4-operating hour or 30-operating day, during which the average SO_2 emissions from your stationary combustion turbine measured by the CEMS exceeds the applicable SO_2 emissions standard specified in § 60.4330 as determined using the procedures specified in this section that apply to your stationary combustion turbine.

(b) You must install, calibrate, maintain, and operate a CEMS for measuring SO_2 concentrations and either O_2 or CO_2 concentrations at the outlet of your stationary combustion turbine, and record the output of the system.

(c) The 1-hour average SO_2 emissions rate measured by a CEMS must be expressed in ng/J or lb/MMBtu heat input and must be used to calculate the average emissions rate under § 60.4330.

(d) You must use the procedures for installation, evaluation, and operation of the CEMS as specified in § 60.13 and paragraphs (d)(1) through (3) of this section.

(1) Each CEMS must be operated according to the applicable procedures under Performance Specifications 1, 2, and 3 in appendix B of this part;

(2) Quarterly accuracy determinations and daily calibration drift tests must be performed according to Procedure 1 in appendix F of this part; and

(3) The span value of the SO_2 CEMS at the outlet from the SO_2 control device (or outlet of the stationary combustion turbine if no SO_2 control device is used) must be 125 percent of either the highest applicable standard or highest potential SO_2 emissions rate of the fuel combusted.

(e) Correction of measured SO_2 concentrations to 15 percent O_2 is not allowed.

(f) If you have installed and certified a SO_2 CEMS that meets the requirements of part 75 of this chapter, the delegated permitting authority can approve that only quality assured data from the CEMS must be used to identify excess emissions under this subpart. You must report periods where the missing data substitution procedures in subpart D of part 75 are applied as monitoring system downtime in the excess emissions and monitoring performance report required under § 60.7(c).

(g) All required fuel flow rate, steam flow rate, temperature, pressure, and megawatt data must be reduced to hourly averages.

(h) Calculate the hourly average SO_2 emissions rate, in units of the emissions standard under § 60.4330, using lb/MMBtu for units complying with the input-based standard or using equation 11 of this subpart for units complying with the output-based standard:

(1) For simple-cycle operation:

$$E = \frac{(SO_2)_h \times Q}{P} \qquad \text{(Eq. 11)}$$

Where:

E = Hourly SO_2 emissions rate, in lb/MWh,

$(SO_2)_h$ = Average hourly SO_2 emissions rate, in lb/MMBtu,

Q = Hourly heat input rate to the stationary combustion turbine, in MMBtu, measured using the fuel flow meter(s), *e.g.,* calculated using Equation D–15a in appendix D to part 75 of this chapter, an O_2 or CO_2 CEMS and a stack flow meter, or the methodologies in appendix F to part 75 of this chapter, and

P = Gross energy output of the stationary combustion turbine in MWh.

(2) The gross energy output is calculated as the sum of the total electrical and mechanical energy generated by the stationary combustion turbine, the additional electrical or mechanical energy (if any) generated by the steam turbine following the heat recovery steam generating unit, and the total useful thermal energy output that is not used to generate additional electricity or mechanical output, expressed in equivalent MWh, as calculated using Equations 12 and 13 of this subpart.

$$P = \frac{(Pe)_t}{T} + \frac{(Pe)_c}{T} + P_s + P_o \qquad \text{(Eq. 12)}$$

Where:

P = Gross energy output of the stationary combustion turbine system in MWh,

$(Pe)_t$ = Electrical or mechanical energy output of the stationary combustion turbine in MWh,

$(Pe)_c$ = Electrical or mechanical energy output (if any) of the steam turbine in MWh,

P_s = Useful thermal energy of the steam, measured relative to ISO conditions, not used to generate additional electric or mechanical output, in MWh, and

P_o = Other useful heat recovery, measured relative to ISO conditions, not used for steam generation or performance enhancement of the stationary combustion turbine.

T = Electric Transmission and Distribution Factor. Equal to 0.95 for CHP combustion turbine where at least 20.0 percent of the total gross useful energy output consists of electric or direct mechanical output and 20.0 percent of the total gross useful energy output consists of useful thermal output on an annual basis. Equal to 1.0 for all other combustion turbines.

$$P_s = \frac{Q_m \times H}{3.413 \times 10^6\ Btu/MWh} \qquad \text{(Eq. 13)}$$

Where:

P_s = Useful thermal energy of the steam, measured relative to ISO conditions, not used to generate additional electric or mechanical output, in MWh,

Q_m = Measured steam flow rate in lb,

H = Enthalpy of the steam at measured temperature and pressure relative to ISO conditions, in Btu/lb, and

3.413×10^6 = Conversion factor from Btu to MWh.

(3) For mechanical drive applications complying with the output-based standard, use equation 14 of this subpart:

$$E = \frac{(SO_2)_m}{BL \times AL} \qquad \text{(Eq. 14)}$$

Where:

E = SO_2 emissions rate in lb/MWh,

$(SO_2)_m$ = SO_2 emissions rate in lb/h,

BL = Manufacturer's base load rating of turbine, in MW, and

AL = Actual load as a percentage of the base load rating.

(i) For stationary combustion turbines other than combined cycle combustion turbines and CHP combustion turbines, you must determine excess emissions on a 4-operating hour rolling average basis. The ''4-operating hour rolling average SO_2 measured emissions rate'' is the SO_2 emissions measured by the CEMS for a given operating hour and the 3 consecutive operating hours immediately preceding that hour expressed in the units appropriate for the SO_2 emissions standard that is applied to your stationary combustion turbine. Each operating hour, calculate the 4-operating hour rolling average SO_2 measured emissions rate using all of the non out-of-control SO_2 emission data obtained during the previous 4-operating hour operating period. If the 4-operating hour period contains more than one operating hour with no data points (one or more CEMS was out-of-control for the entire hour), report the 4-operating hour rolling average SO_2 emissions rate determined for the period as occurring during a period with monitor downtime. If you elect to comply with the applicable heat input-based emissions rate standard, calculate both the measured emissions rate and the emissions standard using Equation 15 of this subpart. If you elect to comply with the applicable output-based emissions standard, calculate the measured emissions rate using Equation 16–1 of this subpart and calculate the emissions standard using Equation 16–2 of this subpart.

$$E = \frac{\sum_{i=1}^{4} (E_i \times Q_i)}{\sum_{i=1}^{4} Q_i} \qquad \text{(Eq. 15)}$$

Where:

E = 4-operating hour rolling average SO_2 measured emissions rate or emissions standard for stationary combustion turbines other than combined cycle combustion turbines and CHP combustion turbines (lb/MMBtu or ng/J),

E_i = Hourly average SO_2 emissions rate or emissions standard for non out-of-control operating hour ''i'' (lb/MMBtu or ng/J), and

Q_i = Total heat input to stationary combustion turbine for non out-of-control operating hour ''i'' (MMBtu or J as appropriate).

$$E = \frac{\sum_{i=1}^{4} (E_i \times Q_i)}{\sum_{i=1}^{4} P_i} \qquad \text{(Eq. 16-1)}$$

Where:

E = 4-operating hour rolling average SO_2 measured emissions rate for stationary combustion turbines other than combined cycle combustion turbines and CHP combustion turbines (lb/MWh or ng/J),

E_i = Hourly average SO_2 emissions rate for non out-of-control operating hour ''i'' (lb/MMBtu or ng/J),

Q_i = Total heat input to stationary combustion turbine for non out-of-control operating hour ''i'' (MMBtu or J as appropriate), and

P_i = Total gross energy output from stationary combustion turbine for non out-of-control operating hour ''i'' (MWh or J).

$$E = \frac{\sum_{i=1}^{4} (E_i \times P_i)}{\sum_{i=1}^{4} P_i} \qquad \text{(Eq. 16-2)}$$

Where:

E = 4-operating hour rolling average SO_2 emissions standard for stationary combustion turbines other than combined cycle combustion turbines and CHP combustion turbines (lb/MWh or ng/J),

E_i = Hourly SO_2 emissions standard for non out-of-control operating hour ''i'' (lb/MMBtu or ng/J), and

P_i = Total gross energy output from stationary combustion turbine for non out-of-control operating hour ''i'' (MWh or J).

(ii) For combined cycle combustion turbines and CHP combustion turbines, you must determine excess emissions on a 30 operating-day rolling average basis. The excess emissions level is the heat input weighted-average of the SO_2 emissions measured by the CEMS for a given operating day and the 29 operating days immediately preceding that day. Once each day, calculate a new 30-operating day average measured emissions rate using all hourly average values based on non out-of-control SO_2 emission data for all operating hours during the previous 30-operating day operating period. Report any 30-operating day periods for which you have less than 75 percent data availability as monitor downtime. If you elect to comply with the applicable heat input-based emissions standard, calculate the measured emissions rate and emissions rate using Equation 17 of this subpart. If you elect to comply with the applicable output-based standard, calculate the measured emissions rate using Equation 18–1 of this subpart and calculate the emissions standard using Equation 18–2 of this subpart.

$$E = \frac{\sum_{i=1}^{n} (E_i \times Q_i)}{\sum_{i=1}^{n} Q_i} \qquad \text{(Eq. 17)}$$

Where:

E = 30-operating day rolling average SO_2 measured emissions rate or emissions standard for combined cycle combustion turbines and CHP combustion turbines (lb/MMBtu or ng/J),
E_i = Hourly average SO_2 emissions rate or emissions standard for non out-of-control operating hour ''i'' (lb/MMBtu or ng/J),
Q_i = Total heat input to stationary combustion turbine for non out-of-control operating hour ''i'' (MMBtu or J as appropriate), and
n = Total number of non out-of-control operating hours in the 30 operating-day period.

$$E = \frac{\sum_{i=1}^{n} (E_i \times Q_i)}{\sum_{i=1}^{n} P_i} \quad \text{(Eq. 18-1)}$$

Where:
E = 30-operating day average SO_2 measured emissions rate for combined cycle combustion turbines and CHP combustion turbines (lb/MWh or ng/J),
E_i = Hourly average SO_2 measured emissions rate for non out-of-control operating hour ''i'' (lb/MMBtu or ng/J),
Q_i = Total heat input to stationary combustion turbine for non out-of-control operating hour ''i'' (MMBtu or J as appropriate),
P_i = Total gross energy output from stationary combustion turbine for non out-of-control operating hour ''i'' (MWh or J), and
n = Total number of non out-of-control operating hours in the 30 operating-day period.

$$E = \frac{\sum_{i=1}^{n} (E_i \times P_i)}{\sum_{i=1}^{n} P_i} \quad \text{(Eq. 18-2)}$$

Where:
E = 30-operating day average SO_2 emissions standard for combined cycle combustion turbines and CHP combustion turbines (lb/MWh or ng/J),
E_i = Hourly SO_2 emissions standard for non out-of-control operating hour ''i'' (lb/MWh or ng/J),
P_i = Total gross energy output from stationary combustion turbine for non out-of-control operating hour ''i'' (MWh or J), and
n = Total number of non out-of-control operating hours in the 30 operating-day period.

Recordkeeping and Reporting

§ 60.4375 What reports must I submit?

(a) An owner or operator of a stationary combustion turbine that elects to continuously monitor parameters or emissions, or to periodically determine the fuel sulfur content under this subpart, must submit reports of excess emissions and monitor downtime, according to § 60.7(c). Excess emissions must be reported for all periods of unit operation, including startup, shutdown, and malfunction.

(b) An owner or operator of a stationary combustion turbine that performs performance tests to demonstrate compliance with this subpart must submit a written report of the results of each performance test before the close of business on the 60th day following the completion of the performance test, except as specified in paragraph (c) of this part.

(c)(1) Within 60 days after the date of completing each performance test (see § 60.8) as required by this subpart you must submit the results of the performance tests required by this subpart to EPA's WebFIRE database by using the Compliance and Emissions Data Reporting Interface (CEDRI) that is accessed through EPA's Central Data Exchange (CDX) (*www.epa.gov/cdx*). Performance test data must be submitted in the file format generated through use of EPA's Electronic Reporting Tool (ERT) (see *http://www.epa.gov/ttn/chief/ert/index.html*). Only data collected using test methods on the ERT Web site are subject to this requirement for submitting reports electronically to WebFIRE. Owners or operators who claim that some of the information being submitted for performance tests is confidential business information (CBI) must submit a complete ERT file including information claimed to be CBI on a compact disk or other commonly used electronic storage media (including, but not limited to, flash drives) to EPA. The electronic media must be clearly marked as CBI and mailed to U.S. EPA/OAPQS/CORE CBI Office, Attention: WebFIRE Administrator, MD C404–02, 4930 Old Page Rd., Durham, NC 27703. The same ERT file with the CBI omitted must be submitted to EPA via CDX as described earlier in this paragraph. At the discretion of the delegated authority, you must also submit these reports, including the confidential business information, to the delegated authority in the format specified by the delegated authority.

(2) Within 60 days after the date of completing each CEMS performance evaluation test (see § 60.13), you must submit the relative accuracy test audit data electronically into EPA's Central Data Exchange by using the Electronic Reporting Tool as mentioned in paragraph (c)(1) of this section. Only data collected using test methods compatible with ERT are subject to this requirement to be submitted electronically to EPA's CDX.

(3) All reports required by this subpart not subject to the requirements in paragraphs (c)(1) and (2) of this section must be sent to the Administrator or delegated authority at the appropriate address listed in § 63.13. The Administrator or delegated authority may request a report in any form suitable for the specific case (e.g., by commonly used electronic media such as Excel spreadsheet, on CD or hard copy). The Administrator or delegated authority retains the right to require submittal of reports subject to paragraphs (c)(1) and (2) of this section in paper format.

(d) The notification requirements of § 60.8 apply to the initial and subsequent performance tests.

(e) An owner or operator of an affected facility complying with § 60.4333(b)(3) must notify the delegated permitting authority within 15 calendar days after the facility recommences operation.

(f) An owner or operator of an affected facility complying with § 60.4333(b)(4) must notify the delegated permitting authority within 15 calendar days after the facility has operated more than 50 operating hours since the date the previous performance test was required to be conducted.

§ 60.4380 How are NO_X excess emissions and monitor downtime reported?

(a) For reports required under § 60.4375(a), periods of excess emissions and monitor downtime for stationary combustion turbines using water or steam to fuel ratio monitoring are reported as specified in paragraphs (a)(1) through (3) of this section.

(1) An excess emission that must be reported is any operating hour for which the 4-operating hour rolling average steam or water to fuel ratio, as measured by the continuous monitoring system, is less than the acceptable steam or water to fuel ratio needed to demonstrate compliance with § 60.4320, as established during the most recent performance test. Any operating hour during which no water or steam is injected into the turbine when the specific conditions require water or steam injection for NO_X control will also be considered an excess emission.

(2) A period of monitor downtime that must be reported is any operating hour in which water or steam is injected into the turbine, but the parametric data needed to determine the steam or water to fuel ratio are unavailable or out-of-control.

(3) Each report must include the average steam or water to fuel ratio,

average fuel consumption, and the stationary combustion turbine load during each excess emission.

(b) For reports required under § 60.4375(a), periods of excess emissions and monitor downtime for stationary combustion turbines using a CEMS, excess emissions are reported as specified in paragraphs (b)(1) through (3) of this section.

(1) An excess emission that must be reported is any unit operating period in which the 4-operating hour or 30-operating day rolling average NO_X emissions rate exceeds the applicable emissions standard in § 60.4320 as determined in § 60.4350.

(2) A period of monitor downtime that must be reported is any operating hour in which the data for any of the following parameters are either missing or out-of-control: NO_X concentration, CO_2 or O_2 concentration, stack flow rate, heat input rate, steam flow rate, steam temperature, steam pressure, or megawatts. You are only required to monitor parameters used for compliance purposes.

(3) For hours with multiple emission standards, the applicable standard for that hour is determined based on the condition, excluding periods of monitor downtime, that corresponded to the highest emissions standard.

(c) For reports required under § 60.4375(a), periods of excess emissions and monitor downtime for stationary combustion turbines using combustion parameters or parameters that document proper operation of the NO_X emission controls excess emissions and monitor downtime are reported as specified in paragraphs (c)(1) and (2) of this section.

(1) Excess emissions that must be reported are each 4-operating hour rolling average in which any monitored parameter (as averaged over the 4 operating-hour period) does not achieve the target value or is outside the acceptable range defined in the parameter monitoring plan for the unit.

(2) Periods of monitor downtime that must be reported are each operating hour in which any of the required parametric data are either not recorded or are out-of-control.

§ 60.4385 How are SO_2 excess emissions and monitor downtime reported?

(a) If you choose the option to monitor the sulfur content of the fuel, excess emissions and monitor downtime are defined as follows:

(1) For samples obtained using daily sampling, flow proportional sampling, or sampling from the unit's storage tank, excess emissions occur each operating hour included in the period beginning on the date and hour of any sample for which the sulfur content of the fuel being fired in the stationary combustion turbine exceeds the applicable standard and ending on the date and hour that a subsequent sample is taken that demonstrates compliance with the sulfur standard.

(2) If the option to sample each delivery of fuel oil has been selected, you must immediately switch to one of the other oil sampling options (i.e., daily sampling, flow proportional sampling, or sampling from the unit's storage tank) if the sulfur content of a delivery exceeds 0.05 weight percent, 0.15 weight percent, or 0.40 weight percent as applicable. You must continue to use one of the other sampling options until all of the oil from the delivery has been combusted, and you must evaluate excess emissions according to paragraph (a) of this section. When all of the fuel from the delivery has been combusted, you may resume using the as-delivered sampling option.

(3) A period of monitor downtime begins when a required sample is not taken by its due date. A period of monitor downtime also begins on the date and hour of a required sample, if invalid results are obtained. The period of monitor downtime ends on the date and hour of the next valid sample.

(b) If you choose the option to maintain records of the fuel sulfur content, excess emissions are defined as any period during which you burn a fuel that you do not have appropriate fuel records or that fuel contains sulfur greater than the applicable standard.

(c) For reports required under § 60.4375(a), periods of excess emissions and monitor downtime for stationary combustion turbines using a CEMS, excess emissions are reported as specified in paragraphs (c)(1) through (2) of this section.

(1) An excess emission that must be reported is any unit operating period in which the 4-operating hour or 30-operating day rolling average SO_2 emissions rate exceeds the applicable emissions standard in § 60.4330 as determined in § 60.4372.

(2) A period of monitor downtime that must be reported is any operating hour in which the data for any of the following parameters are either missing or out-of-control: SO_2 concentration, CO_2 or O_2 concentration, stack flow rate, heat input rate, steam flow rate, steam temperature, steam pressure, or megawatts. You are only required to monitor parameters used for compliance purposes.

§ 60.4390 What records must I maintain?

(a) You must maintain records of your information used to demonstrate compliance with this subpart as specified in § 60.7.

(b) An owner or operator of a stationary combustion turbine that uses the other fuels, part-load, or low temperature NO_X standards in the compliance demonstration must maintain concurrent records of the hourly heat input, percent load, ambient temperature, and emissions data as applicable.

(c) An owner or operator of a stationary combustion turbine that uses the tuning NO_X standard in the compliance demonstration must identify the hours on which the maintenance was performed and a description of the maintenance.

(d) An owner or operator of a stationary combustion turbine that demonstrates compliance using the output-based standard must maintain concurrent records of the total gross energy output and emissions data.

(e) An owner or operator of a stationary combustion turbine that demonstrates compliance using the water or steam to fuel ratio or a parameter continuous monitoring system must maintain continuous records of the appropriate parameters.

(f) An owner or operator of a stationary combustion turbine complying with the fuel based SO_2 standard must maintain records of the results of all fuel analyses or a current, valid purchase contract, tariff sheet, or transportation contract.

§ 60.4395 When must I submit my reports?

Consistent with § 60.7(c), all reports required under § 60.7(c) must be postmarked by the 30th day following the end of each 6-month period.

Performance Tests

§ 60.4400 How do I conduct performance tests to demonstrate compliance with my NO_X emissions standard if I do not have a NO_X CEMS?

(a) You must conduct the performance test according to the requirements in § 60.8 and paragraphs (b) through (d) of this section.

(b) You must use the methods in either paragraph (b)(1) or (2) of this section to measure the NO_X concentration for each test run.

(1) Measure the NO_X concentration using EPA Method 7E in appendix A–4 of this part or EPA Method 20 in appendix A–7 of this part. In addition, when only natural gas is being combusted ASTM D6522 (incorporated by reference, see § 60.17) can be used instead of EPA Method 20 in appendix

A–7 of this part to determine the oxygen content in the exhaust gas. For units complying with the output-based standard, concurrently measure the stack gas flow rate, using EPA Methods 1 and 2 in appendix A–1 of this part, and measure and record the electrical and thermal output from the unit. Then, use Equation 19 of this subpart to calculate the NO_X emissions rate:

$$E = \frac{1.194 \times 10^{-7} \times (NO_x)_c \times Q_{std}}{P} \quad \text{(Eq. 19)}$$

Where:

E = NO_X emissions rate, in lb/MWh,

1.194×10^{-7} = Conversion constant, in lb/dscf-ppm,

$(NO_X)_c$ = Average NO_X concentration for the run, in ppm,

Q_{std} = Average stack gas volumetric flow rate, in dscf/h, and

P = Average gross electrical and mechanical energy output of the stationary combustion turbine, in MW (for simple-cycle operation), for combined-cycle operation, the sum of all electrical and mechanical output from the combustion and steam turbines, or, for CHP operation, the sum of all electrical and mechanical output from the combustion and steam turbines plus all useful recovered thermal output not used for additional electric or mechanical generation or to enhance the performance of the stationary combustion turbine, in MW, calculated according to § 60.4350.

(2) Measure the NO_X and diluent gas concentrations, using either EPA Method 7E in appendix A–4 of this part and EPA Method 3A in appendix A–2 of this part, or EPA Method 20 in appendix A–7 of this part. In addition, when only natural gas is being combusted ASTM D6522 (incorporated by reference, see § 60.17) can be used instead of EPA Method 3A in appendix A–2 of this part or EPA Method 20 in appendix A–7 of this part to determine the oxygen content in the exhaust gas. Concurrently measure the heat input to the unit, using a fuel flowmeter (or flowmeters), an O_2 or CO_2 CEMS along with a stack flow meter, or the methodologies in appendix F to part 75 of this chapter, and for units complying with the output-based standard measure the electrical, mechanical, and thermal output of the unit. Use EPA Method 19 in appendix A–7 of this part to calculate the NO_X emissions rate in lb/MMBtu. Then, use Equations 1 and, if necessary, 2 and 3 of this subpart in § 60.4350(f) to calculate the NO_X emissions rate in lb/MWh.

(c) You must use the methods in either paragraph (c)(1) or (2) of this section to select the sampling traverse points for NO_X and (if applicable) diluent gas.

(1) You must select the sampling traverse points for NO_X and (if applicable) diluent gas according to EPA Method 20 in appendix A–7 of this part or EPA Method 1 in appendix A–1 of this part (non-particulate procedures), and sampled for equal time intervals. The sampling must be performed with a traversing single-hole probe, or, if feasible, with a stationary multi-hole probe that samples each of the points sequentially. Alternatively, a multi-hole probe designed and documented to sample equal volumes from each hole may be used to sample simultaneously at the required points.

(2) As an alternative to paragraph (c)(1) of this section, you may select the sampling traverse points for NO_X and (if applicable) diluent gas according to requirements in paragraphs (c)(2)(i) and (ii) of this section.

(i) You perform a stratification test for NO_X and diluent pursuant to the procedures specified in section 6.5.6.1(a) through (e) in appendix A of part 75 of this chapter.

(ii) Once the stratification sampling is completed, you use the following alternative sample point selection criteria for the performance test specified in paragraphs (c)(2)(ii)(A) through (

(A) If each of the individual traverse point NO_X concentrations is within ±10 percent of the mean concentration for all traverse points, or the individual traverse point diluent concentrations differs by no more than ±0.5 percent CO_2 (or O_2) from the mean for all traverse points, then you may use three points (located either 16.7, 50.0 and 83.3 percent of the way across the stack or duct, or, for circular stacks or ducts greater than 2.4 meters (7.8 feet) in diameter, at 0.4, 1.2, and 2.0 meters from the wall). The three points must be located along the measurement line that exhibited the highest average NO_X concentration during the stratification test; or

(B) For a stationary combustion turbine subject to a NO_X emissions standard greater than 15 ppm at 15 percent O_2, you may sample at a single point, located at least 1 meter from the stack wall or at the stack centroid if each of the individual traverse point NO_X concentrations is within ±5 percent of the mean concentration for all traverse points, or the individual traverse point diluent concentrations differs by no more than ±0.3 percent CO_2 (or O_2) from the mean for all traverse points; or

(C) For a stationary combustion turbine subject to a NO_X emissions standard less than or equal to 15 ppm at 15 percent O_2, you may sample at a single point, located at least 1 meter from the stack wall or at the stack centroid if each of the individual traverse point NO_X concentrations is within ±2.5 percent of the mean concentration for all traverse points, or the individual traverse point diluent concentrations differs by no more than ±0.15 percent CO_2 (or O_2) from the mean for all traverse points.

(d) The performance test must be done at any load condition within plus or minus 25 percent of 100 percent of the base load rating. You may perform testing at the highest achievable load point, if at least 75 percent of the base load rating cannot be achieved in practice. You must conduct three separate test runs for each performance test. The minimum time per run is 60 minutes.

(1) If the stationary combustion turbine combusts both natural gas and fuels other than natural gas as primary or backup fuels, separate performance testing is required for each fuel.

(2) For a combined cycle or CHP combustion turbine with supplemental heat (duct burner), you must measure the total NO_X emissions downstream of the duct burner. The duct burner must be in operation during the performance test.

(3) If water or steam injection is used to control NO_X with no additional post-combustion NO_X control and you choose to monitor the steam or water to fuel ratio in accordance with § 60.4335, then that monitoring system must be operated concurrently with each EPA Method 20 in appendix A–7 of this part or EPA Method 7E in appendix A–4 of this part run and must be used to determine the fuel consumption and the steam or water to fuel ratio necessary to comply with the applicable § 60.4320 NO_X emissions standard.

(4) If you elect to install a CEMS, the performance evaluation of the CEMS may either be conducted separately or

(as described in § 60.4405) as part of the initial performance test of the affected unit.

(5) The ambient temperature must be greater than 0 °F during the performance test. The delegated permitting authority may approve performance testing below 0 °F if the timing of the required performance test and environmental conditions make it impractical to test at ambient conditions greater than 0 °F.

§ 60.4405 How do I conduct a performance test if I use a NO_X CEMS?

(a) If you use a CEMS the performance test must be performed according to the procedures specified in paragraph (b) of this section.

(b) The initial performance test must use the procedure specified in paragraphs (b)(1) through (4) of this section.

(1) Perform a minimum of nine RATA reference method runs, with a minimum time per run of 21 minutes, at a single load level, within plus or minus 25 percent of 100 percent of the base load rating. You may perform testing at the highest achievable load point, if at least 75 percent of the base load rating cannot be achieved in practice. The ambient temperature must be greater than 0 °F during the RATA runs. The delegated permitting authority may approve performance testing below 0 °F if the timing of the required performance test and environmental conditions make it impractical to test at ambient conditions greater than 0 °F.

(2) For each RATA run, concurrently measure the heat input to the unit using a fuel flow meter (or flow meters) or the methodologies in appendix F to part 75 of this chapter, and for units complying with the output-based standard, measure the electrical and thermal output from the unit.

(3) Use the test data both to demonstrate compliance with the applicable NO_X emissions standard under § 60.4320 and to provide the required reference method data for the RATA of the CEMS described under § 60.4342.

(4) Compliance with the applicable emissions standard in § 60.4320 is achieved if the sum of the NO_X emissions divided by the heat input (or gross energy output) for all the RATA runs, expressed in units of lb/MMBtu or lb/MWh, does not exceed the emissions standard.

§ 60.4415 How do I conduct performance tests to demonstrate compliance with my SO_2 emissions standard?

(a) An owner or operator of an affected facility complying with the fuel based standard must submit fuel records (such as a current, valid purchase contract, tariff sheet, transportation contract, or results of a fuel analysis) to satisfy the requirements of § 60.8.

(b) An owner or operator of an affected facility complying with the SO_2 emissions standard must conduct the performance test by measuring the SO_2 emissions in the stationary combustion turbine exhaust gases using the methods in either paragraph (b)(1) or (2) of this section.

(1) Measure the SO_2 concentration using EPA Methods 6, 6C, 8 in appendix A–4 of this part, or EPA Method 20 in appendix A–7 of this part. In addition, the American Society of Mechanical Engineers (ASME) standard, ASME PTC 19–10–1981–Part 10, ''Flue and Exhaust Gas Analyses,'' manual methods for sulfur dioxide (incorporated by reference, see § 60.17) can be used instead of EPA Method 6 in appendix A–4 of this part or EPA Method 20 in appendix A–7 of this part. For units complying with the output based standard, concurrently measure the stack gas flow rate, using EPA Methods 1 and 2 in appendix A–1 of this part, and measure and record the electrical and thermal output from the unit. Then use Equation 20 of this subpart to calculate the SO_2 emissions rate:

$$E = \frac{1.664 \times 10^{-7} \times (SO_2)_c \times Q_{std}}{P} \qquad \text{(Eq. 20)}$$

Where:

E = SO_2 emissions rate, in lb/MWh,

1.664×10^{-7} = Conversion constant, in lb/dscf-ppm,

$(SO_2)_c$ = Average SO_2 concentration for the run, in ppm,

Q_{std} = Average stack gas volumetric flow rate, in dscf/h, and

P = Average gross electrical and mechanical energy output of the stationary combustion turbine, in MW (for simple-cycle operation), for combined-cycle operation, the sum of all electrical and mechanical output from the combustion and steam turbines, or, for CHP operation, the sum of all electrical and mechanical output from the combustion and steam turbines plus all useful recovered thermal output not used for additional electric or mechanical generation or to enhance the performance of the stationary combustion turbine, in MW, calculated according to § 60.4350(f)(2).

(2) Measure the SO_2 and diluent gas concentrations, using either EPA Methods 6, 6C, or 8 in appendix A–4 of this part and EPA Method 3A in appendix A–2 of this part, or EPA Method 20 in appendix A–7 of this part. In addition, you may use the manual methods for sulfur dioxide ASME PTC 19–10–1981–Part 10 (incorporated by reference, see § 60.17). Concurrently measure the heat input to the unit, using a fuel flowmeter (or flowmeters), an O_2 or CO_2 CEMS along with a stack flow meter, or the methodologies in appendix F to part 75 of this chapter, and for units complying with the output based standard measure the electrical and thermal output of the unit. Use EPA Method 19 in appendix A–7 of this part to calculate the SO_2 emissions rate in lb/MMBtu. Then, use Equations 11 and, if necessary, 12 and 13 of this subpart in § 60.4372 to calculate the SO_2 emissions rate in lb/MWh.

Definitions

§ 60.4420 What definitions apply to this subpart?

As used in this subpart, all terms not defined herein will have the meaning given them in the Clean Air Act and in subpart A (General Provisions) of this part.

Affirmative defense means, in the context of an enforcement proceeding, a response or defense put forward by a defendant, regarding which the defendant has the burden of proof, and the merits of which are independently and objectively evaluated in a judicial or administrative proceeding.

Base load rating means 100 percent of the manufacturer's design heat input capacity of the combustion turbine engine at ISO conditions using the higher heating value of the fuel.

Biogas means gas produced by the anaerobic digestion or fermentation of organic matter including manure, sewage sludge, municipal solid waste, biodegradable waste, or any other biodegradable feedstock, under anaerobic conditions. Biogas is comprised primarily of methane and CO_2.

Byproduct means any liquid or gaseous substance produced at chemical manufacturing plants, petroleum refineries, or pulp and paper mills (except natural gas and fuel oil) and combusted in a stationary combustion

turbine. Gaseous substances with CO_2 levels greater than 50 percent or carbon monoxide levels greater than 10 percent are not byproduct.

Combined cycle combustion turbine means any stationary combustion turbine which recovers heat from the combustion turbine engine exhaust gases to generate steam that is used exclusively to create additional power output in a steam turbine.

Combined heat and power (CHP) combustion turbine means any stationary combustion turbine which recovers heat from the combustion turbine engine exhaust gases to heat water or another medium, generate steam for useful purposes other than exclusively for additional electric generation, or directly uses the heat in the exhaust gases for a useful purpose.

Combustion turbine engine means the air compressor, combustor, and turbine sections of a stationary combustion turbine.

Combustion turbine test cell/stand means any apparatus used for testing uninstalled stationary or uninstalled mobile (motive) combustion turbines.

Distillate oil means fuel oil that complies with the specifications for fuel oil numbers 1 or 2, as defined by the American Society for Testing and Materials in ASTM D396 (incorporated by reference, see § 60.17), diesel fuel oil numbers 1 or 2, as defined by the American Society for Testing and Materials in ASTM D975 (incorporated by reference, see § 60.17), kerosine, as defined by the American Society of Testing and Materials in ASTM D3699 (incorporated by reference, see § 60.17), biodiesel as defined by the American Society of Testing and Materials in ASTM D6751 (incorporated by reference, see § 60.17), or biodiesel blends as defined by the American Society of Testing and Materials in ASTM D7467 (incorporated by reference, see § 60.17).

Dry standard cubic foot (dscf) means the quantity of gas, free of uncombined water, that would occupy a volume of 1 cubic foot at 293 Kelvin (20.0 °C) and 101.325 kPa of pressure.

Duct burner means a device that combusts fuel and that is placed in the exhaust duct from another source, such as a stationary combustion turbine, internal combustion engine, kiln, etc., to allow the firing of additional fuel to heat the exhaust gases.

Emergency combustion turbine means any stationary combustion turbine which operates in an emergency situation. Examples include stationary combustion turbines used to produce power for critical networks or equipment, including power supplied to portions of a facility, when electric power from the local utility is interrupted, or stationary combustion turbines used to pump water in the case of fire or flood, etc. Emergency stationary combustion turbines do not include stationary combustion turbines used as peaking units at electric utilities or stationary combustion turbines at industrial facilities that typically operate at low capacity factors. Emergency combustion turbines may be operated for maintenance checks and readiness testing to retain their status as emergency combustion turbines, provided that the tests are required by the manufacturer, the vendor, or the insurance company associated with the turbine. Required testing of such units should be minimized, but there is no time limit on the use of emergency combustion turbines.

Excess emissions means a specified averaging period over which either (1) the NO_X or SO_2 emissions rate are higher than the applicable emissions standard in § 60.4320 or § 60.4330; (2) the total sulfur content of the fuel being combusted in the affected facility or the SO_2 emissions exceeds the standard specified in § 60.4330; or (3) the recorded value of a particular monitored parameter, including ration of water or steam to fuel, is outside the acceptable range specified in the parameter monitoring plan for the affected unit.

Federally enforceable means all limitations and conditions that are enforceable by the Administrator or delegated authority, including the requirements of 40 CFR parts 60 and 61, requirements within any applicable State Implementation Plan, and any permit requirements established under 40 CFR 52.21 or under 40 CFR 51.18 and 51.24.

Fuel oil means a fluid mixture of hydrocarbons that maintains a liquid state at ISO conditions. Additionally, fuel oil must meet the definition of either distillate oil or residual oil as defined by the American Society for Testing and Materials in ASTM D396 (incorporated by reference, see § 60.17) or diesel fuel as defined by the American Society for Testing and Materials in ASTM D975 (incorporated by reference, see § 60.17).

Gross useful energy output means:

(1) For simple cycle and combined cycle combustion turbines, the gross useful work performed is the gross electrical or direct mechanical output from both the combustion turbine engine and any associated steam turbine(s).

(2) For a CHP combustion turbine, the gross useful work performed is the gross electrical or direct mechanical output from both the combustion turbine engine and any associated steam turbine(s) plus any useful thermal output measured relative to ISO conditions that is not used to generate additional electrical or mechanical output or to enhance the performance of the unit (*i.e.,* steam delivered to an industrial process).

(3) For a CHP combustion turbine where at least 20.0 percent of the total gross useful energy output consists of electric or direct mechanical output and 20.0 percent of the total gross useful energy output consists of useful thermal output on an annual basis, the gross useful work performed is the gross electrical or direct mechanical output from both the combustion turbine engine and any associated steam turbine(s) divided by 0.95 plus any useful thermal output measured relative to ISO conditions that is not used to generate additional electrical or mechanical output or to enhance the performance of the unit (*i.e.,* steam delivered to an industrial process).

Heat recovery steam generating unit (HRSG) means a unit where the hot exhaust gases from the combustion turbine engine are routed in order to extract heat from the gases and generate useful output. Heat recovery steam generating units can be used with or without duct burners.

Integrated gasification combined cycle electric utility steam generating unit (IGCC) means an electric utility steam generating unit that burns solid-derived fuels in a combined-cycle combustion turbine. No solid fuel is directly combusted in the unit during operation.

ISO conditions means 288 Kelvin (15 °C), 60 percent relative humidity and 101.325 kilopascals (kPa) pressure.

Lean premix stationary combustion turbine means any stationary combustion turbine where the air and fuel are thoroughly mixed to form a lean mixture before delivery to the combustor. Mixing may occur before or in the combustion chamber. A lean premixed turbine may operate in diffusion flame mode during operating conditions such as startup and shutdown, extreme ambient temperature, or low or transient load.

Low-Btu gas means biogas or any gas with a heating value of less than 26 megajoules per standard cubic meter (MJ/scm) (700 Btu/scf).

Natural gas means a fluid mixture of hydrocarbons, composed of at least 70 percent methane by volume or that has a gross calorific value between 35 and 41 MJ/scm (950 and 1,100 Btu/scf), that maintains a gaseous state under ISO conditions. In addition, natural gas

contains 460 mg/scm (20.0 gr/100 scf) or less of total sulfur. Finally, natural gas does not include any gaseous fuel produced in a process which might result in highly variable heating value.

Noncontinental area means Guam, American Samoa, the Northern Mariana Islands, or offshore platforms.

Offshore turbine means a stationary combustion turbine located on a platform in an ocean.

Operating day means a 24-hour period between 12 midnight and the following midnight during which any fuel is combusted at any time in the unit. It is not necessary for fuel to be combusted continuously for the entire 24-hour period.

Operating hour means a clock hour during which any fuel is combusted in the affected unit. If the unit combusts fuel for the entire clock hour, it is considered to be a full operating hour. If the unit combusts fuel for only part of the clock hour, it is considered to be a partial operating hour.

Out-of-control period means any period beginning with the quadrant corresponding to the completion of a daily calibration error, linearity check, or quality assurance audit that indicates that the instrument is not measuring and recording within the applicable performance specifications and ending with the quadrant corresponding to the completion of an additional calibration error, linearity check, or quality assurance audit following corrective action that demonstrates that the instrument is measuring and recording within the applicable performance specifications.

Simple cycle combustion turbine means any stationary combustion turbine which does not recover heat from the combustion turbine engine exhaust gases for purposes other than enhancing the performance of the stationary combustion turbine itself.

Solid fuel means any fuel that has a definite shape and volume, has no tendency to flow or disperse under moderate stress, and is not liquid or gaseous at ISO conditions. This includes, but is not limited to, coal, biomass, and pulverized solid fuels.

Stationary combustion turbine means all equipment, including but not limited to the combustion turbine engine, the fuel, air, lubrication and exhaust gas systems, control systems, heat recovery system, steam turbine, fuel compressor, heater, and/or pump, post-combustion emission control technology, and any ancillary components and sub-components. Stationary means that the combustion turbine is not self propelled or intended to be propelled while performing its function. It may, however, be mounted on a vehicle for portability.

Standard cubic foot (scf) means the quantity of gas that would occupy a volume of 1 cubic foot at 293 Kelvin (20.0 °C) and 101.325 kPa of pressure.

Standard cubic meter (scm) means the quantity of gas that would occupy a volume of 1 cubic meter at 293 Kelvin (20.0 °C) and 101.325 kPa of pressure.

Turbine tuning means planned maintenance of a lean premix combustion turbine engine involving adjustment of the operating configuration to maintain proper combustion dynamics. Turbine tuning is limited to 30 hours annually.

Useful thermal output means the thermal energy made available for processes and applications other than electrical or mechanical generation or to enhance the performance of the stationary combustion turbine (i.e., the thermal energy made available for use in any industrial or commercial process or used in any heating application). Useful thermal output for this subpart is measured relative to the enthalpy of the thermal output in its most prevalent form at ISO conditions (e.g., liquid water).

TABLE 1 TO SUBPART KKKK OF PART 60—NITROGEN OXIDE EMISSION STANDARDS FOR STATIONARY COMBUSTION TURBINES

[All numerical values have two significant figures]

Combustion turbine type	Combustion turbine heat input at base load rating (HHV)	NO_X emissions standard	Alternate NO_X emissions standard in ppm at 15 percent O_2
New turbine firing natural gas, electric generating	≤ 15 MW (50 MMBtu/h)	67 ng/J (0.16 lb/MMBtu) heat input or 290 ng/J of gross energy output (2.3 lb/MWh).	42
New turbine firing natural gas, mechanical drive	≤ 15 MW (50 MMBtu/h)	160 ng/J (0.37 lb/MMBtu) heat input or 690 ng/J of gross energy output (5.5 lb/MWh).	100
New turbine firing natural gas	> 15 MW (50 MMBtu/h) and ≤ 250 MW (850 MMBtu/h).	40 ng/J (0.093 lb/MMBtu) heat input or 150 ng/J of gross energy output (1.2 lb/MWh).	25
New, modified, or reconstructed turbine firing natural gas.	> 250 MW (850 MMBtuh).	24 ng/J (0.056 lb/MMBtu) heat input or 54 ng/J of gross energy output (0.43 lb/MWh).	15
New turbine firing fuels other than natural gas, electric generating.	≤ 15 MW (50 MMBtu/h)	160 ng/J (0.38 lb/MMBtu) heat input or 710 ng/J of gross energy output (5.6 lb/MWh).	96
New turbine firing fuels other than natural gas, mechanical drive.	≤ 15 MW (50 MMBtu/h)	250 ng/J (0.59 lb/MMBtu) heat input or 1,100 ng/J of gross energy output (8.7 lb/MWh).	150
New turbine firing fuels other than natural gas	> 15 MW (50 MMBtu/h) and ≤ 250 MW (850 MMBtu/h).	120 ng/J (0.29 lb/MMBtu) heat input or 470 ng/J of gross energy output (3.7 lb/MWh).	74
New, modified, or reconstructed turbine firing fuels other than natural gas.	> 250 MW (850 MMBtu/h).	73 ng/J (0.17 lb/MMBtu) heat input or 160 ng/J of gross energy output (1.3 lb/MWh).	42
Modified or reconstructed turbine	≤ 15 MW (50 MMBtu/h)	250 ng/J (0.59 lb/MMBtu) heat input or 1,100 ng/J of gross energy output (8.7 lb/MWh).	150
Modified or reconstructed turbine firing natural gas.	> 15 MW (50 MMBtu/h) and ≤ 250 MW (850 MMBtu/h).	67 ng/J (0.16 lb/MMBtu) heat input or 250 ng/J of gross energy output (2.0 lb/MWh).	42
Modified or reconstructed turbine firing fuels other than natural gas.	> 15 MW (50 MMBtu/h) and ≤ 250 MW (850 MMBtu/h).	160 ng/J (0.38 lb/MMBtu) heat input or 600 ng/J of gross energy output (4.8 lb/MWh).	96

TABLE 1 TO SUBPART KKKK OF PART 60—NITROGEN OXIDE EMISSION STANDARDS FOR STATIONARY COMBUSTION TURBINES—Continued

[All numerical values have two significant figures]

Combustion turbine type	Combustion turbine heat input at base load rating (HHV)	NO_X emissions standard	Alternate NO_X emissions standard in ppm at 15 percent O_2
Turbines located north of the Arctic Circle (latitude 66.5 degrees north), turbines operating at less than 75 percent of the base load rating, turbines operated during periods of turbine tuning, startup, or shutdown, modified and reconstructed offshore turbines, or turbines operating at temperatures less than minus 17 °C.	≤ 100 MW (340 MMBtu/h).	250 ng/J (0.59 lb/MMBtu) heat input or 1,100 ng/J of gross energy output (8.7 lb/MWh).	150
Turbines located north of the Arctic Circle (latitude 66.5 degrees north), turbines operating at less than 75 percent of the base load rating, turbines operated during periods of turbine tuning, startup, or shutdown, modified and reconstructed offshore turbines, or turbines operating at temperatures less than minus 17 °C.	> 100 MW (340 MMBtu/h).	160 ng/J (0.38 lb/MMBtu) heat input or 610 ng/J of gross energy output (4.8 lb/MWh).	96
Heat recovery units operating independent of the combustion turbine engine.	All sizes	86 ng/J (0.20 lb/MMBtu) heat input or 110 ng/J of gross energy output (0.90 lb/MWh).	50

[FR Doc. 2012–20524 Filed 8–28–12; 8:45 am]

BILLING CODE 6560–50–P

FEDERAL REGISTER

Vol. 77 Wednesday,

No. 168 August 29, 2012

Part IV

The President

Proclamation 8848—Women's Equality Day, 2012

Federal Register
Vol. 77, No. 168
Wednesday, August 29, 2012

Presidential Documents

Title 3—

The President

Proclamation 8848 of August 24, 2012

Women's Equality Day, 2012

By the President of the United States of America

A Proclamation

On Women's Equality Day, we mark the anniversary of our Constitution's 19th Amendment, which secured the right to vote for America's women. The product of profound struggle and fierce hope, the 19th Amendment reaffirmed what we have always known: that America is a place where anything is possible and where each of us is entitled to the full pursuit of our own happiness. We also know that the defiant, can-do spirit that moved millions to seek suffrage is what runs through the veins of American history. It remains the wellspring of all our progress. And nearly a century after the battle for women's franchise was won, a new generation of young women stands ready to carry that spirit forward and bring us closer to a world where there are no limits on how big our children can dream or how high they can reach.

To keep our Nation moving ahead, all Americans—men and women—must be able to help provide for their families and contribute fully to our economy. That is why I have made supporting the needs and aspirations of women and girls a top priority for my Administration. From signing the Lilly Ledbetter Fair Pay Act into law and creating the White House Council on Women and Girls to combatting sexual assault and promoting women's economic and political empowerment at home and abroad, we have worked to ensure women have the opportunities they need and deserve at every stage of their lives. As women around the world continue to fight for their seat at the table, my Administration will keep their interests at the core of our policy decisions—and we will join them every step of the way.

Today, women are nearly 50 percent of our workforce, the majority of students in our colleges and graduate schools, and a growing number of breadwinners in their families. From business to medicine to our military, women are leading the fields that were closed off to them only decades ago. We owe that legacy of progress to our mothers and aunts, grandmothers and great-grandmothers—women who proved not only that opportunity and equality do not come without a fight, but also that they are possible. Even with the gains we have made, we still have work to do. As we mark this 92nd anniversary of the 19th Amendment, let us reflect on how far we have come toward fully realizing the basic freedoms enshrined in our founding documents, rededicate ourselves to closing the gaps that remain, and continue to widen the doors of opportunity for all of our daughters and sons.

NOW, THEREFORE, I, BARACK OBAMA, President of the United States of America, by virtue of the authority vested in me by the Constitution and the laws of the United States, do hereby proclaim August 26, 2012, as Women's Equality Day. I call upon the people of the United States to celebrate the achievements of women and recommit to realizing gender equality in this country.

IN WITNESS WHEREOF, I have hereunto set my hand this twenty-fourth day of August, in the year of our Lord two thousand twelve, and of the Independence of the United States of America the two hundred and thirty-seventh.

[FR Doc. 2012–21508
Filed 8–28–12; 11:15 am]
Billing code 3295–F2–P

Reader Aids

Federal Register

Vol. 77, No. 168

Wednesday, August 29, 2012

CUSTOMER SERVICE AND INFORMATION

Federal Register/Code of Federal Regulations	
General Information, indexes and other finding aids	**202–741–6000**
Laws	**741–6000**
Presidential Documents	
Executive orders and proclamations	**741–6000**
The United States Government Manual	**741–6000**
Other Services	
Electronic and on-line services (voice)	**741–6020**
Privacy Act Compilation	**741–6064**
Public Laws Update Service (numbers, dates, etc.)	**741–6043**
TTY for the deaf-and-hard-of-hearing	**741–6086**

ELECTRONIC RESEARCH

World Wide Web

Full text of the daily Federal Register, CFR and other publications is located at: **www.fdsys.gov.**

Federal Register information and research tools, including Public Inspection List, indexes, and links to GPO Access are located at: **www.ofr.gov.**

E-mail

FEDREGTOC-L (Federal Register Table of Contents LISTSERV) is an open e-mail service that provides subscribers with a digital form of the Federal Register Table of Contents. The digital form of the Federal Register Table of Contents includes HTML and PDF links to the full text of each document.

To join or leave, go to **http://listserv.access.gpo.gov** and select *Online mailing list archives, FEDREGTOC-L, Join or leave the list (or change settings);* then follow the instructions.

PENS (Public Law Electronic Notification Service) is an e-mail service that notifies subscribers of recently enacted laws.

To subscribe, go to **http://listserv.gsa.gov/archives/publaws-l.html** and select *Join or leave the list (or change settings);* then follow the instructions.

FEDREGTOC-L and **PENS** are mailing lists only. We cannot respond to specific inquiries.

Reference questions. Send questions and comments about the Federal Register system to: **fedreg.info@nara.gov**

The Federal Register staff cannot interpret specific documents or regulations.

Reminders. Effective January 1, 2009, the Reminders, including Rules Going Into Effect and Comments Due Next Week, no longer appear in the Reader Aids section of the Federal Register. This information can be found online at **http://www.regulations.gov.**

CFR Checklist. Effective January 1, 2009, the CFR Checklist no longer appears in the Federal Register. This information can be found online at **http://bookstore.gpo.gov/.**

FEDERAL REGISTER PAGES AND DATE, AUGUST

45469–45894 1
45895–46256 2
46257–46600 3
46601–46928 6
46929–47266 7
47267–47510 8
47511–47766 9
47767–48044 10
48045–48418 13
48419–48854 14
48855–49344 15
49345–49700 16
49701–49990 17
49991–50370 20
50371–50560 21
50561–50902 22
50903–51458 23
51459–51680 24
51681–51866 27
51867–52200 28
52201–52586 29

CFR PARTS AFFECTED DURING AUGUST

At the end of each month the Office of the Federal Register publishes separately a List of CFR Sections Affected (LSA), which lists parts and sections affected by documents published since the revision date of each title.

3 CFR

Proclamations:
8844 45477
8845 45895
8846 47763
8847 47765
8848 52585

Executive Orders:
13621 45471
13622 45897
13623 49345

Administrative Orders:
Presidential Determinations:
No. 2012–13 of August 10, 2012 50557
Notices:
Notice of July 17, 2012 (Correction) 45469
Notice of August 15, 2012 49699

5 CFR
7501 46601

Proposed Rules:
Ch. XXII 47328

6 CFR
5 ..... 40000, 47767

7 CFR
6 51681
59 50561
205 45903
253 50903
272 48045
273 48045
782 51459
932 51684
999 51686
1033 51693
1205 51867

Proposed Rules:
278 48461
279 48461
319 46339

8 CFR

Proposed Rules:
235 47558

10 CFR
2 ..... 46562, 51880
11 46257
12 46562
25 46257
51 46562
52 51880
54 46562
61 46562
430 49701
431 49701

Proposed Rules:
61 48107
Ch. II 47328
429 ..... 49064, 49739, 51943
430 ..... 48108, 49064, 49739, 51943
Ch. III 47328
Ch. X 47328
1708 51943

12 CFR
234 45907
235 46258
1005 50244
1072 46606

Proposed Rules:
1002 50390
1005 50404
1024 ..... 49090, 51116
1026 ..... 49090, 51116

13 CFR
Ch. I 46806, 46855
121 49991

14 CFR
21 45921
27 ..... 48058, 50576
29 50576
39 ..... 46929, 46932, 46935, 46937, 46940, 46943, 46946, 47267, 47273, 47275, 47277, 48419, 48420, 48423, 48425, 48427, 49702, 49705, 49708, 49710, 50371, 50577, 50582, 51459, 51462, 51695, 51892, 52201, 52203, 52205, 52212
71 ..... 46282, 46283, 46284, 48060, 49712, 49719, 49720, 50907, 51464, 52217, 52218, 52219
95 50909
97 ..... 45922, 45925, 50012, 50014, 51894, 51896
400 50584

Proposed Rules:
Ch. I 51948
25 51944
39 ..... 45513, 45518, 45979, 45981, 46340, 46343, 47329, 47330, 47563, 47568, 47570, 48110, 48469, 48473, 49386, 49389, 49394, 49396, 50054, 50407, 50411, 50414, 50644, 50954, 51717, 51720, 51722, 51724, 51729, 51946, 52264, 52265, 52270
43 49740
71 ..... 45983, 45984, 45985, 45987, 48476, 49399, 49400, 50417, 50419, 50646, 50647, 50648, 50656
91 ..... 49740, 50420

97 50420
121 50420
125 50420
129 50420
135 50420
145 49740
400 50956
401 50956

15 CFR

774 ....45927, 46948, 48429
801 49721
Proposed Rules:
90 47783
922 46985
1400 46346

16 CFR

310 51697
1221 52220
Proposed Rules:
23 50056
312 46643
801 50057
Ch. II 51731
1221 52272

17 CFR

1 48208
3 51898
43 48060
230 48208
240 ....48208, 50016
241 48208
Proposed Rules:
39 50425
50 47170

18 CFR

Proposed Rules:
35 46986

19 CFR

12 45479
Proposed Rules:
12 48918
163 48918
178 48918
Ch. II 47572
351 50963

21 CFR

16 50372
20 50589
21 51910
118 50372
172 52228
500 50591
510 ....46612, 47511
520 47511
522 46612
524 ....46612, 47511
807 45927
Proposed Rules:
Ch. I 48491
21 51949

24 CFR

25 51465
30 51465
201 51465
202 51465
203 51465
206 51465

25 CFR

502 47513
537 47514
571 47516
573 47517

26 CFR

1 ....45480, 50373
Proposed Rules:
1 ....45520, 46987, 51496
40 47573
46 47573
51 ....46653, 48111
301 48922

28 CFR

0 51698

29 CFR

1614 51469
1910 46948
1926 ....46948, 49722
2700 48429
2701 48429
2702 48429
2704 48429
2705 48429
2706 48429
4022 48855
Proposed Rules:
1 47787
1926 49741

30 CFR

250 50856
Proposed Rules:
935 46346

32 CFR

Proposed Rules:
323 46653

33 CFR

100 ....46285, 47279, 47519, 47520, 47522, 50373
110 50914
117 ....46285, 46286, 47282, 47524, 47525, 50016, 50017, 50376, 51470, 51699, 51700
165 ....45488, 45490, 46285, 46287, 46613, 47282, 47284, 47525, 48431, 48856, 49349, 49351, 49730, 50017, 50018, 50019, 50373, 50593, 50916, 50919, 50921, 50923, 50926, 50929, 51471, 51473, 51475, 51912
Proposed Rules:
83 52176
84 52176
85 52176
86 52176
87 52176
88 52176
100 51951
110 45988
117 ....47787, 47789, 47792
161 45911
165 ....45911, 46349, 47331, 47334, 49401, 50062, 50065, 50444

34 CFR

Ch. III 45991, 47496
Proposed Rules:
Ch. III 46658

36 CFR

Proposed Rules:
7 51733
218 47337
1192 50068

37 CFR

1 ....46615, 48612, 48776, 48828, 49354
3 ....48612, 48776
5 ....46615, 48776
6 47528
10 ....46615, 48776
11 46615
41 ....46615, 48776
42 ....48612, 48680, 48734, 48756
90 48612

38 CFR

Proposed Rules:
3 47795

39 CFR

20 50932
241 46950

40 CFR

1 46289
9 ....46289, 48858
49 ....48878, 51620
52 ....45492, 45949, 45954, 45956, 45958, 45962, 45965, 46952, 46960, 46961, 47530, 47533, 47535, 47536, 48061, 48062, 50021, 50033, 50378, 50595, 50602, 50608, 50611, 50936, 51915, 51930, 52232, 52233
60 ....48433, 49490
63 ....45967, 49490
70 52233
81 ....46295, 48062, 50033
82 47768
85 51701
86 51701
98 ....48072, 51477
131 46298
150 46289
164 46289
174 47287
178 46289
179 46289
180 ....45495, 45498, 46304, 46306, 47291, 47296, 47539, 48899, 48902, 48907, 49732, 50613, 50617, 52236, 52240, 52246
268 50622
271 ....47302, 47779
272 46964
300 ....45968, 50038, 50044
600 51701
700 46289
712 46289
716 46289
720 46289
721 48858
723 46289
725 46289
761 46289
763 46289
766 46289
795 46289
796 46289
799 46289
1033 51701
1036 51701
1037 51701
1039 51701
1065 51701
1066 51701
1068 51701
Proposed Rules:
49 48923
52 ....45523, 45527, 45530, 45532, 45992, 46008, 46352, 46361, 46664, 46672, 46990, 47573, 47581, 49308, 49404, 50446, 50651, 50660, 50964, 50966, 50969, 50973, 51739, 52277
60 ....46371, 52554
63 46371
152 47351
158 47351
161 47351
168 47351
180 ....45535, 50661
271 47797
272 46994
300 ....46009, 50069, 50070
721 48924

41 CFR

Proposed Rules:
102–37 50447

44 CFR

64 46968
65 50626
67 ....46972, 46980, 49360, 49367, 49373, 49379
Proposed Rules:
67 ....46994, 50665, 50667, 50668, 51743, 51744, 51745

45 CFR

5b 51910, 51933
162 48008
Proposed Rules:
5b 51949, 51954
1606 46995
1618 46995
1623 46995

46 CFR

2 47544
515 51935
Proposed Rules:
401 ....45539, 47582

47 CFR

0 48090
1 ....46307, 50628
15 48097
25 ....50049, 50628
51 48448
54 48453
73 ....46631, 50053, 50630
79 ....46632, 48102
90 45503
Proposed Rules:
1 49749
2 45558
54 52279
73 ....50071, 52292
76 50071
90 45558

48 CFR

201 52252

209 52253
210 52253
211 52254
212 ....52252, 52254
215 52253
217 52253
230 52253
237 52253
242 52258
245 52253
252 ....52253, 52254
3001 50631
3002 50631
3003 50631
3004 50631
3005 50631
3006 50631
3012 50631
3018 50631
3022 50631
3023 50631
3033 50631
3035 50631
3036 50631
3042 50631
3045 50631
3052 50631
3053 50631

Proposed Rules:

4 51496
7 51496
12 51496
19 47797
35 47797
42 51496
52 51496
204 51957
Ch. 10 50454
3016 50449
3052 50449

49 CFR

1 49764
369 51705
375 ....48460, 51706
383 51706
385 49384
390 51706
393 46633
395 46640
563 47552
571 ....48105, 51650
580 50381
594 50637

Proposed Rules:

171 49168
172 49168
173 49168
175 49168
176 49168
178 49168
190 48112
192 48112
193 48112
195 48112
199 48112
214 50324
383 46010
535 51499
544 50671
580 50071
563 48492
567 46677

50 CFR

17 ....45870, 46158, 48368
218 50290
223 48108
300 ....51709, 52259
622 ....50388, 51939, 52261
635 ....47303, 52259
640 50642
648 ....48915, 51854, 51858, 52262
660 ....45508, 47318, 47322, 50952
679 ....46338, 46641, 48916, 50389

Proposed Rules:

17 ....47003, 47011, 47352, 47583, 47587, 48934, 49602, 49894, 50214, 50768, 51958, 52293, 52301
20 ....49680, 49868
223 45571
224 45571
424 51503
622 50672
665 46014
679 47356

LIST OF PUBLIC LAWS

This is a continuing list of public bills from the current session of Congress which have become Federal laws. It may be used in conjunction with "P L U S" (Public Laws Update Service) on 202–741–6043. This list is also available online at *http://www.archives.gov/federal-register/laws*.

The text of laws is not published in the **Federal Register** but may be ordered in "slip law" (individual pamphlet) form from the Superintendent of Documents, U.S. Government Printing Office, Washington, DC 20402 (phone, 202–512–1808). The text will also be made available on the Internet from GPO's Federal Digital System (FDsys) at *http://www.gpo.gov/fdsys*. Some laws may not yet be available.

H.R. 1402/P.L. 112–170

To authorize the Architect of the Capitol to establish battery recharging stations for privately owned vehicles in parking areas under the jurisdiction of the House of Representatives at no net cost to the Federal Government. (Aug. 16, 2012; 126 Stat. 1303)

H.R. 3670/P.L. 112–171

To require the Transportation Security Administration to comply with the Uniformed Services Employment and Reemployment Rights Act. (Aug. 16, 2012; 126 Stat. 1306)

H.R. 4240/P.L. 112–172

Ambassador James R. Lilley and Congressman Stephen J. Solarz North Korea Human Rights Reauthorization Act of 2012 (Aug. 16, 2012; 126 Stat. 1307)

S. 3510/P.L. 112–173

To prevent harm to the national security or endangering the military officers and civilian employees to whom internet publication of certain information applies, and for other purposes. (Aug. 16, 2012; 126 Stat. 1310)

Last List August 16, 2012

Public Laws Electronic Notification Service (PENS)

PENS is a free electronic mail notification service of newly enacted public laws. To subscribe, go to *http://listserv.gsa.gov/archives/publaws-l.html*

Note: This service is strictly for E-mail notification of new laws. The text of laws is not available through this service. **PENS** cannot respond to specific inquiries sent to this address.