(2) Do not install a GCU P/N 51530–021–EI with no MOD, MOD A, or MOD B on any helicopter.

(f) Alternative Methods of Compliance (AMOCs)

(1) The Manager, Safety Management Group, FAA, may approve AMOCs for this AD. Send your proposal to: George Schwab, Aviation Safety Engineer, FAA, Rotorcraft Directorate, Safety Management Group, 2601 Meacham Blvd., Fort Worth, Texas 76137; telephone (817) 222–5114; email *george.schwab@faa.gov.*

(2) For operations conducted under a 14 CFR part 119 operating certificate or under 14 CFR part 91, subpart K, we suggest that you notify your principal inspector, or lacking a principal inspector, the manager of the local flight standards district office or certificate holding district office, before operating any aircraft complying with this AD through an AMOC.

(g) Additional Information

(1) Eurocopter Deutschland GmbH Alert Service Bulletin MBB–BK117 C–2–24A–010 Revision 2, dated September 14, 2011, which is not incorporated by reference, contains additional information about the subject of this AD.

(2) For service information identified in this AD, contact American Eurocopter Corporation, 2701 N. Forum Drive, Grand Prairie, TX 75052, telephone (972) 641–0000 or (800) 232–0323, fax (972) 641–3775, or at *http://www.eurocopter.com/techpub.* You may review a copy of the service information at the FAA, Office of the Regional Counsel, Southwest Region, 2601 Meacham Blvd., Room 663, Fort Worth, Texas 76137.

(3) The subject of this AD is addressed in European Aviation Safety Agency AD No. 2011–0149R1, dated September 30, 2011.

(h) Subject

Joint Aircraft Service Component (JASC) Code: 2436: DC Generator Control Unit.

Issued in Fort Worth, Texas, on October 30, 2012.

Kim Smith,

Directorate Manager, Rotorcraft Directorate, Aircraft Certification Service.

[FR Doc. 2012–28039 Filed 11–19–12; 8:45 am]

BILLING CODE 4910–13–P

DEPARTMENT OF TRANSPORTATION

Federal Aviation Administration

14 CFR Part 39

[Docket No. FAA–2012–1188; Directorate Identifier 2012–SW–049–AD; Amendment 39–17254; AD 2012–10–53]

RIN 2120–AA64

Airworthiness Directives; Eurocopter Deutschland GmbH Helicopters

AGENCY: Federal Aviation Administration (FAA), Department of Transportation (DOT).

ACTION: Final rule; request for comments.

SUMMARY: We are adopting a new airworthiness directive (AD) for Eurocopter Deutschland GmbH (ECD) Model EC135 P1, EC135 P2, EC135 P2+, EC135 T1, EC135 T2, and EC135 T2+ helicopters. This is the **Federal Register** publication of an Emergency AD (EAD) that was previously sent to all known owners and operators of these helicopters. That EAD superseded an earlier related EAD. This AD requires, before further flight and at specified intervals, checking and inspecting the upper and lower main rotor hub (MRH) shaft flanges for a crack, and inspecting the lower hub-shaft flange bolt attachment areas for a crack. This AD is prompted by three reported incidents of cracking on the lower hub-shaft flanges of EC135 model helicopters. These actions are intended to detect a crack on the hub-shaft flange, which if not corrected could result in failure of the MRH and subsequent loss of control of the helicopter.

DATES: This AD becomes effective December 5, 2012 to all persons except those persons to whom it was made immediately effective by Emergency AD No. 2012–10–53, issued on May 18, 2012, which contained the requirements of this AD.

We must receive comments on this AD by January 22, 2013.

ADDRESSES: You may send comments by any of the following methods:

- *Federal eRulemaking Docket:* Go to *http://www.regulations.gov.* Follow the online instructions for sending your comments electronically.
- *Fax:* 202–493–2251.
- *Mail:* Send comments to the U.S. Department of Transportation, Docket Operations, M–30, West Building Ground Floor, Room W12–140, 1200 New Jersey Avenue SE., Washington, DC 20590–0001.
- *Hand Delivery:* Deliver to the ''Mail'' address between 9 a.m. and 5 p.m., Monday through Friday, except Federal holidays.

Examining the AD Docket

You may examine the AD docket on the Internet at *http://www.regulations.gov* or in person at the Docket Operations Office between 9 a.m. and 5 p.m., Monday through Friday, except Federal holidays. The AD docket contains this AD, the economic evaluation, any comments received, and other information. The street address for the Docket Operations Office (telephone 800–647–5527) is in the **ADDRESSES** section. Comments will be available in the AD docket shortly after receipt.

For service information identified in this AD, contact American Eurocopter Corporation, 2701 N. Forum Drive, Grand Prairie, Texas 75052; telephone (972) 641–0000 or (800) 232–0323; fax (972) 641–3775; or at *http://www.eurocopter.com/techpub.* You may review the referenced service information at the FAA, Office of the Regional Counsel, Southwest Region, 2601 Meacham Blvd., Room 663, Fort Worth, Texas 76137.

FOR FURTHER INFORMATION CONTACT: Gary Roach, Aviation Safety Engineer, Regulations and Policy Group, Rotorcraft Directorate, FAA, 2601 Meacham Blvd., Fort Worth, Texas 76137; telephone (817) 222–5110; email *gary.b.roach@faa.gov.*

SUPPLEMENTARY INFORMATION:

Comments Invited

This AD is a final rule that involves requirements affecting flight safety, and we did not provide you with notice and an opportunity to provide your comments prior to it becoming effective. However, we invite you to participate in this rulemaking by submitting written comments, data, or views. We also invite comments relating to the economic, environmental, energy, or federalism impacts that resulted from adopting this AD. The most helpful comments reference a specific portion of the AD, explain the reason for any recommended change, and include supporting data. To ensure the docket does not contain duplicate comments, commenters should send only one copy of written comments, or if comments are filed electronically, commenters should submit them only one time. We will file in the docket all comments that we receive, as well as a report summarizing each substantive public contact with FAA personnel concerning this rulemaking during the comment period. We will consider all the comments we receive and may conduct additional rulemaking based on those comments.

Discussion

On May 15, 2012, we issued Emergency AD 2012–10–51 for the ECD Model EC135 series helicopters to detect a crack on the MRH shaft flange. Emergency AD 2012–10–51 required a pilot check of the lower MRH shaft flange for a crack or deformed blade attachment bolt safety pins before the first flight of each day, inspecting the upper and lower MRH shaft flanges for a crack within 5 hours time-in-service (TIS), and replacing the MRH shaft if there is a crack.

After we issued Emergency AD 2012–10–51, the European Aviation Safety

Agency (EASA), which is the Technical Agent for the Member States of the European Union, issued EASA AD No. 2012–0085–E, dated May 17, 2012 (2012–0085–E), which superseded EASA AD No. 2012–0041R1, dated March 15, 2012 (2012–0041R1), to correct an unsafe condition for the ECD Model EC 135 series helicopters. EASA advises that since issuing 2012–0041R1, further cracks have been detected on two other helicopters during the pre-flight checks. These are the same two cracks that prompted our Emergency AD. However, EASA also states that identification of deformed safety pins may not be sufficient to detect a crack on the MRH shaft flange. ECD is investigating the cause of the cracks and has developed new inspection procedures with further corrective actions. Therefore, we issued superseding Emergency AD 2012–10–53 on May 18, 2012, to detect a crack on the MRH shaft flange, which if not corrected could result in failure of the MRH and subsequent loss of control of the helicopter.

When we issued superseding Emergency AD 2012–10–53, we included additional part-numbered MRH shafts that should have been included in EAD 2012–10–51, changed the daily checks to recurring checks at intervals not to exceed 6 hours TIS, added a 10 hour-TIS recurring inspection on MRH shafts with 400 or more hours TIS, and removed the check of the blade attachment bolt safety pins for deformation.

This is the **Federal Register** publication of Emergency AD 2012–10–53 as Amendment 39–17254; AD 2012–10–53. There are no differences in the regulatory language or requirements between this AD and that Emergency AD as it was previously sent to all known owners and operators of these helicopters.

FAA's Determination

These helicopters have been approved by the aviation authority of Germany and are approved for operation in the United States. Pursuant to our bilateral agreement with Germany, EASA, its technical representative, has notified us of the unsafe condition described in the EASA AD. We are issuing this AD because we evaluated all information provided by EASA and determined the unsafe condition exists and is likely to exist or develop on other helicopters of these same type designs.

Related Service Information

Eurocopter has issued Emergency Alert Service Bulletin EC135–62A–029, Revision 2, dated May 17, 2012 (EC135–62A–029), which describes procedures for conducting a repetitive check of the visible area of the upper and lower MRH shaft flanges and a repetitive inspection of the area of the blade bolts lower MRH shaft flange.

AD Requirements

This AD supersedes Emergency AD 2012–10–51 and requires the following:

- Before further flight, and thereafter at intervals not to exceed 6 hours TIS, checking the lower MRH shaft flange and the visible area of the upper MRH shaft flange for a crack. An owner/operator (pilot) may perform this required visual check and must enter compliance with the applicable paragraph of this AD into the helicopter maintenance records in accordance with 14 CFR 43.9(a)(1)–(4) and 91.417(a)(2)(v). A pilot may perform this check because it involves only looking at the visible area of the MRH shaft flanges and can be performed equally well by a pilot or a mechanic. This check is an exception to our standard maintenance regulations.
- For an MRH shaft with 400 or more hours TIS, within 10 hours TIS, and thereafter at intervals not to exceed 10 hours TIS, removing the rotor-hub cap; inspecting the upper and lower hub-shaft flanges for a crack; removing the blade attachment bolt safety pins, nut, and washer; and inspecting the lower hub-shaft flange bolt attachment areas for a crack.
- If there is a crack, replacing the MRH shaft.

Differences Between This AD and the EASA AD

The EASA AD identifies ECD Alert Service Bulletin EC135–62A–029, Revision 1, dated May 16, 2012. This AD references Revision 2. The EASA AD requires you to report the findings and sending any cracked MRH to ECD, and this AD does not. The EASA AD requires the initial check within 3 days, while this AD requires the check before further flight.

Interim Action

We consider this AD to be an interim action. Eurocopter is currently developing a modification that will address the unsafe condition identified in this AD. Once this modification is developed, approved, and available, we might consider additional rulemaking.

Costs of Compliance

We estimate that this AD will affect 244 helicopters of U.S. Registry. We estimate inspecting the MRH shaft flanges will require 2.5 hours at an average labor rate of $85 per work-hour, for a total cost per helicopter of $212 and a total cost to U.S. operators of $51,850 per inspection cycle. Replacing an MRH shaft will require about 8 hours at an average labor rate of $85 per work-hour, and required parts will cost $55,715, for a total cost per helicopter of $56,395.

FAA's Justification and Determination of the Effective Date

Providing an opportunity for public comments prior to adopting these AD requirements would delay implementing the safety actions needed to correct this known unsafe condition. Therefore, we find that the risk to the flying public justifies waiving notice and comment prior to the adoption of this rule because the required corrective actions must be accomplished before further flight.

Since an unsafe condition exists that requires the immediate adoption of this AD, we determined that notice and opportunity for public comment before issuing this AD are impracticable and that good cause exists for making this amendment effective in less than 30 days.

Authority for This Rulemaking

Title 49 of the United States Code specifies the FAA's authority to issue rules on aviation safety. Subtitle I, section 106, describes the authority of the FAA Administrator. ''Subtitle VII: Aviation Programs,'' describes in more detail the scope of the Agency's authority.

We are issuing this rulemaking under the authority described in ''Subtitle VII, Part A, Subpart III, Section 44701: General requirements.'' Under that section, Congress charges the FAA with promoting safe flight of civil aircraft in air commerce by prescribing regulations for practices, methods, and procedures the Administrator finds necessary for safety in air commerce. This regulation is within the scope of that authority because it addresses an unsafe condition that is likely to exist or develop on products identified in this rulemaking action.

Regulatory Findings

We determined that this AD will not have federalism implications under Executive Order 13132. This AD will not have a substantial direct effect on the States, on the relationship between the national Government and the States, or on the distribution of power and responsibilities among the various levels of government.

For the reasons discussed, I certify that this AD:

1. Is not a ''significant regulatory action'' under Executive Order 12866;

2. Is not a ''significant rule'' under DOT Regulatory Policies and Procedures (44 FR 11034, February 26, 1979);

3. Will not affect intrastate aviation in Alaska to the extent that it justifies making a regulatory distinction; and

4. Will not have a significant economic impact, positive or negative, on a substantial number of small entities under the criteria of the Regulatory Flexibility Act.

We prepared an economic evaluation of the estimated costs to comply with this AD and placed it in the AD docket.

List of Subjects in 14 CFR Part 39

Air transportation, Aircraft, Aviation safety, Incorporation by reference, Safety.

Adoption of the Amendment

Accordingly, under the authority delegated to me by the Administrator, the FAA amends 14 CFR part 39 as follows:

PART 39—AIRWORTHINESS DIRECTIVES

■ 1. The authority citation for part 39 continues to read as follows:

Authority: 49 U.S.C. 106(g), 40113, 44701.

§ 39.13 [Amended]

■ 2. The FAA amends § 39.13 by adding the following new airworthiness directive (AD):

2012–10–53 Eurocopter Deutschland GMBH (ECD): Amendment 39–17254; Docket No. FAA–2012–1188; Directorate Identifier 2012–SW-049–AD.

(a) Applicability

This AD applies to Model EC135 P1, EC135 P2, EC135 P2+, EC135 T1, EC135 T2, and EC135 T2+ helicopters, with a main rotor hub (MRH) shaft, part number (P/N) L623M1006101, L623M1206101, L623M1006102, L623M1206102, L623M1006103, or L623M1206103 installed, certificated in any category.

(b) Unsafe Condition

This AD defines the unsafe condition as a crack in the MRH shaft flange, which could result in failure of the MRH shaft and subsequent loss of control of the helicopter.

(c) Effective Date

This AD becomes effective December 5, 2012 to all persons except those persons to whom it was made immediately effective by Emergency AD No. 2012–10–53, issued on May 18, 2012, which contained the requirements of this AD.

(d) Other Affected ADs

This AD supersedes Emergency AD No. 2012–10–51, dated May 15, 2012.

(e) Compliance

You are responsible for performing each action required by this AD within the specified compliance time.

(f) Required Actions

(1) Before further flight, and thereafter at intervals not to exceed 6 hours time-in-service (TIS), check the MRH shaft lower flange and the visible area of the MRH shaft upper flange for a crack. Figures 1 and 2 to Paragraph (f)(1) of this AD are examples of cracks that have been discovered in the MRH shaft lower flange. The actions required by this paragraph may be performed by the owner/operator (pilot) holding at least a private pilot certificate, and must be entered into the aircraft records showing compliance with this AD in accordance with 14 CFR 43.9 (a)(1)-(4) and 14 CFR 91.417(a)(2)(v). The record must be maintained as required by 14 CFR 91.417, 121.380, or 135.439.

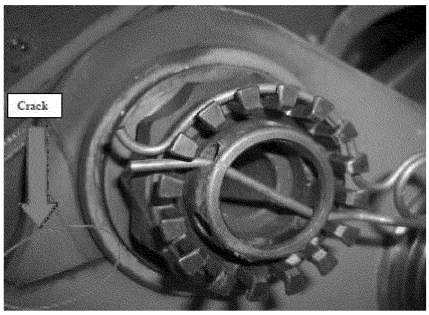

Figure 1 to Paragraph (f)(1)

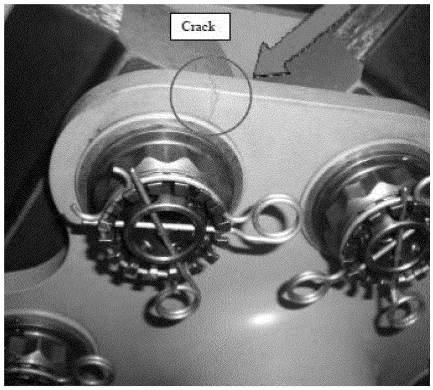

Figure 2 to Paragraph (f)(1)

(2) For MRH shafts with 400 or more hours TIS, within 10 hours TIS, and thereafter at intervals not to exceed 10 hours TIS:

(i) Remove rotor-hub cap.

(ii) Clean the upper and lower MRH shaft flange as depicted in Figure 3 to Paragraph (f)(2)(ii) of this AD and visually inspect for a crack.

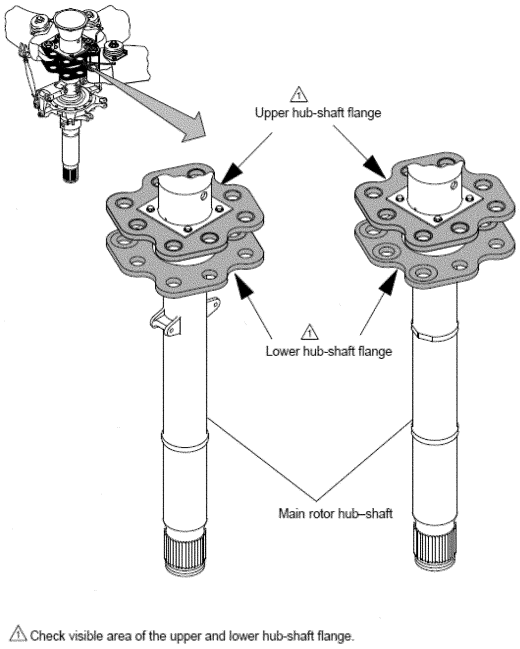

Figure 3 to Paragraph (f)(2)(ii)

(iii) Remove the safety pins and nut from each blade bolt and the washers from the lower MRH shaft flange.

(iv) Clean the blade bolt attachment area.

(v) Using a 10X or higher power magnification, inspect all lower MRH shaft flange blade bolt attachment areas for a crack as shown in Figure 4 to Paragraph (f)(2)(v) of this AD.

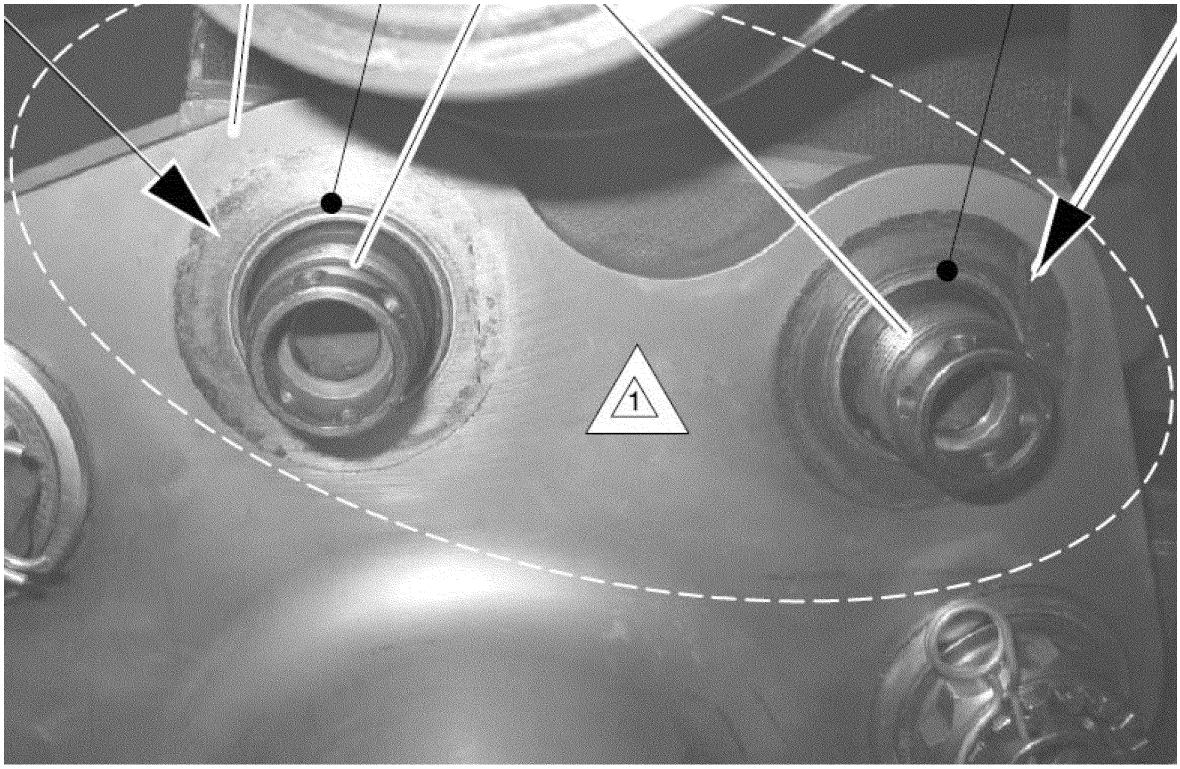

Figure 4 to Paragraph (f)(2)(v)

(3) If there is a crack in the upper or lower MRH shaft flange, before further flight, replace the MRH shaft. Replacing the MRH shaft with an MRH shaft having a part number listed in the applicability of this AD does not constitute terminating action for the requirements of this AD.

(g) Alternative Methods of Compliance (AMOCs)

(1) The Manager, Safety Management Group, FAA, may approve AMOCs for this AD. Send your proposal to: Gary Roach, Aviation Safety Engineer, Regulations and Policy Group, Rotorcraft Directorate, FAA, 2601 Meacham Blvd., Fort Worth, Texas 76137; telephone (817) 222–5110; email *gary.b.roach@faa.gov.*

(2) For operations conducted under a 14 CFR part 119 operating certificate or under 14 CFR part 91, subpart K, we suggest that you notify your principal inspector, or lacking a principal inspector, the manager of the local flight standards district office or certificate holding district office, before operating any aircraft complying with this AD through an AMOC.

(h) Additional Information

(1) Eurocopter Emergency Alert Service Bulletin EC135–62A–029, Revision 2, dated May 17, 2012, which is not incorporated by reference, contains additional information about the subject of this AD. For service information identified in this AD, contact American Eurocopter Corporation, 2701 N. Forum Drive, Grand Prairie, Texas 75052; telephone (972) 641–0000 or (800) 232–0323; fax (972) 641–3775; or at *http://www.eurocopter.com/techpub.* You may review this service information at the FAA, Office of the Regional Counsel, Southwest Region, 2601 Meacham Blvd., Room 663, Fort Worth, Texas 76137.

(2) The subject of this AD is addressed in European Aviation Safety Agency AD No. 2012–0085–E, dated May 17, 2012.

(i) Subject

Joint Aircraft Service Component (JASC) Code: 6220, Main Rotor Head.

Issued in Fort Worth, Texas, on October 30, 2012.

Kim Smith,

Directorate Manager, Rotorcraft Directorate, Aircraft Certification Service.

[FR Doc. 2012–28100 Filed 11–19–12; 8:45 am]

BILLING CODE 4910–13–P

DEPARTMENT OF HOMELAND SECURITY

Coast Guard

33 CFR Part 117

[Docket No. USCG–2012–0994]

Drawbridge Operation Regulation; Barataria Bayou, Lafitte, LA

AGENCY: Coast Guard, DHS.

ACTION: Notice of temporary deviation from regulations.

SUMMARY: The Coast Guard has issued a temporary deviation from the operating schedule that governs the LA 302 (Kerner) swing span bridge across the Barataria Bayou, mile 35.7, at Lafitte, Louisiana. The deviation is necessary to allow a movie production crew to safely film at the bridge site. This deviation allows the bridge to remain closed to navigation for 12 hours on two separate nights.

DATES: This deviation is effective from 6 p.m. on November 28 through 6 a.m. November 30, 2012.

ADDRESSES: Documents mentioned in this preamble as being available in the docket are part of docket USCG–2012–0994 and are available online by going to *http://www.regulations.gov,* inserting USCG–2012–0994 in the ''Keyword'' box and then clicking ''Search''. They are also available for inspection or copying at the Docket Management Facility (M–30), U.S. Department of Transportation, West Building Ground Floor, Room W12–140, 1200 New Jersey Avenue SE., Washington, DC 20590, between 9 a.m. and 5 p.m., Monday through Friday, except Federal holidays.

FOR FURTHER INFORMATION CONTACT: If you have questions on this rule, call or email Kay Wade, Bridge Branch, Coast Guard; telephone 504–671–2128, email *Kay.B.Wade@uscg.mil.* If you have questions on viewing the docket, call Renee V. Wright, Program Manager, Docket Operations, telephone 202–366–9826.

SUPPLEMENTARY INFORMATION: The Louisiana Department of Transportation and Development has requested a temporary deviation from the operating schedule of the swing span bridge across the Barataria Bayou at mile 35.7 in Lafitte, Jefferson Parish, Louisiana. The vertical clearance of the bridge in the closed-to-navigation position is 7.2 feet above Mean High Water, elevation 0.8 feet and unlimited in the open-to-navigation position. Vessels will not be allowed to pass under the bridge during the closure.

In accordance with 33 CFR 117.5, the bridge opens on signal for the passage of vessels. This deviation allows the swing span of the bridge to remain closed to navigation from 6 p.m. to 6 a.m. on the evenings of Wednesday, November 28, 2012 and Thursday, November 29, 2012.

The closure is necessary in order to safely allow movie production crews to film at the bridge site. Notices will be published in the Eighth Coast Guard District Local Notice to Mariners and will be broadcast via the Coast Guard Broadcast Notice to Mariners System.

Navigation on the waterway consists of commercial and recreational fishing vessels, oil industry supply boats, crew boats, tug boats and standard barges. No alternate routes are available for the passage of vessels; however, the closure was coordinated with waterway interests who have indicated that they will be able to adjust their operations around the proposed schedule.

The bridge will be able to open in the event of an emergency.

Due to prior experience and coordination with waterway users, it has been determined that this closure will not have a significant effect on vessels that use the waterway.

In accordance with 33 CFR 117.35(e), the drawbridge must return to its regular operating schedule immediately at the end of the designated time period. This deviation from the operating regulations is authorized under 33 CFR 117.35.

Dated: November 2, 2012.

David M. Frank,

Bridge Administrator.

[FR Doc. 2012–28126 Filed 11–19–12; 8:45 am]

BILLING CODE 9110–04–P

DEPARTMENT OF HOMELAND SECURITY

Coast Guard

33 CFR Part 117

[Docket No. USCG–2012–0911]

Drawbridge Operation Regulation; Thea Foss Waterway Previously Known as City Waterway, Tacoma, WA

AGENCY: Coast Guard, DHS.

ACTION: Notice of temporary deviation from regulations; request for comments.

SUMMARY: The Coast Guard has issued a temporary deviation from the operating schedule that governs the Murray Morgan Bridge, also known as the South 11th Street Bridge, across the Thea Foss Waterway, mile 0.6, previously known as City Waterway, at Tacoma, WA. This deviation will test a change to the drawbridge operating schedule to determine whether a permanent change to the schedule is needed. This test deviation will modify the existing regulation and add an advance notification requirement for obtaining bridge openings during designated times. The Coast Guard has also published a notice of proposed rulemaking (NPRM) under docket number USCG–2012–0911 to which comments may be posted