AUTHENTICATED
U.S. GOVERNMENT
INFORMATION
GPO

FEDERAL REGISTER

Vol. 77 Monday,
No. 237 December 10, 2012

Pages 73263–73540

OFFICE OF THE FEDERAL REGISTER

The **FEDERAL REGISTER** (ISSN 0097–6326) is published daily, Monday through Friday, except official holidays, by the Office of the Federal Register, National Archives and Records Administration, Washington, DC 20408, under the Federal Register Act (44 U.S.C. Ch. 15) and the regulations of the Administrative Committee of the Federal Register (1 CFR Ch. I). The Superintendent of Documents, U.S. Government Printing Office, Washington, DC 20402 is the exclusive distributor of the official edition. Periodicals postage is paid at Washington, DC.

The **FEDERAL REGISTER** provides a uniform system for making available to the public regulations and legal notices issued by Federal agencies. These include Presidential proclamations and Executive Orders, Federal agency documents having general applicability and legal effect, documents required to be published by act of Congress, and other Federal agency documents of public interest.

Documents are on file for public inspection in the Office of the Federal Register the day before they are published, unless the issuing agency requests earlier filing. For a list of documents currently on file for public inspection, see *www.ofr.gov.*

The seal of the National Archives and Records Administration authenticates the Federal Register as the official serial publication established under the Federal Register Act. Under 44 U.S.C. 1507, the contents of the **Federal Register** shall be judicially noticed.

The **Federal Register** is published in paper and on 24x microfiche. It is also available online at no charge at *www.fdsys.gov*, a service of the U.S. Government Printing Office.

The online edition of the **Federal Register** is issued under the authority of the Administrative Committee of the Federal Register as the official legal equivalent of the paper and microfiche editions (44 U.S.C. 4101 and 1 CFR 5.10). It is updated by 6:00 a.m. each day the **Federal Register** is published and includes both text and graphics from Volume 59, 1 (January 2, 1994) forward. For more information, contact the GPO Customer Contact Center, U.S. Government Printing Office. Phone 202-512-1800 or 866-512-1800 (toll free). E-mail, *gpo@custhelp.com.*

The annual subscription price for the **Federal Register** paper edition is $749 plus postage, or $808, plus postage, for a combined **Federal Register, Federal Register** Index and List of CFR Sections Affected (LSA) subscription; the microfiche edition of the **Federal Register** including the **Federal Register** Index and LSA is $165, plus postage. Six month subscriptions are available for one-half the annual rate. The prevailing postal rates will be applied to orders according to the delivery method requested. The price of a single copy of the daily **Federal Register,** including postage, is based on the number of pages: $11 for an issue containing less than 200 pages; $22 for an issue containing 200 to 400 pages; and $33 for an issue containing more than 400 pages. Single issues of the microfiche edition may be purchased for $3 per copy, including postage. Remit check or money order, made payable to the Superintendent of Documents, or charge to your GPO Deposit Account, VISA, MasterCard, American Express, or Discover. Mail to: U.S. Government Printing Office—New Orders, P.O. Box 979050, St. Louis, MO 63197-9000; or call toll free 1-866-512-1800, DC area 202-512-1800; or go to the U.S. Government Online Bookstore site, see *bookstore.gpo.gov.*

There are no restrictions on the republication of material appearing in the **Federal Register.**

How To Cite This Publication: Use the volume number and the page number. Example: 77 FR 12345.

Postmaster: Send address changes to the Superintendent of Documents, Federal Register, U.S. Government Printing Office, Washington, DC 20402, along with the entire mailing label from the last issue received.

SUBSCRIPTIONS AND COPIES

PUBLIC

Subscriptions:

Paper or fiche	**202–512–1800**
Assistance with public subscriptions	**202–512–1806**

General online information **202–512–1530; 1–888–293–6498**

Single copies/back copies:

Paper or fiche	**202–512–1800**
Assistance with public single copies	**1–866–512–1800 (Toll-Free)**

FEDERAL AGENCIES

Subscriptions:

Paper or fiche	**202–741–6005**
Assistance with Federal agency subscriptions	**202–741–6005**

FEDERAL REGISTER WORKSHOP

THE FEDERAL REGISTER: WHAT IT IS AND HOW TO USE IT

FOR: Any person who uses the Federal Register and Code of Federal Regulations.

WHO: Sponsored by the Office of the Federal Register.

WHAT: Free public briefings (approximately 3 hours) to present:

1. The regulatory process, with a focus on the Federal Register system and the public's role in the development of regulations.
2. The relationship between the Federal Register and Code of Federal Regulations.
3. The important elements of typical Federal Register documents.
4. An introduction to the finding aids of the FR/CFR system.

WHY: To provide the public with access to information necessary to research Federal agency regulations which directly affect them. There will be no discussion of specific agency regulations.

WHEN: Tuesday, December 11, 2012
9 a.m.–12:30 p.m.

WHERE: Office of the Federal Register
Conference Room, Suite 700
800 North Capitol Street, NW.
Washington, DC 20002

RESERVATIONS: (202) 741–6008

Printed on recycled paper.

Contents

Federal Register

Vol. 77, No. 237

Monday, December 10, 2012

Agriculture Department
See Food Safety and Inspection Service
See Forest Service
See National Agricultural Statistics Service

Army Department
See Engineers Corps
NOTICES
Electronic Transportation Acquisition:
Transportation Workers Identification Card Removal for Access, 73455
Military Freight Carrier Registration Program, 73455–73456
Update to the TR–12 Fuel Related Rate Adjustment Policy, SDDC Fuel Surcharge Policy, 73456

Broadcasting Board of Governors
NOTICES
Meetings; Sunshine Act, 73413–73414

Centers for Disease Control and Prevention
NOTICES
Agency Information Collection Activities; Proposals, Submissions, and Approvals, 73469–73471

Coast Guard
RULES
Certificates Recognized Classification Societies May Issue:
International Energy Efficiency Certificate, 73334–73338
Special Local Regulations and Safety Zones:
America's Cup Sailing Events, San Francisco, CA; Correction, 73311–73312

Commerce Department
See Foreign-Trade Zones Board
See International Trade Administration
See National Oceanic and Atmospheric Administration
See Patent and Trademark Office
NOTICES
Agency Information Collection Activities; Proposals, Submissions, and Approvals, 73414

Consumer Product Safety Commission
RULES
Codification of Animal Testing Policy, 73286–73289
Hazardous Substances and Articles:
Revisions to Animal Testing Regulations, 73289–73294
Requirements for Child-Resistant Packaging:
Products Containing Imidazolines Equivalent to 0.08 Milligrams or More, 73294–73302
PROPOSED RULES
Safety Standard for Bedside Sleepers, 73345–73354
Safety Standard for Hand-Held Infant Carriers, 73354–73366

Corporation for National and Community Service
NOTICES
Agency Information Collection Activities; Proposals, Submissions, and Approvals, 73453–73455

Defense Department
See Army Department
See Engineers Corps
See Navy Department
RULES
Federal Acquisition Regulations:
Federal Acquisition Circular 2005–63; Introduction, 73516
Federal Acquisition Circular 2005–63; Small Entity Compliance Guide, 73520–73521
Iran Threat Reduction, 73516–73520

Energy Department
See Energy Efficiency and Renewable Energy Office

Energy Efficiency and Renewable Energy Office
NOTICES
Vehicle Technologies Program, 73458–73459

Engineers Corps
NOTICES
Environmental Impact Statements; Availability, etc.:
Gateway Pacific Terminals Bulk Dry Goods Shipping Facility and Custer Spur Rail Expansion Projects; Correction, 73456

Environmental Protection Agency
RULES
Approvals and Promulgations of Air Quality Implementation Plans:
Maryland; 2002 Base Year Inventory for Baltimore Nonattainment Area for 1997 Fine Particulate Matter National Ambient Air Quality Standard, 73313–73316
Approvals of Air Quality Implementation Plans:
California; Eastern Kern, Imperial, Placer, and Yolo–Solano; Prevention of Significant Deterioration, 73316–73320
California; South Coast Air Quality Management District; Prevention of Significant Deterioration; Greenhouse Gases, 73320–73322
Revisions to the California State Implementation Plan:
Monterey Bay Unified Air Pollution Control District, 73322–73324
PROPOSED RULES
Approvals and Promulgations of Air Quality Implementation Plans:
Florida; Regional Haze State Implementation Plan, 73369–73386
Maryland; 2002 Base Year Inventory for Baltimore Nonattainment Area for 1997 Fine Particulate Matter National Ambient Air Quality Standard, 73386–73387
Pennsylvania; Determinations of Attainment of the 1997 8-Hour Ozone Standard for the Pittsburgh–Beaver Valley Moderate Nonattainment Area, 73387–73391
Approvals of Air Quality Implementation Plans:
California; Eastern Kern, Imperial County, Placer County, and Yolo–Solano; Prevention of Significant Deterioration, 73391–73392
Revisions to the California State Implementation Plan:
Monterey Bay Unified Air Pollution Control District, 73392–73393

NOTICES
California State Motor Vehicle Pollution Control Standards:
Waiver of Clean Air Act Preemption; 2010 Model Year Heavy–Duty Vehicle and Engine On-board Diagnostic Standards, 73459–73461

Federal Aviation Administration
RULES
Airworthiness Directives:
Agusta S.p.A. (Type Certificate currently held by AgustaWestland S.p.A) (Agusta) Helicopters, 73273–73279
Embraer S.A. Airplanes, 73270–73273
Erickson Air-Crane Incorporated Helicopters, 73265–73268
Rolls-Royce plc Turbofan Engines, 73268–73270
Saab AB, Saab Aerosystems Airplanes, 73279–73282
The Boeing Company Airplanes, 73282–73286
PROPOSED RULES
Airworthiness Directives:
Airbus Airplanes, 73340–73345
NOTICES
National Plan of Integrated Airport Systems:
Wildlife Hazard Management Requirements for Non-certificated Federally Obligated Airports; Clarification, 73511–73514

Federal Communications Commission
NOTICES
Broadcast Ownership Report, 73461–73462
Meetings; Sunshine Act, 73462–73463

Federal Deposit Insurance Corporation
NOTICES
Meetings; Sunshine Act, 73463–73464

Federal Emergency Management Agency
RULES
Final Flood Elevation Determinations, 73324–73334
PROPOSED RULES
Proposed Flood Elevation Determinations; Correction, 73393–73400
NOTICES
Changes in Flood Hazard Determinations, 73475–73486
Emergency Declarations:
District of Columbia; Amendment No. 2, 73486
District of Columbia; Amendment No. 3, 73486
Massachusetts; Amendment No. 2, 73486–73487
Rhode Island; Amendment No. 1, 73486
Major Disaster Declarations:
Alabama; Amendment No. 19, 73488–73489
Connecticut; Amendment No. 2, 73487
Minnesota; Amendment No. 3, 73488
New Jersey; Amendment No. 5, 73488
New York; Amendment No. 4, 73489
New York; Amendment No. 5, 73489–73490
Rhode Island; Amendment No. 1, 73489
Rhode Island; Amendment No. 2, 73487
Major Disasters and Related Determinations:
Delaware, 73490
Proposed Flood Hazard Determinations, 73490–73493

Federal Housing Enterprise Oversight Office
RULES
Organization and Functions, and Seal, 73263–73265

Federal Housing Finance Agency
RULES
Organization and Functions, and Seal, 73263–73265
NOTICES
Privacy Act; Systems of Records, 73464–73466

Federal Housing Finance Board
RULES
Organization and Functions, and Seal, 73263–73265

Federal Reserve System
NOTICES
Changes in Bank Control:
Acquisitions of Shares of a Bank or Bank Holding Company, 73466
Formations of, Acquisitions by, and Mergers of Bank Holding Companies, 73466–73467
Proposals to Engage in or to Acquire Companies Engaged in Permissible Nonbanking Activities, 73467

Federal Trade Commission
NOTICES
Agency Information Collection Activities; Proposals, Submissions, and Approvals, 73467–73469

Fish and Wildlife Service
NOTICES
Endangered and Threatened Wildlife and Plants:
Recovery Permit Applications, 73494–73495

Food and Drug Administration
NOTICES
Meetings:
Cellular, Tissue, and Gene Therapies Advisory Committee, 73472–73473
Endocrinologic and Metabolic Drugs Advisory Committee, 73471–73472

Food Safety and Inspection Service
NOTICES
Not Applying the Mark of Inspection Pending Certain Test Results, 73401–73411

Foreign-Trade Zones Board
NOTICES
Approval for Expansion of Manufacturing Authority:
Mercury Marine, Foreign-Trade Subzone 41H, Fond du Lac and Oshkosh, WI, 73414
Approvals for Manufacturing Authority:
Sub-Zero, Inc., Foreign-Trade Zone 277, Goodyear, AZ, 73415
Authorizations of Export Production Activities:
TST NA Trim, LLC, Foreign-Trade Subzone 12A, Hidalgo, TX, 73415

Forest Service
NOTICES
Meetings:
Lake Tahoe Basin Federal Advisory Committee, 73411–73412
Newspapers Used for Publication of Legal Notices:
Southwestern Region; Arizona, New Mexico, Oklahoma and Texas, 73412–73413

General Services Administration
RULES
Federal Acquisition Regulations:
Federal Acquisition Circular 2005–63; Introduction, 73516
Federal Acquisition Circular 2005–63; Small Entity Compliance Guide, 73520–73521

Iran Threat Reduction, 73516–73520

Health and Human Services Department
See Centers for Disease Control and Prevention
See Food and Drug Administration
See Health Resources and Services Administration
See National Institutes of Health

Health Resources and Services Administration
NOTICES
Agency Information Collection Activities; Proposals, Submissions, and Approvals, 73473
Meetings:
National Advisory Council on the National Health Service Corps, 73473

Homeland Security Department
See Coast Guard
See Federal Emergency Management Agency
See U.S. Customs and Border Protection

Housing and Urban Development Department
See Federal Housing Enterprise Oversight Office
RULES
HUD Acquisition Regulations, 73524–73539
NOTICES
Agency Information Collection Activities; Proposals, Submissions, and Approvals:
Family Self-Sufficiency Program Demonstration, 73493–73494

Interior Department
See Fish and Wildlife Service

International Trade Administration
NOTICES
Antidumping Duty Administrative Reviews; Results, Extensions, Amendments, etc.:
Ball Bearings and Parts Thereof from France, Germany, and Italy, 73415–73417
Certain Frozen Fish Fillets from the Socialist Republic of Vietnam, 73424
Diamond Sawblades and Parts Thereof from the People's Republic of China, 73417–73420
Diamond Sawblades and Parts Thereof from the Republic of Korea, 73420–73422
Seamless Refined Copper Pipe and Tube from Mexico, 73422–73424
Antidumping Duty Orders:
Steel Wire Garment Hangers from Taiwan, 73424–73425
Antidumping Duty Orders; Results, Extensions, Amendments, etc.:
Glycine From the People's Republic of China, 73426–73428
Countervailing Duty Investigations, Extensions, Amendments, etc.:
Hardwood and Decorative Plywood from the People's Republic of China, 73428
Polyethylene Terephthalate Film, Sheet, and Strip from the People's Republic of China:
Preliminary Results of Administrative Review; 2010–2011, 73428–73430
Preliminary Affirmative Determinations of Critical Circumstances:
Steel Wire Garment Hangers from the Socialist Republic of Vietnam, 73430–73432

Justice Department
See Justice Programs Office
NOTICES
Lodgings of Proposed Consent Decrees:
Comprehensive Environmental Response, Compensation and Liability Act, 73496

Justice Programs Office
NOTICES
Agency Information Collection Activities; Proposals, Submissions, and Approvals:
Standard Assurances Form, 73496–73497
Meetings:
Science Advisory Board, 73497

National Aeronautics and Space Administration
RULES
Federal Acquisition Regulations:
Federal Acquisition Circular 2005–63; Introduction, 73516
Federal Acquisition Circular 2005–63; Small Entity Compliance Guide, 73520–73521
Iran Threat Reduction, 73516–73520

National Agricultural Statistics Service
NOTICES
Agency Information Collection Activities; Proposals, Submissions, and Approvals, 73413

National Institutes of Health
NOTICES
Meetings:
Center for Scientific Review, 73474–73475
National Deafness and Other Communication Disorders, 73474

National Oceanic and Atmospheric Administration
RULES
Fisheries of the Caribbean, Gulf of Mexico, and South Atlantic:
2012 Commercial Accountability Measure and Closure for South Atlantic Blue Runner, 73338–73339
NOTICES
Agency Information Collection Activities; Proposals, Submissions, and Approvals:
Survey of Shore-based and Boat-based Non-Commercial Fishing on St. Croix, U.S. Virgin Islands, 73432–73433
Appointments to a Recreational Fisheries Working Group, 73433–73434
Takes of Marine Mammals Incidental to Specified Activities:
Incidental to Seismic Survey in Cook Inlet, AK, 73434–73451
Workshops:
Atlantic Shark Identification and Protected Species Safe Handling, Release, and Identification, 73451–73452

Navy Department
NOTICES
Intents to Grant Exclusive Patent Licenses:
Fiber Optic Sensor Systems Technology Corp., 73456–73457
Nominations for Membership on the Ocean Research Advisory Panel, 73457–73458

Nuclear Regulatory Commission
NOTICES
Meetings:
Advisory Committee on Reactor Safeguards Subcommittee on US-APWR, 73497–73498

Office of Federal Housing Enterprise Oversight
See Federal Housing Enterprise Oversight Office

Patent and Trademark Office
NOTICES
Agency Information Collection Activities; Proposals, Submissions, and Approvals:
Grace Period Study, 73452–73453

Securities and Exchange Commission
RULES
Certain Requirements and Amendment of Form 19b–4; Extension of Dates, 73302–73305
NOTICES
Meetings; Sunshine Act, 73498
Self-Regulatory Organizations; Proposed Rule Changes:
Chicago Board Options Exchange, Inc., 73498–73500, 73508–73509
NYSE Arca, Inc., 73500–73508
Suspension of Trading Orders:
Emerging World Pharma, Inc., 73509

Small Business Administration
NOTICES
Agency Information Collection Activities; Proposals, Submissions, and Approvals, 73509–73510
Disaster Declarations:
Alaska, 73511
Virginia, 73510–73511
West Virginia, 73510

State Department
NOTICES
Culturally Significant Objects Imported for Exhibition Determinations:
Arts of Islamic Lands; Masterpieces from The al–Sabah Collection, Kuwait, 73511

Statistical Reporting Service
See National Agricultural Statistics Service

Transportation Department
See Federal Aviation Administration

U.S. Customs and Border Protection
RULES
List of User Fee Airports:
Bozeman Yellowstone International Airport, Belgrade, MT, 73310–73311
Technical Corrections to U.S. Customs and Border Protection Regulations, 73306–73310

Veterans Affairs Department
RULES
State Veterans Homes; Technical Revisions, 73312–73313
PROPOSED RULES
Secondary Service Connection for Diagnosable Illnesses Associated With Traumatic Brain Injury, 73366–73369

Separate Parts In This Issue

Part II
Defense Department, 73516–73521
General Services Administration, 73516–73521
National Aeronautics and Space Administration, 73516–73521

Part III
Housing and Urban Development Department, 73524–73539

Reader Aids

Consult the Reader Aids section at the end of this page for phone numbers, online resources, finding aids, reminders, and notice of recently enacted public laws.

To subscribe to the Federal Register Table of Contents LISTSERV electronic mailing list, go to http://listserv.access.gpo.gov and select Online mailing list archives, FEDREGTOC-L, Join or leave the list (or change settings); then follow the instructions.

CFR PARTS AFFECTED IN THIS ISSUE

A cumulative list of the parts affected this month can be found in the Reader Aids section at the end of this issue.

12 CFR
905 73263
1200 73263
1700 73263

14 CFR
39 (6 documents) 73265, 73268, 73270, 73273, 73279, 73282

Proposed Rules:
39 (2 documents) 73340, 73343

16 CFR
1500 (2 documents) 73286, 73289
1700 73294

Proposed Rules:
1112 (2 documents) 73345, 73354
1222 73345
1225 73354

17 CFR
240 73302
249 73302

19 CFR
4 73306
24 73306
101 73306
102 73306
122 73310
127 73306
159 73306
161 73306
177 73306

33 CFR
100 73311

38 CFR
53 73312

Proposed Rules:
3 73366

40 CFR
52 (4 documents) 73313, 73316, 73320, 73322

Proposed Rules:
52 (5 documents) 73369, 73386, 73387, 73391, 73392

44 CFR
67 73324

Proposed Rules:
67 (4 documents) 73393, 73394, 73396, 73398

46 CFR
8 73334

48 CFR
Ch. I (2 documents) 73516, 73520
4 73516
25 73516
52 73516
2401 73524
2402 73524
2403 73524
2404 73524
2406 73524
2407 73524
2409 73524
2415 73524
2416 73524
2417 73524
2419 73524
2426 73524
2427 73524
2428 73524
2432 73524
2437 73524
2439 73524
2442 73524
2452 73524

50 CFR
622 73338

Rules and Regulations

Federal Register
Vol. 77, No. 237
Monday, December 10, 2012

This section of the FEDERAL REGISTER contains regulatory documents having general applicability and legal effect, most of which are keyed to and codified in the Code of Federal Regulations, which is published under 50 titles pursuant to 44 U.S.C. 1510.

The Code of Federal Regulations is sold by the Superintendent of Documents. Prices of new books are listed in the first FEDERAL REGISTER issue of each week.

FEDERAL HOUSING FINANCE BOARD

12 CFR Part 905

FEDERAL HOUSING FINANCE AGENCY

12 CFR Part 1200

DEPARTMENT OF HOUSING AND URBAN DEVELOPMENT

Office of Federal Housing Enterprise Oversight

12 CFR Part 1700

RIN 2590–AA54

Organization and Functions, and Seal

AGENCY: Federal Housing Finance Agency.

ACTION: Final rule.

SUMMARY: The Federal Housing Finance Agency (FHFA) adopts final regulations containing a description of its organization and description of its seal and logo. This rule removes comparable existing regulations of the Federal Housing Finance Board (Finance Board) and the Office of Federal Housing Enterprise Oversight (OFHEO), and establishes new FHFA regulations.

DATES: *Effective Date:* December 10, 2012.

FOR FURTHER INFORMATION CONTACT: Donna R. Ely, Associate General Counsel, Office of the General Counsel, (202) 649–3068 (not a toll free number), *Donna.Ely@fhfa.gov,* 400 Seventh Street SW., Eighth Floor, Washington, DC 20024. The telephone number for the Telecommunications Device for the Hearing Impaired is (800) 877–8339.

SUPPLEMENTARY INFORMATION:

I. Background

Effective July 30, 2008, Division A of the Housing and Economic Recovery Act of 2008 (HERA), Public Law 110–289, 122 Stat. 2654 (2008), titled the Federal Housing Finance Regulatory Reform Act of 2008, amended the Federal Housing Enterprises Financial Safety and Soundness Act of 1992 (12 U.S.C. 4501 *et seq.*) (Safety and Soundness Act) and created FHFA as an independent agency of the Federal Government. HERA provided for the abolishment of the Office of Federal Housing Enterprise Oversight (OFHEO) and the Federal Housing Finance Board (Finance Board) one year after the date of enactment. Those agencies, together with the Housing and Urban Development Enterprise mission staff, were combined to establish FHFA. FHFA was established to oversee the prudential operations of the Federal National Mortgage Association (Fannie Mae), the Federal Home Loan Mortgage Corporation (Freddie Mac) (together, Enterprises), and the Federal Home Loan Banks (Banks); and to ensure that they operate in a safe and sound manner, remain adequately capitalized, foster liquid, efficient, competitive and resilient national housing finance markets, comply with the Safety and Soundness Act and their respective authorizing statutes, as well as all rules, regulations, guidelines and orders under those statutes, and carry out their missions through activities that are authorized by their respective statutes and are consistent with the public interest. FHFA also has regulatory authority over the Federal Home Loan Bank System's Office of Finance under section 1311(b)(2) of the Safety and Soundness Act (12 U.S.C. 4511(b)(2)).

II. Description of the Regulation

The rule sets forth FHFA's business address and hours of operation.

The rule also informs the public about FHFA's organization and structure, including the Office of the Director, the Division of Enterprise Regulation, the Division of Housing Mission and Goals, the Division of Federal Home Loan Bank Regulation, the Office of Inspector General, the Office of General Counsel, the Office of the Ombudsman, and the Office of Minority and Women Inclusion.

The rule describes and depicts FHFA's official logo and seal.

FHFA is removing the comparable regulations of the Finance Board and OFHEO, 12 CFR part 905 of the Finance Board regulations and 12 CFR part 1700 of the OFHEO regulations.

II. Regulatory Impact

Paperwork Reduction Act

This final rule does not contain any information collection requirements that require the approval of the Office of Management and Budget under the Paperwork Reduction Act (44 U.S.C. 3501 *et seq.).*

Regulatory Flexibility Act

Because no notice of proposed rulemaking is required for this regulation, the provisions of the Regulatory Flexibility Act (5 U.S.C. 601 *et seq.*) do not apply. *See* 5 U.S.C. 601(2) and 603(a).

Administrative Procedure Act

In promulgating this regulation, FHFA has determined that notice and public comment are not necessary. Section 553(b)(A) of title 5, United States Code, provides that when regulations involve matters of agency organization, procedure or practice, the agency may publish regulations in final form. In addition, FHFA finds, in accordance with 5 U.S.C. 553(d), that a delayed effective date is unnecessary. Accordingly, these regulations are effective upon publication.

List of Subjects

12 CFR Part 905

Federal home loan banks, Organization and functions (Government agencies).

12 CFR Part 1200

Organization and functions (Government agencies), Seals and insignia.

12 CFR Part 1700

Organization and functions (Government agencies).

Authority and Issuance

Accordingly, for the reasons stated in the Supplementary Information, under the authority of 12 U.S.C. 4526, 12 U.S.C. 4512, and 5 U.S.C. 552, FHFA amends Chapters IX, XII, and XVII of title 12 of the Code of Federal Regulations as follows:

Chapter IX—Federal Housing Finance Board

PART 905—[REMOVED]

■ 1. Remove part 905.

Chapter XII—Federal Housing Finance Agency

Subchapter A—Organization and Operations

■ 2. Add part 1200 to subchapter A to read as follows:

PART 1200—ORGANIZATION AND FUNCTIONS

Sec.
1200.1 Federal Housing Finance Agency.
1200.2 Organization of the Federal Housing Finance Agency.
1200.3 Official logo and seal.

Authority: 5 U.S.C. 552, 12 U.S.C. 4512, 12 U.S.C. 4526.

§ 1200.1 Federal Housing Finance Agency.

(a) *Scope and authority.* The Federal Housing Finance Agency (FHFA) is an independent agency of the Federal Government. Division A of the Housing and Economic Recovery Act of 2008, Public Law 110–289, 122 Stat. 2654, titled the Federal Housing Finance Regulatory Reform Act of 2008, amended the Federal Housing Enterprises Financial Safety and Soundness Act of 1992 (12 U.S.C. 4501 *et seq.*) (Safety and Soundness Act) and the Federal Home Loan Bank Act (12 U.S.C. 1421–1449) to establish FHFA. FHFA administers the Safety and Soundness Act and the regulated entities' authorizing statutes: the Federal Home Loan Bank Act, the Federal National Mortgage Association Charter Act, and the Federal Home Loan Mortgage Corporation Act. FHFA is responsible for the supervision and regulation of the Federal National Mortgage Corporation (Fannie Mae), the Federal Home Loan Mortgage Corporation (Freddie Mac), (together, Enterprises), the Federal Home Loan Banks (Banks) (collectively, the ''regulated entities''), and the Office of Finance (OF). FHFA is charged with ensuring that the regulated entities: Operate in a safe and sound manner, including maintaining adequate capital and internal controls; foster liquid, efficient, competitive, and resilient national housing finance markets; comply with the Safety and Soundness Act and their respective authorizing statutes, and rules, regulations and orders issued under the Safety and Soundness Act and the authorizing statutes; and carry out their respective statutory missions through activities and operations that are authorized and consistent with the Safety and Soundness Act, their respective authorizing statutes, and the public interest. FHFA's costs and expenses are funded by annual assessments paid by the regulated entities. FHFA is headed by a director, who is appointed by the President and confirmed by the Senate for a five-year term.

(b) *Location.* FHFA's headquarters is located at 400 Seventh Street SW., Washington, DC 20024. FHFA's official hours of business are 8:00 a.m.–5 p.m. (Eastern Time), Monday through Friday, excluding Federal holidays.

§ 1200.2 Organization of the Federal Housing Finance Agency.

(a) *Director.* The Director is responsible for overseeing the prudential operations of each regulated entity, and for ensuring that each regulated entity: Operates in a safe and sound manner; operates and acts to foster liquid, efficient, competitive, and resilient national housing financing markets; complies with the Safety and Soundness Act, its authorizing statute, and rules, regulations, guidelines, and orders issued under those statutes; carries out its mission only through activities that are authorized by statute; and acts and operates consistent with the public interest. The Director may delegate to FHFA officers and employees any of the functions, powers, and duties of the Director as the Director considers appropriate. The Director manages FHFA, including through authorities delegated to FHFA officers and employees.

(b) *Deputy Director of the Division of Enterprise Regulation.* The Deputy Director is responsible for managing FHFA's program of prudential supervision of the Enterprises. The Deputy Director provides management oversight, direction, and support for all examination activity involving the Enterprises, the development of supervision findings, and preparation of the annual reports of examination. The Deputy Director provides support and advice to the Director and other senior executives and represents the division on significant and emerging supervisory issues and development of FHFA supervisory policy, and has such other responsibilities as the Director may prescribe.

(c) *Deputy Director of the Division of Housing Mission and Goals.* The Deputy Director is responsible for FHFA policy development and analysis, oversight of housing and regulatory policy, and oversight of the mission and goals of the Enterprises. The Deputy Director oversees and coordinates FHFA activities regarding data analysis, market surveillance, policy development, policy research and analysis affecting housing finance and financial markets, and policy analysis and research in support of FHFA's mission and the Director's responsibilities as a member of the Federal Housing Finance Oversight board, the Financial Stability Oversight Board, and the Financial Stability Oversight Council, and has such other responsibilities as the Director may prescribe.

(d) *Deputy Director of the Division of Federal Home Loan Bank Regulation.* The Deputy Director is responsible for managing FHFA's program of prudential supervision of the Banks and the OF. The Deputy Director provides management oversight, direction and support for all examination activity involving the Banks, the development of supervision findings, and preparation of the annual reports of examination. The Deputy Director provides support and advice to the Director and other senior executives and represents the division on significant and emerging supervisory issues and development of FHFA supervisory policy, and has such other responsibilities as the Director may prescribe.

(e) *Offices and functions*—(1) *Office of the Director.* The Office of the Director supports the activities of the Director and includes Offices as the Director may create within the Office of the Director.

(2) *Division of Enterprise Regulation.* The division supports and implements the responsibilities of the Deputy Director described in paragraph (b) of this section. The division oversees and directs all Enterprise supervisory activities, develops examination findings, prepares reports of examination, and prepares the sections of the Annual Report to Congress that describe the condition and performance of each Enterprise. The division monitors and assesses the financial condition and performance of the Enterprises. By means of annual examinations and a continuous on-site presence, the division monitors and assesses the amount of risk each Enterprise assumes, the quality of risk management, and compliance with regulations.

(3) *Division of Housing Mission and Goals.* The division supports and implements the responsibilities of the Deputy Director described in paragraph (c) of this section. In support of FHFA's mission and the Director's responsibilities as a member of the Federal Housing Finance Oversight Board, the Financial Stability Oversight Board, and the Financial Stability

Oversight Committee, the division also oversees and coordinates FHFA activities that involve certain data analysis, and analysis affecting housing finance and financial markets.

(4) *Division of Federal Home Loan Bank Regulation.* The division supports and implements the responsibilities of the Deputy Director described in paragraph (d) of this section, including overseeing and directing all Bank supervisory activities, developing examination findings, preparing reports of examination, and preparing the sections of the annual report to Congress that describe the condition and performance of the Banks. The division monitors and assesses the financial condition and performance of the Banks and the OF and monitors and assesses their compliance with regulations, the amount of risk they assume, and the quality of their risk management through annual on-site examinations, periodic visits, and ongoing off-site monitoring and analysis.

(5) *Office of Inspector General.* The office is headed by a presidentially appointed and Senate-confirmed Inspector General who serves under the general supervision of the Director. The office carries out activities and responsibilities established in the Inspector General Act of 1978.

(6) *Office of General Counsel.* The office advises and supports the Director and FHFA staff on legal matters related to the functions, activities, and operations of FHFA and the regulated entities; it supports supervision functions, development and promulgation of regulations and orders, and enforcement actions. The office manages the Freedom of Information, Privacy Act and ethics programs. The Designated Agency Ethics Official advises, counsels, and trains FHFA employees on ethical standards and conflicts of interest, and manages the agency's financial disclosure program.

(7) *Office of the Ombudsman.* The office is responsible for considering complaints and appeals from the regulated entities, the OF and any person that has a business relationship with a regulated entity or the OF concerning any matter relating to FHFA's regulation and supervision of that entity or the OF.

(8) *Office of Minority and Women Inclusion.* The office is responsible for all matters of FHFA relating to diversity in management, employment, and business activities, and for supervising the diversity requirements applicable to the regulated entities and the OF.

(f) *Other Offices and Departments.* The Director may from time to time establish other Offices and Divisions of the agency as the Director deems necessary or appropriate to carry out FHFA's mission, such as an Office of Conservatorship Operations during such period as regulated entities are under FHFA's conservatorship; an Office of Strategic Initiatives to manage such strategic initiatives as the Director may identify; and a Division of Supervision Policy and Support to facilitate consistent supervision and examination policies across all regulated entities. The Director may also establish other Offices and positions as the Director deems necessary and appropriate to support the operations of a federal agency, such as a Chief Operating Officer, a Chief Financial Officer, an Office of Information Technology, and such other offices, departments, and positions as are necessary and appropriate or may be required by statute.

(g) *Additional information.* Current information on the organization of FHFA may be obtained by mail from the Office of Congressional Affairs and Communications, 400 Seventh Street, SW., Washington, DC 20024. Such information, as well as other FHFA information, also may be obtained electronically by accessing FHFA's Web site located at *www.FHFA.gov.*

§ 1200.3 Official logo and seal.

This section describes and displays the logo adopted by the Director as the official symbol representing FHFA. It is displayed on correspondence, selected documents, and signage. The logo serves as the official seal to certify and authenticate official documents of the agency.

(a) *Description.* The logo is a disc consisting of three polygons each drawn in a manner resembling a silhouette of a pitched roof house and with distinctive eaves under its roof. Each polygon is placed one in front of the other, two of which are diminished in size from the polygon behind it. Placed in the center of the smallest polygon is the acronym for the organization, ''FHFA.'' The polygons are encircled by a designation scroll having an outer and inner border of plain heavy lines and containing the words ''FEDERAL HOUSING FINANCE AGENCY'' in capital letters with serifs, with two mullets on the extreme left and right of the scroll.

(b) *Display.* FHFA's official logo and seal appears below:

Chapter XVII—Office of Federal Housing Enterprise Oversight, Department of Housing and Urban Development

PART 1700—[REMOVED]

■ 3. Remove part 1700.

Dated: December 3, 2012.

Edward J. DeMarco,

Acting Director, Federal Housing Finance Agency.

[FR Doc. 2012–29695 Filed 12–7–12; 8:45 am]

BILLING CODE 8070–01–P

DEPARTMENT OF TRANSPORTATION

Federal Aviation Administration

14 CFR Part 39

[Docket No. FAA–2008–1243; Directorate Identifier 2007–SW–03–AD; Amendment 39–17267; AD 2012–23–11]

RIN 2120–AA64

Airworthiness Directives; Erickson Air-Crane Incorporated Helicopters

AGENCY: Federal Aviation Administration (FAA), DOT.

ACTION: Final rule.

SUMMARY: We are adopting a new airworthiness directive (AD) for Erickson Air-Crane Incorporated (Erickson) Model S–64F helicopters. This AD requires inspecting for cracking or working rivets in each left and right splice fitting (transition fitting), the pylon bulkhead assembly-canted (bulkhead assembly), and the pylon steel strap (strap). This AD was prompted by several reports of cracking in the transition fittings, the bulkhead assembly, and the pylon. The actions specified by this AD are intended to detect cracking in the rotary rudder boom or pylon due to fatigue, and to prevent failure from static overload and subsequent loss of control of the helicopter.

DATES: This AD is effective January 14, 2013.

The Director of the Federal Register approved the incorporation by reference of a certain document listed in this AD as of January 14, 2013.

ADDRESSES: For service information identified in this AD, contact Erickson Air-Crane Incorporated, ATTN: Chris Erickson/Compliance Officer, 3100 Willow Springs Rd., P.O. Box 3247, Central Point, OR 97502; telephone (541) 664–5544; fax (541) 664–2312; email *cerickson@ericksonaircrane.com.* You may review the referenced service information at the FAA, Office of the Regional Counsel, Southwest Region, 2601 Meacham Blvd., Room 663, Fort Worth, Texas 76137.

Examining the AD Docket

You may examine the AD docket on the Internet at *http://www.regulations.gov;* or in person at the Docket Operations Office between 9 a.m. and 5 p.m., Monday through Friday, except Federal holidays. The AD docket contains this AD, any incorporated-by-reference service information, the economic evaluation, any comments received, and other information. The street address for the Docket Operations Office (phone: 800–647–5527) is U.S. Department of Transportation, Docket Operations Office, M–30, West Building Ground Floor, Room W12–140, 1200 New Jersey Avenue SE., Washington, DC 20590.

FOR FURTHER INFORMATION CONTACT: Michael Kohner, Aviation Safety Engineer, Rotorcraft Certification Office, Rotorcraft Directorate, FAA, 2601 Meacham Blvd., Fort Worth, Texas 76137; telephone (817) 222–5170; email *7-avs-asw-170@faa.gov.*

SUPPLEMENTARY INFORMATION:

Discussion

On November 26, 2008, at 73 FR 71952, the **Federal Register** published our notice of proposed rulemaking (NPRM), which proposed to amend 14 CFR part 39 to include an AD that would apply to Erickson Model S–64F helicopters with a transition fitting, part number (P/N) 6420–66341–101, –102, –103, or –104; bulkhead assembly, P/N 6420–66340–041, –043, or –044; or a strap, P/N 6420–66301–119 or –127, installed. That NPRM proposed to require inspecting for cracking or working rivets in each transition fitting, the bulkhead assembly, the strap, and the attaching rotary rudder boom and pylon structure, and repairing or replacing any cracked or damaged part with an airworthy part. The NPRM also proposed to require, for any part where you could not visually determine that a crack does not exist, inspecting using a 10-power or higher magnifying glass. If you could not determine that a crack does not exist in the part after inspecting it with a 10-power or higher magnifying glass, the NPRM proposed to require performing a fluorescent particle inspection (FPI) of any part other than a strap, and performing a magnetic particle inspection (MPI) of any strap. The NPRM also proposed to require replacing any loose or working rivet. The proposed requirements were intended to detect cracking in the rotary rudder boom or pylon due to fatigue, and to prevent failure from static overload and subsequent loss of control of the helicopter.

Comments

After our NPRM (73 FR 71952, November 26, 2008) was published, we received comments from one commenter.

Request

A commenter from Erickson Air-Crane asked that we delete the bulkhead assembly, P/N 6420–66340–041, from the applicability and compliance section of the NPRM (73 FR 71952, November 26, 2008) since that P/N is not used on Erickson Model S–64F helicopters. We agree and have revised this AD accordingly.

The commenter also asked that we delete the words ''other than a strap'' from the requirement to perform an FPI on a part other than a strap if you cannot determine that a crack does not exist, and delete the entire requirement to perform an MPI of the strap if you cannot determine that a crack does not exist. The commenter states that an MPI cannot be performed on the strap when it is installed on a helicopter; instead an FPI of the strap would need to be performed with the other parts. We partially agree. We agree that an MPI cannot be performed on the strap while it is installed on the helicopter because the strap is attached to the aluminum pylon section. An MPI for the strap was initially proposed in the NPRM (73 FR 71952, November 26, 2008) because this would be the type of inspection normally used for a steel part. Instead of changing the MPI on the strap to an FPI as requested, after further review, we determined that deleting this inspection, as well as the magnifying glass inspection and certain FPIs that were proposed in the NPRM, will not impact the overall level of safety. These inspections were included in the event a visual inspection was insufficient to determine whether a crack exists. If any additional inspections are necessary to determine if a crack exists, a qualified individual performing the inspection must make this determination.

FAA's Determination

We have reviewed the relevant information, considered the comments received, and determined that an unsafe condition exists and is likely to exist or develop on other products of the same type design and that air safety and the public interest require adopting the AD requirements as proposed with the changes described previously and minor editorial changes. We have also revised the estimated costs of complying with this AD to reflect an average labor rate of $85 per work-hour instead of $80 per work-hour. These changes are consistent with the intent of the proposals in the NPRM (73 FR 71952, November 26, 2008) and will not increase the economic burden on any operator nor increase the scope of the AD.

Related Service Information

We have reviewed Erickson Service Bulletin (SB) No. 64B20–6, Revision A, dated December 12, 2007, which describes procedures for inspecting the transition fittings, the bulkhead assembly, the strap, and the attaching rotary rudder boom and pylon structure for cracking or working rivets. We have also reviewed Erickson SB No. 64F General-3, Revision C, dated December 12, 2007, which summarizes a listing of a portion of the Model S–64F helicopter components, their part numbers, and the corresponding SBs to use when performing the structural inspections.

Costs of Compliance

We estimate that this AD will affect 7 helicopters of U.S. Registry. We estimate that operators may incur the following costs in order to comply with this AD. It will take about 0.75 work-hour to visually inspect the transition fittings, skin panels, the bulkhead assembly, strap, and pylon exterior in the strap area; we estimate 30 of these visual inspections per year. It will take about 0.50 work-hour to visually inspect the pylon interior in the strap area; we estimate 4 of these visual inspections per year. It will take about 0.75 work-hour to visually and fluorescent penetrant inspect the skin panels at the transition fitting; we estimate performing these inspections 1 time per year. It will take about 40 work-hours to repair a pylon structural assembly. The average labor rate is $85 per work-hour and the cost for required parts to repair a pylon structural assembly is approximately $50,000. Based on these figures, we estimate the annual cost of the inspections will be $2,146 per helicopter and $15,024 for the fleet on

U.S. operators. The estimated cost to repair a pylon structural assembly, including the cost for replacement parts and labor, is $53,400.

Authority for This Rulemaking

Title 49 of the United States Code specifies the FAA's authority to issue rules on aviation safety. Subtitle I, section 106, describes the authority of the FAA Administrator. Subtitle VII: Aviation Programs, describes in more detail the scope of the Agency's authority.

We are issuing this rulemaking under the authority described in Subtitle VII, Part A, Subpart III, Section 44701: ''General requirements.'' Under that section, Congress charges the FAA with promoting safe flight of civil aircraft in air commerce by prescribing regulations for practices, methods, and procedures the Administrator finds necessary for safety in air commerce. This regulation is within the scope of that authority because it addresses an unsafe condition that is likely to exist or develop on products identified in this rulemaking action.

Regulatory Findings

This AD will not have federalism implications under Executive Order 13132. This AD will not have a substantial direct effect on the States, on the relationship between the national government and the States, or on the distribution of power and responsibilities among the various levels of government.

For the reasons discussed above, I certify that this AD:

(1) Is not a ''significant regulatory action'' under Executive Order 12866;

(2) Is not a ''significant rule'' under DOT Regulatory Policies and Procedures (44 FR 11034, February 26, 1979);

(3) Will not affect intrastate aviation in Alaska to the extent that it justifies making a regulatory distinction; and

(4) Will not have a significant economic impact, positive or negative, on a substantial number of small entities under the criteria of the Regulatory Flexibility Act.

We prepared an economic evaluation of the estimated costs to comply with this AD and placed it in the AD docket.

List of Subjects in 14 CFR Part 39

Air transportation, Aircraft, Aviation safety, Incorporation by reference, Safety.

Adoption of the Amendment

Accordingly, under the authority delegated to me by the Administrator, the FAA amends 14 CFR part 39 as follows:

PART 39—AIRWORTHINESS DIRECTIVES

■ 1. The authority citation for part 39 continues to read as follows:

Authority: 49 U.S.C. 106(g), 40113, 44701.

§ 39.13 [Amended]

■ 2. The FAA amends § 39.13 by adding the following new airworthiness directive (AD):

2012–23–11 Erickson Air-Crane Incorporated: Amendment 39–17267; Docket No. FAA–2008–1243; Directorate Identifier 2007–SW–03–AD.

(a) Applicability

This AD applies to Erickson Air-Crane Incorporated (Erickson) Model S–64F helicopters with a left or right splice fitting (transition fitting), part number (P/N) 6420–66341–101, –102, –103, or –104; pylon bulkhead assembly-canted (bulkhead assembly), P/N 6420–66340–043 or –044; or a pylon steel strap (strap), P/N 6420–66301–119 or –127, installed, certificated in any category.

(b) Unsafe Condition

This AD defines the unsafe condition as cracking in the rotary rudder boom or pylon due to fatigue, failure from static overload, and subsequent loss of control of the helicopter.

(c) Effective Date

This AD becomes effective January 14, 2013.

(d) Compliance

You are responsible for performing each action required by this AD within the specified compliance time unless it has already been accomplished prior to that time.

(e) Required Actions

(1) Within 20 hours time-in-service (TIS), and thereafter at intervals not to exceed 20 hours (TIS):

(i) Visually inspect each transition fitting, P/N 6420–66341–101, –102, –103, or –104, for a crack or working rivets on the inboard face of the rotary rudder boom and pylon, paying particular attention to the fastener attachment holes, as depicted in Figure 1, Detail A, of the Accomplishment Instructions in Erickson Air-Crane Incorporated Service Bulletin No. 64B20–6, Revision A, dated December 12, 2007 (SB).

(ii) Visually inspect the outboard face of each rotary rudder boom and pylon skin panel (skin panel) that attaches to the transition fittings for a crack or working rivets in the transition fitting attachment areas, paying particular attention to the fastener attachment holes, as shown in Figure 1, Detail B, of the Accomplishment Instructions in the SB.

(iii) Visually inspect the forward and aft sides of each bulkhead assembly, P/N 6420–66340–043 or –044, for a crack. Pay particular attention to the circled areas shown in Figure 2 of the Accomplishment Instructions in the SB.

(iv) Visually inspect the upper 12 inches of each strap, P/N 6420–66301–119 or –127, for a crack or for working rivets as shown in Figure 3 of the Accomplishment Instructions in the SB.

(v) Visually inspect the pylon for a crack or working rivets on each side of the upper 12 inches of the strap, and also 6 inches above the end of the strap as shown in Figure 3 of the Accomplishment Instructions in the SB.

(2) For any pylon with a strap installed, within 155 hours TIS, and thereafter at intervals not to exceed 155 hours TIS, remove the inspection access covers, P/N 6420–66304–109 and P/N 6420–66303–125, on the forward and aft sides of the pylon and visually inspect the left-hand cap angle (longeron), P/N 6420–66304–136, and the interior area of the pylon adjacent to the upper 12 inches of the strap, as well as 6 inches above the end of the strap, for a crack or working rivets, as shown in Figure 3 of the Accomplishment Instructions in the SB.

(3) At each transition fitting replacement, which is required at intervals not to exceed 8,300 hours TIS:

(i) With each transition fitting removed, visually inspect both sides of each skin panel for a crack in the areas to which the transition fitting attaches, paying particular attention to the fastener attachment holes, as depicted in Details A and B, Figure 1, of the Accomplishment Instructions in the SB.

(ii) Perform a fluorescent penetrant inspection of each skin panel for a crack in the areas around the fastener holes where the transition fittings attach to the rotary rudder boom and pylon.

(4) If there is a crack, before further flight, replace any cracked part with an airworthy part, or repair the cracked part if the damage is within the maximum repair damage limits.

Note to paragraph (e)(4) of this AD: The maximum repair damage limitations are stated in the applicable Component and Repair Overhaul Manual.

(5) If any loose or working rivets are found, before further flight, remove the rivets and visually inspect the fastener holes and surrounding area for a crack or any other damage. Replace any part that is cracked with an airworthy part; replace any damaged part with damage exceeding the maximum repair damage limits with an airworthy part; or repair any damaged part that is within the maximum repair damage limits. Also, replace any loose or working rivets.

(f) Special Flight Permits

Special flight permits may be issued in accordance with 14 CFR 21.197 and 21.199 to operate the helicopter to a location where the inspection requirements of this AD can be accomplished. No special flight permits will be issued to accomplish replacements or repairs, or if a crack is suspected.

(g) Alternative Methods of Compliance (AMOCs)

(1) The Manager, Rotorcraft Certification Office, FAA, may approve AMOCs for this AD. Send your proposal to: Michael Kohner, Aviation Safety Engineer, Rotorcraft Certification Office, Rotorcraft Directorate, FAA, 2601 Meacham Blvd., Fort Worth, Texas 76137; telephone (817) 222–5170; email *7-avs-asw-170@faa.gov.*

(2) For operations conducted under a 14 CFR part 119 operating certificate or under 14 CFR part 91, subpart K, we suggest that you notify your principal inspector, or lacking a principal inspector, the manager of the local flight standards district office or certificate holding district office before operating any aircraft complying with this AD through an AMOC.

(h) Additional Information

Erickson Air-Crane Service Bulletin No. 64F General-3, Revision C, dated December 12, 2007, which is not incorporated by reference, contains additional information about the subject of this AD. For this service information, contact Erickson Air-Crane Incorporated, ATTN: Chris Erickson/Compliance Officer, 3100 Willow Springs Rd., P.O. Box 3247, Central Point, OR 97502; telephone (541) 664–5544; fax (541) 664–2312; email *cerickson@ericksonaircrane.com*. You may also review this service information at the FAA, Office of the Regional Counsel, Southwest Region, 2601 Meacham Blvd., Room 663, Fort Worth, Texas 76137.

(i) Subject

Joint Aircraft Service Component (JASC) Code: 5302, Rotorcraft Tail Boom.

(j) Material Incorporated by Reference

(1) The Director of the **Federal Register** approved the incorporation by reference (IBR) of the service information listed in this paragraph under 5 U.S.C. 552(a) and 1 CFR part 51.

(2) You must use this service information as applicable to do the actions required by this AD, unless the AD specifies otherwise.

(i) Erickson Air-Crane Incorporated Service Bulletin No. 64B20–6, Revision A, dated December 12, 2007.

(ii) Reserved.

(3) For Erickson Air-Crane Incorporated service information identified in this AD, contact Erickson Air-Crane Incorporated, ATTN: Chris Erickson/Compliance Officer, 3100 Willow Springs Rd., P.O. Box 3247, Central Point, OR 97502; telephone (541) 664–5544; fax (541) 664–2312; email *cerickson@ericksonaircrane.com*.

(4) You may view this service information at FAA, Office of the Regional Counsel, Southwest Region, 2601 Meacham Blvd., Room 663, Fort Worth, Texas 76137. For information on the availability of this material at the FAA, call (817) 222–5110.

(5) You may view this service information that is incorporated by reference at the National Archives and Records Administration (NARA). For information on the availability of this material at NARA, call (202) 741–6030, or go to: *http://www.archives.gov/federal-register/cfr/ibr-locations.html*.

Issued in Fort Worth, Texas, on November 13, 2012.

Kim Smith,

Directorate Manager, Rotorcraft Directorate, Aircraft Certification Service.

[FR Doc. 2012–28434 Filed 12–7–12; 8:45 am]

BILLING CODE 4910–13–P

DEPARTMENT OF TRANSPORTATION

Federal Aviation Administration

14 CFR Part 39

[Docket No. FAA–2012–1117; Directorate Identifier 2012–NE–25–AD; Amendment 39–17275; AD 2012–24–05]

RIN 2120–AA64

Airworthiness Directives; Rolls-Royce plc Turbofan Engines

AGENCY: Federal Aviation Administration (FAA), DOT.

ACTION: Final rule; request for comments.

SUMMARY: We are adopting a new airworthiness directive (AD) for certain Rolls-Royce plc (RR) RB211-Trent 900 series turbofan engines. This AD requires inspection of the low pressure turbine (LPT) bearing housing end cover assembly in certain engines and, if necessary, its replacement. This AD was prompted by a Trent 900 engine experiencing a high intermediate pressure vibration fault, along with other fluctuating engine parameters, while in flight. We are issuing this AD to prevent fracture of the oil transfer tube, which could result in uncontained failure of the engine and damage to the airplane.

DATES: This AD becomes effective December 26, 2012.

We must receive comments on this AD by January 24, 2013.

The Director of the **Federal Register** approved the incorporation by reference of certain publications listed in the AD as of December 26, 2012.

ADDRESSES: You may send comments by any of the following methods:

- Federal eRulemaking Portal: Go to *http://www.regulations.gov* and follow the instructions for sending your comments electronically.
- Mail: U.S. Department of Transportation, 1200 New Jersey Avenue SE., West Building Ground Floor, Room W12–140, Washington, DC 20590–0001.
- Hand Delivery: Deliver to Mail address above between 9 a.m. and 5 p.m., Monday through Friday, except Federal holidays.
- Fax: (202) 493–2251.

For service information identified in this AD, contact Rolls-Royce plc, Corporate Communications, P.O. Box 31, Derby, England, DE248BJ; phone: 011–44–1332–242424; fax: 011–44–1332–245418 or email from *http://www.rolls-royce.com/contact/civil_team.jsp,* or download the publication from *https://www.aeromanager.com.* You may view this service information at the FAA, Engine & Propeller Directorate, 12 New England Executive Park, Burlington, MA 01803. For information on the availability of this material at the FAA, call 781–238–7125.

Examining the AD Docket

You may examine the AD docket on the Internet at *http://www.regulations.gov;* or in person at the Docket Operations office between 9 a.m. and 5 p.m., Monday through Friday, except Federal holidays. The AD docket contains this AD, the regulatory evaluation, any comments received, and other information. The street address for the Docket Operations office (phone: (800) 647–5527) is the same as the Mail address provided in the **ADDRESSES** section. Comments will be available in the AD docket shortly after receipt.

FOR FURTHER INFORMATION CONTACT: Alan Strom, Aerospace Engineer, Engine Certification Office, FAA, Engine & Propeller Directorate, 12 New England Executive Park, Burlington, MA 01803; phone: 781–238–7143; fax: 781–238–7199; email: *alan.strom@faa.gov.*

SUPPLEMENTARY INFORMATION:

Discussion

The European Aviation Safety Agency (EASA), which is the Technical Agent for the Member States of the European Community, has issued EASA Airworthiness Directive AD No. 2012–0145, dated August 6, 2012 (referred to after this as ''the MCAI''), to correct an unsafe condition for the specified products. The MCAI states:

> During a revenue service flight, a Trent 900 engine experienced a high Intermediate Pressure (IP/N2) vibration fault along with several other fluctuating engine parameters, including Low Pressure (LP/N1) faults. The flight crew decided to throttle back the engine to idle and performed an air turn back. The other engines continued to operate normally and an uneventful landing was made.
>
> The results of an initial investigation revealed that the LP system was seized. Removal of the Low Pressure Turbine (LPT) bearing housing end cover revealed that the oil transfer tube assembly had fractured because the spherical seat between the oil transfer tube and the end cover was missing (not installed).
>
> This non-conformity caused the fracture of the oil transfer tube, leading to reduced oil flow and subsequent damage to the LP and IP bearings. Rolls-Royce has identified that other Trent 900 engines could potentially be affected.

The in-service event engine was assembled at the factory by RR. After the in-service event, RR inspected all LPT bearing housing end cover assemblies

they had assembled and found one other assembly with a missing spherical seat. RR estimates that up to 200 LPT bearing housing end cover assemblies assembled using this procedure may have been built without the spherical seat. We are issuing this AD to prevent fracture of the oil transfer tube, which could result in uncontained failure of the engine and damage to the airplane. You may obtain further information by examining the MCAI in the AD docket.

Relevant Service Information

Rolls-Royce has issued Alert Non-Modification Service Bulletin Alert (NMSB) RB.211–72–AH051, dated August 3, 2012, or Revision 1, dated September 11, 2012, and NMSB RB.211–72–H056, dated August 3, 2012, or Revision 1, dated September 11, 2012. The actions described in this service information are intended to correct the unsafe condition identified in the MCAI.

FAA's Determination and Requirements of This AD

This product has been approved by the United Kingdom and is approved for operation in the United States. Pursuant to our bilateral agreement with the European Community, EASA has notified us of the unsafe condition described in the MCAI and service information referenced above. We are issuing this AD because we evaluated all information provided by EASA and determined the unsafe condition exists and is likely to exist or develop on other products of the same type design.

FAA's Determination of the Effective Date

An unsafe condition exists that requires the immediate adoption of this AD. The FAA has found that notice and comment prior to adoption of this rule is unnecessary because no engines are used on U.S. registered airplanes. Therefore, we find that good cause exists for making this amendment effective in less than 30 days.

Comments Invited

This AD is a final rule that involves requirements affecting flight safety, and we did not precede it by notice and opportunity for public comment. We invite you to send any written relevant data, views, or arguments about this AD. Send your comments to an address listed under the **ADDRESSES** section. Include ''Docket No. FAA–2012–1117; Directorate Identifier 2012–NE–25–AD'' at the beginning of your comments. We specifically invite comments on the overall regulatory, economic, environmental, and energy aspects of this AD. We will consider all comments received by the closing date and may amend this AD because of those comments.

We will post all comments we receive, without change, to *http://www.regulations.gov,* including any personal information you provide. We will also post a report summarizing each substantive verbal contact with FAA personnel concerning this AD. Using the search function of the Web site, anyone can find and read the comments in any of our dockets, including, if provided, the name of the individual who sent the comment (or signed the comment on behalf of an association, business, labor union, etc.). You may review the DOT's complete Privacy Act Statement in the **Federal Register** published on April 11, 2000 (65 FR 19477–78).

Authority for This Rulemaking

Title 49 of the United States Code specifies the FAA's authority to issue rules on aviation safety. Subtitle I, section 106, describes the authority of the FAA Administrator. ''Subtitle VII: Aviation Programs,'' describes in more detail the scope of the Agency's authority.

We are issuing this rulemaking under the authority described in ''Subtitle VII, Part A, Subpart III, Section 44701: General requirements.'' Under that section, Congress charges the FAA with promoting safe flight of civil aircraft in air commerce by prescribing regulations for practices, methods, and procedures the Administrator finds necessary for safety in air commerce. This regulation is within the scope of that authority because it addresses an unsafe condition that is likely to exist or develop on products identified in this rulemaking action.

Regulatory Findings

We determined that this AD will not have federalism implications under Executive Order 13132. This AD will not have a substantial direct effect on the States, on the relationship between the national government and the States, or on the distribution of power and responsibilities among the various levels of government.

For the reasons discussed above, I certify this AD:

1. Is not a ''significant regulatory action'' under Executive Order 12866;

2. Is not a ''significant rule'' under the DOT Regulatory Policies and Procedures (44 FR 11034, February 26, 1979); and

3. Will not have a significant economic impact, positive or negative, on a substantial number of small entities under the criteria of the Regulatory Flexibility Act.

We prepared a regulatory evaluation of the estimated costs to comply with this AD and placed it in the AD docket.

List of Subjects in 14 CFR Part 39

Air transportation, Aircraft, Aviation safety, Incorporation by reference, Safety.

Adoption of the Amendment

Accordingly, under the authority delegated to me by the Administrator, the FAA amends 14 CFR part 39 as follows:

PART 39—AIRWORTHINESS DIRECTIVES

■ 1. The authority citation for part 39 continues to read as follows:

Authority: 49 U.S.C. 106(g), 40113, 44701.

§ 39.13 [Amended]

■ 2. The FAA amends § 39.13 by adding the following new AD:

2012–24–05 Rolls-Royce plc: Amendment 39–17275; Docket No. FAA–2012–1117; Directorate Identifier 2012–NE–25–AD.

(a) Effective Date

This airworthiness directive (AD) becomes effective December 26, 2012.

(b) Affected ADs

None.

(c) Applicability

This AD applies to Rolls-Royce plc (RR) RB211-Trent 970–84 and 972–84 series turbofan engines, all serial numbers.

(d) Reason

This AD was prompted by a Trent 900 engine experiencing a high intermediate pressure vibration fault, along with other fluctuating engine parameters, while in flight. We are issuing this AD to prevent fracture of the oil transfer tube, which could result in uncontained failure of the engine and damage to the airplane.

(e) Actions and Compliance

Before further flight, unless already done, do the following:

(1) Use paragraph 1.A. of RR Alert Non-Modification Service Bulletin (NMSB) RB.211–72–AH051, dated August 3, 2012, or Revision 1, dated September 11, 2012, and RR NMSB RB.211–72–H056, dated August 3, 2012, or Revision 1, dated September 11, 2012, to determine which engine serial numbers to inspect.

(2) Inspect the LPT bearing housing end cover assembly for the presence of a spherical seat, P/N CU38971. For guidance on performing the inspection, see paragraphs 3.A.(5) through 3.A.(8) of the SBs listed in paragraph (e)(1) of this AD.

(3) If, during the inspection required by paragraph (e)(2) of this AD, you find that spherical seat, P/N CU38971, is missing, replace the LPT bearing housing end cover assembly, P/N FW22780, with a part eligible for installation.

(f) Installation Prohibition

After the effective date of this AD:

(1) Do not approve for return to service any airplane with an engine, affected by this AD, installed, unless the engine has passed the inspection required by paragraph (e)(2) of this AD.

(2) Do not install an LPT bearing housing end cover assembly, P/N FW22780, onto any engine required to be inspected by this AD, unless the LPT bearing housing end cover assembly was inspected as required by this AD.

(g) Credit for Previous Actions

If you accomplished the actions required by paragraph (e) of this AD before the effective date of this AD using RR Technical Variance (TV) 125436, issue 2, dated July 27, 2012, you met the requirements of paragraph (e) of this AD.

(h) Alternative Methods of Compliance (AMOCs)

The Manager, Engine Certification Office, FAA, may approve AMOCs to this AD. Use the procedures found in 14 CFR 39.19 to make your request.

(i) Related Information

(1) For more information about this AD, contact Alan Strom, Aerospace Engineer, Engine Certification Office, FAA, Engine & Propeller Directorate, 12 New England Executive Park, Burlington, MA 01803; phone: 781–238–7143; fax: 781–238–7199; email: *alan.strom@faa.gov*.

(2) Refer to European Aviation Safety Agency Airworthiness Directive 2012–0145, dated August 6, 2012, for related information.

(j) Material Incorporated by Reference

(1) The Director of the **Federal Register** approved the incorporation by reference (IBR) of the following service information under 5 U.S.C. 552(a) and 1 CFR part 51.

(2) You must use the following service information to do the actions required by this AD, unless the AD specifies otherwise:

(i) Rolls-Royce (RR) Alert Non-Modification Service Bulletin (NMSB) RB.211–72–AH051, dated August 3, 2012.

(ii) RR Alert NMSB RB.211–72–AH051, Revision 1, dated September 11, 2012.

(iii) RR NMSB RB.211–72–H056, dated August 3, 2012.

(iv) RR NMSB RB.211–72–H056, Revision 1, dated September 11, 2012.

(3) For service information identified in this AD, contact Rolls-Royce plc, Corporate Communications, P.O. Box 31, Derby, England, DE248BJ; phone: 011–44–1332–242424; fax: 011–44–1332–245418, email: *http://www.rolls-royce.com/contact/civil_team.jsp,* or download the publication from *https://www.aeromanager.com*.

(4) You may view this service information at the FAA, Engine & Propeller Directorate, 12 New England Executive Park, Burlington, MA. For information on the availability of this material at the FAA, call 781–238–7125.

(5) You may view this service information at the National Archives and Records Administration (NARA). For information on the availability of this material at NARA, call 202–741–6030, or go to: *http://www.archives.gov/federal-register/cfr/ibr-locations.html*.

Issued in Burlington, Massachusetts, on November 26, 2012.

Colleen M. D'Alessandro,

Assistant Manager, Engine & Propeller Directorate, Aircraft Certification Service.

[FR Doc. 2012–29489 Filed 12–7–12; 8:45 am]

BILLING CODE 4910–13–P

DEPARTMENT OF TRANSPORTATION

Federal Aviation Administration

14 CFR Part 39

[Docket No. FAA–2012–0590; Directorate Identifier 2011–NM–112–AD; Amendment 39–17265; AD 2012–23–09]

RIN 2120–AA64

Airworthiness Directives; Embraer S.A. Airplanes

AGENCY: Federal Aviation Administration (FAA), Department of Transportation (DOT).

ACTION: Final rule.

SUMMARY: We are superseding an existing airworthiness directive (AD) for all Embraer S.A. Model ERJ 190–100 STD, –100 LR, –100 IGW, –200 STD, –200 LR, and –200 IGW airplanes. That AD currently requires revising the maintenance program to incorporate modifications in the Airworthiness Limitation Section (ALS) of the EMBRAER ERJ 190 Maintenance Review Board Report (MRBR). This new AD requires revising the maintenance program to incorporate modifications in the ALS of the EMBRAER ERJ 190 MRBR to include new inspection tasks and their respective thresholds and intervals. This AD was prompted by issuance of new inspection tasks and their respective thresholds and intervals. We are issuing this AD since failure to inspect these structural components according to the new ALS tasks, thresholds, and intervals could prevent a timely detection of fatigue cracking, which if not properly addressed, could result in reduced structural integrity of the airplane.

DATES: This AD becomes effective January 14, 2013.

The Director of the Federal Register approved the incorporation by reference of certain publications listed in this AD as of January 14, 2013.

The Director of the Federal Register approved the incorporation by reference of certain publications listed in this AD as of July 6, 2010 (75 FR 30277, June 1, 2010).

ADDRESSES: You may examine the AD docket on the Internet at *http://www.regulations.gov* or in person at the U.S. Department of Transportation, Docket Operations, M–30, West Building Ground Floor, Room W12–140, 1200 New Jersey Avenue SE., Washington, DC.

FOR FURTHER INFORMATION CONTACT: Cindy Ashforth, Aerospace Engineer, International Branch, ANM–116, Transport Airplane Directorate, FAA, 1601 Lind Avenue SW., Renton, WA 98057–3356; telephone (425) 227–2768; fax (425) 227–1149.

SUPPLEMENTARY INFORMATION:

Discussion

We issued a notice of proposed rulemaking (NPRM) to amend 14 CFR part 39 to include an AD that would apply to the specified products. That NPRM was published in the **Federal Register** on June 6, 2012 (77 FR 33334), and proposed to supersede AD 2010–11–14, Amendment 39–16319 (75 FR 30277, June 1, 2010). That NPRM proposed to correct an unsafe condition for the specified products. The MCAI states:

> During the airplane full scale fatigue test, cracks were found in some structural components of the airplane. Analysis of these cracks resulted in modifications on the Airworthiness Limitation Section (ALS) of Embraer ERJ 190 Maintenance Review Board Report (MRBR), to include new inspections tasks and its respective thresholds and intervals.
>
> Failure to inspect these structural components, according to the new tasks, thresholds and intervals, could prevent a timely detection of fatigue cracking. These cracks, if not properly addressed, could adversely affect the structural integrity of the airplane.
>
> Since this condition may occur in other airplanes of the same type and affects flight safety, a corrective action is required. Thus, sufficient reason exists to request compliance with this [Agência Nacional de Aviação Civil (ANAC)] AD in the indicated time limit.

You may obtain further information by examining the MCAI in the AD docket.

Comments

We gave the public the opportunity to participate in developing this AD. We have considered the comments received.

Request To Incorporate New and Revised Structural Airworthiness Limitations

Embraer requested that we include EMBRAER Temporary Revision (TR) 5–5, dated May 24, 2012; and EMBRAER TR 5–7, dated August 12, 2012; to Appendix A, Part 2, Airworthiness Limitation Inspections (ALI)—Structures, of the EMBRAER 190 MRBR, MRB–1928, in the operators'

maintenance programs. Embraer points out that those TRs include additional maintenance tasks that were approved in recent design changes, which identify and mitigate potential premature structural cracks.

We disagree. There have been numerous changes to the structural inspection requirements intended to identify potential premature cracks since the last structural airworthiness limitations (EMBRAER TR 2–5, dated December 6, 2007; and EMBRAER TR 2–6, dated February 12, 2008; to Appendix A, Part 2, Airworthiness Limitation Inspections (ALI) –Structures, of the EMBRAER 190 MRBR, MRB–1928 were mandated in FAA AD 2010–11–14, Amendment 39–16319 (75 FR 30277, June 1, 2010).

The requested changes would alter the actions currently required by this AD, so additional rulemaking would be required. We find that delaying this action would be inappropriate in light of the identified unsafe condition.

In addition, we have contacted the ANAC, the aviation authority for Brazil. ANAC has indicated it intends to mandate the maintenance actions in Appendix A, Parts I, II, and IV of EMBRAER 190 MRBR, MRB–1928, Revision 5, dated November 11, 2010; including EMBRAER TR 5–3, dated November 11, 2010; and EMBRAER TR 5–6, dated November 11, 2010, in addition to the TRs referred to by the commenter. These new maintenance actions include certification maintenance requirements (CMRs) and life-limited parts, in addition to the structural inspections from the TRs referred to by the commenter. As we stated previously, we consider that to delay this AD action would be inappropriate, since we have determined that an unsafe condition exists. When ANAC issues mandatory continued airworthiness instructions that encompass all appropriate airworthiness limitations, including the commenter's recommended action, we might consider additional rulemaking. We have not changed the AD in this regard.

Explanation of Changes Made to This AD

We have deleted Note 1 to paragraph (g)(1) of the NPRM (77 FR 33334, June 6, 2012). Instead, we have added the same information in paragraph (g)(2) of this AD.

We also revised the compliance times specified in table 1 to paragraph (g)(1) of this AD to correctly identify the effective date of AD 2010–11–14, Amendment 39–16319 (75 FR 30277, June 1, 2010).

Conclusion

We reviewed the available data, including the comment received, and determined that air safety and the public interest require adopting the AD with the changes described previously and minor editorial changes. We have determined that these minor changes:

- Are consistent with the intent that was proposed in the NPRM (77 FR 33334, June 6, 2012) for correcting the unsafe condition; and
- Do not add any additional burden upon the public than was already proposed in the NPRM (77 FR 33334, June 6, 2012).

Costs of Compliance

We estimate that this AD will affect about 88 products of U.S. registry.

The actions that are required by AD 2010–11–14, Amendment 39–16319 (75 FR 30277, June 1, 2010), and retained in this AD take about 1 work-hour per product, at an average labor rate of $85 per work-hour. Based on these figures, the estimated cost of the currently required actions is $85 per product.

We estimate that it will take about 1 work-hour per product to comply with the new basic requirements of this AD. The average labor rate is $85 per work-hour. Based on these figures, we estimate the cost of this AD to the U.S. operators to be $7,480, or $85 per product.

Authority for This Rulemaking

Title 49 of the United States Code specifies the FAA's authority to issue rules on aviation safety. Subtitle I, section 106, describes the authority of the FAA Administrator. ''Subtitle VII: Aviation Programs,'' describes in more detail the scope of the Agency's authority.

We are issuing this rulemaking under the authority described in ''Subtitle VII, Part A, Subpart III, Section 44701: General requirements.'' Under that section, Congress charges the FAA with promoting safe flight of civil aircraft in air commerce by prescribing regulations for practices, methods, and procedures the Administrator finds necessary for safety in air commerce. This regulation is within the scope of that authority because it addresses an unsafe condition that is likely to exist or develop on products identified in this rulemaking action.

Regulatory Findings

We determined that this AD will not have federalism implications under Executive Order 13132. This AD will not have a substantial direct effect on the States, on the relationship between the national government and the States, or on the distribution of power and responsibilities among the various levels of government.

For the reasons discussed above, I certify that this AD:

1. Is not a ''significant regulatory action'' under Executive Order 12866;

2. Is not a ''significant rule'' under the DOT Regulatory Policies and Procedures (44 FR 11034, February 26, 1979);

3. Will not affect intrastate aviation in Alaska; and

4. Will not have a significant economic impact, positive or negative, on a substantial number of small entities under the criteria of the Regulatory Flexibility Act.

We prepared a regulatory evaluation of the estimated costs to comply with this AD and placed it in the AD docket.

Examining the AD Docket

You may examine the AD docket on the Internet at *http://www.regulations.gov;* or in person at the Docket Operations office between 9 a.m. and 5 p.m., Monday through Friday, except Federal holidays. The AD docket contains the NPRM (77 FR 33334, June 6, 2012), the regulatory evaluation, any comments received, and other information. The street address for the Docket Operations office (telephone (800) 647–5527) is in the **ADDRESSES** section. Comments will be available in the AD docket shortly after receipt.

List of Subjects in 14 CFR Part 39

Air transportation, Aircraft, Aviation safety, Incorporation by reference, Safety.

Adoption of the Amendment

Accordingly, under the authority delegated to me by the Administrator, the FAA amends 14 CFR part 39 as follows:

PART 39—AIRWORTHINESS DIRECTIVES

■ 1. The authority citation for part 39 continues to read as follows:

Authority: 49 U.S.C. 106(g), 40113, 44701.

§ 39.13 [Amended]

■ 2. The FAA amends § 39.13 by removing airworthiness directive (AD) 2010–11–14, Amendment 39–16319 (75 FR 30277, June 1, 2010), and adding the following new AD:

2012–23–09 Embraer S.A.: Amendment 39–17265. Docket No. FAA–2012–0590; Directorate Identifier 2011–NM–112–AD.

(a) Effective Date

This airworthiness directive (AD) becomes effective January 14, 2013.

(b) Affected ADs

This AD supersedes AD 2010–11–14, Amendment 39–16319 (75 FR 30277, June 1, 2010).

(c) Applicability

(1) This AD applies to Embraer S.A. Model ERJ 190–100 STD, –100 LR, and –100 IGW airplanes; and Model ERJ 190–200 STD, –200 LR, and –200 IGW airplanes; certificated in any category; all serial numbers.

(2) This AD requires revisions to certain operator maintenance documents to include new actions (e.g., inspections). Compliance with these actions is required by 14 CFR 91.403(c). For airplanes that have been previously modified, altered, or repaired in the areas addressed by this AD, the operator may not be able to accomplish the actions described in the revisions. In this situation, to comply with 14 CFR 91.403(c), the operator must request approval of an alternative method of compliance (AMOC) according to paragraph (j)(1) of this AD. The request should include a description of changes to the required actions that will ensure the continued operational safety of the airplane.

(d) Subject

Air Transport Association (ATA) of America Code 52, Doors; 53, Fuselage; 54, Nacelles/Pylons; 55, Stabilizers; 57, Wings; 71, Powerplant; and 78, Engine Exhaust.

(e) Reason

This AD was prompted by reports of cracks in some of the structural components of the airplane. We are issuing this AD since failure to inspect these structural components according to the new airworthiness limitation section (ALS) tasks, thresholds, and intervals could prevent a timely detection of fatigue cracking, which if not properly addressed, could result in reduced structural integrity of the airplane.

(f) Compliance

You are responsible for having the actions required by this AD performed within the compliance times specified, unless the actions have already been done.

(g) Restated Actions: Revision and Compliance Times

This paragraph restates the actions required by paragraph (f) of AD 2010–11–14, Amendment 39–16319 (75 FR 30277, June 1, 2010).

(1) Within 90 days after July 6, 2010 (the effective date of AD 2010–11–14, Amendment 39–16319 (75 FR 30277, June 1, 2010)), revise the ALS of the Instructions for Continued Airworthiness (ICA) to include the tasks specified in table 1 to paragraph (g)(1) of this AD. These tasks are identified in EMBRAER Temporary Revision (TR) 2–5, dated December 6, 2007; and EMBRAER TR 2–6, dated February 12, 2008; to Appendix A, Part 2, Airworthiness Limitation Inspections (ALI) –Structures, of the EMBRAER 190 Maintenance Review Board Report (MRBR), MRB–1928.

TABLE 1 TO PARAGRAPH (g)(1) OF THIS AD—MRBR TRS AND TASKS, WITH COMPLIANCE TIMES

EMBRAER MRBR TR	Subject	MRBR Task No.	Compliance time
TR 2–5, dated December 6, 2007.	Wing stub main box lower skin and splices—internal.	57–01–002–0002	250 flight cycles after July 6, 2010 (the effective date of AD 2010–11–14, Amendment 39–16319 (75 FR 30277, June 1, 2010)).
TR 2–5, dated December 6, 2007.	Wing stub spar 3—internal/external.	57–01–008–0003	500 flight cycles after July 6, 2010 (the effective date of AD 2010–11–14, Amendment 39–16319 (75 FR 30277, June 1, 2010)).
TR 2–5, dated December 6, 2007.	Wing stub spar 3—external.	57–01–008–0004	500 flight cycles after July 6, 2010 (the effective date of AD 2010–11–14, Amendment 39–16319 (75 FR 30277, June 1, 2010)).
TR 2–5, dated December 6, 2007.	Wing lower skin panel stringers—internal.	57–10–007–0004	500 flight cycles after July 6, 2010 (the effective date of AD 2010–11–14, Amendment 39–16319 (75 FR 30277, June 1, 2010)).
TR 2–5, dated December 6, 2007.	Wing main box rib 11—internal.	57–10–012–0003	500 flight cycles after July 6, 2010 (the effective date of AD 2010–11–14, Amendment 39–16319 (75 FR 30277, June 1, 2010)).
TR 2–6, dated February 12, 2008.	Nose landing gear wheel well metallic structure.	53–10–021–0004	500 flight cycles after July 6, 2010 (the effective date of AD 2010–11–14, Amendment 39–16319 (75 FR 30277, June 1, 2010)).

(2) The actions required by paragraph (g)(1) of this AD may be done by inserting a copy of EMBRAER TR 2–5, dated December 6, 2007; and EMBRAER TR 2–6, dated February 12, 2008; to Appendix A, Part 2, Airworthiness Limitation Inspections (ALI) –Structures, of the EMBRAER 190 MRBR, MRB–1928, into the ALS of the EMBRAER 190 MRBR, MRB–1928. When these TRs have been included in general revisions of the EMBRAER 190 MRBR, MRB–1928, the general revisions may be inserted, provided the relevant information in the general revision is identical to that in EMBRAER TR 2–5, dated December 6, 2007; and EMBRAER TR 2–6, dated February 12, 2008, and these TRs may be removed.

(3) The initial compliance times for the tasks specified in EMBRAER TR 2–5, dated December 6, 2007; and EMBRAER TR 2–6, dated February 12, 2008; to Appendix A, Part 2, Airworthiness Limitation Inspections (ALI)—Structures, of the EMBRAER 190 MRBR, MRB–1928; start at the later of the times specified in paragraphs (g)(3)(i) and (g)(3)(ii) of this AD. For certain tasks, the compliance times depend on the pre-modification and post-modification condition of the associated service bulletin, as specified in the ''Applicability'' column of these TRs.

(i) Within the applicable threshold times specified in the TRs specified in table 1 to paragraph (g)(1) of this AD.

(ii) At the applicable compliance time specified in table 1 to paragraph (g)(1) of this AD.

(iii) Thereafter, except as provided in paragraphs (h) and (j) of this AD, no alternative replacement times or structural inspection intervals may be approved for the tasks specified in the TRs specified in table 1 to paragraph (g)(1) of this AD.

(h) New Requirements of This AD: Revision of the Maintenance Program

Within 90 days after the effective date of this AD, revise the maintenance program to incorporate the tasks specified in Part 2—Airworthiness Limitation Inspections (ALI)—Structures, of Appendix A, Airworthiness Limitations (AL), of the EMBRAER 190 Maintenance Review Board Report, MRB–1928, Revision 5, dated November 11, 2010; and EMBRAER TR 5–1, dated February 11, 2011, to Part 2—Airworthiness Limitation Inspections (ALI)—Structures, of Appendix A, Airworthiness Limitations (AL), of the EMBRAER 190 Maintenance Review Board Report, MRB–1928, Revision 5, dated November 11, 2010; with the thresholds and intervals stated in these documents. The initial compliance times for the tasks are stated in the ''Implementation Plan'' section of Appendix A, Airworthiness Limitations (AL), of the EMBRAER 190 Maintenance Review Board Report, MRB–1928, Revision 5, dated November 11, 2010. Doing the revision required by this paragraph terminates the revision required by paragraph (g) of this AD.

(i) No Alternative Actions or Intervals

After accomplishing the revision required by paragraph (h) of this AD, no alternative actions (e.g., inspections) or intervals, may be used, unless the actions or intervals are approved as an AMOC in accordance with the procedures specified in paragraph (j)(1) of this AD.

(j) Other FAA AD Provisions

The following provisions also apply to this AD:

(1) *Alternative Methods of Compliance (AMOCs):* The Manager, International Branch, ANM–116, Transport Airplane Directorate, FAA, has the authority to approve AMOCs for this AD, if requested using the procedures found in 14 CFR 39.19. In accordance with 14 CFR 39.19, send your request to your principal inspector or local Flight Standards District Office, as appropriate. If sending information directly

to the International Branch, send it to ATTN: Cindy Ashforth, Aerospace Engineer, International Branch, ANM–116, Transport Airplane Directorate, FAA, 1601 Lind Avenue SW., Renton, WA 98057–3356; telephone (425) 227–2768; fax (425) 227–1149. Information may be emailed to: *9-ANM-116-AMOC-REQUESTS@faa.gov.* Before using any approved AMOC, notify your appropriate principal inspector, or lacking a principal inspector, the manager of the local flight standards district office/certificate holding district office. The AMOC approval letter must specifically reference this AD.

(2) *Airworthy Product:* For any requirement in this AD to obtain corrective actions from a manufacturer or other source, use these actions if they are FAA-approved. Corrective actions are considered FAA-approved if they are approved by the State of Design Authority (or their delegated agent). You are required to assure the product is airworthy before it is returned to service.

(k) Related Information

Refer to MCAI Brazilian Airworthiness Directive 2011–05–04, effective June 16, 2011, and the service information specified in paragraphs (k)(1) through (k)(4) of this AD, for related information.

(1) EMBRAER Temporary Revision (TR) 2–5, dated December 6, 2007, to Appendix A, Part 2—Airworthiness Limitation Inspections (ALI)—Structures, of the EMBRAER 190 Maintenance Review Board Report, MRB–1928.

(2) EMBRAER TR 2–6, dated February 12, 2008, to Appendix A, Part 2—Airworthiness Limitation Inspections (ALI)—Structures, of the EMBRAER 190 Maintenance Review Board Report, MRB–1928.

(3) EMBRAER TR 5–1, dated February 11, 2011, to Part 2—Airworthiness Limitation Inspections (ALI)—Structures, of Appendix A, Airworthiness Limitations (AL), of the EMBRAER 190 Maintenance Review Board Report, MRB–1928, Revision 5, dated November 11, 2010.

(4) Part 2—Airworthiness Limitation Inspections (ALI)—Structures, of Appendix A, Airworthiness Limitations (AL), of the EMBRAER 190 Maintenance Review Board Report, MRB–1928, Revision 5, dated November 11, 2010.

(l) Material Incorporated by Reference

(1) The Director of the Federal Register approved the incorporation by reference (IBR) of the service information listed in this paragraph under 5 U.S.C. 552(a) and 1 CFR part 51.

(2) You must use this service information as applicable to do the actions required by this AD, unless the AD specifies otherwise.

(3) The following service information was approved for IBR on January 14, 2013.

(i) EMBRAER Temporary Revision (TR) 5–1, dated February 11, 2011, to Part 2—Airworthiness Limitation Inspections (ALI)—Structures, of Appendix A, Airworthiness Limitations (AL), of the EMBRAER 190 Maintenance Review Board Report, MRB–1928, Revision 5, dated November 11, 2010.

(ii) Appendix A, Airworthiness Limitation (AL), of the EMBRAER 190 Maintenance Review Board Report, MRB–1928, Revision 5, dated November 11, 2010.

(4) The following service information was approved for IBR on July 6, 2012 (75 FR 30277, June 1, 2010).

(i) EMBRAER TR 2–5, dated December 6, 2007, to Appendix A, Part 2—Airworthiness Limitation Inspections (ALI)—Structures of the EMBRAER 190 Maintenance Review Board Report, MRB–1928.

(ii) EMBRAER TR 2–6, dated February 12, 2008, to Appendix A, Part 2—Airworthiness Limitation Inspections (ALI)—Structures of the EMBRAER 190 Maintenance Review Board Report, MRB–1928.

(5) For service information identified in this AD, contact Embraer S.A., Technical Publications Section (PC 060), Av. Brigadeiro Faria Lima, 2170—Putim—12227–901 São Jose dos Campos—SP—BRASIL; telephone +55 12 3927–5852 or +55 12 3309–0732; fax +55 12 3927–7546; email *distrib@embraer.com.br;* Internet *http://www.flyembraer.com.*

(6) You may review copies of the service information at the FAA, Transport Airplane Directorate, 1601 Lind Avenue SW., Renton, WA. For information on the availability of this material at the FAA, call 425–227–1221.

(7) You may view this service information that is incorporated by reference at the National Archives and Records Administration (NARA). For information on the availability of this material at NARA, call 202–741–6030, or go to: *http://www.archives.gov/federal-register/cfr/ibr-locations.html.*

Issued in Renton, Washington, on November 13, 2012.

John P. Piccola,

Acting Manager, Transport Airplane Directorate, Aircraft Certification Service.

[FR Doc. 2012–28173 Filed 12–7–12; 8:45 am]

BILLING CODE 4910–13–P

DEPARTMENT OF TRANSPORTATION

Federal Aviation Administration

14 CFR Part 39

[Docket No. FAA–2012–1135; Directorate Identifier 2012–SW–097–AD; Amendment 39–17281; AD 2012–21–52]

RIN 2120–AA64

Airworthiness Directives; Agusta S.p.A. (Type Certificate Currently Held by AgustaWestland S.p.A.) (Agusta) Helicopters

AGENCY: Federal Aviation Administration (FAA), Department of Transportation (DOT).

ACTION: Final rule; request for comments.

SUMMARY: We are publishing a new airworthiness directive (AD) for Agusta Model AW139 helicopters, which was sent previously to all known U.S. owners and operators of these helicopters. This AD requires inspecting the pilot's and co-pilot's collective and cyclic control sticks for correctly installed attaching hardware. This AD is prompted by a report of an incorrectly installed pilot's collective stick, pilot's cyclic stick, and co-pilot's cyclic stick. These actions are intended to prevent detachment of the cyclic or collective control stick, and subsequent loss of control of the helicopter.

DATES: This AD becomes effective December 26, 2012 to all persons except those persons to whom it was made immediately effective by Emergency AD 2012–21–52, issued on October 23, 2012, which contained the requirements of this AD.

We must receive comments on this AD by February 8, 2013.

ADDRESSES: You may send comments by any of the following methods:

- *Federal eRulemaking Docket:* Go to *http://www.regulations.gov.* Follow the online instructions for sending your comments electronically.
- *Fax:* 202–493–2251.
- *Mail:* Send comments to the U.S. Department of Transportation, Docket Operations, M–30, West Building Ground Floor, Room W12–140, 1200 New Jersey Avenue SE., Washington, DC 20590–0001.
- *Hand Delivery:* Deliver to the ''Mail'' address between 9 a.m. and 5 p.m., Monday through Friday, except Federal holidays.

Examining the AD Docket

You may examine the AD docket on the Internet at *http://www.regulations.gov* or in person at the Docket Operations Office between 9 a.m. and 5 p.m., Monday through Friday, except Federal holidays. The AD docket contains this AD, the economic evaluation, any comments received, and other information. The street address for the Docket Operations Office (telephone 800–647–5527) is in the **ADDRESSES** section. Comments will be available in the AD docket shortly after receipt.

For service information identified in this AD, contact AgustaWestland, Customer Support & Services, Via Per Tornavento 15, 21019 Somma Lombardo (VA) Italy, ATTN: Giovanni Cecchelli; telephone 39–0331–711133; fax 39 0331 711180; or at *http://www.agustawestland.com/technical-bullettins.* You may review the referenced service information at the FAA, Office of the Regional Counsel, Southwest Region, 2601 Meacham Blvd., Room 663, Fort Worth, Texas 76137.

FOR FURTHER INFORMATION CONTACT: Robert Grant, Aviation Safety Engineer,

Safety Management Group, FAA, 2601 Meacham Blvd., Fort Worth, Texas 76137; telephone 817–222–5328; email *robert.grant@faa.gov*.

SUPPLEMENTARY INFORMATION:

Comments Invited

This AD is a final rule that involves requirements affecting flight safety, and we did not provide you with notice and an opportunity to provide your comments prior to it becoming effective. However, we invite you to participate in this rulemaking by submitting written comments, data, or views. We also invite comments relating to the economic, environmental, energy, or federalism impacts that resulted from adopting this AD. The most helpful comments reference a specific portion of the AD, explain the reason for any recommended change, and include supporting data. To ensure the docket does not contain duplicate comments, commenters should send only one copy of written comments, or if comments are filed electronically, commenters should submit them only one time. We will file in the docket all comments that we receive, as well as a report summarizing each substantive public contact with FAA personnel concerning this rulemaking during the comment period. We will consider all the comments we receive and may conduct additional rulemaking based on those comments.

Discussion

On October 23, 2012, we issued Emergency AD 2012–21–52, which requires inspecting the pilot's and co-pilot's collective and cyclic control sticks for correctly installed attaching hardware, and reinstalling the affected stick before further flight if the hardware is not correct. The European Aviation Safety Agency (EASA), which is the Technical Agent for the Member States of the European Union, issued EASA AD No. 2012–0213–E, dated October 16, 2012, to correct an unsafe condition for certain Agusta Model AW139 helicopters. EASA advises that an incident of an incorrectly installed pilot's collective stick, pilot's cyclic stick, and co-pilot's cyclic stick was reported. This condition, if not detected and corrected, could lead to in-flight detachment of the cyclic or collective sticks and subsequent loss of control of the helicopter.

FAA's Determination

These helicopters have been approved by the aviation authority of Italy and are approved for operation in the United States. Pursuant to our bilateral agreement with Italy, EASA, its technical representative, has notified us of the unsafe condition described in the EASA AD. We are issuing this AD because we evaluated all information provided by EASA and determined the unsafe condition exists and is likely to exist or develop on other helicopters of the same type design.

Related Service Information

Agusta has issued Bollettino Tecnico (BT) No. 139–308, dated October 16, 2012. The BT describes procedures to inspect the pilot's and co-pilot's collective and cyclic sticks for the correct installation of bolts, washers, self-locking nuts, cotter pins, ring nuts, and quick-release pins. If any collective or cyclic stick is incorrectly installed, the BT requires reinstalling the affected control stick.

AD Requirements

This AD requires, within 5 hours time-in-service (TIS):

- Inspecting the pilot collective and cyclic control sticks for the correct installation of the attachment bolts, washers, self-locking nuts, and cotter pins. If the installed hardware is not as prescribed in this AD, before further flight, reinstalling the pilot collective or cyclic control stick.
- Inspecting the co-pilot collective and cyclic control sticks for the correct installation of the ring nuts and quick-release pins. If the installed hardware is not as prescribed in this AD, before further flight, reinstalling the co-pilot collective or cyclic control stick.

Differences Between This AD and the EASA AD

The EASA AD allows compliance within 1 week or 5 flight-hours; this AD requires compliance within 5 hours TIS.

Costs of Compliance

We estimate that this AD will affect 45 helicopters of U.S. Registry. We estimate that operators may incur the following costs in order to comply with this AD. Inspecting the pilot's and co-pilot's collective and cyclic stick installation will require about 1 work-hour at an average labor rate of $85 per hour, for a cost per helicopter of $85 and a cost to U.S. operators of $3,825.

Reinstalling a cyclic or collective stick will require about 1 work-hour, at an average labor rate of $85 per hour, for a cost per helicopter of $85.

FAA's Justification and Determination of the Effective Date

Providing an opportunity for public comments prior to adopting these AD requirements would delay implementing the safety actions needed to correct this known unsafe condition. Therefore, we found and continue to find that the risk to the flying public justifies waiving notice and comment prior to the adoption of this rule because the previously described unsafe condition can adversely affect the controllability of the helicopter and the required corrective actions must be accomplished within 5 hours TIS.

Since it was found that immediate corrective action was required, notice and opportunity for prior public comment before issuing this AD were impracticable and contrary to the public interest and good cause existed to make the AD effective immediately by Emergency AD 2012–21–52, issued on October 23, 2012 to all known U.S. owners and operators of these helicopters. These conditions still exist and the AD is hereby published in the **Federal Register** as an amendment to section 39.13 of the Federal Aviation Regulations (14 CFR 39.13) to make it effective to all persons.

Authority for This Rulemaking

Title 49 of the United States Code specifies the FAA's authority to issue rules on aviation safety. Subtitle I, section 106, describes the authority of the FAA Administrator. ''Subtitle VII: Aviation Programs,'' describes in more detail the scope of the Agency's authority.

We are issuing this rulemaking under the authority described in ''Subtitle VII, Part A, Subpart III, Section 44701: General requirements.'' Under that section, Congress charges the FAA with promoting safe flight of civil aircraft in air commerce by prescribing regulations for practices, methods, and procedures the Administrator finds necessary for safety in air commerce. This regulation is within the scope of that authority because it addresses an unsafe condition that is likely to exist or develop on products identified in this rulemaking action.

Regulatory Findings

We determined that this AD will not have federalism implications under Executive Order 13132. This AD will not have a substantial direct effect on the States, on the relationship between the national Government and the States, or on the distribution of power and responsibilities among the various levels of government.

For the reasons discussed, I certify that this AD:

1. Is not a ''significant regulatory action'' under Executive Order 12866;

2. Is not a ''significant rule'' under DOT Regulatory Policies and Procedures (44 FR 11034, February 26, 1979);

3. Will not affect intrastate aviation in Alaska to the extent that it justifies making a regulatory distinction; and

4. Will not have a significant economic impact, positive or negative, on a substantial number of small entities under the criteria of the Regulatory Flexibility Act.

We prepared an economic evaluation of the estimated costs to comply with this AD and placed it in the AD docket.

List of Subjects in 14 CFR Part 39

Air transportation, Aircraft, Aviation safety, Incorporation by reference, Safety.

Adoption of the Amendment

Accordingly, under the authority delegated to me by the Administrator, the FAA amends 14 CFR part 39 as follows:

PART 39—AIRWORTHINESS DIRECTIVES

■ 1. The authority citation for part 39 continues to read as follows:

Authority: 49 U.S.C. 106(g), 40113, 44701.

§ 39.13 [Amended]

■ 2. The FAA amends § 39.13 by adding the following new airworthiness directive (AD):

2012–21–52 Agusta S.P.A. Helicopters (Type Certificate Currently Held By AgustaWestland S.P.A.) (Agusta): Amendment 39–17281; Docket No. FAA–2012–1135; Directorate Identifier 2012–SW–097–AD.

(a) Applicability

This AD applies to Agusta Model AW139 helicopters, serial numbers (S/N) 41201 through 41310, except S/N 41290, 41291, 41292, 41302, 41304, 41305, 41306, and 41309, certificated in any category.

(b) Unsafe Condition

This AD defines the unsafe condition as an incorrectly installed cyclic and collective control stick, detachment of the cyclic or collective control stick, and subsequent loss of control of the helicopter.

(c) Effective Date

This AD becomes effective December 26, 2012 to all persons except those persons to whom it was made immediately effective by Emergency AD 2012–21–52, issued on October 23, 2012, which contained the requirements of this AD.

(d) Compliance

You are responsible for performing each action required by this AD within the specified compliance time unless it has already been accomplished prior to that time.

(e) Required Actions

Within 5 hours time-in-service (TIS):

(1) Inspect the pilot collective stick installation to determine whether the self-locking nuts, part-number (P/N) MS17825–4, are secured with cotter pins, P/N MS24665–136, as depicted in Figure 1 to paragraph (e) of this AD. If the self-locking nuts are not secured with cotter pins, before further flight, reinstall the pilot collective stick.

BILLING CODE 4910–13–P

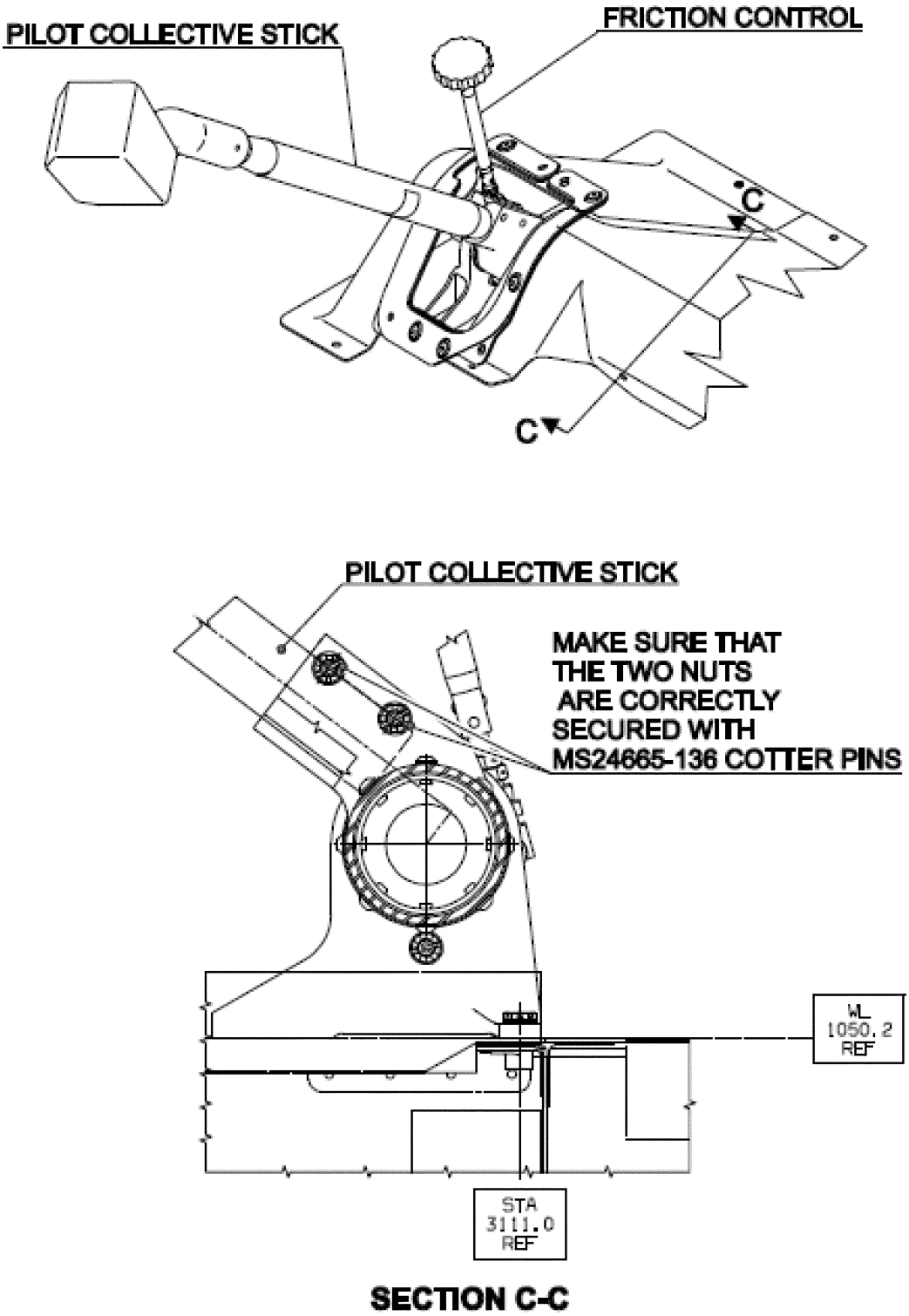

Figure 1 to paragraph (e)

(2) Inspect the co-pilot collective stick installation to determine whether the ring nut (item 2) is loose and the quick-release pin (item 3) is installed as depicted in Figure 2 to paragraph (e) of this AD. If the ring nut is loose or the quick-release pin is not installed, before further flight, reinstall the co-pilot collective stick.

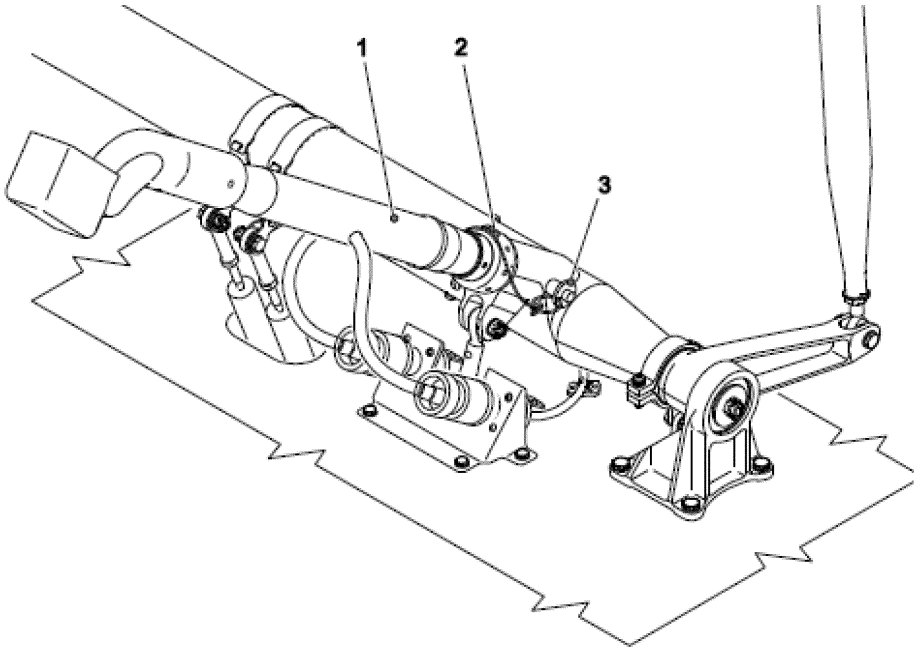

Figure 2 to paragraph (e)

(3) Inspect the pilot cyclic stick installation for proper installation of the bolt (item 3), washer (item 4), self-locking nut (item 7), washer (item 6), and the cotter pin (item 8), as depicted in Figure 3 to paragraph (e) of this AD. If the pilot cyclic stick is not installed as depicted, before further flight, reinstall the pilot cyclic stick.

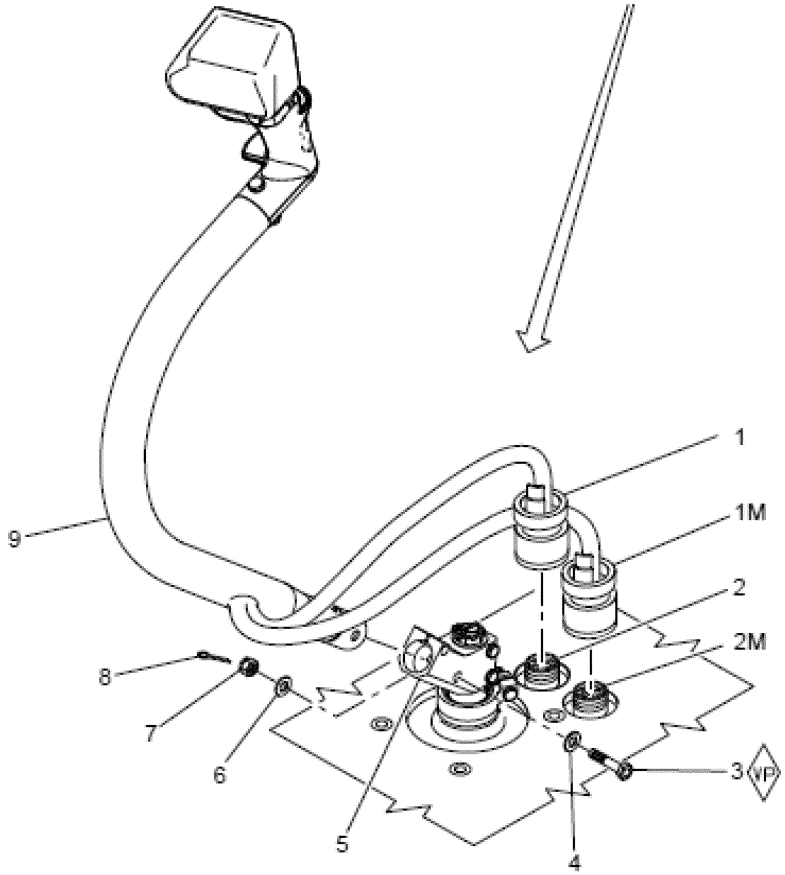

Figure 3 to paragraph (e)

(4) Inspect the co-pilot cyclic stick installation to determine whether the ring nut (item 1) is loose and the quick-release pin (item 5) is installed as depicted in Figure 4 to paragraph (e) of this AD. If the ring nut is loose or the quick-release pin is not installed as depicted, before further flight, reinstall the co-pilot cyclic stick.

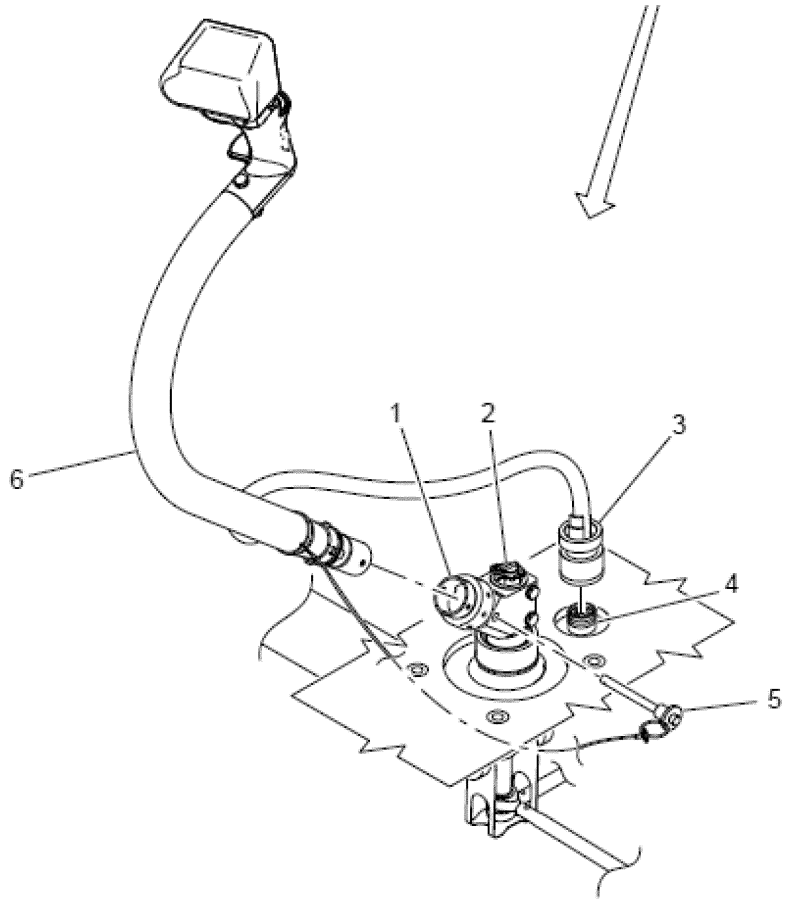

Figure 4 to paragraph (e)

(f) Special Flight Permits

Special flight permits will not be issued.

(g) Alternative Methods of Compliance (AMOCs)

(1) The Manager, Safety Management Group, FAA, may approve AMOCs for this AD. Send your proposal to: Robert Grant, Aviation Safety Engineer, Safety Management Group, FAA, 2601 Meacham Blvd., Fort Worth, Texas 76137; telephone 817–222–5328; email *robert.grant@faa.gov.*

(2) For operations conducted under a 14 CFR part 119 operating certificate or under 14 CFR part 91, subpart K, we suggest that you notify your principal inspector, or lacking a principal inspector, the manager of the local flight standards district office or certificate holding district office, before operating any aircraft complying with this AD through an AMOC.

(h) Additional Information

(1) Agusta Bollettino Tecnico No. 139–308, dated October 16, 2012, which is not incorporated by reference, contains additional information about the subject of this AD. For a copy of the service information referenced in this AD, contact: AgustaWestland, Customer Support & Services, Via Per Tornavento 15, 21019 Somma Lombardo (VA) Italy, ATTN: Giovanni Cecchelli; telephone 39–0331–711133; fax 39 0331 711180; or at *http://www.agustawestland.com/technical-bulletins.* You may review a copy of the service information at the FAA, Office of the Regional Counsel, Southwest Region, 2601 Meacham Blvd., Room 663, Fort Worth, Texas 76137.

(2) The subject of this AD is discussed in European Aviation Safety Agency AD No. 2012–0213–E, dated October 16, 2012.

(i) Subject

Joint Aircraft Service Component (JASC) Code: 2700: Flight Controls.

Issued in Fort Worth, Texas, on December 3, 2012.

Kim Smith,

Directorate Manager, Rotorcraft Directorate, Aircraft Certification Service.

[FR Doc. 2012–29716 Filed 12–7–12; 8:45 am]

BILLING CODE 4910–13–C

DEPARTMENT OF TRANSPORTATION

Federal Aviation Administration

14 CFR Part 39

[Docket No. FAA–2012–0672; Directorate Identifier 2011–NM–261–AD; Amendment 39–17276; AD 2012–24–06]

RIN 2120–AA64

Airworthiness Directives; Saab AB, Saab Aerosystems Airplanes

AGENCY: Federal Aviation Administration (FAA), Department of Transportation (DOT).

ACTION: Final rule.

SUMMARY: We are adopting a new airworthiness directive (AD) for certain Saab AB, Saab Aerosystems Model 340A (SAAB/SF340A) and SAAB 340B airplanes. This AD was prompted by reports of stall events during icing conditions where the natural stall warning (buffet) was not identified. This AD requires replacing the stall warning computer (SWC) with a new SWC, which provides an artificial stall

warning in icing conditions, and modifying the airplane for the replacement of the SWC. We are issuing this AD to prevent natural stall events when operating in icing conditions, which, if not corrected, could result in loss of control of the airplane.

DATES: This AD becomes effective January 14, 2013.

The Director of the Federal Register approved the incorporation by reference of certain publications listed in this AD as of January 14, 2013.

ADDRESSES: You may examine the AD docket on the Internet at *http://www.regulations.gov* or in person at the U.S. Department of Transportation, Docket Operations, M–30, West Building Ground Floor, Room W12–140, 1200 New Jersey Avenue SE., Washington, DC.

FOR FURTHER INFORMATION CONTACT: Shahram Daneshmandi, Aerospace Engineer, International Branch, ANM–116, Transport Airplane Directorate, FAA, 1601 Lind Avenue SW., Renton, Washington 98057–3356; telephone (425) 227–1112; fax (425) 227–1149.

SUPPLEMENTARY INFORMATION:

Discussion

We issued a notice of proposed rulemaking (NPRM) to amend 14 CFR part 39 to include an AD that would apply to the specified products. That NPRM was published in the **Federal Register** on June 27, 2012 (77 FR 38224). That NPRM proposed to correct an unsafe condition for the specified products. The Mandatory Continuing Airworthiness Information (MCAI) states:

A few natural stall events, specifically when operating in icing conditions, have been experienced on SAAB 340 series aeroplanes, without receiving a prior stall warning. This condition, if not corrected, could result in loss of control of the aeroplane.

To address this potential unsafe condition, a modified stall warning system, incorporating improved stall warning logic, has been developed.

SAAB have issued Service Bulletin (SB) 340–27–098 and SB 340–27–099, which include instructions to replace the present Stall Warning Computer (SWC) with a new SWC, and instructions to activate the new SWC. The new system includes stall warning curves optimized for operation in icing conditions, which are activated by selection of Engine Anti-Ice.

For the reasons described above, this [European Aviation Safety Agency (EASA)] AD requires the replacement of the SWC, by installing new SWC Part Number (P/N) 0020AK6 on aeroplanes with basic wing tip, and installing a new SWC P/N 0020AK7 on aeroplanes with extended wing tip, as applicable to aeroplane configuration.

You may obtain further information by examining the MCAI in the AD docket.

Comments

We gave the public the opportunity to participate in developing this AD. We considered the comments received. The National Transportation Safety Board stated that it supports the NPRM (77 FR 38224, June 27, 2012).

Request To Revise Company Name and Email Address

Saab AB (the commenter) requested that we revise the NPRM (77 FR 38224, June 27, 2012) throughout to change the name of the Saab company referenced in the NPRM from ''Saab AB, Saab Aerosystems'' to the new company name, ''Saab AB, Aeronautics.'' The commenter also requested to change the company email address referenced in the NPRM from ''*saab2000tech support@saabgroup.com*'' to ''*saab340 techsupport@saabgroup.com*.''

We agree with the intent of the commenter's request. The FAA is in the process of changing the type certificate data sheet (TCDS) to reflect the name change. We will use the name identified in the current TCDS so as not to delay issuance of the final rule. Once the TCDS has been changed, we will use the new name in subsequent ADs. We changed the email address appropriately in paragraph (m) of this AD.

Request To Revise Text in Summary Section and Paragraph (e) of the NPRM (77 FR 38224, June 27, 2012)

Saab AB requested that we revise the second and third sentences in the Summary section and a related sentence in paragraph (e) of the NPRM (77 FR 38224, June 27, 2012). In the Summary section, the commenter requested that we revise the following text to clarify that the airplane had been certified with natural buffet—as the stall warning—in icing conditions, and explained that replacement of the SWC would increase the safety level by introducing an artificial stall warning for icing conditions.

This proposed AD was prompted by reports of stall events during icing conditions which were not accompanied with a prior stall warning. This proposed AD would require replacing the stall warning computer (SWC) with a new SWC, and modifying the airplane for the replacement of the SWC.

The commenter suggested the following text.

This proposed AD was prompted by reports of stall events during icing conditions where the natural stall warning (buffet) was not identified. This proposed AD would require replacing the stall warning computer (SWC) with a new SWC, which provides an artificial stall warning in icing conditions, and modifying the airplane for the replacement of the SWC.

The commenter also requested that the first sentence in paragraph (e) of the NPRM (77 FR 38224, June 27, 2012) be changed to match the new wording.

We agree with the request for the reasons provided by the commenter. Therefore, we changed the wording in the Summary section and paragraph (e) of this AD as proposed by the commenter.

Request To Revise Text in Paragraph (i) of the NPRM (77 FR 38224, June 27, 2012)

Saab AB requested that we revise paragraph (i) of the NPRM (77 FR 38224, June 27, 2012), which reads ''As of effective date of this AD, do not install any SWC having P/N 0020AK, 0020AK1, 0020AK2, 0020AK4, or 0020AK3 MOD 1 on any airplane,'' to ''After modification of an airplane as required by paragraph (g) and (h) of this AD, do not install any SWC having P/N 0020AK, 0020AK1, 0020AK2, 0020AK4, or 0020AK3 MOD 1 on any airplane.'' The commenter stated that this change would allow an operator, during the compliance time, to install an SWC having the same part number of the failed SWC.

We agree because there is a potential problem with availability of the new part. Therefore, we have changed the wording in paragraph (i) of this AD to match the intent of the commenter's request.

Conclusion

We reviewed the available data, including the comments received, and determined that air safety and the public interest require adopting the AD with the changes described previously—except for minor editorial changes. We have determined that these changes:

- Are consistent with the intent that was proposed in the NPRM (77 FR 38224, June 27, 2012) for correcting the unsafe condition; and
- Do not add any additional burden upon the public than was already proposed in the NPRM (77 FR 38224, June 27, 2012).

Costs of Compliance

We estimate that this AD will affect 162 products of U.S. registry. We also estimate that it will take about 78 work-hours per product to comply with the basic requirements of this AD. The average labor rate is $85 per work-hour. Required parts will cost about $33,000 per product. Where the service information lists required parts costs that are covered under warranty, we

have assumed that there will be no charge for these parts. As we do not control warranty coverage for affected parties, some parties may incur costs higher than estimated here. Based on these figures, we estimate the cost of this AD to the U.S. operators to be $6,420,060, or $39,630 per product.

Authority for This Rulemaking

Title 49 of the United States Code specifies the FAA's authority to issue rules on aviation safety. Subtitle I, section 106, describes the authority of the FAA Administrator. ''Subtitle VII: Aviation Programs,'' describes in more detail the scope of the Agency's authority.

We are issuing this rulemaking under the authority described in ''Subtitle VII, Part A, Subpart III, Section 44701: General requirements.'' Under that section, Congress charges the FAA with promoting safe flight of civil aircraft in air commerce by prescribing regulations for practices, methods, and procedures the Administrator finds necessary for safety in air commerce. This regulation is within the scope of that authority because it addresses an unsafe condition that is likely to exist or develop on products identified in this rulemaking action.

Regulatory Findings

We determined that this AD will not have federalism implications under Executive Order 13132. This AD will not have a substantial direct effect on the States, on the relationship between the national government and the States, or on the distribution of power and responsibilities among the various levels of government.

For the reasons discussed above, I certify that this AD:

1. Is not a ''significant regulatory action'' under Executive Order 12866;
2. Is not a ''significant rule'' under the DOT Regulatory Policies and Procedures (44 FR 11034, February 26, 1979);
3. Will not affect intrastate aviation in Alaska; and
4. Will not have a significant economic impact, positive or negative, on a substantial number of small entities under the criteria of the Regulatory Flexibility Act.

We prepared a regulatory evaluation of the estimated costs to comply with this AD and placed it in the AD docket.

Examining the AD Docket

You may examine the AD docket on the Internet at *http://www.regulations.gov;* or in person at the Docket Operations office between 9 a.m. and 5 p.m., Monday through Friday, except Federal holidays. The AD docket contains the NPRM (77 FR 38224, June 27, 2012), the regulatory evaluation, any comments received, and other information. The street address for the Docket Operations office (telephone (800) 647–5527) is in the **ADDRESSES** section. Comments will be available in the AD docket shortly after receipt.

List of Subjects in 14 CFR Part 39

Air transportation, Aircraft, Aviation safety, Incorporation by reference, Safety.

Adoption of the Amendment

Accordingly, under the authority delegated to me by the Administrator, the FAA amends 14 CFR part 39 as follows:

PART 39—AIRWORTHINESS DIRECTIVES

■ 1. The authority citation for part 39 continues to read as follows:

Authority: 49 U.S.C. 106(g), 40113, 44701.

§ 39.13 [Amended]

■ 2. The FAA amends § 39.13 by adding the following new AD:

2012–24–06 Saab AB, Saab Aerosystems: Amendment 39–17276. Docket No. FAA–2012–0672; Directorate Identifier 2011–NM–261–AD.

(a) Effective Date

This airworthiness directive (AD) becomes effective January 14, 2013.

(b) Affected ADs

None.

(c) Applicability

This AD applies to Saab AB, Saab Aerosystems Model 340A (SAAB/SF340A) and SAAB 340B airplanes, certificated in any category, as identified in paragraphs (c)(1) and (c)(2) of this AD, except airplanes that have SAAB Modification 2650 and/or 2859 installed. This AD does not apply to airplanes with serial numbers 170, 342, 362, 363, 367, 372, 379, 385, 395, 405, 409, 431, and 455.

(1) Model 340A (SAAB/SF340A) airplanes, serial numbers 004 through 159 inclusive.

(2) Model SAAB 340B airplanes, serial numbers 160 through 459 inclusive.

(d) Subject

Air Transport Association (ATA) of America Code 27: Flight Controls.

(e) Reason

This AD was prompted by reports of stall events during icing conditions where the natural stall warning (buffet) was not identified. We are issuing this AD to prevent natural stall events when operating in icing conditions, which, if not corrected, could result in loss of control of the airplane.

(f) Compliance

You are responsible for having the actions required by this AD performed within the compliance times specified, unless the actions have already been done.

(g) Replacement

(1) For airplanes with basic wing tips: Within 24 months after the effective date of this AD, replace all stall warning computers (SWCs) having part number (P/N) 0020AK, 0020AK1, 0020AK2, or 0020AK4, with a new SWC P/N 0020AK6, in accordance with the Accomplishment Instructions of Saab Service Bulletin 340–27–098, Revision 01, dated April 13, 2012.

(2) For airplanes with extended wing tips: Within 24 months after the effective date of this AD, replace the SWC P/N 0020AK3 MOD 1 with a new SWC P/N 0020AK7, in accordance with the Accomplishment Instructions of Saab Service Bulletin 340–27–099, Revision 01, dated April 13, 2012.

(h) Concurrent Modification

Before or concurrently with the accomplishment of the requirements of paragraph (g) of this AD: Modify the airplane in accordance with the Accomplishment Instructions of Saab Service Bulletin 340–27–097, Revision 03, dated April 19, 2012.

(i) Parts Installation Prohibition

After accomplishing the replacement required by paragraph (g) of this AD and the modification required by paragraph (h) of this AD, do not install any SWC having P/N 0020AK, 0020AK1, 0020AK2, 0020AK4, or 0020AK3 MOD 1 on any airplane.

(j) Credit for Previous Actions

This paragraph provides credit for actions required by paragraph (h) of this AD, if those actions were performed before the effective date of this AD using the service bulletin specified in paragraph (j)(1), (j)(2), or (j)(3) of this AD, which are not incorporated by reference in this AD.

(1) Saab Service Bulletin 340–27–097, dated September 1, 2011.

(2) Saab Service Bulletin 340–27–097, Revision 01, dated September 26, 2011.

(3) Saab Service Bulletin 340–27–097, Revision 02, dated October 7, 2011.

(k) Other FAA AD Provisions

The following provisions also apply to this AD:

(1) *Alternative Methods of Compliance (AMOCs):* The Manager, ANM–116, International Branch, Transport Airplane Directorate, FAA, has the authority to approve AMOCs for this AD, if requested using the procedures found in 14 CFR 39.19. In accordance with 14 CFR 39.19, send your request to your principal inspector or local Flight Standards District Office, as appropriate. If sending information directly to the International Branch, send it to ATTN: Shahram Daneshmandi, Aerospace Engineer, International Branch, ANM–116, Transport Airplane Directorate, FAA, 1601 Lind Avenue SW., Renton, Washington 98057–3356; telephone (425) 227–1112; fax (425) 227–1149. Information may be emailed to: *9-ANM-116-AMOC-REQUESTS@faa.gov*. Before using any approved AMOC, notify your appropriate principal inspector, or lacking a principal inspector, the manager of the local flight standards district office/

certificate holding district office. The AMOC approval letter must specifically reference this AD.

(2) *Airworthy Product:* For any requirement in this AD to obtain corrective actions from a manufacturer or other source, use these actions if they are FAA-approved. Corrective actions are considered FAA-approved if they are approved by the State of Design Authority (or their delegated agent). You are required to assure the product is airworthy before it is returned to service.

(l) Related Information

Refer to MCAI European Aviation Safety Agency Airworthiness Directive 2011–0219, dated November 11, 2011, and the service information specified in paragraphs (l)(1) through (l)(3) of this AD, for related information.

(1) Saab Service Bulletin 340–27–097, Revision 03, dated April 19, 2012.

(2) Saab Service Bulletin 340–27–098, Revision 01, dated April 13, 2012.

(3) Saab Service Bulletin 340–27–099, Revision 01, dated April 13, 2012.

(m) Material Incorporated by Reference

(1) The Director of the Federal Register approved the incorporation by reference (IBR) of the service information listed in this paragraph under 5 U.S.C. 552(a) and 1 CFR part 51.

(2) You must use this service information as applicable to do the actions required by this AD, unless the AD specifies otherwise.

(i) Saab Service Bulletin 340–27–097, Revision 03, dated April 19, 2012.

(ii) Saab Service Bulletin 340–27–098, Revision 01, dated April 13, 2012.

(iii) Saab Service Bulletin 340–27–099, Revision 01, dated April 13, 2012.

(3) For service information identified in this AD, contact Saab AB, Saab Aeronautics, SE–581 88, Linköping, Sweden; telephone +46 13 18 5591; fax +46 13 18 4874; email *saab340techsupport@saabgroup.com;* Internet *http://www.saabgroup.com.*

(4) You may review copies of the service information at the FAA, Transport Airplane Directorate, 1601 Lind Avenue SW., Renton, WA. For information on the availability of this material at the FAA, call 425–227–1221.

(5) You may view this service information that is incorporated by reference at the National Archives and Records Administration (NARA). For information on the availability of this material at NARA, call 202–741–6030, or go to: *http://www.archives.gov/federal-register/cfr/ibr-locations.html.*

Issued in Renton, Washington, on November 21, 2012.

Ali Bahrami,

Manager, Transport Airplane Directorate, Aircraft Certification Service.

[FR Doc. 2012–29169 Filed 12–7–12; 8:45 am]

BILLING CODE 4910–13–P

DEPARTMENT OF TRANSPORTATION

Federal Aviation Administration

14 CFR Part 39

[Docket No. FAA–2012–0186; Directorate Identifier 2011–NM–268–AD; Amendment 39–17278; AD 2012–24–08]

RIN 2120–AA64

Airworthiness Directives; The Boeing Company Airplanes

AGENCY: Federal Aviation Administration (FAA), DOT.

ACTION: Final rule.

SUMMARY: We are adopting a new airworthiness directive (AD) for certain The Boeing Company Model 737–600, –700, –700C, –800, –900, and –900ER series airplanes. This AD was prompted by reports of flight crew failure to activate air data probe heat. This AD requires modifying the anti-icing system for the angle of attack sensor, the total air temperature, and the pitot probes. We are issuing this AD to prevent ice from forming on air data system sensors and consequent loss of or misleading airspeed indication on all airspeed indicating systems, which could lead to loss of control of the airplane.

DATES: This AD is effective January 14, 2013.

The Director of the Federal Register approved the incorporation by reference of a certain publication listed in the AD as of January 14, 2013.

ADDRESSES: For service information identified in this AD, contact Boeing Commercial Airplanes, Attention: Data & Services Management, P.O. Box 3707, MC 2H–65, Seattle, WA 98124–2207; telephone 206–544–5000, extension 1; fax 206–766–5680; Internet *https://www.myboeingfleet.com.* You may review copies of the referenced service information at the FAA, Transport Airplane Directorate, 1601 Lind Avenue SW., Renton, WA. For information on the availability of this material at the FAA, call 425–227–1221.

Examining the AD Docket

You may examine the AD docket on the Internet at *http://www.regulations.gov;* or in person at the Docket Management Facility between 9 a.m. and 5 p.m., Monday through Friday, except Federal holidays. The AD docket contains this AD, the regulatory evaluation, any comments received, and other information. The address for the Docket Office (phone: 800–647–5527) is Document Management Facility, U.S. Department of Transportation, Docket Operations, M–30, West Building Ground Floor, Room W12–140, 1200 New Jersey Avenue SE., Washington, DC 20590.

FOR FURTHER INFORMATION CONTACT: Frank Carreras, Aerospace Engineer, Systems and Equipment Branch, ANM–130S, FAA, Seattle Aircraft Certification Office (ACO), 1601 Lind Avenue SW., Renton, WA 98057–3356; phone: 425–917–6442; fax: 425–917–6590; email: *frank.carreras@faa.gov.*

SUPPLEMENTARY INFORMATION:

Discussion

We issued a notice of proposed rulemaking (NPRM) to amend 14 CFR part 39 to include an AD that would apply to the specified products. That NPRM published in the **Federal Register** on February 28, 2012 (77 FR 11789). That NPRM proposed to require modifying the anti-icing system for the angle of attack sensor, the total air temperature, and the pitot probes.

Actions Since Issuance of NPRM (77 FR 11789, February 28, 2012)

Since we issued the NPRM (77 FR 11789, February 28, 2012), we reviewed Boeing Alert Service Bulletin 737–30A1063, Revision 1, dated July 10, 2012. (The NPRM referred to Boeing Alert Service Bulletin 737–30A1063, dated November 16, 2011.) Among other things, Boeing Alert Service Bulletin 737–30A1063, Revision 1, dated July 10, 2012, updates certain information, including part numbers, various accomplishment steps, certain modules, maintenance manuals, and kit information.

Comments

We gave the public the opportunity to participate in developing this AD. The following presents the comments received on the proposal (77 FR 11789, February 28, 2012) and the FAA's response to each comment. Aviation Partners Boeing stated that installation of winglets per STC ST00830SE does not affect the NPRM and stated it would provide supporting data to the FAA upon request.

Request To Revise Compliance Time

Seven commenters requested that we revise the 24-month compliance time, as proposed in the NPRM (77 FR 11789, February 28, 2012).

Korean Air Lines (KAL), Air Pacific Limited (APC), Delta Air Lines, Inc. (DAL), American Airlines (AAL), United Airlines (UAL), and Southwest Airlines (SWA) requested we extend the compliance time. UAL and AAL requested we take into account the time needed to obtain modification kits and

to modify the panels. SWA and AAL stated that the compliance time will result in unscheduled maintenance outside of a heavy maintenance cycle. SWA stated unscheduled maintenance visits could last up to four days outside of a heavy maintenance cycle. APC noted it would not be able to accomplish the actions during this year's C-checks, which are at 2-year intervals.

Turkish Airlines (THY) stated that the proposed 24-month compliance time may not be enough for fleet-wide retrofit since the P5–9 panel modification restricts the rate of aircraft modification. KAL requested that the compliance time be extend to 30 or more months. DAL requested that the compliance time be extended to 36 months due to several factors. DAL cited the rate at which operators can complete the modification, expected late kit release based on revisions in service information linked to the service bulletin validation process, and ''flawed'' service information. DAL also compared the modification specified in this NPRM (77 FR 11789, February 28, 2012) with a similar modification that installs warning lights to the P1–3 and P3–1 panels, and stated that this similar modification has a 36-month compliance time.

We disagree with these requests to extend the compliance time. In developing an appropriate compliance time for these actions, we considered the urgency associated with the subject unsafe condition, the practical aspect of accomplishing the required modification and the normal scheduled maintenance times for most affected operators. In consideration of these items, as well as parts availability, we have determined that the 24-month compliance time for the modification is the longest duration allowable that will ensure an acceptable level of safety. According to the provisions of paragraph (i) of this AD, however, we may approve requests to adjust the compliance time if the requests include data substantiating that the new compliance time would provide an acceptable level of safety. We have not changed the final rule regarding this issue.

Request To Include an Alerting System

Air Line Pilots Association International (ALPA) requested that we revise the NPRM (77 FR 11789, February 28, 2012) by including an alerting system as part of the proposed requirements. ALPA stated that any automatic system design must include a crew alerting system to provide the flight crew with an aural and visual indication if the heating system does not automatically activate or is not functioning properly. ALPA further states that human factors principles should be integrated into a warning system design to ensure that factors such as pilot field of view and nuisance warnings due to normal ground operations (e.g., single engine taxi) are fully evaluated. ALPA stated that Boeing Model 747–400 airplanes have an automatic system and this system provides crews with an engine indicating and crew alerting system (EICAS) message if any item in the air data probe suite is not being heated, either due to heating element failure or if the system fails to activate upon engine start. ALPA reasoned that a similar alerting system should be included in the proposed system for Model 737 airplanes.

We agree that if the heating system does not automatically activate or is not functioning properly, the flight crew should receive an alert. We also agree that human factors principles should be considered in an alert system design. These principles are consistent with FAA regulations, policy, and guidance.

However, we disagree with revising this AD to include changes to the flight crew alerting for pitot heat malfunctions on Model 737 airplanes because that model incorporates ''CAPT PITOT'' and ''F/O PITOT'' caution lights on the P5–9 overhead panel for the captain's and first officer's probe heat. Both caution lights are tied to a Master Caution light in each pilot's primary field of view and an ''Anti-ice'' caution light that alerts the pilots to check the overhead panel for the specific condition causing the Master Caution and ''Anti-ice'' lights to illuminate. The captain's and/or first officer's PITOT light will illuminate whenever a loss of electrical current flow is sensed through the respective pitot probe heater. The practical effect of the change to automatic probe heat activation is that when the probe heat switch is in AUTO, the respective PITOT light should be out when either engine is running. Therefore, if the switch is in AUTO and the corresponding PITOT light remains on with either engine running, a malfunction of the automatic activation system is indicated.

Flight crew procedures for both normal and non-normal operation of the pitot heat system are unaffected by this change. We have determined that the existing flight crew alerting for pitot heat malfunctions provides adequate flight crew alerting for pitot heat malfunctions on Model 737 airplanes, whether the system is manually or automatically activated. Furthermore, since probe heat is activated with the probe heat switch in AUTO when either engine is running, single engine taxi should not generate nuisance warnings; a PITOT light during single engine taxi would indicate a malfunction of the automatic activation system. No change to the final rule is necessary in this regard.

Request To Revise Precipitating Event Language

Boeing requested we revise the sentence in the Summary section of the NPRM (77 FR 11789, February 28, 2012) that describes the precipitating event, i.e., ''reports of flight crew failure to activate air data probe heat.'' Boeing suggested that the phrase ''as required by the FAA approved operating procedures'' be added to the end of the sentence in question. Boeing reasoned that the suggested text would make it clear that existing Boeing Model 737NG operating procedures are FAA-approved and that the flight crew failed to perform a required action.

We disagree with the commenter's request to revise the language that describes the precipitating event. Regardless of whether the flight crew adhered to prescribed operating procedures, we consider that failure to activate the air data probe heat on the part of the flight crew represents an unacceptable risk to the affected airplanes, as evidenced by the current lack of an automatic probe heat activation system in combination with the demonstrated accident and incident history on the type associated with failure to activate probe heat. In addition, the purpose of this AD is to identify and correct an unsafe condition in the type design of the affected airplanes. We find that the precipitating event statement is accurate as originally worded in the NPRM (77 FR 11789, February 28, 2012). We have not made any change to the final rule in this regard.

Request To Revise Unsafe Condition Statement

Boeing requested we revise the unsafe condition statement in the Summary section, Discussion section, and paragraph (e) of the NPRM (77 FR 11789, February 28, 2012). Boeing stated that the text ''* * * which could lead to loss of control of the airplane'' should read, ''* * * which would not provide the necessary air data instrumentation to safely fly the airplane.'' Boeing stated that loss of, or erroneous, airspeed indications do not necessarily lead to loss of control because other indications can be used to safely fly the airplane. Boeing noted that multiple in-service

events have occurred without loss of control when the flight crew followed the procedures that mitigate loss of air data.

We disagree with the commenter's request to revise the unsafe condition statement. Although some in-service events might have occurred without loss of control, loss of, or misleading airspeed indication on all airspeed indicating systems can, in fact, lead to an unsafe condition of loss of airplane control. FAA Advisory Circular (AC) 25–11A, ''Electronic Flight Deck Displays,'' dated June 21, 2007 (*http://rgl.faa.gov/Regulatory_and_Guidance_Library/rgAdvisoryCircular.nsf/0/7d6139991c94e7d9862573080063f84d/$FILE/AC%2025-11A.pdf*), typically classifies loss of all airspeed displays (including the standby display) as a ''catastrophic'' failure condition. ''Catastrophic'' is defined in FAA AC 25.1309–1A, ''System Design and Analysis,'' dated June 21, 1988 (*http://rgl.faa.gov/Regulatory_and_Guidance_Library/rgAdvisoryCircular.nsf/0/50bfe03b65af9ea3862569d100733174/$FILE/AC25.1309-1A.pdf*) as a failure condition which would prevent continued safe flight and landing. FAA AC 25–11A also classifies display of misleading airspeed information on one primary display combined with a standby failure (i.e., loss of airspeed or incorrect airspeed) as a ''catastrophic'' failure condition. As specified in National Transportation Safety Board (NTSB) Safety Recommendation A–07–56, dated September 13, 2007 (*http://www.ntsb.gov/doclib/recletters/2007/a07_55_56.pdf*), in at least one in-service event on a Boeing Model 737 airplane, it was determined that this condition ultimately resulted in a loss of airplane control with fatal injuries.

In addition, we agree with Boeing's identification of the effects of unreliable air data, as given in the Background section of Boeing Alert Service Bulletin 737–30A1063, dated November 16, 2011; and Revision 1, dated July 10, 2012. For these reasons, we find that the unsafe condition statement is accurate as originally worded in the NPRM (77 FR 11789, February 28, 2012). We have not made any change to the final rule in this regard.

Request To Revise Discussion Section of the NPRM (77 FR 11789, February 28, 2012)

Boeing requested we revise certain text in the Discussion section of the NPRM (77 FR 11789, February 28, 2012):

- To indicate existing compliance of pitot heat alerting with section 25.1326 of the Federal Aviation Regulations (14 CFR 25.1326);
- To indicate failure of the flight crew to respond properly to the amber caution-level indication of a lack of probe heat; and
- To state that the indication is in clear view of a flight crew member.

Boeing stated the changes are needed for the following reasons:

- To correctly state that the system provides indication of a lack of probe heat activation, as required by section 25.1326 of the Federal Aviation Regulations (14 CFR 25.1326), rather than a positive indication of heat activation, as stated by the FAA (and which would not be compliant);
- To make it clear that the existing indication is compliant;
- To correct the ''blameless'' tone of the passive voice used in the first sentence of the Discussion section by making it clear that it is only the flight crew that can fail to activate the probe heat, which is one of the advantages of a manual system; and
- To make it explicit that the unsafe condition is not only a result of flight crew failure to activate the probe heat, but also a result of the flight crew ignoring the caution-level indication that is in plain view.

Since the Discussion section of the NPRM (77 FR 11789, February 28, 2012) is not restated in the final rule, we cannot change that section. However, we find that clarification is necessary.

According to section 39.5 of the Federal Aviation Regulations (14 CFR 39.5), we issue ADs when we find that an unsafe condition exists in the product, and that the unsafe condition is likely to exist or develop in other products of the same type design. We made such a finding with respect to the pitot heat system of the affected airplanes in this AD action. Therefore, it is our responsibility to correct the unsafe condition independent of whether the design was considered compliant to applicable airworthiness standards; an AD is the appropriate vehicle for doing so.

Additionally, we do not make findings for the incidents identified in safety recommendations issued by the National Transportation Safety Board (NTSB). We do not have any information that supports the argument that the flight crews involved in the incidents identified in the NTSB safety recommendation deliberately disregarded a properly functioning pitot heat alert that they had observed. Many possible scenarios associated with pitot heat alerting could contribute to the failure of the flight crew to activate the probe heat; including a malfunction of probe heat alerting resulting in failure to provide an indication of lack of activation, the flight crew not observing or properly identifying the alert due to various factors (even though certain elements of the alerting system are within the pilots' primary field of view), or the flight crew not understanding the meaning of the alert or the proper procedures for responding to it.

We have not made any changes to the final rule in this regard.

Request To Revise Cost Estimate

AAL, DAL, and SWA requested that we revise the cost estimate of the NPRM (77 FR 11789, February 28, 2012). AAL stated the NPRM and service information underestimate the labor cost by greater than 50 percent. AAL stated that additional out-of-service days and lost opportunity cost should be included in the Cost of Compliance section of the NPRM. DAL stated there is a significant investment in excess of $250,000 in ''seed'' modules that are necessary to minimize the risk of not accomplishing the proposed changes. DAL concluded that this cost is not represented in the Costs of Compliance of the NPRM. SWA stated the expected labor cost is underestimated by 32 work-hours due to removal and reinstallation of lavatory A and galley #1.

We partially agree with the commenters' request to revise the cost estimate. We do not agree to change the AD to accommodate the investment in ''seed'' modules, since this appears to be an operator-specific cost associated with individual maintenance scheduling. Also, we disagree that the cost estimate is underestimated by greater than 50 percent. However, we revised the Costs of Compliance section of this AD as follows. We revised the parts cost to match the information presented in Boeing Alert Service Bulletin 737–30A1063, Revision 1, dated July 10, 2012. In addition, we included 30 additional work-hours for removing and reinstalling lavatory and galley monuments that might be necessary to do the modification. This information was coordinated with Boeing.

Request To Reference Revised Service Information

Several commenters noted that Boeing Alert Service Bulletin 737–30A1063, dated November 16, 2011, is inadequate. That service information is cited in the NPRM (77 FR 11789, February 28, 2012) as the appropriate source of service information for accomplishing the required actions. The commenters requested that the service information

be revised to incorporate certain clarifications. One airline, DAL, specifically requested that the final rule not be released until the service information has been validated.

We agree. As explained previously, Boeing Alert Service Bulletin 737–30A1063, Revision 1, dated July 10, 2012, has been issued. This service information has been validated by means of use of an aircraft in maintenance, and is referenced in this final rule as the appropriate source of service information. In addition, we added a new paragraph (h) to this AD (and re-designated subsequent paragraphs) to provide credit for certain actions performed before the effective date of this AD using Boeing Alert Service Bulletin 737–30A1063, dated November 16, 2011.

DAL also requested we specify ''revisions to BAE Systems Service Bulletin 233A3201–30–02'' as approved service information, and provide contact information for BAE. (The commenter did not specify a revision level or date for the BAE service information.) DAL stated that its review of the BAE Systems service information (which provides instructions on how to modify the P5–9 window/pitot heat module to the required ON and AUTO pitot heat switch configuration) identified discrepancies in the Accomplishment Instructions.

DAL provided examples of the identified discrepancies, including connector identifications and the number of printed wire assemblies on the P5–9 modules. DAL stated it has contacted Boeing and BAE Systems to seek resolution of these discrepancies.

DAL added that BAE concurred that its service information will require revision. DAL indicated that additional revision of the Boeing service information might be required in light of any BAE Systems service information revision. DAL noted that the service information, as currently published, would necessitate that operators request approval of alternative methods of compliance (AMOC) for resolutions to the identified discrepancies in order to comply with the final rule.

We find that clarification is necessary. The intent of this AD is to require installation of a P5–9 module with AUTO and ON pitot heat switch functionality that supports automatic pitot heat activation. As discussed previously, we reviewed Boeing Alert Service Bulletin 737–30A1063, dated November 16, 2011; and Boeing Alert Service Bulletin 737–30A1063, Revision 1, dated July 10, 2012; and determined that this service information provides sufficient instructions to adequately correct the unsafe condition. Operators may use either the original issue or Boeing Alert Service Bulletin 737–30A1063, Revision 1, dated July 10, 2012, to comply with the AD requirements. However, this AD does not require accomplishment of the BAE service information. No change to the final rule is necessary in this regard.

Conclusion

We reviewed the relevant data, considered the comments received, and determined that air safety and the public interest require adopting the AD with the changes described previously. We have determined that these minor changes:

- Are consistent with the intent that was proposed in the NPRM (77 FR 11789, February 28, 2012) for correcting the unsafe condition; and
- Do not add any additional burden upon the public than was already proposed in the NPRM (77 FR 11789, February 28, 2012).

We also determined that these changes will not increase the economic burden on any operator or increase the scope of the AD.

Costs of Compliance

We estimate that this AD affects 1,025 airplanes of U.S. registry.

We estimate the following costs to comply with this AD:

ESTIMATED COSTS

Action	Labor cost	Parts cost	Cost per product	Cost on U.S. operators
Modification, including removing and reinstalling galleys and lavatories.	90 to 109 work-hours × $85 per hour = $7,650 to $9,265.	$6,674 to $8,051	Up to $17,316	Up to $17,748,900.

Authority for This Rulemaking

Title 49 of the United States Code specifies the FAA's authority to issue rules on aviation safety. Subtitle I, section 106, describes the authority of the FAA Administrator. Subtitle VII: Aviation Programs, describes in more detail the scope of the Agency's authority.

We are issuing this rulemaking under the authority described in Subtitle VII, Part A, Subpart III, Section 44701: ''General requirements.'' Under that section, Congress charges the FAA with promoting safe flight of civil aircraft in air commerce by prescribing regulations for practices, methods, and procedures the Administrator finds necessary for safety in air commerce. This regulation is within the scope of that authority because it addresses an unsafe condition that is likely to exist or develop on products identified in this rulemaking action.

Regulatory Findings

This AD will not have federalism implications under Executive Order 13132. This AD will not have a substantial direct effect on the States, on the relationship between the national government and the States, or on the distribution of power and responsibilities among the various levels of government.

For the reasons discussed above, I certify that this AD:

(1) Is not a ''significant regulatory action'' under Executive Order 12866,

(2) Is not a ''significant rule'' under DOT Regulatory Policies and Procedures (44 FR 11034, February 26, 1979),

(3) Will not affect intrastate aviation in Alaska, and

(4) Will not have a significant economic impact, positive or negative, on a substantial number of small entities under the criteria of the Regulatory Flexibility Act.

List of Subjects in 14 CFR Part 39

Air transportation, Aircraft, Aviation safety, Incorporation by reference, Safety.

Adoption of the Amendment

Accordingly, under the authority delegated to me by the Administrator, the FAA amends 14 CFR part 39 as follows:

PART 39—AIRWORTHINESS DIRECTIVES

■ 1. The authority citation for part 39 continues to read as follows:

Authority: 49 U.S.C. 106(g), 40113, 44701.

§ 39.13 [Amended]

■ 2. The FAA amends § 39.13 by adding the following new airworthiness directive (AD):

2012–24–08 The Boeing Company: Amendment 39–17278; Docket No. FAA–2012–0186; Directorate Identifier 2011–NM–268–AD.

(a) Effective Date

This AD is effective January 14, 2013.

(b) Affected ADs

None.

(c) Applicability

This AD applies to The Boeing Company Model 737–600, –700, –700C, –800, –900, and –900ER series airplanes; certificated in any category; as identified in Boeing Alert Service Bulletin 737–30A1063, Revision 1, dated July 10, 2012.

(d) Subject

Joint Aircraft System Component (JASC)/ Air Transport Association (ATA) of America Code 3030, Pitot/Static Anti-Ice System.

(e) Unsafe Condition

This AD was prompted by reports of flight crew failure to activate air data probe heat. We are issuing this AD to prevent ice from forming on air data system sensors and consequent loss of or misleading airspeed indication on all airspeed indicating systems, which could lead to loss of control of the airplane.

(f) Compliance

Comply with this AD within the compliance times specified, unless already done.

(g) Modification

Within 24 months after the effective date of this AD: Modify the anti-icing system for the angle of attack sensor, the total air temperature, and the pitot probes, in accordance with the Accomplishment Instructions of Boeing Alert Service Bulletin 737–30A1063, Revision 1, dated July 10, 2012.

(h) Credit for Previous Actions

This paragraph provides credit for actions required by paragraph (g) of this AD, if those actions were performed before the effective date of this AD using Boeing Alert Service Bulletin 737–30A1063, dated November 16, 2011, which is not incorporated by reference in this AD.

(i) Alternative Methods of Compliance (AMOCs)

(1) The Manager, Seattle Aircraft Certification Office (ACO), FAA, has the authority to approve AMOCs for this AD, if requested using the procedures found in 14 CFR 39.19. In accordance with 14 CFR 39.19, send your request to your principal inspector or local Flight Standards District Office, as appropriate. If sending information directly to the manager of the ACO, send it to the attention of the person identified in the Related Information section of this AD. Information may be emailed to: *9-ANM-Seattle-ACO-AMOC-Requests@faa.gov.*

(2) Before using any approved AMOC, notify your appropriate principal inspector, or lacking a principal inspector, the manager of the local flight standards district office/ certificate holding district office.

(j) Related Information

For more information about this AD, contact Frank Carreras, Aerospace Engineer, Systems and Equipment Branch, ANM–130S, FAA, Seattle Aircraft Certification Office (ACO), 1601 Lind Avenue SW., Renton, WA 98057–3356; phone: 425–917–6442; fax: 425–917–6590; email: *frank.carreras@faa.gov.*

(k) Material Incorporated by Reference

(1) The Director of the **Federal Register** approved the incorporation by reference (IBR) of the service information listed in this paragraph under 5 U.S.C. 552(a) and 1 CFR part 51.

(2) You must use this service information as applicable to do the actions required by this AD, unless the AD specifies otherwise.

(i) Boeing Alert Service Bulletin 737–30A1063, Revision 1, dated July 10, 2012.

(ii) Reserved.

(3) For service information identified in this AD, contact Boeing Commercial Airplanes, Attention: Data & Services Management, P.O. Box 3707, MC 2H–65, Seattle, WA 98124–2207; telephone 206–544–5000, extension 1; fax 206–766–5680; Internet *https://www.myboeingfleet.com.*

(4) You may view this service information at FAA, Transport Airplane Directorate, 1601 Lind Avenue SW., Renton, WA. For information on the availability of this material at the FAA, call 425–227–1221.

(5) You may view this service information that is incorporated by reference at the National Archives and Records Administration (NARA). For information on the availability of this material at NARA, call 202–741–6030, or go to: *http://www.archives.gov/federal-register/cfr/ibr-locations.html.*

Issued in Renton, Washington, on November 23, 2012.

Ali Bahrami,

Manager, Transport Airplane Directorate, Aircraft Certification Service.

[FR Doc. 2012–29469 Filed 12–7–12; 8:45 am]

BILLING CODE 4910–13–P

CONSUMER PRODUCT SAFETY COMMISSION

[Docket No. CPSC–2012–0037]

16 CFR Part 1500

Codification of Animal Testing Policy

AGENCY: Consumer Product Safety Commission.

ACTION: Final rule.

SUMMARY: The Consumer Product Safety Commission (CPSC or Commission) codifies its statement of policy on animal testing that provides guidance for manufacturers of products subject to the Federal Hazardous Substances Act (FHSA) regarding replacement, reduction, and refinement of animal testing methods.

DATES: Effective January 9, 2013.

FOR FURTHER INFORMATION CONTACT: Leslie E. Patton, Ph.D., Project Manager, Office of Hazard Identification and Reduction, U.S. Consumer Product Safety Commission, 4330 East West Highway, Bethesda, MD 20814; telephone (301) 504–7848; *lpatton@cpsc.gov.*

SUPPLEMENTARY INFORMATION:

A. Background

On June 29, 2012, the Commission issued a notice of proposed rulemaking to amend regulations on the CPSC's animal testing methods under 16 CPR part 1500 to clarify alternative test methods that replace, reduce, or refine animal testing. 77 FR 38754. The final rule on the Commission's regulations on animal testing under 16 CFR part 1500 is published elsewhere in this **Federal Register**. The final rule on revisions to the animal testing regulations is effective 30 days after publication of the rule in the **Federal Register**.

In addition, on June 29, 2012, the Commission also proposed to codify its statement of policy on animal testing to reflect new methods accepted by the scientific community as replacements, reductions, or refinements to animal tests including recommendations of and test methods of the Interagency Coordinating Committee on the Validation of Alternative Methods (ICCVAM; *http://iccvam.niehs.nih.gov/home.htm*). 77 FR 38751. Codification at 16 CFR 1500.232 would make the ICCVAM recommendations and Commission's animal testing policy more accessible and transparent to interested parties. Although the Commission proposed to make the animal testing policy effective on the date of publication in the **Federal Register**, because the animal testing policy references sections of the animal testing regulations in 16 CFR part 1500, we will make the statement of policy effective on the same date, 30 days after publication of the policy in the **Federal Register**. The Commission has also established a Web page on the CPSC's Web site at *http://www.cpsc.gov/library/animaltesting.html* regarding the ICCVAM recommendations and new developments in test methods that replace, reduce, or refine animal testing. After consideration of the comments, the Commission codifies its final statement of policy on animal testing.

B. Response to Comments on the Proposed Policy

In the **Federal Register** of June 29, 2012, we published a proposed statement of policy on animal testing (77 FR 38751). We received two comments on the proposed statement. One commenter was an individual and the other comment was submitted jointly by the Alternatives Research and Development Foundation, American Anti-Vivisection Society, Humane Society of the United States, People for the Ethical Treatment of Animals, and the Physicians Committee for Responsible Medicine. Both commenters support the use of alternative test methods to eliminate or reduce the use of animals.

1. Alternative Test Methods

Comment: One commenter states that alternative test methods approved for testing potentially hazardous substances were too limited as laid out in the Commission's proposal, and requests that the CPSC broaden its recommendations to *in vitro* and *in silico* tests beyond those already approved by the Commission through ICCVAM. Specifically, the commenter recommends adding methods that were already approved by other regulatory bodies, such as the Organisation for Economic Cooperation and Development (OECD) or the European Centre for the Validation of Alternative Methods (ECVAM EURL). The commenter further suggests that § 1500.232(b) should include any ''scientifically acceptable'' non-animal alternative that is ''fit for the purpose,'' not limited to those expressly approved by the Commission, nor to those that had undergone an official regulatory validation process.

Response: The Commission agrees that alternatives outside of those which ICCVAM has approved may be acceptable for hazard testing. For hazard testing for the purpose of labeling under FHSA, alternative test methods beyond those reviewed and recommended by ICCVAM may be acceptable because ICCVAM's purview is not exhaustive. In addition, data derived from scientifically valid testing methods can be used to make hazard determinations for substances regulated under FHSA, assuming tests are reliable, reproducible, and accurate. The Commission encourages hazard testing that supports the replacement, reduction, and refinement of animal test methods while simultaneously maintaining a high degree of scientific integrity. Therefore, if a manufacturer or other entity performs a hazard test for FHSA labeling purposes that has not been previously approved by the Commission (*i.e.,* an ICCVAM-recommended test method or one of the tests described in the current version of the FHSA), CPSC staff will consider the data on a case-by-case basis and, upon review, determine whether to post the test method on the animal testing Web site.

In the final statement of policy, we refer to *in vitro* and *in silico* methods, in general, as alternative test methods that a manufacturer may wish to consider in lieu of animal testing. We also refer generally to methods that have been deemed acceptable by other national or international organizations, but do not refer to them specifically in the regulations on animal testing under 15 CFR 1500.3, 1500.40–42. The CPSC animal testing Web page at *http://www.cpsc.gov/library/animaltesting.html* is the platform on which the CPSC will list alternative methods.

Comment: One commenter states that the guidance should explicitly state that ''when faced with a decision between a non-animal or animal-based approach, the non-animal approach must be taken.''

Response: Although the Commission is issuing this guidance in part to encourage non-animal alternatives to testing, it cannot require manufacturers to adhere to its guidelines. As stated in the CPSC Chronic Hazard Guidelines (57 FR 46626, October, 9, 1992), the Commission does not enforce guidelines as mandatory requirements for manufacturers. A manufacturer may follow a different but scientifically supportable analysis to determine the potential hazard of a substance as reflected in the alternative test methods posted on the CPSC animal testing Web page at *http://www.cpsc.gov/library/animaltesting.html.*

2. *In Vivo* Tests

Comment: One commenter requests that all details on *in vivo* testing procedures be deleted from § 1500.232, including the LD50/LC50 assays at 1500.232(b)(1)(i), the method of testing dermally toxic substances at 1500.232(b)(1)(ii), and the ocular irritation assay at 1500.232(b)(1)(iii).

Response: The FHSA currently defines acute hazards based on animal test results and identifies irritation and toxicity tests that use animals. Although they are not superior, these *in vivo* test methods remain the baseline to which alternative methods are compared and therefore should remain in the text. Furthermore, the *in vivo* testing described in sections of CFR part 1500 does remain an option to manufacturers performing hazard testing of substances. However, the Commission will emphasize that the use of *in vitro* and other alternative test methods, including a weight-of-evidence approach, and prior human experience are recommended over *in vivo* tests whenever possible throughout the statement of policy. Furthermore, the Commission reiterates its preference for reliable human experience over animal test data. These changes are reflected throughout the summary and statement of policy.

3. Dermal Sensitization Test

Comment: One commenter requests the addition of section 1500.232(b)(1)(iv) on alternative test methods for dermal sensitization testing.

Response: The Commission agrees and will add the following section to the statement of animal testing policy:

> Dermal sensitization—An acceptable *in vitro* test method (examples of valid *in vitro* tests are identified on the Commission's animal testing Web site at: *http://www.cpsc.gov/library/animaltesting.html*), or weight-of-evidence analysis is recommended before *in vivo* animal sensitization testing is considered to determine appropriate cautionary labeling. The weight-of-evidence analysis should incorporate any existing data on humans and animals, validated *in vitro* or *in silico* test results and any other relevant physicochemical properties that indicate the substance might be a dermal sensitizer. If there is any indication from this analysis that the substance is sensitizing to the skin, the substance should be labeled appropriately.

4. Other Comments

Comment: One commenter requests that we reorder the paragraphs in § 1500.232(a) to ensure that manufacturers first consider the most human-relevant data and methods in determining appropriate labeling

Response: The Commission has already stated a preference for human over animal data throughout the statement of policy, and will maintain the current order of the paragraphs in the animal testing policy.

List of Subjects in 16 CFR Part 1500

Consumer protection, Hazardous substances, Imports, Infants and children, Labeling, Law enforcement, Reporting and recordkeeping requirements, and Toys.

For the reasons given above, the Commission amends 16 CFR part 1500 as follows:

PART 1500—[AMENDED]

■ 1. The authority for part 1500 continues to read as follows:

Authority: 15 U.S.C. 1261–1278, 122 Stat. 3016.

■ 2. Add § 1500.232 to read as follows:

§ 1500.232 Statement on animal testing policy.

(a) *Summary.* (1) The U.S. Consumer Product Safety Commission issues this statement of policy on animal testing and alternatives to animal testing of hazardous substances regulated under the Federal Hazardous Substances Act (FHSA). The FHSA requires appropriate cautionary labeling on certain hazardous household products to alert consumers to the potential hazard(s) that the products may present. Among the hazards addressed by the FHSA are toxicity, corrosivity, sensitization, and irritation.

(2) In order to determine the appropriate cautionary labeling, it is necessary to have objective criteria by which the existence of each hazard can be determined. Hazards such as toxicity, tissue corrosiveness, eye irritancy, and skin irritancy result from the biological response of living tissue and organs to the presence of the hazardous substance. One means of characterizing these hazards is to use animal testing as a proxy for the human reaction. In fact, the FHSA defines the hazard category of ''highly toxic'' in terms of animal toxicity when groups of 10 or more rats are exposed to specified amounts of the substance. The Commission's regulations under the FHSA concerning toxicity and irritancy allow the use of animal tests to determine the presence of the hazard when human data or existing animal data are not available.

(3) Neither the FHSA nor the Commission's regulations requires animal testing. The FHSA and its implementing regulations only require that a product be labeled to reflect the hazards associated with that product. If animal testing is conducted, Commission policy supports limiting such tests to a minimum number of animals and advocates measures that eliminate or reduce the pain or discomfort to animals that can be associated with such tests. The Commission has prepared this statement of policy with respect to animal testing to encourage the manufacturers subject to the FHSA to follow a similar policy.

(4) In making the appropriate hazard determinations, manufacturers of products subject to the FHSA should use existing alternatives to animal testing whenever possible. These include: prior human experience (*e.g.,* published case studies), *in vitro* or *in silico* test methods that have been approved by the Commission, literature sources containing the results of prior animal testing or limited human tests (*e.g.,* clinical trials, dermal patch testing), and expert opinion (*e.g.,* hazard assessment, structure-activity analysis). If a manufacturer or other entity performs a hazard test for FHSA labeling purposes that has not been previously approved by the Commission, CPSC staff will consider the data on a case-by-case basis and, upon review, determine whether to post the test method on the animal testing Web site. The Commission recommends resorting to animal testing only when the other information sources have been exhausted. At this time, the Commission recommends use of the most humane procedures with the fewest animals possible to achieve reliable results. Recommended procedures are summarized in the following statement and can be accessed on the Commission's Web page at: *http://www.cpsc.gov/library/animaltesting.html.* If a manufacturer or other entity performs a hazard test for FHSA labeling purposes that has not been previously approved by the Commission (*e.g.,* an ICCVAM-recommended test method or one of the tests described in the current version of the FHSA), CPSC staff will consider the data on a case-by-case basis and, upon review, determine whether to post the test method on the animal testing Web site.

(b) *Statement of policy on animal testing.* (1) Neither the FHSA nor the Commission's regulations requires animal testing. Reliable human experience always takes precedence over results from animal data. In the cases where animal tests are conducted, the Commission prefers test methods that reduce stress and suffering in test animals and that use fewer animals while maintaining scientific integrity. To this end, the Commission reviews recommendations on alternative test methods developed by the scientific and regulatory communities. Current descriptions of test method recommendations approved by or known to the Commission can be accessed via the Internet at: *http://www.cpsc.gov/library/animaltesting.html.* The Commission strongly supports the use of scientifically sound alternatives to animal testing. The following parts of this section outline some of these alternatives. Testing laboratories and other interested persons requiring assistance interpreting the results obtained when a substance is tested in accordance with the methods described here, or in following the testing strategies outlined in the section, should refer to the Commission's animal testing Web page at: *http://www.cpsc.gov/library/animaltesting.html.*

(i) *Acute toxicity.* The traditional FHSA animal test for acute toxicity determines the median lethal dose (LD50) or lethal concentration (LC50), the dose or concentration that is expected to kill half the test animals. Procedures for determining the median LD50/LC50 are described in section 2(h)(1) of the Act and supplemented in § 1500.3(c)(1) and (2) and the test method outlined in § 1500.40. The Commission recommends *in vitro* alternatives over *in vivo* LD50/LC50 tests, or using modifications of the traditional LD50/LC50 test during toxicity testing that reduce the number of animals tested whenever possible. Data from *in vitro* or *in silico* test methods that have not been approved by the Commission may be submitted to the Commission for consideration of their acceptability. Commission-approved testing alternatives are identified on the Web site at: *http://www.cpsc.gov/library/animaltesting.html* and include:

(A) *In vitro* and *in vivo* test methods that have been scientifically validated and approved for use in toxicity testing by the Commission;

(B) Valid *in vitro* methods to estimate a starting dose for an acute *in vivo* test;

(C) A sequential version of the traditional LD50/LC50 tests described in § 1500.3(c)(1) and (2) and the test method described in § 1500.40, in which dose groups are run successively rather than simultaneously;

(D) A limit-dose test where the LD50/LC50 is determined as a point estimate, which can still be used to categorize a hazard, although it gives no information on hazard dose-response. In the limit test, animals (10 rats) each receive a single dose of product at 5g per kilogram of body weight. If not more than one animal dies in 14 days, the product is considered to have an LD50 of greater than 5g/kg, and thus, deemed to be nontoxic. Only if two or more animals die is a second group of 10 rats tested (at a lower dose). This procedure reduces the number of animals tested from the 80 to 100 animals involved in a full LD50 test to, typically, 10 to 20 rats per product. This reduction in the number of animals tested is justified because an exact LD50 is not required by either the FHSA or the regulations. The FHSA requires only a categorical determination that the toxicity is greater than 5g/kg, between 50 mg/kg and 5g/kg, or less than 50 mg/kg.

(ii) *Dermal irritation/corrosivity.* An acceptable *in vitro* test method or weight-of-evidence analysis is

recommended before *in vivo* dermal irritation testing is considered to determine appropriate cautionary labeling. The weight-of-evidence analysis should incorporate any existing data on humans and animals, validated *in vitro* or *in silico* test results (valid tests are identified on the Commission's animal testing Web site at: *http://www.cpsc.gov/library/animaltesting.html*), the substance's dermal toxicity, evidence of corrosivity/irritation of one or more structurally related substances or mixtures of such substances, data demonstrating low or high pH (≤2 or ≥11.5) of the substance, and any other relevant physicochemical properties that indicate the substance might be a dermal corrosive or irritant. If there is any indication from this analysis that the substance is either corrosive or irritating to the skin, the substance should be labeled appropriately. If the substance is not corrosive *in vitro,* but no data exist regarding its irritation potential, human patch testing should be considered. If *in vitro* data are unavailable, human patch testing is not an option, and there are insufficient data to determine the weight-of-evidence, a tiered *in vivo* animal test is recommended.

(A) In a tiered *in vivo* dermal study, a single rabbit is tested initially. If the outcome is positive for corrosivity, testing is stopped, and the substance is labeled appropriately. If the substance is not corrosive, two more rabbits should be patch-tested to complete the assessment of skin irritation potential.

(B) If a tiered test is not feasible, the Commission recommends the test method described in § 1500.41. Note that in any *in vivo* dermal irritation test method, the Commission recommends using a semiocclusive patch to cover the animal's test site and eliminating the use of stocks for restraint during the exposure period, thereby allowing the animal free mobility and access to food and water.

(iii) *Ocular irritation.* A weight-of-evidence analysis is recommended to evaluate existing information before any *in vivo* ocular irritation testing is considered. This analysis should incorporate any existing data on humans and animals, validated *in vitro* or *in silico* test data (identified on the Commission's animal testing Web site at: *http://www.cpsc.gov/library/animaltesting.html*), the substance's dermal corrosivity/irritation (primary skin irritants and corrosives are also usually eye irritants and therefore do not need to be tested in the eye), evidence of ocular irritation of one or more structurally related substances or mixtures of such substances, data demonstrating high acidity or alkalinity of the substance, and any other relevant physicochemical properties that indicate the substance might be a dermal corrosive or irritant or ocular irritant.

(A) When the weight-of-evidence is insufficient to determine a substance's ocular irritation, a Commission-approved *in vitro* or *in silico* assay for ocular irritancy should be run to assess eye irritation potential and determine labeling. Examples of Commission-validated *in vitro* assays are identified on the Commission's animal testing Web site at: *http://www.cpsc.gov/library/animaltesting.html*). If no valid *in vitro* test exists, the test strategy for determining dermal corrosion/irritation outlined in paragraph (b)(1)(ii)(B) of this section can be followed to determine ocular irritation.

(B) If the dermal test strategy outlined in section paragraph (b)(1)(ii)(B) of this section leads to a conclusion of not corrosive, a tiered *in vivo* ocular irritation test should be performed, in which a single rabbit is exposed to the substance initially. If the outcome of this initial test is positive, testing is stopped, and the substance is labeled an eye irritant. If the outcome of this initial test is negative, one to two more rabbits are tested for ocular irritation, and the outcome of this test will determine the label. If a tiered test is not feasible, the Commission recommends the test method described in § 1500.42.

(C) When any ocular irritancy testing on animals is conducted, including the method described in § 1500.42, the Commission recommends a threefold plan to reduce animal suffering: The use of preemptive pain management, including topical anesthetics and systemic analgesics that eliminate or reduce suffering that may occur as a result of the application process or from the test substance itself (an example of a typical preemptive pain treatment is two applications of tetracaine ophthalmic anesthetic, 10–15 minutes apart, prior to instilling the test material to the eye); post-treatment with systemic analgesics for pain relief; and implementation of humane endpoints, including scheduled observations, monitoring, and recording of clinical signs of distress and pain, and recording the nature, severity, and progression of eye injuries. The specific techniques that have been approved by the Commission can be found at: *http://www.cpsc.gov/library/animaltesting.html.*

(iv) *Dermal sensitization.* An acceptable *in vitro* test method (examples of valid *in vitro* tests are identified on the Commission's animal testing Web site at: *http://www.cpsc.gov/library/animaltesting.html*), or weight-of-evidence analysis is recommended before *in vivo* animal sensitization testing is considered to determine appropriate cautionary labeling. The weight-of-evidence analysis should incorporate any existing data on humans and animals, validated *in vitro* or *in silico* test results, and any relevant physicochemical properties that indicate the substance might be a dermal sensitizer. If there is any indication from this analysis that the substance is sensitizing to the skin, the substance should be labeled appropriately.

(2) [Reserved].

Dated: November 29, 2012.

Todd A. Stevenson,

Secretary, Consumer Product Safety Commission.

[FR Doc. 2012–29260 Filed 12–7–12; 8:45 am]

BILLING CODE 6355–01–P

CONSUMER PRODUCT SAFETY COMMISSION

[CPSC Docket No. CPSC–2012–0036]

16 CFR Part 1500

Hazardous Substances and Articles; Administration and Enforcement Regulations: Revisions to Animal Testing Regulations

AGENCY: Consumer Product Safety Commission.

ACTION: Final rule.

SUMMARY: The U.S. Consumer Product Safety Commission (CPSC or Commission) amends regulations on the CPSC's animal testing methods under the Federal Hazardous Substances Act (FHSA).

DATES: This rule is effective on January 9, 2013.

FOR FURTHER INFORMATION CONTACT: Leslie E. Patton, Ph.D., Project Manager, Office of Hazard Identification and Reduction, U.S. Consumer Product Safety Commission, 4330 East West Highway, Bethesda, MD 20814; telephone (301) 504–7848; *lpatton@cpsc.gov.*

SUPPLEMENTARY INFORMATION:

A. Background

The Federal Hazardous Substances Act (FHSA), 15 U.S.C. 1261–1278, requires appropriate cautionary labeling on certain hazardous household products to alert consumers to the potential hazards that a product may present. Among the hazards addressed

by the FHSA are products that are toxic, corrosive, irritants, flammable, combustible, or strong sensitizers. The FHSA and the Commission regulations at 16 CFR part 1500 provide certain definitions and test methods related to testing on animals to determine the existence of the hazards addressed by the FHSA.

On June 29, 2012, the Commission issued a notice of proposed rulemaking to amend and to update regulations on the CPSC's animal testing methods under the FHSA. 77 FR 38754. The Commission proposed amendments to the regulations that interpret, supplement, or provide alternatives to definitions of animal test methods used to aid in the classification of hazardous substances under the FHSA.

In addition, on June 29, 2012, the Commission proposed to codify its statement of policy on animal testing to reflect new methods accepted by the scientific community as replacements, reductions, or refinements to animal tests including recommendations and test methods of the Interagency Coordinating Committee on the Validation of Alternative Methods (ICCVAM; *http://iccvam.niehs.nih.gov/home.htm*) approved by the Commission. 77 FR 38751. The proposed codification at 16 CFR 1500.232 would make the ICCVAM recommendations and the Commission's animal testing policy more accessible and transparent to interested parties. The Commission has also established a Web page on the CPSC's Web site at *http://www.cpsc.gov/library/animaltesting.html* regarding the ICCVAM recommendations and new developments in test methods that avoid or further reduce or refine animal testing. The final statement on the CPSC's animal testing policy is published elsewhere in this **Federal Register**.

B. Response to Comments on the Proposed Rule

In the **Federal Register** of June 29, 2012, we published a proposed rule on revisions to the animal testing regulations (77 FR 38754). We received three comments on the proposed rule. Two of the comments were from individuals and the third comment was submitted jointly by the Alternatives Research and Development Foundation, American Anti-Vivisection Society, Humane Society of the United States, People for the Ethical Treatment of Animals, and the Physicians Committee for Responsible Medicine.

1. Non-animal Testing Alternatives

Comment: All three commenters urge the Commission to more strongly consider non-animal testing alternatives. One commenter suggests that the NPR underemphasizes *in vitro* and *in silico* alternatives to animal testing throughout relevant sections of 16 CFR part 1500. The commenter gives examples of *in vitro* tests to support this assertion.

Response: The Commission agrees that *in vitro* and *in silico* tests should be mentioned in the regulation as general options in a testing strategy and the rule has been revised accordingly.

2. Alternatives

Comment: One commenter notes that the Commission's stated preference for human data/experience over animal testing results is not referenced in the relevant sections of 16 CFR part 1500. The commenter also provides a number of examples where *in vivo* test methods were detailed while the preference for alternatives was mentioned only briefly.

Response: The FHSA direct that reliable human experience data take precedence over differing results from animal tests. 15 U.S.C. 1261(h)(2). Therefore, the Commission would always consider human experience with products and substances first, when it exists, followed by a thorough examination of the existing animal database. The Commission likewise recommends this approach to manufacturers who are labeling substances to indicate a hazard. Accordingly, the proposed rule has been revised to make the preference for human data clearer in the regulatory text.

3. In Vivo Testing

Comment: One commenter suggests that the regulations uncouple definitions of toxic effects from specific animal test results and that these animal tests are ''enumerated with such detail as part of the definition [as to be] problematic.'' The commenter urges the Commission to remove nearly all references to the *in vivo* tests that comprise the existing text of 16 CFR 1500.3(c)(1–4), 1500.40, 1500.41, and 1500.42.

Response: The Commission disagrees that the hazard definitions using animal test methods are problematic. The test methods currently described in the FHSA and relevant sections of 16 CFR part 1500 are intended to show how the Commission would make a hazard determination in the absence of human experiential data, existing animal data, or another acceptable alternative, and are not mandatory or even necessarily recommended test methods for manufacturers. These methods set a baseline standard for hazard testing against which alternative tests can be compared for validity and reliability. They serve as the baseline because they have been used traditionally in hazard testing, not because they are considered superior to other methods. Therefore, while we understand the need to be clear on the discretionary nature of *in vivo* testing, these methods cannot be removed from the regulations altogether. However, the proposed rule has been revised to emphasize the use of *in vitro* and other alternative test methods and prior human experience throughout the relevant sections of 16 CFR part 1500.

Other Comments

Comment: One commenter states that CPSC's animal testing guidelines Web site should not be limited to listing ICCVAM test methods, but should include new methods than can replace animal-based tests. In addition, this commenter requests that the Web site contain a process that would allow the public to propose changes to the test methods on the Web site.

Response: We address these comments in further detail in response to the comments on the Final Statement on Animal Testing Policy published elsewhere in this **Federal Register**. In that policy statement we indicate that alternative test methods beyond those reviewed and recommended by ICCVAM may be acceptable. If a manufacturer or other entity performs a hazard test for FHSA labeling purposes that has not been previously approved by the Commission (*i.e.* an ICCVAM-recommended test method or one of the tests described in the current FHSA), the CPSC staff will review such data on a case-by-case basis before it will post any changes on the animal testing policy Web site. Although the Commission welcomes input from the public regarding new test methods, proposed changes to the test methods will be posted on the animal testing guidelines Web page only after review of the data regarding the proposed test method by CPSC staff.

C. Revisions to Animal Testing Regulations

1. *Definition of highly toxic.* Currently, the test methods in § 1500.3(c)(1)(ii)(A) through (C), used in the definitions of oral, inhalation, and dermal toxicity, respectively, each describe a method for defining a substance as *highly toxic.*

Because there are other Commission-approved test methods that may be used

by CPSC staff or the public for toxicity testing and defining a substance as highly toxic, as reflected in the ICCVAM recommendations and outlined in the CPSC's statement of policy on animal testing published elsewhere in this **Federal Register**, the proposed rule added language (in underline) under new § 1500.3(c)(1)(iii) as follows: *A substance that produces a result of 'highly toxic' in any of the approved test methods described in the CPSC's animal testing policy set forth in 16 CFR 1500.232.*

In response to comments that request that the rule contain more references to human experience or *in vitro* or *in silico* tests as non-animal testing alternatives, the final rule provides additional language (in underline) to § 1500.3(c)(1) as follows:

To provide flexibility as to the number of animals tested, *and to emphasize in vitro testing methods,* the following is an alternative to the definition of ''highly toxic'' in section 2(h) of the act (and paragraph (b)(6) of this section).

In addition, the final rule provides additional language (in underline) to § 1500.3(c)(1)(iii) as follows:

A substance that produces a result of 'highly toxic' in any of the approved test methods described in the CPSC's animal testing policy set forth in 16 CFR 1500.232, *including data from in vitro or in silico test methods that the Commission has approved; or a validated weight-of-evidence analysis comprising all of the following that are available: existing human and animal data, structure activity relationships, physicochemical properties, and chemical reactivity data.*

2. *Definition of toxic.* Currently, the test methods in § 1500.3(c)(2)(i)(A) through (C) used in the definitions of oral, inhalation, and dermal toxicity, respectively, each describe a method for defining a substance as *toxic.*

Because there are other Commission-approved test methods that may be used by CPSC staff or the public for toxicity testing and defining a substance as *toxic,* as reflected in the ICCVAM recommendations, and outlined in the CPSC's statement of policy on animal testing, the proposed rule added language (in underline) under new § 1500.3(c)(2)(iii) as follows:

Toxic also applies to any substance that can be labeled as such, based on the outcome of any of the approved test methods described in the CPSC's animal testing policy set forth in 16 CFR 1500.232.

In response to comments that request that the rule contain more references to human experience or *in vitro* or *in silico* tests as non-animal testing alternatives, the final rule provides additional language (in underline) to § 1500.3(c)(2) as follows:

To give specificity to the definition of ''toxic'' in section 2(g) of the act (and restated in paragraph (b)(5) of this section), the following supplements that definition. ''*Toxic*'' *applies to any substance that is* ''*toxic*'' (*but not* ''*highly toxic*'') *on the basis of human experience.* The following categories are not intended to be inclusive.

In addition, in the final rule, the Commission is moving the text from proposed section (iii) to section (i) to more accurately reflect that the text applies to the section on acute toxicity, rather than to create a separate section. Accordingly, the last sentence in § 1500.3(c)(2)(i) has been revised (in underline) as follows:

Toxic also applies to any substance that can be labeled as such, based on the outcome of any of the approved test methods described in the CPSC's animal testing policy set forth in 16 CFR 1500.232, *including data from in vitro or in silico test methods that the Commission has approved; or a validated weight-of-evidence analysis comprising all of the following that are available: existing human and animal data, structure activity relationships, physicochemical properties, and chemical reactivity data.*

3. *Definition of corrosive.* 16 CFR 1500.3(c)(3) currently states that: Corrosive means ''a substance that causes visible destruction or irreversible alterations in the tissue at the site of contact. A test for a corrosive substance is whether, by human experience, such tissue destruction occurs at the site of application. A substance would be considered corrosive to the skin if, when tested on the intact skin of the albino rabbit by the technique described in § 1500.41, the structure of the tissue at the site of contact is destroyed or changed irreversibly in 24 hours or less. Other appropriate tests should be applied when contact of the substance with other than skin tissue is being considered.''

The proposed rule added the following text (in underline) to 16 CFR 1500.3(c)(3):

Corrosive means a substance that causes visible destruction or irreversible alterations in the tissue at the site of contact. A test for a corrosive substance is whether, by human experience, such tissue destruction occurs at the site of application. A substance would be considered corrosive to the skin *if a weight-of-evidence analysis suggests that it is corrosive or if, when tested by the in vivo* technique described in § 1500.41, the structure of the tissue at the site of contact is destroyed or changed irreversibly in 24 hours or less. Other appropriate tests should be applied when contact of the substance with other than skin tissue is being considered. *A substance could also be labeled corrosive based on the outcome of any of the approved test methods described in the CPSC's animal testing policy set forth in 16 CFR 1500.232.*

In response to comments that request that the rule contain more references to human experience or *in vitro* or *in silico* tests as non-animal testing alternatives, the final rule provides additional language (in underline) to § 1500.3(c)(3) as follows:

Corrosive means a substance that causes visible destruction or irreversible alterations in the tissue at the site of contact. A test for a corrosive substance is whether, by human experience, such tissue destruction occurs at the site of application. A substance would be considered corrosive to the skin if a weight-of-evidence analysis suggests that it is corrosive*, or validated in vitro test method suggests that it is corrosive,* or if, when tested by the *in vivo* technique described in § 1500.41, the structure of the tissue at the site of contact is destroyed or changed irreversibly in 24 hours or less. Other appropriate tests should be applied when contact of the substance with other than skin tissue is being considered. A substance could also be labeled corrosive based on the outcome of any of the approved test methods described in the CPSC's animal testing policy set forth in 16 CFR 1500.232, *including data from in vitro or in silico test methods that the Commission has approved; or a validated weight-of-evidence analysis comprising all of the following that are available: existing human and animal data, structure activity relationships, physicochemical properties, and chemical reactivity data.*

4. *Definition of irritant, primary irritant, and eye irritant.* Currently, 16 CFR 1500.3(c)(4) provides that the test methods for *irritant, primary irritant,* and *eye irritant* reference 16 CFR 1500.41 and 1500.42, which each describe a specific animal test method and outcome. For example, 16 CFR 1500.41 states that primary irritation to the skin is measured by a patch-test technique on the abraded and intact skin of the albino rabbit, clipped free of hair. A minimum of six subjects are used in the skin tests. To test for eye irritants, 16 CFR 1500.42 requires the use of six albino rabbits. Such tests require the test material be placed in one eye of each animal, while the other eye remains untreated, to serve as a control to assess the grade of ocular reaction.

The proposed rule added the following language (in underline) to § 1500.3(c)(4):

The definition of irritant in section 2(j) of the act (restated in paragraph (b)(8) of this section) is supplemented by the following: *Irritant* includes primary irritant to the skin, as well as substances irritant to the eye or to mucous membranes. *Primary irritant* means a substance that is not corrosive and that human experience data indicate is a primary irritant; and/or means a substance that results

in an empirical score of five or more when tested by the method described in 1500.41; *and/or a substance that can be considered a primary irritant based on the outcome of any of the approved test methods described in the CPSC's animal testing policy set forth in 16 CFR 1500.232. Eye irritant* means a substance that human experience data indicate is an irritant to the eye; and/or means a substance for which a positive test is obtained when tested by the method described in 1500.42; *and/or means a substance that can be considered an eye irritant based on the outcome of any of the approved test methods described in the CPSC's animal testing policy set forth in 16 CFR 1500.232.*

In response to comments that request that the rule contain more references to human experience or *in vitro* or *in silico* tests as non-animal testing alternatives, the final rule provides additional language (in underline) to § 1500.3(c)(4) as follows:

The definition of irritant in section 2(j) of the act (restated in paragraph (b)(8) of this section) is supplemented by the following: *Irritant* includes primary irritant to the skin, as well as substances irritant to the eye or to mucous membranes. *Primary irritant* means a substance that is not corrosive and that human experience data indicate is a primary irritant; and/or means a substance that results in an empirical score of five or more when tested by the method described in § 1500.41; and/or a substance that can be considered a primary irritant based on the outcome of any of the approved test methods described in the CPSC's animal testing policy set forth in 16 CFR 1500.232, *including data from in vitro or in silico test methods that the Commission has approved; or a validated weight-of-evidence analysis comprising all of the following that are available: existing human and animal data, structure activity relationships, physicochemical properties, and chemical reactivity data. Eye irritant* means a substance that human experience data indicate is an irritant to the eye; and/or means a substance for which a positive test is obtained when tested by the method described in 1500.42; and/or means a substance that can be considered an eye irritant based on the outcome of any of the approved test methods described in the CPSC's animal testing policy set forth in 16 CFR 1500.232, *including data from in vitro or in silico test methods that the Commission has approved; or a validated weight-of-evidence analysis comprising all of the following that are available: existing human and animal data, structure activity relationships, physicochemical properties, and chemical reactivity data.*

5. *Method of Testing Toxic Substances*

The method of testing toxic substances is set forth under 16 CFR 1500.40. This method details an acute dermal toxicity assay using rabbits. The method is referenced in § 1500.3(c)(1)(ii)(C) and (c)(2)(C). The proposed rule added the following text (in underline) to § 1500.40 immediately after the heading titled, ''Method of testing toxic substances'':

Guidelines for testing the toxicity of substances, including testing that does not require animals, are presented in the CPSC's animal testing policy set forth in 16 CFR 1500.232. A weight-of-evidence analysis is recommended to evaluate existing information before in vivo tests are considered. This analysis, when deemed necessary to carry out, should include any of the following: existing human and animal data, in vitro data, structure activity relationships, physicochemical properties, and chemical reactivity. When in vivo testing is necessary, a sequential testing strategy is recommended to reduce the number of test animals.

In response to comments that request that the rule contain more references to human experience or *in vitro* or *in silico* tests as non-animal testing alternatives, the final rule modifies the language (in underline) to § 1500.40 as follows:

Guidelines for testing the toxicity of substances, including testing that does not require animals, are presented in the CPSC's animal testing policy set forth in 16 CFR 1500.232. A weight-of-evidence analysis, *including any of the following: existing human and animal data, structure activity relationships, physicochemical properties; and chemical reactivity, or validated in vitro or in silico testing are recommended to evaluate existing information before in vivo tests are considered. If in vivo testing is conducted, a sequential testing strategy is recommended to reduce the number of test animals.*

6. *Method of Testing Primary Irritant Substances*

The method of testing primary irritant substances is set forth under 16 CFR 1500.41. This method details an acute dermal toxicity assay using rabbits. The method is referenced in § 1500.3(c)(3) and (4). The proposed rule added the following text (in underline) to § 1500.41 immediately after the heading titled, ''Method of testing primary irritant substances'':

Guidelines for testing the dermal irritation and corrosivity properties of substances, including testing that does not require animals, are presented in the CPSC's animal testing policy set forth in 16 CFR 1500.232. A weight-of-evidence analysis is recommended to evaluate existing information before in vivo tests are considered. This analysis should include all of the following that are available: human and animal data, structure activity relationships, physicochemical properties, and dermal toxicity. When in vivo testing is necessary, a sequential testing strategy is recommended to reduce the number of test animals. The method of testing the dermal corrosivity and primary irritation of substances referred to in § 1500.3(c)(3) and (4), respectively, is a patch-test technique on the abraded and intact skin of the albino rabbit, clipped free of hair* * *

In response to comments that request that the rule contain more references to human experience or *in vitro* or *in silico* tests as non-animal testing alternatives, the final rule modifies the language (in underline) to § 1500.41 as follows:

Guidelines for testing the dermal irritation and corrosivity properties of substances, including testing that does not require animals, are presented in the CPSC's animal testing policy set forth in 16 CFR 1500.232. A weight-of-evidence analysis *or a validated in vitro test method* is recommended to evaluate existing information before *in vivo* tests are considered. This analysis should include all of the following that are available: human and animal data, structure activity relationships, physicochemical properties, and dermal toxicity. *If in vivo* testing is *conducted,* a sequential testing strategy is recommended to reduce the number of test animals. The method of testing the dermal corrosivity and primary irritation of substances referred to in § 1500.3(c)(3) and (4), respectively, is a patch-test technique on the abraded and intact skin of the albino rabbit, clipped free of hair * * *.

7. *Test for Eye Irritants*

Section 1500.42 of 16 CFR provides a detailed animal test for eye irritation. The method is referenced in § 1500.3(c)(4), which defines *irritation.* The proposed rule added the following text (in underline) to § 1500.42 immediately after the heading titled, ''Test for eye irritants'':

Guidelines for in vivo and in vitro testing of ocular irritation of substances, including testing that does not require animals, are presented in the CPSC's animal testing policy set forth in 16 CFR 1500.232. A weight-of-evidence analysis is recommended to evaluate existing information before in vivo tests are considered. This analysis should include any of the following: existing human and animal data on ocular or dermal irritation, structure activity relationships, physicochemical properties, and chemical reactivity. When in vivo testing is necessary, a sequential testing strategy is recommended to reduce the number of test animals. Additionally, the routine use of topical anesthetics, systemic analgesics, and humane endpoints to avoid or minimize pain and distress in ocular safety testing is recommended. (a)(1) In the method of testing the ocular irritation of a substance referred to in § 1500.3(c)(4), six albino rabbits are used for each test substance* * *

In response to comments that request that the rule contain more references to human experience or *in vitro* or *in silico* tests as non-animal testing alternatives, the final rule modifies the language (in underline) to § 1500.42 as follows:

Guidelines for *in vivo* and *in vitro* testing of ocular irritation of substances, including testing that does not require animals, are presented in the CPSC's animal testing policy set forth in 16 CFR 1500.232. A weight-of-evidence analysis *or a validated in vitro test method* is recommended to evaluate existing

information before *in vivo* tests are considered. This analysis should include any of the following: existing human and animal data on ocular or dermal irritation, structure activity relationships, physicochemical properties, and chemical reactivity. *If in vivo* testing is *conducted,* a sequential testing strategy is recommended to reduce the number of test animals. Additionally, the routine use of topical anesthetics, systemic analgesics, and humane endpoints to avoid or minimize pain and distress in ocular safety testing is recommended. (a)(1) In the method of testing the ocular irritation of a substance referred to in § 1500.3(c)(4), six albino rabbits are used for each test substance* * *

8. *Editorial changes*

The proposed rule eliminates the reference in § 1500.42(c) to the ''Illustrated Guide for Grading Eye Irritation by Hazardous Substances,'' and the accompanying note. The referenced guide is out of print, and photocopies are rare. Accordingly, the proposed rule amended § 1500.42(c) to reference guidelines from the U.S. Environmental Protection Agency (EPA) and the Organisation for Economic Co-operation and Development (OECD) as follows:

To assist testing laboratories and others interested in interpreting ocular irritation test results, the CPSC animal testing policy Web page at *http://www.cpsc.gov/library/animaltesting.html* will contain the scoring system defined in the U.S. EPA's Test Guideline, OPPTS 870.2400: Acute Eye Irritation [1] or the OECD Test Guideline 405: Acute Eye Irritation/Corrosion.[2]

The only change made to this section was to update the Web page link for the CPSC animal testing guidelines.

C. Impact on Small Businesses

The Commission certifies that this rule will not a have a significant impact on a substantial number of small entities under section 605(b) of the Regulatory Flexibility Act (RFA), 5 U.S.C. 605(b). The Commission's Directorate for Economic Analysis prepared an assessment of the impact of amending the regulations on animal testing. That assessment found that there would be little or no effect on small businesses and other entities because the amendments will not result in product modifications in order to comply, and they will not result in additional testing or recordkeeping burdens.

D. Environmental Considerations

Generally, CPSC rules are considered to ''have little or no potential for affecting the human environment,'' and environmental assessments and environmental impact statements are not usually prepared for these rules (see 16 CFR 1021.5(c)(1)). The Commission does not expect the rule to have any adverse impact on the environment under this categorical exclusion.

E. Executive Orders

According to Executive Order 12988 (February 5, 1996), agencies must state in clear language the preemptive effect, if any, of new regulations. The preemptive effect of regulations such as this proposed rule is stated in section 18 of the FHSA. 15 U.S.C. 1261n.

F. Paperwork Reduction Act

This rule would not impose any information collection requirements. Accordingly, this rule is not subject to the Paperwork Reduction Act, 44 U.S.C. 3501–3520.

G. Effective Date

The Administrative Procedure Act generally requires that a substantive rule be published not less than 30 days before its effective date, unless the agency finds, for good cause shown, that a lesser time period is required. 5 U.S.C. 553(d)(3). The final rule will take effect 30 days after publication in the **Federal Register**.

List of Subjects in 16 CFR Part 1500

Consumer protection, Hazardous substances, Imports, Infants and children, Labeling, Law enforcement, Reporting and recordkeeping requirements, and Toys.

Accordingly, 16 CFR part 1500 is amended as follows:

PART 1500—[AMENDED]

■ 1. The authority citation for part 1500 continues to reads as follows:

Authority: 15 U.S.C. 1261–1278.

■ 2. Section1500.3 is amended by:
■ a. Revising paragraph (c)(1) introductory text;
■ b. Adding paragraph (c)(1)(iii);
■ c. Revising paragraph (c)(2) introductory text;
■ d. Revising paragraph (c)(2)(i) and
■ e. Revising paragraphs (c)(3) and (4).

The revisions and addition read as follows:

§ 1500.3 Definitions

* * * * *

(c) * * *

(1) To provide flexibility as to the number of animals tested, and to emphasize *in vitro* testing methods, the following is an alternative to the definition of ''highly toxic'' in section 2(h) of the act (and paragraph (b)(6) of this section); *Highly toxic* means:

* * * * *

(iii) A substance that produces a result of 'highly toxic' in any of the approved test methods described in the CPSC's animal testing policy set forth in 16 CFR 1500.232, including data from *in vitro* or *in silico* test methods that the Commission has approved; or a validated weight-of-evidence analysis comprising all of the following that are available: existing human and animal data, structure activity relationships, physicochemical properties, and chemical reactivity data.

(2) To give specificity to the definition of ''toxic'' in section 2(g) of the act (and restated in paragraph (b)(5) of this section), the following supplements that definition. ''Toxic'' applies to any substance that is ''toxic'' (but not ''highly toxic'') on the basis of human experience. The following categories are not intended to be inclusive. * * *

(i) The number of animals tested shall be sufficient to give a statistically significant result and shall be in conformity with good pharmacological practices. *Toxic* also applies to any substance that can be labeled as such, based on the outcome of any of the approved test methods described in the CPSC's animal testing policy set forth in 16 CFR 1500.232, including data from, including data from *in vitro* or *in silico* test methods that the Commission has approved; or a validated weight-of-evidence analysis comprising all of the following that are available: existing human and animal data, structure activity relationships, physicochemical properties, and chemical reactivity data.

* * * * *

(3) Corrosive means a substance that causes visible destruction or irreversible alterations in the tissue at the site of contact. A test for a corrosive substance is whether, by human experience, such tissue destruction occurs at the site of application. A substance would be considered corrosive to the skin if a weight-of-evidence analysis suggests that it is corrosive, or validated *in vitro* test method suggests that it is corrosive, or if, when tested by the *in vivo* technique described in § 1500.41, the structure of the tissue at the site of contact is destroyed or changed irreversibly in 24 hours or less. Other appropriate tests should be applied when contact of the substance with

[1] EPA. 1998. Health Effects Test Guidelines, OPPTS 870.2400 Acute Eye Irritation. EPA 712–C–98–195. Washington, DC: U.S. Environmental Protection Agency. (Available: *http://iccvam.niehs.nih.gov/SuppDocs/FedDocs/EPA/EPA_870_2400.pdf*)

[2] OECD. 2002. OECD Guideline for the Testing of Chemicals 405: Acute Eye Irritation/Corrosion. Paris: Organisation for Economic Co-operation and Development. (Available: *http://iccvam.niehs.nih.gov/SuppDocs/FedDocs/OECD/OECDtg405.pdf*)

other than skin tissue is being considered. A substance could also be labeled corrosive based on the outcome of any of the approved test methods described in the CPSC's animal testing policy set forth in 16 CFR 1500.232, including data from *in vitro* or *in silico* test methods that the Commission has approved; or a validated weight-of-evidence analysis comprising all of the following that are available: Existing human and animal data, structure activity relationships, physicochemical properties, and chemical reactivity data.

(4) The definition of irritant in section 2(j) of the act (restated in paragraph (b)(8) of this section) is supplemented by the following: *Irritant* includes primary irritant to the skin, as well as substances irritant to the eye or to mucous membranes. *Primary irritant* means a substance that is not corrosive and that human experience data indicate is a primary irritant; and/or means a substance that results in an empirical score of five or more when tested by the method described in 1500.41; and/or a substance that can be considered a primary irritant based on the outcome of any of the approved test methods described in the CPSC's animal testing policy set forth in 16 CFR 1500.232, including data from *in vitro* or *in silico* test methods that the Commission has approved; or a validated weight-of-evidence analysis comprising all of the following that are available: existing human and animal data, structure activity relationships, physicochemical properties, and chemical reactivity data. *Eye irritant* means a substance that human experience data indicate is an irritant to the eye; and/or means a substance for which a positive test is obtained when tested by the method described in 1500.42; and/or means a substance that can be considered an eye irritant based on the outcome of any of the approved test methods described in the CPSC's animal testing policy set forth in 16 CFR 1500.232, including data from *in vitro* or *in silico* test methods that the Commission has approved; or a validated weight-of-evidence analysis comprising all of the following that are available: existing human and animal data, structure activity relationships, physicochemical properties, and chemical reactivity data.

* * * * *

■ 3. Amend § 1500.40 by revising the introductory text to read as follows:

§ 1500.40 Method of testing toxic substances.

Guidelines for testing the toxicity of substances, including testing that does not require animals, are presented in the CPSC's animal testing policy set forth in 16 CFR 1500.232. A weight-of-evidence analysis, including any of the following: existing human and animal data, structure activity relationships, physicochemical properties; and chemical reactivity, or validated *in vitro* or *in silico* testing are recommended to evaluate existing information before *in vivo* tests are considered. If *in vivo* testing is conducted, a sequential testing strategy is recommended to reduce the number of test animals. The method of testing the toxic substances referred to in § 1500.3(c)(1)(ii)(C) and (c)(2)(iii) is as follows:

* * * * *

■ 4. In § 1500.41, add five sentences at the start of the introductory text to read as follows:

§ 1500.41 Method of testing primary irritant substances.

Guidelines for testing the dermal irritation and corrosivity properties of substances, including testing that does not require animals, are presented in the CPSC's animal testing policy set forth in 16 CFR 1500.232. A weight-of-evidence analysis or a validated *in vitro* test method is recommended to evaluate existing information before *in vivo* tests are considered. This analysis should include all of the following that are available: human and animal data, structure activity relationships, physicochemical properties, and dermal toxicity. If *in vivo* testing is conducted, a sequential testing strategy is recommended to reduce the number of test animals. The method of testing the dermal corrosivity and primary irritation of substances referred to in § 1500.3(c)(3) and (4), respectively, is a patch-test technique on the abraded and intact skin of the albino rabbit, clipped free of hair. * * *

* * * * *

■ 5. Amend § 1500.42 by adding introductory text, revising the first sentence of paragraph (a)(1), and revising paragraph (c) to read as follows:

§ 1500.42 Test for eye irritants.

Guidelines for *in vivo* and *in vitro* testing of ocular irritation of substances, including testing that does not require animals, are presented in the CPSC's animal testing policy set forth in 16 CFR 1500.232. A weight-of-evidence analysis or a validated *in vitro* test method is recommended to evaluate existing information before *in vivo* tests are considered. This analysis should include any of the following: Existing human and animal data on ocular or dermal irritation, structure activity relationships, physicochemical properties, and chemical reactivity. If *in vivo* testing is conducted, a sequential testing strategy is recommended to reduce the number of test animals. Additionally, the routine use of topical anesthetics, systemic analgesics, and humane endpoints to avoid or minimize pain and distress in ocular safety testing is recommended.

(a)(1) In the method of testing the ocular irritation of a substance referred to in § 1500.3(c)(4), six albino rabbits are used for each test substance * * *

* * * * *

(c) To assist testing laboratories and others interested in interpreting ocular irritation test results, the CPSC animal testing policy Web page at *http://www.cpsc.gov/library/animaltesting.html* will contain the scoring system defined in the U.S. EPA's Test Guideline, OPPTS 870.2400: Acute Eye Irritation [1] or the OECD Test Guideline 405: Acute Eye Irritation/Corrosion.[2]

Dated: November 29, 2012.

Todd A. Stevenson,

Secretary, U.S. Consumer Product Safety Commission.

[FR Doc. 2012–29258 Filed 12–7–12; 8:45 am]

BILLING CODE 6355–01–P

CONSUMER PRODUCT SAFETY COMMISSION

16 CFR Part 1700

[CPSC Docket No. CPSC–2012–0005]

Requirements for Child-Resistant Packaging: Products Containing Imidazolines Equivalent to 0.08 Milligrams or More

AGENCY: Consumer Product Safety Commission.

ACTION: Final rule.

SUMMARY: The Consumer Product Safety Commission (CPSC, Commission, or we) is issuing a rule to require child-resistant (CR) packaging for any over-the-counter or prescription product containing the equivalent of 0.08 milligrams or more of an imidazoline, a class of drugs that includes tetrahydrozoline, naphazoline, oxymetazoline, and xylometazoline, in a

[1] EPA. 1998. Health Effects Test Guidelines, OPPTS 870.2400 Acute Eye Irritation. EPA 712–C–98–195. Washington, DC: U.S. Environmental Protection Agency. (Available: *http://iccvam.niehs.nih.gov/SuppDocs/FedDocs/EPA/EPA_870_2400.pdf*)

[2] OECD. 2002. OECD Guideline for the Testing of Chemicals 405: Acute Eye Irritation/Corrosion. Paris: Organisation for Economic Co-operation and Development. (Available: *http://iccvam.niehs.nih.gov/SuppDocs/FedDocs/OECD/OECDtg405.pdf*)

single package. Imidazolines are a family of drugs that are vasoconstrictors indicated for nasal congestion and/or ophthalmic irritation. Products containing imidazolines can cause serious adverse reactions, such as central nervous system (CNS) depression, decreased heart rate, and depressed ventilation in children who accidentally ingest them. Based on the scientific data, the Commission has determined that availability of 0.08 milligrams or more of an imidazoline in a single package, by reason of its packaging, is such that special packaging is required to protect children under 5 years old from serious personal injury or illness due to handling or ingesting such a substance. The Commission takes this action under the Poison Prevention Packaging Act of 1970 (PPPA) and voted to publish this notice in the **Federal Register**.

DATES: *Effective date:* This rule is effective December 10, 2013.

Applicability: This rule applies to products packaged on or after that date.

FOR FURTHER INFORMATION CONTACT: Carol Afflerbach, Compliance Officer, Office of Compliance and Field Operations, Consumer Product Safety Commission, 4330 East West Highway, Bethesda, MD 20814; telephone (301) 504–7529; *cafflerbach@cpsc.gov*.

SUPPLEMENTARY INFORMATION:

I. Background

A. Relevant Statutory and Regulatory Provisions

The Poison Prevention Packaging Act of 1970 (PPPA), 15 U.S.C. 1471–1476, authorizes the Commission to establish standards for the ''special packaging'' of any household substance if: (1) The degree or nature of the hazard to children in the availability of such substance, by reason of its packaging, is such that special packaging is required to protect children from serious personal injury or serious illness resulting from handling, using, or ingesting such substance, and (2) the special packaging is technically feasible, practicable, and appropriate for such substance.

Special packaging, also referred to as ''child-resistant (CR) packaging,'' is: (1) Designed or constructed to be significantly difficult for children under 5 years of age to open or obtain a toxic or harmful amount of the substance contained therein within a reasonable time, and (2) not difficult for ''normal adults'' to use properly. 15 U.S.C. 1471(4). Household substances for which the Commission may require CR packaging include (among other categories) foods, drugs, or cosmetics, as these terms are defined in the Federal Food, Drug, and Cosmetic Act (21 U.S.C. 321). 15 U.S.C. 1471(2)(B). The Commission has issued performance requirements for special packaging. 16 CFR 1700.15, 1700.20.

Section 4(a) of the PPPA, 15 U.S.C. 1473(a), allows the manufacturer or packer to package a nonprescription product subject to special packaging standards in one size of non-CR packaging, only if the manufacturer (or packer) also supplies the substance in CR packages of a popular size, and the non-CR packages bear conspicuous labeling stating: ''This package for households without young children.'' 15 U.S.C. 1473(a), 16 CFR 1700.5.

To protect children younger than 5 years old from serious personal injury following ingestion, the rule requires CR packaging for any over-the-counter (OTC) or prescription product containing the equivalent of 0.08 milligrams or more of an imidazoline (including tetrahydrozoline, naphazoline, oxymetazoline, or xylometazoline) in a single package.

B. Imidazolines

Imidazolines are a family of drugs that are used as decongestants in eye drops and nasal products. Imidazolines are used as topical decongestants because they produce vasoconstriction when administered to the eye or nasal mucosa. In the eye, the imidazolines relieve redness due to minor eye irritations by causing vasoconstriction of the blood vessels on the surface of the eye and eyelid (Facts and Comparisons, Ophthalmic Decongestants, Pharmacology, 2011). The onset of vasoconstriction after topical application is within minutes. As nasal decongestants, imidazolines temporarily relieve nasal congestion or stuffy nose due to the common cold, hay fever, or other upper respiratory allergies (Facts and Comparisons, Nasal Decongestants, Pharmacology 2011). The imidazolines cause vasoconstriction in mucous membranes, which decreases blood flow and leads to shrinking of swollen nasal mucosa and increased drainage of the sinuses.

Topical and nasal administration of imidazolines results in little absorption into the general circulation. Orally ingested imidazolines, however, are absorbed into the general circulation leading to systemic effects. Even though death from ingesting imidazolines is rare, ingestion can result in severe life-threatening consequences, such as central nervous system (CNS) depression and cardiovascular effects. Specific symptoms of CNS depression upon ingestion of imidazolines range from drowsiness to coma, with a concurrent depression of the respiratory system. Other reported CNS side effects include: Headache, lightheadedness, dizziness, tremor, insomnia, nervousness, restlessness, giddiness, psychological disturbances, prolonged psychosis, and weakness. Imidazolines have led to CNS depression and insomnia in different children. Prominent cardiovascular effects in response to overdose include low blood pressure and slowed heart rate. The medical literature and evidence from collected samples demonstrate that despite the danger of ingesting imidazolines, imidazoline-containing products are not manufactured in CR packaging.

Eye drops containing imidazolines are widely available at drug, grocery, and mass market retailers. Imidazoline eye drops generally come in small squeeze bottles. The most common size is the 1/2-ounce (15 milliliters) bottle, and the second most common size appears to be a 1-ounce bottle (30 milliliters). One-quarter ounce (8 milliliters) bottles are also available.

Nasal sprays containing imidazolines are widely available at drug, grocery, and mass market retailers. Some packages are used by rapidly squeezing the bottle to spray the product into a nostril. Other packages have a pump mechanism that activates the spray. As with eye drops, 1/2-ounce containers are the most common container size, and 1-ounce bottles are the second most common size.

We are aware of approximately 45 manufacturers who sell topical decongestant products under about 64 different labels. Because some manufacturers produce both nasal and ophthalmic products, the number of manufacturers within the market for topical decongestants is not the sum of the manufacturers of ophthalmic products, plus the manufacturers of nasal products.

We estimate that approximately 45 million units of ophthalmic decongestants containing imidazolines are sold annually, with estimated annual sales receipts of approximately $180 million. We estimate that approximately 39 million units of nasal products containing imidazolines are sold annually, generating annual sales receipts of approximately $233 million.

Commission staff examined 12 packages—10 eye drops, 1 nasal spray, and 1 nasal drops—of over-the-counter products that contain imidazolines. The 10 eye drop samples were packaged in squeeze-to-dispense plastic dropper bottles. The nasal spray was packaged in a plastic bottle with an attached metered

pump sprayer, and the nasal drop was packaged in a squeeze-to-dispense plastic dropper bottle. All of the eye drop product bottles were finished with continuous threads, and the bottle openings were fitted with plastic dropper plugs. The nasal spray bottle was finished with continuous threads onto which a metered pump dispenser was attached. The pump mechanism was not child resistant. The nasal drops were packaged in a squeeze-dropper bottle, finished with continuous threads, and the bottle opening was fitted with a dropper plug. None of the samples of eye drops, nasal spray, or nasal drops was packaged using special packaging.

C. The Proposed Rule

On January 25, 2012, the Commission issued a notice of proposed rulemaking (NPR) that proposed requiring CR packaging for imidazoline preparations containing 0.08 milligrams or more of imidazolines in a single package. 77 FR 3646.

The Commission received five comments in response to the proposed rule. Two comments address the amount of time necessary to develop, test, and produce CR packaging for imidazolines, and they request additional time beyond the 1-year effective date proposed in the NPR. Two comments pertain to imidazoline nasal and ophthalmic packaging, and one comment concerns the derivation of the proposed regulation level of 0.08 milligrams or more of imidazolines in a single package. We respond to each of these comments below.

Effective Date

Comment: Two commenters indicate that the proposed effective date of 1 year is too short. One commenter concludes: ''it is not feasible for manufacturers to comply with the proposed one (1) year effective date'' and opines that 2 years would be required at a minimum. Regarding nasal products, the commenter contends that this amount of time is required because it will probably be necessary to replace the commonly used single-piece cap with two-component CR protection caps. The commenter also notes that most ophthalmic finishes [1] are 13mm–15mm; that there are no CR closures available smaller than 18mm; and therefore, new CR packages will also be required for ophthalmic products. The commenter provides a timeline identifying the various steps of the CR packaging development, testing, and approval process, and the time range for the expected completion of each stage. The commenter requests that the Commission consider a 1-year stay of enforcement in addition to the 1-year effective date recommended in the NPR to allow manufacturers 2 years after publication of the rule to comply. This commenter also states that additional time beyond the one year effective date and one year stay of enforcement may be required by some manufacturers, especially if the products in question are subject to U.S. Food and Drug Administration (FDA) requirements for new drug applications (NDAs) or abbreviated new drug applications (ANDAs). This additional approval process, the commenter reports, could require an additional 6 to 12 months. This commenter also requests that manufacturers be granted extended stays of enforcement on a case-by-case basis, if required.

A second commenter states that it manufactures sterile eye drops that require ''specialized aseptic processing,'' notes that the process for developing CR packages suitable for sterile ophthalmic products is complex and ''based upon historical experience with the regulated design and qualification activities required for aseptically filled sterile products,'' and requests that the effective date of the rule be extended to 24 months.

Response: We agree with the first commenter's analysis of the steps necessary to comply with a CR packaging requirement and the time frames associated with each step. We also agree with the second commenter's statement that producing sterile products will take 24 months, such that a conditional 12-month stay of enforcement is warranted. We address our assessment of the anticipated duration of each step in the process of developing, testing, and producing CR packaging, and we highlight each step identified in the commenter's submission. The first commenter states that design development will take 2 to 4 months, and we believe that this range is typical for modern computer-assisted design processes. We note that there are several nonpatented designs, and one patented design for CR packaging for imidazoline products that, if purchased or licensed by a manufacturer, could reduce the duration of the design development stage to 1 month or less. The commenter states that prototype tooling will take from 4 to 6 months, and we have been advised by independent sources that mold tool production typically takes 4 to 5 months, with an additional month for production testing to ensure that the mold tool can be used at the intended production rate. The commenter estimates that CR protocol testing will take approximately 3 months, and we have been advised by CR protocol test providers that such testing for child-resistant and senior-friendly packaging typically takes 2 to 4 months, depending on the complexity of the CR system. The commenter states that industrial scale-up for packaging and validation will take from 7 to 11 months because of the possibility that existing filling and capping equipment will need to be replaced, or at least significantly modified, depending on the design of the CR closure. Independent sources have advised us that this work should take less than 6 months if a similar sterile process is already in place and between 6 and 12 months if new equipment must be installed. According to the commenter, adoption and validation of the new filling line will take between 3 and 6 months, which is the time range provided by manufacturers of similar products in connection with previous regulatory activity. The commenter states that stability testing will take between 3 and 12 months, a timeframe that is consistent with FDA Stability Test Guidelines of 1 year for regular stability testing and 6 months for accelerated stability testing, which is intended to increase the rate at which the degradation reactions take place. The commenter states that the FDA review process for an NDA or an ANDA can take from 6 months to a year. The FDA advises that 10 months is the median review time for NDAs, while the ANDA review process typically does not take as long; however, permission must be obtained before filing an ANDA, which can take up to 6 months alone.

Based on the foregoing review and analysis of the steps necessary to develop, test, and produce CR packaging for products that contain imidazolines, as well as the time frames for each of those steps, the Commission agrees that more than 1 year may well be necessary. Thus, the Commission will grant a conditional 1-year stay of enforcement to provide additional time to produce CR packaging for these products. This issue is discussed further in Section VI of the preamble.

Packaging Issues

Comment—One commenter notes that the NPR failed to consider one type of nasal spray package. The package in question ''is a glass bottle which houses the imidazoline drug product, with a crimped seal holding the pump in place and with [a] detachable nozzle.'' The

[1] The word ''finish,'' in this sense, refers to the protruding threads on the bottle's opening, which hold the cap or closure. A container and its corresponding closure must have matching finishes.

metered pump is housed in a metal case, the rim of which is crimped to the glass bottle. A plastic nozzle is placed over the pump, and the overcap is attached to the nozzle. Consumers access the product by squeezing the package between the thumb and first two fingers, causing an aerosolized form of the product to be released from the nozzle's tip.

The commenter believes that this package is inherently child resistant because it is a unit-dose package. The commenter requests that CPSC staff provide clarification ''as to what could constitute a pass or failure of such a package.''

Response: We disagree with the commenter's fundamental premise that unit-dose packages are inherently child resistant. In fact, we believe that unit-dose packages are not inherently CR. It is likely that a child can easily access the contents because neither the pumping action, nor the overcap or nozzle attachments are CR, and it is reasonably foreseeable that a child could access more than the regulated quantity of the contents. Either the pump action or the overcap must be child resistant.

Comment—One commenter asks: ''for nasal sprays that contain Imidazoline equivalent to 0.08 milligrams or more, is Child-Resistant packaging required for crimp-on pumps?'' The commenter acknowledges that continuous thread (CT) closures and squeezable packages permit a child to have access to the entire contents, but states that metered-dose pumps crimped onto a rigid bottle would permit a child access to ''only one dose at a time.'' In addition, the commenter states: ''it is not likely to be ingested due to its aerosol form.''

Response—As stated in the response to the previous comment, unit-dose packaging is not inherently CR. Child-resistant packaging is required for the pump action and/or the overcap. We also disagree that an aerosolized form of the product would not be ingested by a child.

Regulated Level of Imidazoline

Comment— One commenter asks whether the lowest observed adverse effect level (LOAEL) (*i.e.,* 0.75 mg) should first be normalized to mg/kg and then extrapolated to a 25-pound child before applying a tenfold safety factor, resulting in a no observable adverse effect level (NOAEL) of 0.18 mg.

Response—The proposed regulated level (0.08 mg imidazoline) was based upon an actual imidazoline case with a safety factor applied to the dose ingested. Notably, ingestions expressed as normalized doses show that adverse effects occurred at levels within about the same range of imidazoline (0.1–0.3 mg/kg). Moreover, another case in the medical literature documents an adolescent who developed persistent cardiovascular and neurological effects after ingestion of approximately 0.07 to 0.1 mg/kg of tetrahydrozoline, which is also consistent with the proposed imidazoline level *e.g.,* 0.07 mg/kg (lower end of range) × 11.4 kg child = ~ 0.8 mg ÷ 10 fold-safety factor = 0.08 mg.

II. Toxicity of Imidazolines

The Commission's Directorate for Health Sciences reviewed the toxicity of imidazolines. Imidazolines are used as topical decongestants because they produce vasoconstriction when administered to the eye or nasal mucosa. In the eye, the imidazolines relieve redness due to minor eye irritations by causing vasoconstriction of the blood vessels on the surface of the eye and eyelid (Facts and Comparisons, Ophthalmic Decongestants, Pharmacology, 2011). The onset of vasoconstriction after topical application is within minutes. As nasal decongestants, imidazolines temporarily relieve nasal congestion or stuffy nose due to the common cold, hay fever, or other upper respiratory allergies (Facts and Comparisons, Nasal Decongestants, Pharmacology 2011). The imidazolines cause vasoconstriction in mucous membranes, which decreases blood flow and leads to shrinking of swollen nasal mucosa and increased drainage of the sinuses.

The therapeutically effective dose of imidazolines occurs within a narrow dose range, with toxic effects occurring at doses close to, or at, therapeutic levels. CNS depression (ranging from drowsiness to deep sedation) may occur after recommended doses in infants. Overdoses (doses not specified) of these medications have caused initial spikes of high blood pressure, leading to slowed heart rate, drowsiness, and rebound low blood pressure in adults. A shock-like syndrome with abnormally low blood pressure and slowed heart rate may also occur. Warnings on tetrahydrozoline- and naphazoline-containing OTC drugs state that their use may cause CNS depression, leading to coma in pediatric patients. Xylometazoline and oxymetazoline symptoms of overdose include: extreme tiredness, sweating, dizziness, a slowed heartbeat, and coma.

When the drug is absorbed, it can act systemically within the body. Topical administration of imidazolines to the eye produces local effects to the blood vessels of the eye, but little is absorbed into the general circulation. (For purposes of this document, we interpret ''absorption'' as the passage of a drug from its site of administration into the blood plasma.)

Nasal administration of imidazolines causes an intense degree of vasoconstriction, and therefore, negligible absorption of the drug into the general circulation (POISINDEX,® 2011). However, with oral ingestion, imidazolines are absorbed into the general circulation, leading to systemic effects. These drugs are absorbed quickly, and symptoms can occur in as little as 1 hour, peaking at 8 hours, and resolving after 12–36 hours. Even though the symptoms resolve in a relatively short amount of time, ingestion of imidazolines can result in severe life-threatening consequences, including decreased breathing, decreased heart rate, and loss of consciousness, which require hospitalization to ensure recovery.

FDA regulations pertaining to ''Cold, Cough, Allergy, Bronchodilator, and Antiasthmatic Drug Products for Over-the-Counter Human Use,'' at 21 CFR 341.80(c)(2)(iv), require the product label for products containing naphazoline hydrochloride at a concentration of 0.05 percent to state: ''Do not use this product in children under 12 years of age because it may cause sedation if swallowed.'' Specific symptoms of CNS depression upon ingestion of imidazolines range from drowsiness to coma, with a concurrent depression of the respiratory system. Other observed CNS side effects include: Headache, lightheadedness, dizziness, tremor, insomnia, nervousness, restlessness, giddiness, psychological disturbances, prolonged psychosis, and weakness. Imidazolines have led to CNS depression and insomnia in different individuals. The insomnia, seen in a few cases, may be an unpredictable, idiosyncratic reaction (*i.e.,* a drug effect that occurs in a small number of people due to age, genetics, or disease state). Prominent cardiovascular effects in response to overdose include rebound low blood pressure and slowed heart rate.

No specific treatment for imidazoline overexposure exists. Naloxone (an opioid blocker) has been used without consistent success. Gastric lavage is not recommended more than 1 hour after ingestion because the imidazolines are absorbed quickly after ingestion, leading to CNS depression and a greater risk of aspiration into the lungs. Activated charcoal may be used up to 1 hour after ingestion; but again, due to the CNS depression, there is a greater risk of aspiration into the lungs. Therefore, treatment of the clinical effects from

imidazolines is supportive, based on symptoms. For example, mechanical respiration would be administered to those with severe respiratory depression.

III. Ingestion and Injury Data

As discussed more extensively in the NPR, staff reviewed several sources for information on adverse health effects from ingestion of imidazolines. These sources are the National Electronic Injury Surveillance System (NEISS), and the FDA's Adverse Event Reporting System (AERS).

The CPSC's Directorate for Health Sciences maintains the Children and Poisoning (CAP) system, a subset of NEISS records containing additional information obtained through NEISS involving children under 5 years old. NEISS is a statistically valid injury surveillance and follow-back database that the Commission maintains of consumer product-related injuries occurring in the United States. Injury data are gathered from the emergency departments (ED) of approximately 100 hospitals selected as a probability sample of all 5,000+ U.S. hospitals with emergency departments. The system's foundation rests on emergency department surveillance data, but the system also has the flexibility to gather additional data at either the surveillance or the investigation level. Surveillance data enable the Commission to make timely national estimates of the number of injuries associated with (but not necessarily caused by) specific consumer products. This data also provides evidence of the need for further study of particular products. Subsequent follow-back studies yield important clues to the cause and likely prevention of injuries and deaths. For additional information on NEISS, see the CPSC's Web site at: *http://www.cpsc.gov/cpscpub/pubs/3002.html.*

CAP includes data on each pediatric poisoning, chemical burn, or ingestion case reported from a NEISS hospital, as well as data on some ingestions that could lead to poisoning. We searched the CAP database for incidents between January 1997 and December 2011, involving household products that typically contain imidazolines. During that time, there were an estimated 6,650 emergency room-treated injuries associated with household products containing imidazolines involving children under 5 years old. Table 1 below shows the injury estimates for each of the product groups involved in these incidents. Four-fifths of the estimated injuries (82 percent) involved eye drops.

TABLE 1—ESTIMATED IMIDAZOLINE PRODUCT-RELATED INJURIES TO CHILDREN UNDER 5 YEARS OLD, 1997–2011, BY PRODUCT GROUP

Product	Estimated injuries	Coefficient of variation	Sample size	95% Confidence interval
Eye drops	5,437	0.18	161	3,564 – 7,309
Nose Sprays [2]	1,213	0.29	37	534 – 1891
Total	6,650	0.16	198	4,550 – 8,749

Source: U.S. Consumer Product Safety Commission National Electronic Injury Surveillance System and Children and Poisoning System, 2011.

As set forth in tabular form in the NPR, In-Depth Investigations (IDIs) were assigned in connection with certain NEISS-reported imidazoline ingestion incidents. A selection of these IDIs reveals various scenarios in which children between the ages of 13 months and 4 years gained access to imidazoline products including young children who removed caps from eye drop bottles left within their reach; obtained an eye drop bottle from an older sibling; used a chair to access an eye drop bottle in a medicine cabinet; and took a bottle of eye drops out of his mother's purse. *See* NPR, Table 2, section III.A (77 FR 3649), for a summary of IDIs of selected incidents.

The AERS is a database of voluntary reports from health care professionals and consumers, along with mandatory reports from manufacturers. AERS is maintained by the FDA and contains reports of adverse events and medication errors for all FDA-approved drugs and therapeutic biologic products. We asked the FDA for all AERS reports mentioning the imidazolines tetrahydrozoline, oxymetazoline, xylometazoline, or naphazoline. FDA provided 1,041 reports for 772 distinct cases for us to review involving both children and adults occurring between October 1968 and August 2010. We checked for cases related to imidazolines, excluded the cases with concomitant drugs, and determined that 67 cases (with 115 total reports) were in scope for consideration in this rulemaking.

Reports through the AERS system show a wide variety of adverse events associated with the use of imidazolines across all ages. The top three system/organ classes with reported adverse events were psychiatric disorders (52 reports); nervous system disorders (47 reports); and respiratory, thoracic, and mediastinal disorders (38 reports). Sixty-two out of 67 in-scope cases (93 percent) reported an adverse event in one of the top three system/organ classes. (Reports can include more than one adverse event, so individual reports may be recorded in more than one system/organ class.) Our review of these cases is contained in the January 11, 2012, Staff Briefing Package: *http://www.cpsc.gov/LIBRARY/FOIA/FOIA12/brief/imidazolines.pdf.*

The volumes of imidazoline ingestions in children (under the age of 5) that were reported from two sources, the FDA's AERS database (MedWatch reports) and the medical literature, ranged from several drops to a high of 30 mL (2 tablespoons). The volume ingested was unknown in several imidazoline cases. As set forth in Table 3 in the NPR, very serious adverse effects occurred in response to small oral doses of imidazolines. For example, a 2-year-old child who ingested between 1 and 1.5 mg of tetrahydrozoline, experienced decreased blood pressure and respiration, and he was placed on mechanical respiration in the pediatric intensive care unit for 18 hours. Also, a 16-month-old child who ingested between 1.25 and 2.5 mg of tetrahydrozoline experienced decreased heart rate, depressed respiration, and was admitted to the hospital overnight.

In MedWatch reports of adverse events occurring in response to ingestion of imidazolines, 43 cases occurred in children under 5 years old.

[2] The estimate for this category is highly variable due to small sample size and high coefficient of variation. These numbers should be interpreted with caution.

Tetrahydrozoline ingestions constituted the majority of the cases (88 percent). There were no reported deaths related to imidazoline ingestion. *See: http://www.cpsc.gov/LIBRARY/FOIA/FOIA12/brief/imidazolines.pdf:* January 11, 2012, Staff Briefing Package, for a complete list of cases.

The most recent imidazoline ingestion case cites the lowest dose of ingestion of which we are aware that caused severe adverse symptoms in a child. The case involved a 25-day-old infant who suffered apnea after being treated with tetrahydrozoline nasal drops (0.05 percent). The mother inadvertently administered the nasal drops by the oral route three times per day with 0.5 ml/day (0.25 mg). The immature kidney and liver function of the newborn caused the drugs to clear the newborn's system more slowly than in an adult. CPSC staff reviewing this case report considered the three doses of nasal drops to be additive and calculated the total dose for this case to be 0.75 mg. After the second dose, the child was not feeding well and had low muscle tone. Two hours after the second dose, he developed apnea. After the third dose was administered, the child was brought to the hospital and admitted with a respiratory rate of four breaths per minute and a slowed heart rate. The infant was treated with naloxone, resolving the apnea and bradycardia. After 2 days, the child was in good condition and was discharged. After follow-up 10 days later, the child was in normal condition (Katar et al. 2010).

Our review of the ingestion data is contained in: *http://www.cpsc.gov/LIBRARY/FOIA/FOIA12/brief/imidazolines.pdf:* January 11, 2012, Staff Briefing Package.

IV. Level for Regulation

The Commission is issuing a rule requiring special packaging for any over-the-counter or prescription product containing the equivalent of 0.08 milligrams or more of an imidazoline in a single package. The absorption of imidazolines after oral ingestion can lead to unpredictable and profound CNS depression, including depressed respiration and cardiovascular events. Data indicate that children under 5 years old are accidentally ingesting imidazoline-containing products. Even though death from imidazoline exposure is rare, many of these events result in serious life-threatening consequences requiring hospitalization and intensive care monitoring for recovery. *See* NPR, Section Table 3, section III.C (77 FR 3650), for a summary of relevant cases of imidazoline ingestion.

Mindlin (1966) reported a case in which a 1-year-old girl ingested ½ to 1 teaspoon (2.5–5 mL) of tetrahydrozoline eye drops and suffered CNS depression with slowed respiration and decreased heart rate. Based on this ingestion, recent publications define 2.5 mL tetrahydrozoline (0.05 percent, 1.25 mg) as the dose at which serious toxicity from imidazoline exposure can occur after ingestion (Holmes and Berman, 1999; Eddy and Howell 2000). The preamble to the proposed FDA rule for OTC nasal decongestants reported that the minimum oral dose of oxymetazoline in an adult causing measurable cardiovascular effects (on blood pressure and heart rate) was 1.8 mg of oxymetazoline (41 FR 38312, 38398 (September 9, 1976)). This minimum dose may be lower for children because they appear to be more sensitive to imidazoline effects than adults (Brainerd and Olmstead, 1956). Cases indicate that ingestion of as little as 0.75 mg of imidazolines can result in serious illness in children, requiring supportive therapy (Katar et al., 2010; Summary see Table 3). The most recent case of imidazoline ingestion is reviewed in section III of this preamble. It involved a 25-day-old infant who suffered apnea after being treated with tetrahydrozoline nasal drops (0.05 percent). CPSC staff reviewing this case report calculated the total dose for this case to be 0.75 mg, which is the lowest dose the ingestion of which we are aware, caused severe adverse symptoms in a child.

Because serious effects on the heart and breathing rates occur with the ingestion of as little as 0.75 mg of tetrahydrozoline, we consider this the lowest observed adverse effect level (LOAEL). All of the imidazolines cause potent central and peripheral sympathetic effects, but tetrahydrozoline has the highest potency for CNS sedative/depressive effects and the lowest potency for cardiac effects. Oxymetazoline and naphazoline are the most potent imidazolines for peripheral cardiac effects and have an 8–10 times lower maximum daily dose than tetrahydrozoline (0.4 mg, 0.3 mg and 3.2 mg, respectively). Xylometazoline and oxymetazoline have a longer duration of action than tetrahydrozoline (12 hrs., 10 hrs., and 4–6 hrs., respectively).

Applying a safety factor of 10 to the LOAEL to derive a recommended regulated level of 0.08 mg for all imidazolines is appropriate in order to protect children from serious health effects following ingestion of this family of drugs. The level of 0.08 mg would require all known imidazolines currently on the market to be placed in CR packaging. The assumptions underlying the use of safety factors are that by using these factors, both the public health and sensitive populations are protected. Further assumptions hold that humans are somewhere between 10 and 1,000 times more sensitive to some toxic agents than animals, and adults are less sensitive than children. Hence, a safety assessment can be conducted using the proper toxicological evaluation with different populations to establish the NOAEL (no observable adverse effect level) or its equivalent. We used a tenfold safety factor to divide the LOAEL to reach a NOAEL level.

The regulated dose level is expected reasonably to protect children under 5 years of age from serious personal injury or illness. The Commission proposed this level and received one comment on it, which we addressed in Section I of the preamble.

V. Statutory Considerations

A. Hazard to Children

As noted above, the toxicity data concerning children's oral ingestion of imidazolines demonstrate that they can cause serious illness and injury to children. Moreover, imidazolines are available to children in common household products, such as eye drops and nasal sprays. Products containing imidazolines currently do not use CR packaging. The Commission concludes that a regulation is needed to ensure that products subject to the regulation will be placed in CR packaging by any current, as well as new manufacturers.

Pursuant to Section 3(a) of the PPPA, 15 U.S.C. 1472(a), the Commission finds that the degree and nature of the hazard to children from handling, using, or ingesting imidazolines is such that special packaging is required to protect children from serious illness. The Commission bases this finding on the toxic nature of imidazolines and the accessibility of products containing imidazolines in the home.

B. Technically Feasibility, Practicability, and Appropriateness

In issuing a standard for special packaging under the PPPA, the Commission also is required to find the special packaging is ''technically feasible, practicable and appropriate.'' 15 U.S.C. 1472 (a)(2). For special packaging to be technically feasible, the technology must be available, or can be readily developed and implemented to produce packaging that conforms to established standards. A package is practicable if the special packaging is adaptable to modern mass production

and assembly line techniques. Finally, packaging is appropriate if the packaging will adequately protect the integrity of the substance and will not interfere with its intended storage or use. All three of these conditions must be met before we can require special packaging for a product.

The definition of ''packaging'' is ''the immediate package or wrapping in which any household substance is contained for consumption, use, or storage by individuals in or about the household.'' The PPPA defines ''special packaging'' as packaging that is designed or constructed to be significantly difficult for children under 5 years of age to open or obtain a toxic or harmful amount of substance within a reasonable time and not difficult for normal adults to use properly. 15 U.S.C. 1471(4). The child-resistance and adult-use-effectiveness of special packaging are measured by performance, testing packaging with children and senior adults, respectively.

We evaluated packaging representative of OTC products that contain imidazolines. The specimens represent products from all four imidazoline families: naphazoline hydrochloride (HCL), oxymetazoline HCL, tetrahydrozoline HCL, xylometazoline, and a naphazoline HCL combination product. None of the samples used special packaging. The eye drops were packaged in squeeze-to-dispense plastic dropper bottles. The nasal spray was packaged in a plastic bottle with an attached metered-pump sprayer, and the nasal drops were packaged in a squeeze-to-dispense plastic dropper bottle. *See* January 11, 2012, Staff Briefing Package, for a more detailed discussion of the products: *http://www.cpsc.gov/library/foia/foia12/brief/imidazolines.pdf.*

With changes to package size and/or type, certain types of packaging, such as ASTM Type IA, ASTM Type ID, and a CR metered-pump sprayer design, are available to the market to replace the non-CR continuously threaded (NCRCT) and the non-CR (NCR) metered-spray pump packages. Product packaging assembly line techniques used for the NCR packages can be adapted for some of the CR packages already in the marketplace. Other product manufacturers may use packages that could require changes in assembly- and filling-line techniques. New package sizes also may need to be designed. These new packages would require new tools to be produced. It could take up to 2 years from initiating tool design to final production of a new package, depending upon the complexity of the package. The Commission did not receive any comments asserting that CR packaging for products containing imidazolines was not technically feasible, practicable, or appropriate; although two comments addressed the amount of time required to develop, test, and produce CR packaging for products containing imidazolines. As will be discussed in further detail in Section VI, we have determined that a 12-month effective date, with an additional 12-month conditional stay of enforcement will provide sufficient time for manufacturers to produce CR packaging in compliance with this rule.

Based on the foregoing, the Commission concludes that available data support the findings that CR packaging for household products containing imidazolines is technically feasible, practicable, and appropriate.

C. Other Considerations

In establishing a special packaging standard under the PPPA, the Commission must consider the following:

1. Reasonableness of the standard;
2. Available scientific, medical, and engineering data concerning special packaging and childhood accidental ingestions, illness, and injury caused by household substances;
3. Manufacturing practices of industries affected by the PPPA; and
4. Nature and use of the household substance.

15 U.S.C. 1472(b). The Commission has considered these factors with respect to the various determinations made in this notice, and finds that the rule is reasonable and otherwise appropriate.

VI. Effective Date

The PPPA provides that no regulation shall take effect sooner than 180 days or later than 1 year from the date such final regulation is issued, except that, for good cause, the Commission may establish an earlier effective date if it determines an earlier date to be in the public interest. 15 U.S.C. 1471n.

The Commission stated in the preamble to the NPR that because it could take up to 1 year to produce a new package for some companies, any final rule would become effective 1 year after publication of the final rule in the **Federal Register**.

As discussed in section I.C. of this preamble, the Commission received comments indicating that more than 12 months would be necessary to design, develop, test, and manufacture CR packaging for many of the products containing imidazolines currently on the market. Two commenters indicated that a design could be modified, tested, and in commercial use in approximately 24 months. The Commission agrees that this time seems reasonable because companies will need to develop custom packaging, and the FDA must approve the packaging for acceptable sterilization and stability qualities.

Because there are more than 60 products manufactured by approximately 45 companies that will be affected by this rule, and because the vast majority of these companies will likely require more than 1 year to comply with this rule, the Commission has determined to grant a 12-month conditional stay of enforcement of the rule for products containing the equivalent of 0.08 milligrams of imidazolines in one package, rather than require each manufacturer to request a stay of enforcement for each affected product. The Commission believes that it is important to establish accountability in meeting the CR requirements for products containing imidazolines within 24 months of the publication of this rule.

Therefore, the Commission sets the following conditions for the 1-year stay of enforcement. First, the manufacturer of an imidazoline product containing the equivalent of 0.08 milligrams of imidazolines or more must notify the Commission prior to the effective date of the final rule of its intent to avail itself of the stay, which notice shall include a detailed time line setting forth the steps necessary to produce CR packaging for its product(s) and the range of time anticipated for completion of each step. Manufacturers should be aware that submitting the required notice on or near the effective date of the rule may not allow Commission staff sufficient time to review their notice for completeness prior to the effective date of the rule. Second, each manufacturer providing notice of its intent to avail itself of the stay must submit quarterly reports to the Commission for each affected product, beginning on the effective date of the rule, and on or before the first day of each subsequent quarter during the one year stay period. The quarterly report must provide the following information: (a) Proposed packaging specifications; (b) estimated initial production date; (c) progress made and/or steps completed during the quarterly reporting period; and (d) reports of any incidents or exposures involving the firm's imidazoline-containing products that are subject to the rule. If a manufacturer fails to provide the above-referenced notice in a timely fashion or timely submit any quarterly report, its imidazoline-containing products will be subject to enforcement of the CR packaging

requirement set forth in this rule as of the effective date of the rule.

The rule would add a new paragraph 33 to 16 CFR 1700.14(a), which contains a list of substances requiring special packaging. Pursuant to § 1700.14(a), all substances listed in § 1700.14 must meet the requirements for special packaging contained in § 1700.20(a) (on testing procedures for special packaging). Section 1700.14(a)(33) provides that any over-the-counter or prescription product containing the equivalent of 0.08 milligrams or more of an imidazoline (tetrahydrozoline, naphazoline, oxymetazoline, or xylometazoline) in a single package, must be packaged in accordance with the provisions of § 1700.15(a), (b), and (c). Section 1700.15(a) contains general requirements for special packaging, such as the special packaging must continue to function with the effectiveness specifications set forth in § 1700.15(b). Section 1700.15(b), pertaining to effectiveness specifications, provides criteria that special packaging tested pursuant to § 1700.20 must meet. Finally, § 1700.15(c) provides that special packaging subject to this paragraph (c) may not be reused.

VII. Environmental Impact

Generally, our regulations are considered to have little or no potential for affecting the human environment, and environmental assessments and impact statements are not usually required. *See* 16 CFR 1021.5(a). More specifically, requiring CR packaging for certain imidazoline-containing products is not expected to have an adverse impact on the environment. Accordingly, the rule falls within the categorical exclusion in 16 CFR 1021.5(b)(2) for product certification rules and an environmental assessment or environmental impact statement is not required.

VIII. Executive Order 12988 (Preemption)

According to Executive Order 12988 (February 5, 1996), agencies must state in clear language the preemptive effect, if any, of new regulations. Section 7 of the PPPA provides that, generally, when a special packaging standard issued under the PPPA is in effect, ''no State or political subdivision thereof shall have any authority either to establish or continue in effect, with respect to such household substance, any standard for special packaging (and any exemption therefrom and requirement related thereto) which is not identical to the [PPPA] standard.'' 15 U.S.C. 1476(a). A state or local standard may be excepted from this preemptive effect if: (1) The state or local standard provides a higher degree of protection from the risk of injury or illness than the PPPA standard; and (2) the state or political subdivision applies to the Commission for an exemption from the PPPA's preemption clause and the Commission grants the exemption through a process specified at 16 CFR part 1061. 15 U.S.C. 1476(c)(1). In addition, the federal government, or a state or local government, may establish and continue in effect a nonidentical special packaging requirement that provides a higher degree of protection than the PPPA requirement for a household substance for the federal, state, or local government's own use. 15 U.S.C. 1476(b).

Thus, with the exceptions noted above, the rule regarding CR packaging for household products containing an imidazoline above the regulated level would preempt nonidentical state or local special packaging standards for such imidazoline-containing products.

IX. Regulatory Flexibility Act (Economic Analysis)

When an agency undertakes a rulemaking proceeding, the Regulatory Flexibility Act (RFA) generally requires that agencies review proposed rules for their potential economic impact on small entities, including small businesses. Section 603 of the RFA calls for agencies to prepare, and make available for public comment, an initial regulatory flexibility analysis describing the impact of the proposed rule on small entities and identifying impact-reducing alternatives. 5 U.S.C. 603. Section 605(b) of the RFA, however, states that this requirement does not apply if the head of the agency certifies that the rule, if promulgated, will not have a significant economic impact on a substantial number of small entities and the agency provides an explanation for that conclusion.

Nasal and ophthalmic products are classified within the NAICS 325412 *Pharmaceutical Preparation Manufacturing* industry. According to the U.S. Small Business Administration's Office of Advocacy, a firm classified within NAICS 325412 is considered a small business if the firm has fewer than 750 employees. Based on such classification, out of the approximately 45 firms that manufacture imidazoline-based eye drops and nasal sprays, approximately 20 firms are defined as ''small businesses.'' There may be more manufacturers, in particular, firms that manufacture under generic labels, which were not identified but that may be small businesses.

As noted in the NPR, the Commission's Directorate of Economic Analysis prepared a preliminary assessment of the impact of a rule to require special packaging for products containing imidazolines equivalent to 0.08 milligrams or more in a single package. Based on this assessment, the Commission concluded that the proposed requirement for products containing imidazolines, if finalized, would not have a significant impact on a substantial number of small businesses. The Commission requested additional information on the possible impact on small businesses, but we received no such comments. Moreover, the preliminary analysis demonstrated that the incremental costs of CR packaging for manufacturers are low, estimated at no more than a few cents per unit for imidazoline products, some of which costs manufacturers are likely to be able to pass on to consumers. The Commission concludes that the rule regarding CR packaging for certain imidazoline products would not have a significant economic impact on a substantial number of small entities.

X. References

Please see all citing references in staff's briefing package for the proposed rule, available at: *http://www.cpsc.gov/library/foia/foia12/brief/imidazolines.pdf* and for the final rule, available at *http://www.cpsc.gov/LIBRARY/FOIA/FOIA13/brief/imidazfinal.pdf.*

List of Subjects in 16 CFR Part 1700

Consumer protection, Drugs, Infants and children, Packaging and containers, Poison prevention, Toxic substances.

For the reasons given above, the Commission amends 16 CFR part 1700 to read as follows:

PART 1700—[AMENDED]

■ 1. The authority citation for part 1700 continues to read as follows:

Authority: Pub. L. 91–601, secs. 1–9, 84 Stat. 1670–74, 15 U.S.C. 1471–76. Secs 1700.1 and 1700.14 also issued under Pub. L. 92–573, sec. 30(a), 88 Stat. 1231. 15 U.S.C. 2079(a).

■ 2. Section 1700.14 is amended by adding paragraph (a)(33) to read as follows:

§ 1700.14 Substances requiring special packaging.

(a) * * *

(33) *Imidazolines.* Any over-the-counter or prescription product containing the equivalent of 0.08

milligrams or more of an imidazoline (tetrahydrozoline, naphazoline, oxymetazoline, or xylometazoline) in a single package, must be packaged in accordance with the provisions of § 1700.15(a), (b), and (c).

* * * * *

Dated: November 29, 2012.

Todd A. Stevenson,

Secretary, Consumer Product Safety Commission.

[FR Doc. 2012–29203 Filed 12–7–12; 8:45 am]

BILLING CODE 6355–01–P

SECURITIES AND EXCHANGE COMMISSION

17 CFR Part 240

[Release No. 34–68357; File No. S7–44–10]

RIN 3235–AK87

Extension of Dates for Certain Requirements and Amendment of Form 19b–4

AGENCY: Securities and Exchange Commission.

ACTION: Final rule; extension of dates for certain requirements.

SUMMARY: The Commission is amending its regulations under the Securities Exchange Act of 1934 (''Exchange Act'') to extend the dates for certain requirements therein and amending the General Instructions to Form 19b-4 to clarify the process for submitting advance notices and security-based swap submissions to the Commission. The Commission is extending the dates with respect to the requirements that designated clearing agencies for which the Commission is the supervisory agency file advance notices and clearing agencies file security-based swap submissions with the Commission in an electronic format to dedicated email addresses to December 10, 2013 in order to prevent the scenario that such filings are required to be filed with the Commission through a system that is not yet technologically able to accept them.

DATES: The effective date for this release is December 10, 2012.

FOR FURTHER INFORMATION CONTACT: Kenneth Riitho, Special Counsel, at 551–5592; and Wyatt A. Robinson, Attorney-Adviser, at 551–5649, Division of Trading and Markets, Securities and Exchange Commission, 100 F Street NE., Washington, DC 20549–7010.

SUPPLEMENTARY INFORMATION:

I. Introduction

On June 28, 2012, the Commission adopted amendments to Rule 19b–4 and Form 19b–4 to define and describe when notices of proposed changes to rules, procedures, or operations are required to be filed by designated financial market utilities in accordance with Section 806(e) of Title VIII of the Dodd-Frank Act [1] (''Advance Notices''), to set forth the process for filing such Advance Notices with the Commission, and to specify the process for a clearing agency's submission for review of any security-based swap, or any group, category, type, or class of security-based swaps that the clearing agency plans to accept for clearing (''Security-Based Swap Submissions'').[2] The effective date for the amendments to Rule 19b–4 was August 13, 2012. The effective date for all amendments to Form 19b–4 and 17 CFR 249.819 is December 10, 2012.

Rule 19b–4(n)(1)(i) requires a DCA [3] for which the Commission is the supervisory agency to provide an Advance Notice to the Commission of any proposed change to its rules, procedures, or operations that could materially affect the nature or level of risks presented by such DCA.[4] Except as provided in Rule 19b–4(n)(1)(ii), a DCA for which the Commission is the supervisory agency is required to submit such Advance Notice to the Commission electronically on Form 19b–4. Rule 19b–4(n)(1)(ii) requires a DCA that files an Advance Notice with the Commission prior to December 10, 2012 to file such Advance Notice in an electronic format to a dedicated email address established by the Commission.[5]

Rule 19b–4(o)(2)(i) requires that except as provided in Rule 19b–4(o)(2)(ii), a clearing agency shall submit each Security-Based Swap Submission to the Commission electronically on Form 19b–4.[6] Rule 19b–4(o)(2)(ii) requires a clearing agency that files a Security-Based Swap Submission with the Commission prior to December 10, 2012 to file such Security-Based Swap Submission in electronic format to a dedicated email address established by the Commission.[7]

The amendments to Form 19b–4 contained in the Adopting Release provide that, among other things, after December 10, 2012, Advance Notices and Security-Based Swap Submissions, and amendments, extensions, and withdrawals thereto, shall be filed in an electronic format through the Electronic Form 19b-4 Filing System (''EFFS'').[8]

II. Discussion

A. Rules 19b–4(n)(1)(ii) and 19b–4(o)(2)(ii)

The Commission stated in the Adopting Release that it was in the process of designing and implementing EFFS system upgrades that are necessary for Advance Notices and Security-Based Swap Submissions to be filed through EFFS.[9] The Commission anticipated in the Adopting Release that the EFFS system upgrades would be completed no later than December 10, 2012.[10] Prior to December 10, 2012, DCAs for which the Commission is the supervisory agency are required to file Advance Notices and clearing agencies are required to file Security-Based Swap Submissions through dedicated email addresses established by the Commission.[11]

Though the Commission has made progress on designing and implementing the EFFS system upgrades since the date of the Adopting Release, the Commission has determined that additional time is required to design, test, and implement the EFFS system upgrades. Therefore, the Commission is amending Rule 19b–

[1] Section 806(e) of Title VIII of the Dodd-Frank Act requires any financial market utility designated by the Financial Stability Oversight Council (''Council'') as systemically important to file with its supervisory agency 60 days advance notice of changes to its rules, procedures, or operations that could materially affect the nature or level of risk presented by the financial market utility. 12 U.S.C. 5465(e)(1)(A).

[2] *See* Securities Exchange Act Release No. 67286 (June 28, 2012), 77 FR 41602 (July 13, 2012) (''Adopting Release'').

[3] Six clearing agencies registered with the Commission are DCAs: Chicago Mercantile Exchange Inc. (''CME''), The Depository Trust Company (''DTC''), Fixed Income Clearing Corporation (''FICC''), ICE Clear Credit (''ICC''), National Securities Clearing Corporation (''NSCC''), and The Options Clearing Corporation (''OCC''). However, the Commission is the supervisory agency for only DTC, FICC, NSCC, and OCC.

[4] *See* 17 CFR 240.19b–4(n)(1)(i).

[5] *See* 17 CFR 240.19b–4(n)(1)(ii). Currently, DCAs file Advance Notices with the Commission via the dedicated email address *AdvanceNoticeFilings@sec.gov.*

[6] *See* 17 CFR 240.19b–4(o)(2)(i).

[7] *See* 17 CFR 240.19b–4(o)(2)(ii). The Commission has established the dedicated email address *SBSwapsSubmissions@sec.gov* for Security-Based Swap Submissions.

[8] Adopting Release at 41653, 41654. Currently, EFFS is used by self-regulatory organizations (''SRO''), which include registered clearing agencies, to file proposed rule changes electronically with the Commission pursuant to Exchange Act Section 19(b) and Rule 19b–4.

[9] *See* Adopting Release at 41606, 41620.

[10] *See id.*

[11] *See id.* The Commission has maintained a dedicated email address to receive Advance Notices and a dedicated email address to receive Security-Based Swap Submissions since July 19, 2012. The Commission has received five Advance Notices and zero Security-Based Swap Submissions through November 28, 2012.

4(n)(1)(ii) and Rule 19b–4(o)(2)(ii) to extend the dates with respect to the requirements that a DCA for which the Commission is the supervisory agency file an Advance Notice and a clearing agency file a Security-Based Swap Submission with the Commission in an electronic format to a dedicated email address established by the Commission to December 10, 2013. Extending the date prevents the scenario that DCAs for which the Commission is the supervisory agency are required to file Advance Notices and clearing agencies are required to file Security-Based Swap Submissions with the Commission through a system that is not yet technologically able to accept such filings. The Commission believes that an extension of the date to December 10, 2013, should provide the time necessary to complete implementation of the EFFS system upgrades.

In considering whether to extend the date with respect to the filing of Advance Notices and Security-Based Swap Submissions in an electronic format to a dedicated email address established by the Commission, the Commission's primary objective is to ensure that DCAs for which the Commission is the supervisory agency desiring to submit Advance Notices and clearing agencies desiring to submit Security-Based Swap Submissions to the Commission have a dependable mechanism with which to do so. As noted above, the Commission has maintained dedicated email addresses to receive Advance Notices and Security-Based Swap Submissions since July 19, 2012, and DCAs for which the Commission is the supervisory agency have developed a familiarity with this temporary mechanism to deliver Advance Notices to the Commission. Furthermore, the dedicated email address for submitting Advance Notices has operated according to design at all times during the period for which it has been in effect and the Commission has not received any complaints regarding the dedicated email address from DCAs for which the Commission is the supervisory agency.

B. General Instructions for Form 19b–4

In the Adopting Release, the Commission amended the General Instructions for Form 19b–4 to require, among other things, DCAs for which the Commission is the supervisory agency to submit Advance Notices and clearing agencies to submit Security-Based Swap Submissions to the Commission in an electronic format through EFFS.[12] The effective date of the amendments to Form 19b–4, including the amendments to the General Instructions, is December 10, 2012.

In this release, the Commission is amending the General Instructions for Form 19b–4 to continue the requirement that DCAs for which the Commission is the supervisory agency file Advance Notices and amendments, extensions, or withdrawals thereto, and clearing agencies file Security-Based Swap Submissions, and amendments, extensions, or withdrawals thereto, to the Commission through dedicated email addresses until December 10, 2013. Specifically, the Commission is amending section A, ''Use of the Form,'' and section F, ''Signature and Filing of the Completed Form,'' of the General Instructions for Form 19b–4 to require DCAs for which the Commission is the supervisory agency to file Advance Notices and amendments, extensions, and withdrawals thereto, with the Commission by using the dedicated email address *AdvanceNoticeFilings@sec.gov* and to require clearing agencies to file Security-Based Swap Submissions and amendments, extensions, and withdrawals thereto, with the Commission by using the dedicated email address *SBSwapsSubmissions@sec.gov*. Finally, to facilitate the filing of Form 19b–4 to the dedicated email addresses, the Commission is also amending section A of the General Instructions for Form 19b–4 to state that blank electronic and PDF versions of Form 19b–4 are available on EFFS and *www.sec.gov*.

To the extent that EFFS is available for such Advance Notices and Security-Based Swap Submissions before December 10, 2013, the Commission will issue a notice to inform DCAs for which the Commission is the supervisory agency that they may begin voluntarily to submit Advance Notices and clearing agencies that they may begin voluntarily to submit Security-Based Swap Submissions through EFFS.

The Commission finds, for good cause, that notice and solicitation of comment regarding the extension of the dates and the conforming change to the General Instructions for Form 19b–4 set forth herein are impractical, unnecessary, and contrary to the public interest.[13] Notice and solicitation of comment is unnecessary because the extension of the dates and amendment to the General Instructions for Form 19b–4 simply preserve the status quo[14] until the EFFS system upgrade is completed by continuing the mechanism by which DCAs for which the Commission is the supervisory agency file Advance Notices with the Commission and clearing agencies file Security-Based Swap Submissions with the Commission. Notice and solicitation of comment is impractical and contrary to the public interest because it would temporarily create the scenario that DCAs for which the Commission is the supervisory agency are required to file Advance Notices and clearing agencies are required to file Security-Based Swap Submissions with the Commission through a system that is not yet technologically able to accept such filings.

III. Paperwork Reduction Act

The rule amendments contain ''collection of information'' requirements as defined by the Paperwork Reduction Act of 1995, as amended (''PRA''),[15] but the Commission believes that these rule amendments will not impose any new burdens or costs upon DCAs or clearing agencies.

The rule amendments further modify recent amendments to Rule 19b–4 under the Exchange Act, by amending Rule 19b–4(n)(1)(ii) to extend the date with respect to the requirement that a DCA shall file an Advance Notice with the Commission in electronic format to a dedicated email address established by the Commission to December 10, 2013, and amending Rule 19b–4(o)(2)(ii) to extend the date with respect to the requirement that a clearing agency file Security-Based Swap Submissions with the Commission in an electronic format to a dedicated email address established by the Commission to December 10, 2013.

The Commission therefore does not believe that these amendments would require any new or additional ''collection of information'' as such term

[12] *See* Adopting Release at 41624.

[13] *See* Section 553(b)(3)(B) of the Administrative Procedure Act (5 U.S.C. 553(b)(3)(B)) (stating that an agency may dispense with prior notice and comment when it finds, for good cause, that notice and comment are ''impractical, unnecessary, or contrary to the public interest''). This finding also satisfies the requirements of 5 U.S.C. 808(2), allowing the rules to become effective notwithstanding the requirement of 5 U.S.C. 801 (stating that if a federal agency finds that notice and public comment are ''impractical, unnecessary or contrary to the public interest,'' a rule ''shall take effect at such time as the federal agency promulgating the rule determines''). Also, because the Regulatory Flexibility Act (5 U.S.C. 601–612) only requires agencies to prepare analyses when the Administrative Procedures Act requires general notice of rulemaking, that Act does not apply to the actions that we are taking in this release.

[14] A dedicated email address has been used successfully for these purposes since the effective date of the Adopting Release. *See supra* note 11 and accompanying text.

[15] 44 U.S.C. 3501, *et seq.*

is defined in the PRA and will not impose any new burdens or costs upon DCAs or clearing agencies.

IV. Economic Analysis

The Commission is sensitive to the economic effects of the amendments to Rule 19b–4, including its costs and benefits. Section 23(a) [16] of the Exchange Act requires the Commission, when making rules and regulations under the Exchange Act, to consider the impact a new rule would have on competition. Section 23(a)(2) of the Exchange Act prohibits the Commission from adopting any rule that would impose a burden on competition not necessary or appropriate in furtherance of the purposes of the Exchange Act. Section 3(f) of the Exchange Act [17] requires the Commission, when engaging in rulemaking that requires it to consider whether an action is necessary or appropriate in the public interest, to consider, in addition to the protection of investors, whether the action would promote efficiency, competition, and capital formation.

The amendments to Rule 19b–4(n)(1)(ii) and Rule 19b–4(o)(2)(ii) will affect DCAs for which the Commission is the Supervisory Agency and clearing agencies registered with the Commission that clear security-based swaps. Four clearing agencies are DCAs for which the Commission is the supervisory agency (DTC, FICC, NSCC, and OCC) and three clearing agencies registered with the Commission currently clear security-based swaps (CME, ICC, and ICE Clear Europe).

The extension of the dates and amendment to the General Instructions for Form 19b–4 simply preserve the status quo that has operated without complaint [18] by continuing the method by which DCAs for which the Commission is the supervisory agency file Advance Notices and clearing agencies file Security-Based Swap Submissions with the Commission.[19] Though the Commission stated in the Adopting Release that Advance Notices and Security-Based Swap Submissions, and amendments, extensions, and withdrawals thereto, should be filed in an electronic format through EFFS starting on December 10, 2012, because the EFFS system upgrades that are necessary for Advance Notices and Security-Based Swap Submissions to be filed on EFFS were not complete when the Commission adopted Rule 19b–4(n) and Rule 19b–4(o), the Commission mandated through Rules 19b–4(n)(1)(ii) and 19b–4(o)(2)(ii) that a DCA for which the Commission is the supervisory agency that files an Advance Notice or a clearing agency that files a Security-Based Swap Submission with the Commission prior to December 10, 2012 shall file such Advance Notice or Security-Based Swap Submission in electronic format to a dedicated email address established by the Commission.[20] Because the Commission has determined that additional time is required to design, test, and implement the EFFS system upgrades, an extension of the December 10, 2012 date for the use of dedicated email addresses to file Advance Notices or Security-Based Swap Submissions is necessary and appropriate to prevent the scenario that DCAs for which the Commission is the supervisory agency are required to file Advance Notices and clearing agencies are required to file Security-Based Swap Submissions with the Commission through a system that is not yet technologically able to accept such filings and to ensure the Commission continues to obtain the information necessary to meet its statutory obligations in connection with Advance Notices and Security-Based Swap Submissions.

Theoretically, the cost of foregoing the ability to file Advance Notices and Security-Based Swap Submissions through the EFFS system could be incurred by DCAs for which the Commission is the supervisory agency and clearing agencies as a result of the amendments to the rules extending the dates with respect to the filing of Advance Notices and Security-Based Swap Submissions to dedicated email addresses established by the Commission. However, this theoretical cost is not a real cost of the rule because use of the EFFS system is not an option. Instead, the amendments to the rules extending the dates for filing Advance Notices and Security-Based Swap Submissions to dedicated email addresses established by the Commission avoids the cost of eliminating the ability of DCAs for which the Commission is the supervisory agency to file Advance Notices and clearing agencies to file Security-Based Swap Submissions to the Commission through the only method that is currently technologically available. Furthermore, extending the dates also enables the Commission to continue to obtain the information that is necessary to meet its statutory obligations with respect to the enhanced oversight of systemically important financial market utilities and the mandatory clearing of security-based swaps.

The Commission believes that the rule amendments will not lead to any material increase in the costs associated with filing Advance Notices and Security-Based Swap Submissions. The Commission stated in the Adopting Release that it believed that the requirements to file Advance Notices and Security-Based Swap Submissions by email, as well as the temporary nature of such requirements, would impose relatively little additional burden on DCAs for which the Commission is the supervisory agency or clearing agencies, both of which can use their existing email systems to make such filings.[21] The Commission further believes that any additional negligible costs are justified because additional time is required to design, test, and implement the EFFS system upgrades that will facilitate the filing of Advance Notices and Security-Based Swap Submissions with the Commission in accordance with Rule 19b–4(n) and Rule 19b–4(o). As stated above, the Commission's primary objective is to ensure that clearing agencies desiring to submit Advance Notices or Security-Based Swap Submissions to the Commission have a dependable mechanism with which to do so.

Because these rules merely extend the date for the process by which DCAs for which the Commission is the supervisory agency file Advance Notices and clearing agencies file Security-Based Swap Submissions, the Commission believes that the rules being adopted today will have a negligible, if any, impact on efficiency, competition, and capital formation. To the extent that the rule amendments impose a new burden upon market participants, such burden will result from the requirement that DCAs for which the Commission is the supervisory agency filing Advance Notices and clearing agencies filing Security-Based Swap Submissions with the Commission submit Form 19b–4 to a dedicated email address as opposed to submitting it through EFFS. Regardless of whether Form 19b–4 is submitted through EFFS or a dedicated email address, DCAs for which the Commission is the supervisory agency

[16] 15 U.S.C. 78w(a).

[17] 15 U.S.C. 78c(f).

[18] *See* supra note 11 and accompanying text.

[19] The Commission does not believe that there are any viable and more cost-efficient alternatives to extending the date of the use of the dedicated email addresses for the submission of Advance Notices and Security-Based Swap Submissions given the fact that the EFFS system upgrades that are necessary for Advance Notices and Security-Based Swap Submissions to be filed on EFFS will not be complete by December 10, 2012.

[20] *See* 17 CFR 240.19b–4(n)(1)(ii) and 17 CFR 240.19b–4(o)(2)(ii).

[21] *See* Adopting Release at 41642, 41645.

and clearing agencies will still be required to adequately and accurately complete such form. Furthermore, the Commission believes that the interest of gaining additional time to effectively develop, test, and implement the EFFS system upgrades necessary for filing Advance Notices and Security-Based Swaps Submissions in a manner that would be consistent with the requirements and goals of Rule 19b–4(n)(1)(i) and Rule 19b–4(o)(2)(i) justifies the risk of possibly imposing a negligible burden on DCAs for which the Commission is the supervisory agency and clearing agencies.

V. Statutory Authority

Pursuant to the Exchange Act, and particularly Sections 3C, 17A, and 19(b) thereof, 15 U.S.C. 78c–3, 78q–1, and 78s(b), and Section 806(e) of the Clearing Supervision Act, 12 U.S.C. 5465(e), the Commission is amending Rule 19b–4 and Form 19b–4 as set forth below.

List of Subjects in 17 CFR Part 240

Brokers, Reporting and recordkeeping requirements, Securities.

Text of the Final Rule

In accordance with the foregoing, Title 17, chapter II of the Code of Federal Regulations is amended as follows:

PART 240—GENERAL RULES AND REGULATIONS, SECURITIES EXCHANGE ACT OF 1934

■ 1. The general authority citation for part 240 is revised to read as follows:

Authority: 15 U.S.C. 77c, 77d, 77g, 77j, 77s, 77z–2, 77z–3, 77eee, 77ggg, 77nnn, 77sss, 77ttt, 78c, 78c–3, 78d, 78e, 78f, 78g, 78i, 78j, 78j–1, 78k, 78k–1, 78*l,* 78m, 78n, 78*o,* 78*o*–4, 78p, 78q, 78s, 78u–5, 78w, 78x, 78*ll,* 78mm, 80a–20, 80a–23, 80a–29, 80a–37, 80b–3, 80b–4, 80b–11, and 7201 *et seq.;* 18 U.S.C. 1350, 12 U.S.C. 5221(e)(3), and Pub. L. 111–203, section 939A, 124 Stat. 1376, (2010), unless otherwise noted.

* * * * *

■ 2. Section 240.19b–4 is amended by:

■ a. In paragraph (n)(1)(ii), removing the phrase ''December 10, 2012'' and adding in its place ''December 10, 2013'';

■ b. In paragraph (o)(2)(ii), removing the phrase ''December 10, 2012'' and adding in its place ''December 10, 2013''.

PART 249—FORMS, SECURITIES EXCHANGE ACT OF 1934

■ 3. The general authority citation for part 249 is revised to read as follows:

Authority: 15 U.S.C. 78a *et seq.* and 7201 *et seq.;* 12 U.S.C. 5461 *et seq.;* and 18 U.S.C. 1350, unless otherwise noted.

* * * * *

■ 4. Form 19b–4 (referenced in § 249.819) is amended by revising General Instructions for Form 19b–4 Sections A and F to read as follows: [22]

Note: The text of Form 19b–4 does not and the amendments will not appear in the Code of Federal Regulations.

General Instructions for Form 19b–4

A. Use of the Form

This form shall be used for all self-regulatory organization filings of proposed rule changes pursuant to Section 19(b)(1) of the Securities Exchange Act of 1934 (''Act'') (except filings with respect to proposed rule changes by self-regulatory organizations submitted pursuant to Section 19(b)(7) of the Act), security-based swap submissions, and advance notices. National securities exchanges, registered securities associations, registered clearing agencies, and the Municipal Securities Rulemaking Board are self-regulatory organizations for purposes of this form. All proposed rule changes (except filings with respect to proposed rule changes by self-regulatory organizations submitted pursuant to Section 19(b)(7) of the Act) shall be filed in an electronic format through the Electronic Form 19b–4 Filing System (''EFFS''), a secure Web site operated by the Commission. All security-based swap submissions and advance notices shall be filed by submitting Form 19b–4 to a dedicated email address, *SBSwapsSubmissions@sec.gov* for security-based swap submissions and *AdvanceNoticeFilings@sec.gov* for advance notices. An electronic version of Form 19b–4 is available in EFFS. A PDF version of the Form is also available on *www.sec.gov*.

* * * * *

F. Signature and Filing of the Completed Form

All proposed rule changes, amendments, extensions, and withdrawals of proposed rule changes shall be filed through the EFFS. All security-based swap submissions, advance notices, and amendments, extensions, and withdrawals of security-based swap submissions and advance notices shall be filed to a dedicated email address established by the Commission, *SBSwapsSubmissions@sec.gov* for security-based swap submissions and *AdvanceNoticeFilings@sec.gov* for advance notices. In order to file Form 19b–4 through EFFS, self-regulatory organizations must request access to the SEC's External Application Server by completing a request for an external account user ID and password. Initial requests will be received by contacting the Trading and Markets Administrator located on our Web site (*http://www.sec.gov*). An email will be sent to the requestor that will provide a link to a secure Web site where basic profile information will be requested.

A duly authorized officer of the self-regulatory organization shall electronically sign the completed Form 19b–4 as indicated on Page 1 of the Form. In addition, a duly authorized officer of the self-regulatory organization shall manually sign one copy of the completed Form 19b–4, and the manually signed signature page shall be maintained pursuant to Section 17 of the Act. A registered clearing agency for which the Commission is not the appropriate regulatory agency also shall file with its appropriate regulatory agency three copies of the form, one of which shall be manually signed, including exhibits. A clearing agency that also is a designated clearing agency shall file with the Board of Governors of the Federal Reserve System (''Federal Reserve'') three copies of any form containing an advance notice, one of which shall be manually signed, including exhibits; provided, however, that this requirement may be satisfied instead by providing the copies to the Federal Reserve in an electronic format as permitted by the Federal Reserve. The Municipal Securities Rulemaking Board also shall file copies of the form, including exhibits, with the Federal Reserve, the Comptroller of the Currency, and the Federal Deposit Insurance Corporation.

* * * * *

Dated: December 5, 2012.

By the Commission.

Kevin M. O'Neill,

Deputy Secretary.

[FR Doc. 2012–29712 Filed 12–7–12; 8:45 am]

BILLING CODE 8011–01–P

[22] Because Section 19(b)(7)(C) of the Act states that filings abrogated pursuant to this Section should be re-filed pursuant to paragraph (b)(1) of Section 19 of the Act, SROs are required to file electronically such proposed rule changes in accordance with this form.

DEPARTMENT OF HOMELAND SECURITY

U.S. Customs and Border Protection

19 CFR Parts 4, 24, 101, 102, 127, 159, 161 and 177

[CBP Dec. 12–21]

Technical Corrections to U.S. Customs and Border Protection Regulations

AGENCY: U.S. Customs and Border Protection, Department of Homeland Security.

ACTION: Final rule.

SUMMARY: U.S. Customs and Border Protection (CBP) periodically reviews its regulations to ensure that they are current, correct, and consistent. Through this review process, CBP has discovered a number of discrepancies. This document amends various sections of title 19 of the Code of Federal Regulations (19 CFR) to correct those discrepancies.

DATES: The final rule is effective December 10, 2012.

FOR FURTHER INFORMATION CONTACT: Maria Lloyd, Trade and Commercial Regulations Branch, Regulations and Rulings, Office of International Trade, (202) 325–0369.

SUPPLEMENTARY INFORMATION:

Background

It is the policy of U.S. Customs and Border Protection (CBP) to periodically review title 19 of the Code of Federal Regulations (19 CFR) to ensure that it is accurate and up-to-date so that the importing and general public are aware of CBP requirements and procedures regarding import-related activities. As part of this review policy, CBP has determined that certain corrections are necessary affecting parts 4, 24, 101, 102, 127, 159, 161 and 177 of the CBP regulations (19 CFR parts 4, 24, 101, 102, 127, 159, 161 and 177).

Discussion of Changes

Part 4

Section 4.7 of the CBP regulations (19 CFR 4.7) sets forth requirements regarding vessel manifests. Section 4.21 of the CBP regulations (19 CFR 4.21) concerns exemptions from tonnage taxes. Section 4.83 of the CBP regulations (19 CFR 4.83) governs trade between United States ports on the Great Lakes and other ports of the United States. Sections 4.7, 4.21 and 4.83 each contain references to a Great Lakes license endorsement. The statutory provision providing for a Great Lakes endorsement, formerly found in 46 U.S.C. 12107, was repealed by § 1115(a) of the Coast Guard Authorization Act of 1996, Public Law 104–324 (October 19, 1996). Accordingly, this document makes conforming amendments to 19 CFR Part 4 by removing references to the Great Lakes endorsement in § 4.7; by removing paragraphs (b)(11) and (b)(12) of § 4.21, which pertain to vessels with Great Lakes endorsements, and by removing paragraph (b) of § 4.83, which also pertains to vessels with Great Lakes endorsements. In addition, paragraph (a) of § 4.7 contains a typographical error. As such, paragraph (a) in § 4.7 is amended by replacing the word ''Statment'' with the word ''Statement''. Section 4.85 of the CBP regulations (19 CFR 4.85) concerns vessels with residue cargo for domestic ports. Section 4.85 contains a reference to a Great Lakes license endorsement, which was formally repealed, as discussed above. Accordingly, this document makes conforming amendments to paragraph (a) in § 4.85.

Sections 4.80 and 4.80a of the CBP regulations (19 CFR 4.80 and 4.80a) concern coastwise transportation of passengers or merchandise. Each section contains certain outdated statutory references. Public Law 109–304, titled ''To complete the codification of title 46, United States Code, ''Shipping'', as positive law'' enacted on October 6, 2006, recodified, reorganized and amended title 46, United States Code, including its Appendix. The Jones Act, formerly 46 U.S.C. App. 883, is recodified as 46 U.S.C. 55102. The Passenger Vessel Services Act, formerly 46 U.S.C. App. 289, is now recodified as 46 U.S.C. 55103. Former 46 U.S.C. App. 289c is recodified and now found at 46 U.S.C. 55104. Former 46 U.S.C. 12106(d) is recodified and now found at 46 U.S.C. 12117. Accordingly, this document makes the necessary technical amendments to paragraphs (b), (f) and (h) of § 4.80 and paragraphs (b), (c) and (d) of § 4.80a to conform to the above-referenced statutory changes.

Part 24

Section 24.5 of the CBP regulations (19 CFR 24.5) contains the legacy agency name and an outdated office name and address for CBP's National Finance Center. Accordingly, § 24.5(f) is amended to remove the outdated information and replace it with the current agency name, office name, and address of the National Finance Center.

Section 24.24 of the CBP regulations (19 CFR 24.24) sets forth CBP's financial and accounting procedures. This section makes reference to the ''Office of Finance.'' On November 23, 2009, CBP reorganized the ''Office of Finance'' as the ''Office of Administration'' and changed its name to better communicate, internally and externally, the scope of the office's responsibilities. The Office of Administration oversees all aspects of financial management and accountability for CBP including: accounting and budget; financial systems; procurement and acquisition; facilities and engineering; asset management and investment management, and oversight of all financial operations within CBP. As appropriate, the term ''Office of Finance'' is removed wherever it appears and is replaced with the term ''Office of Administration''. Accordingly, this document makes non-substantive amendments to §§ 24.24(c)(8)(i), 24.24(e)(1)(ii), 24.24(e)(2)(iii), 24.24(e)(3)(ii), 24.24 (e)(4)(iii) and 24.24(e)(4)(iv)(A) to reflect the correct nomenclature and to § 24.24(e)(4)(iv)(B)(5), to reflect the nomenclature change of ''Customs'' to ''CBP.''

Section 24.26 of the CBP regulations (19 CFR 24.26) contains in various paragraphs an outdated office name, that is, the Financial Management Service Center, and an outdated address for CBP's National Finance Center to where certain applications to participate in a program are to be mailed. Accordingly, paragraphs (b), (c), (d) and (g) of § 24.26 are amended to replace the outdated office name and address with the current office name, Revenue Division, and address of the National Finance Center. Section 24.26 is further amended by replacing the word ''Customs'' with the term ''CBP'' in paragraphs (a), (c), (d), (e)(1), and (f).

Part 101

Section 101.9 of the CBP regulations (19 CFR 101.9) sets forth the test programs or procedures for evaluating the effectiveness of new technologies or operational procedures. Section 101.9 contains a typographical error in the citation of section 411(a)(2) of the Tariff Act of 1930. Section 101.9 is amended by correcting the citation to read ''(19 U.S.C. 1411(a)(2)),'' in paragraph (b). Section 101.9 is further amended by replacing the words ''Commissioner of Customs'' with the words ''Commissioner of CBP''; by replacing the reference to ''Customs Regulations'' with a reference to ''CBP regulations''; and by replacing the word ''shall'' with the word ''will''.

Part 102

Section 102.20 of the CBP regulations (19 CFR 102.20) sets forth the specific rules of origin by tariff classification. In

paragraph (f) of § 102.20, titled ''Section VI: Chapters 28 through 38'', the entry for 2933.11—2934.99 contains duplicative tariff numbers that should appear only in the column headed, ''HTSUS.'' As such, section 102.20(f) is amended by removing the tariff numbers ''2933.11—2934.99:'' that are set forth before the sentence that begins with the words, ''A change to'' in the column headed, ''tariff shift and/or other requirements''.

Paragraph (q) of § 102.20, titled ''Section XVIII: Chapters 90 through 92'' contains a typographical error in the entry for subheading 9001.10, HTSUS, that provides for the tariff shift rule which encompasses optical fibers and optical fiber bundles and cables. As such, section 102.20(q) is amended by removing the typographical error of the word ''performs'' and replacing it with the word ''preforms'' in the entry for subheading 9001.90, HTSUS.

Parts 127

Section 127.43 of the CBP regulations (19 CFR 127.43) sets forth regulations regarding establishing title to unclaimed and abandoned merchandise which has vested in the government. This section makes a reference to the outdated ''Office of Finance.'' Accordingly, this document amends § 127.43(e) to reflect the correct nomenclature.

Part 159

Sections 159.41 and 159.47 of the CBP regulations (19 CFR 159.41 and 159.47) concern the special duties of antidumping and countervailing, respectively. These sections contain an outdated reference to the Department of Commerce's International Trade Administration (ITA) regulations. ITA promulgated a single new part 351 and removed parts 353 and 355 from 19 CFR chapter III by a final rule published in the **Federal Register** (62 FR 27296, May 19, 1997). Accordingly, §§ 159.41 and 159.47 are amended to conform the CBP regulations with the ITA regulations by removing the outdated reference to part 353 and replacing it with part 351.

Section 159.63 of the CBP regulations (19 CFR 159.63) pertains to CBP receiving a certification from certain domestic producers to make a distribution of an offset under the antidumping and countervailing laws. This section makes references to the outdated ''Office of Finance.'' Accordingly, this document amends § 159.63(a) to reflect the correct nomenclature.

Part 161

Section 161.16 of the CBP regulations (19 CFR 161.16) pertains to filing a claim for informant compensation. This section contains an outdated reference to a Customs form that was abolished and replaced by a DHS form and an outdated reference to an investigative position. Accordingly, § 161.16(b) is amended by replacing the reference to ''Customs Form 4623'' with the reference to ''DHS Form 4623''; by replacing the outdated position in the former Customs Service of ''Special Agent in Charge'' with the current position of ''Special Agent in Charge, U.S. Immigration and Customs Enforcement, Homeland Security Investigations''; and by replacing ''Customs Headquarters'' with the reference to ''CBP Headquarters''. Also, the word ''shall'' is replaced with either ''must'' or ''will'', as appropriate, in paragraphs (a) and (b) of § 161.16 to conform with the plain English mandate.

Part 177

Section 177.13 of the CBP regulations (19 CFR 177.13) pertains to inconsistent customs decisions. This section contains an incorrect statutory citation. Accordingly, the first sentence in paragraph (a)(2)(i) of § 177.13 is amended by removing the incorrect reference to ''(19 U.S.C. 1514(c) (1))'' and replacing it with the reference to ''(19 U.S.C. 1514(c)(2))''. Also, section 177.13 is amended by making non-substantive editorial and nomenclature amendments. As appropriate, the word ''Customs'' is replaced with the term ''CBP'' in the context of either a CBP official(s), CBP offices or CBP Headquarters in the title of the section, paragraph (a), the first sentence of paragraph (b)(2), and paragraph (d) of § 177.13. The words ''Customs Service'' are replaced with the term ''CBP'' in paragraphs (b)(2), (d), and (f) of § 177.13. Additionally, the word ''shall'' is replaced with the word ''will'' in paragraphs (a)(2), (c), and (f) of § 177.13. Finally, paragraph (b)(1) of § 177.13 is amended, by replacing the word ''shall'' with the word ''must''.

Inapplicability of Notice and Delayed Effective Date

Because the technical corrections set forth in this document merely conform to existing law and regulation, CBP finds that good cause exists for dispensing with notice and public procedure as unnecessary under 5 U.S.C. 553(b)(B). For this same reason, pursuant to 5 U.S.C. 553(d)(3), CBP finds that good cause exists for dispensing with the requirement for a delayed effective date.

Regulatory Flexibility Act

Because this document is not subject to the notice and public procedure requirements of 5 U.S.C. 553, it is not subject to the provisions of the Regulatory Flexibility Act (5 U.S.C. 601 *et seq.*).

Executive Order 12866

These amendments do not meet the criteria for a ''significant regulatory action'' as specified in Executive Order 12866, as supplemented by Executive Order 13563.

Signing Authority

This document is limited to technical corrections of the CBP regulations. Accordingly, it is being signed under the authority of 19 CFR 0.1(b)(1).

List of Subjects

19 CFR Part 4

Customs duties and inspection, Exports, Freight, Harbors, Maritime carriers, Reporting and recordkeeping requirements, Vessels.

19 CFR Part 24

Accounting, Customs duties and inspection, Fees, Financial and accounting procedures, Imports, Interest, Reporting and recordkeeping requirements, User fees.

19 CFR Part 101

Administrative practice and procedure, Customs duties and inspection, Organizations and functions (government agencies), Tests.

19 CFR Part 102

Customs duties and inspection, Imports, Reporting and recordkeeping requirements, Rules of origin, Trade Agreements.

19 CFR Part 127

Customs duties and inspection, Exports, Freight, Reporting and recordkeeping requirements.

19 CFR Part 159

Antidumping (liquidation of duties), Countervailing duties (liquidation of duties), Customs duties and inspection, Liquidations of entries for merchandise.

19 CFR Part 161

Customs duties and inspection, Imports, Law Enforcement.

19 CFR Part 177

Administrative practice and procedure, Customs duties and inspection, Reporting and recordkeeping requirements, Rulings.

Amendments to the CBP Regulations

For the reasons set forth above, parts 4, 24, 101, 102, 127, 159, 161 and 177 of the CBP regulations (19 CFR parts 4, 24, 101, 102, 127, 159, 161 and 177) are amended as set forth below.

PART 4—VESSELS IN FOREIGN AND DOMESTIC TRADES

■ 1. The general authority citation for part 4 continues, and the specific authority citations for §§ 4.7, 4.21, 4.80 and 4.83 are revised to read as follows:

Authority: 5. U.S.C. 301; 19 U.S.C. 66, 1431, 1433, 1434, 1624, 2071 note; 46 U.S.C. 501, 60105.

* * * * *

Section 4.7 also issued under 19 U.S.C. 1581(a);

* * * * *

Section 4.21 also issued under 19 U.S.C. 1441; 46 U.S.C. 60301–60310, 60312;

* * * * *

Sections 4.80, 4.80a, and 4.80b also issued under 19 U.S.C. 1706a; 28 U.S.C. 2461 note; 46 U.S.C. 12112, 12117, 12118, 50501–55106, 55107, 55108, 55110, 55114, 55115, 55116, 55117, 55119, 56101, 55121, 56101, 57109; Pub. L. 108–7, Division B, Title II,§ 211;

* * * * *

Section 4.83 also issued under 46 U.S.C. 60105, 60308;

* * * * *

§ 4.7 [Amended]

■ 2. In § 4.7:

■ a. Paragraph (a) is amended by removing the word ''Statment'' and adding in its place the word ''Statement''.

■ b. Paragraph (d)(1)(i) is amended by removing the words '', or Great Lakes license endorsement''; and by removing the phrase '', to be employed in the foreign, coastwise, or Great Lakes trade, or'' and adding in its place the phrase ''to be employed in the foreign or coastwise trade, or''.

§ 4.21 [Amended]

■ 3. In § 4.21:

■ a. Paragraphs (b)(11) and (b)(12) are removed; and

■ b. Existing paragraphs (b)(13) through (b)(17) are redesignated as paragraphs (b)(11) through (b)(15).

§ 4.80 [Amended]

■ 4. In § 4.80:

■ a. Paragraph (b)(1) is amended by removing the citation ''(46 U.S.C. 883)'' and adding in its place the citation ''(46 U.S.C. 55102)'';

■ b. Paragraph (b)(2) is amended by removing the parenthetical phrase ''(46 U.S.C. App. 289, as adjusted by the Federal Civil Penalties Inflation Adjustment Act of 1990)'' and adding in its place the parenthetical phrase ''(46 U.S.C. 55103, as adjusted by the Federal Civil Penalties Inflation Act of 1990)'';

■ c. Paragraph (f) is amended, in the third sentence, by removing the parenthetical phrase ''(section 9 of the Act of Sept. 7, 1916, as amended, 46 U.S.C. 808).'' and adding in its place the parenthetical phrase ''(section 9 of the Act of Sept. 7, 1916, as amended, 46 U.S.C. 56101 and 57109).'';

■ d. Paragraph (h) is amended:

■ (i) at the end of the first sentence, by removing the parenthetical phrase ''(46 U.S.C. 12106(d)).'' and adding in its place the parenthetical phrase ''(46 U.S.C. 12117).'';

■ (ii) at the beginning of the second sentence, by removing the words ''Notwithstanding 46 U.S.C. App. 883,'' and adding in its place the words ''Notwithstanding 46 U.S.C. 55102,''; and

■ (iii) by revising the last sentence of paragraph (h).

The revision reads as follows:

§ 4.80 Vessels entitled to engage in coastwise trade.

* * * * *

(h) * * * Such vessel may also engage in any other employment for which a registry or fishing endorsement is not required, and may qualify to operate for other purposes by meeting the applicable requirements of 46 CFR part 67.

* * * * *

§ 4.80a [Amended]

■ 5. In § 4.80a:

■ a. Paragraph (b) is amended, in the first sentence, by removing the citation ''(46 U.S.C. 289)'' and adding in its place the citation ''(46 U.S.C. 55103)'';

■ b. Paragraph (c) is amended by removing the language ''a finding under 46 U.S.C. 289c'' and adding in its place ''a finding under 46 U.S.C. 55104''; and

■ c. Paragraph (d) is amended by removing the language ''in violation of 46 U.S.C. 289'' and adding in its place ''in violation of 46 U.S.C. 55103''.

§ 4.83 [Amended]

■ 6. In § 4.83:

■ a. Paragraph (a) is amended by removing the designation (a); and

■ b. Paragraph (b) is removed.

§ 4.85 [Amended]

■ 7. Paragraph (a) in § 4.85 is amended by removing the phrase ''or, where appropriate, a Great Lakes license endorsement,'' and adding in its place the word ''endorsement,''.

PART 24—CUSTOMS FINANCIAL AND ACCOUNTING PROCEDURE

■ 8. The general authority citation for part 24 continues to read as follows:

Authority: 5 U.S.C. 301; 19 U.S.C. 58a–58c, 66, 1202 (General Note 3(i), Harmonized Tariff Schedule of the United States), 1505, 1520, 1624; 26 U.S.C. 4461, 4462; 31 U.S.C. 3717, 9701; Public Law 107–296, 116 Stat. 2135 (6 U.S.C. 1 *et. seq.*).

* * * * *

§ 24.5 [Amended]

■ 9. Paragraph (f) in § 24.5 is amended, in the last sentence, by removing the words ''U.S. Customs Service, Accounting Services—Accounts Receivable, 6026 Lakeside Boulevard, Indianapolis, Indiana 46278,'' and adding in their place the words ''the National Finance Center, U.S. Customs and Border Protection, Office of Administration, Revenue Division, 6650 Telecom Drive, Suite 100, Indianapolis, IN 46278,''.

§ 24.24 [Amended]

■ 10. In § 24.24:

■ a. Paragraph (c)(8)(i) is amended by removing the words ''Office of Finance'' and adding in their place the words ''Office of Administration'';

■ b. Paragraph (e)(1)(ii) is amended by removing the words ''Office of Finance'' and adding in their place the words ''Office of Administration'';

■ c. Paragraph (e)(2)(iii) is amended by removing the words ''Office of Finance'' and adding in their place the words ''Office of Administration'';

■ d. Paragraph (e)(3)(ii) is amended by removing the words ''Office of Finance'' and adding in their place the words ''Office of Administration'';

■ e. Paragraph (e)(4)(iii) is amended by removing the words ''Office of Finance'' and adding in their place the words ''Office of Administration'';

■ f. Paragraph (e)(4)(iv)(A) is amended by removing the words ''Office of Finance'' and adding in their place the words ''Office of Administration''; and

■ g. Paragraph (e)(4)(iv)(B)(*5*) is amended by removing the words ''notify Customs'' and adding in their place the words ''notify CBP''.

§ 24.26 [Amended]

■ 11. In § 24.26:

■ a. Paragraph (b) is amended:

■ (i) by removing the words ''the Financial Management Services Center, U.S. Customs Service, 6026 Lakeside Boulevard, Indianapolis, Indiana 46278:'' and adding in their place the words ''the National Finance Center, U.S. Customs and Border Protection, Office of Administration, Revenue

Division, 6650 Telecom Drive, Suite 100, Indianapolis, IN 46278:''; and

■ (ii) by removing the words ''Customs assigned number)'' and adding in their place the words ''CBP assigned number)'';

■ b. Paragraphs (c), (d), and (g) are amended by removing the words ''the Financial Management Services Center'' each place these words appear and adding in their place the words ''the National Finance Center''; and

■ c. Paragraphs (a), (c), (d), (e)(1), and (f) are amended by removing the word ''Customs'' each place it appears and adding in its place the term ''CBP''.

PART 101—GENERAL PROVISIONS

■ 12. The general and specific authority citations for part 101 continue to read as follows:

Authority: 5 U.S.C. 301; 19 U.S.C. 2, 66, 1202 (General Note 3(i), Harmonized Tariff Schedule of the United States), 1623, 1624, 1646a.

* * * * *

Section 101.9 also issued under 19 U.S.C. 1411–1414.

§ 101.9 [Amended]

■ 13. In § 101.9:

■ a. Paragraph (a) is amended:

■ (i) In the first sentence, by removing the words ''Commissioner of Customs'' and adding in its place the words ''Commissioner of CBP'' and by removing the words ''Customs Regulations'' and adding it its place the words ''CBP regulations''; and

■ (ii) in the second sentence, by removing the word ''shall'' and adding in its place the word ''will'';

■ b. Paragraph (a)(2) is amended by removing the word ''shall'' wherever it appears and adding in each place the word ''will'';

■ c. Paragraph (b) is amended:

■ (i) In the first sentence, by removing the phrase ''as described in section 411(a)(2) of the Tariff Act of 1930 (19 U.S.C. 411),'' and adding in its place the phrase ''as described in section 411(a)(2) of the Tariff Act of 1930, as amended (19 U.S.C. 1411),''; by removing the words ''the Commissioner of Customs'' and adding in their place the words ''the Commissioner of CBP''; and by removing the words ''Customs Regulations'' and adding in their place the words ''CBP regulations''; and

■ (ii) in the second sentence, by removing the word ''shall'' and adding in its place the word ''will'';

■ d. Paragraph (b)(1) is amended by removing the word ''shall'' wherever it appears and adding in each place the word ''will''; and

■ e. Paragraph (b)(2) is amended by removing the word ''shall'' and adding in its place the word ''will''.

PART 102—RULES OF ORIGIN

■ 14. The general authority citation for part 102 continues to read as follows:

Authority: 19 U.S.C. 66, 1202 (General Note 3(i), Harmonized Tariff Schedule of the United States), 1624, 3314, 3592.

§ 102.20 [Amended]

■ 15. In the table in § 102.20,

a. In paragraph (f), titled ''Section VI: Chapters 28 through 38'', the entry for 2933.11–2934.99 is amended by removing the tariff numbers ''2933.11–2934.99:'' that are set forth before the sentence that begins with the words, ''A change to'' in the column headed, ''Tariff shift and/or other requirements''; and

b. In paragraph (q), titled ''Section XVIII: Chapters 90 through 92,'' the entry for 9001.10 is amended by removing the phrase ''or glass performs of heading 7002'' in the column headed, ''Tariff shift and/or other requirements'' and adding in its place the phrase ''or glass preforms of heading 7002''.

PART 127—GENERAL ORDER, UNCLAIMED, AND ABANDONED MERCHANDISE

■ 16. The general authority citation for part 127 continues to read as follows:

Authority: 19 U.S.C. 66, 1311, 1312, 1484, 1485, 1490, 1491, 1492, 1493, 1506, 1559, 1563, 1623, 1624, 1646a; 26 U.S.C. 5753.

* * * * *

§ 127.43 [Amended]

■ 17. Section 127.43(e) is amended by removing the words ''Office of Finance'' wherever they appear and adding in each place the words ''Office of Administration''.

PART 159—LIQUIDATION OF DUTIES

■ 18. The general authority citations for part 159 and subpart F are revised, and a specific authority citation for subpart D is added, to read as follows:

Authority: 19 U.S.C. 66, 1500, 1504, 1624.

* * * * *

Subpart D also issued under 19 U.S.C. 1671 *et seq.*

Subpart F also issued under 19 U.S.C. 1675c.

* * * * *

§ 159.41 [Amended]

■ 19. Section 159.41 is amended:

■ (i) by removing the number ''353'' and adding in its place the number ''351''; and

■ (ii) by removing the word ''shall'' and adding in its place the word ''will''.

§ 159.47 [Amended]

■ 20. Section 159.47 is amended:

■ (i) by removing the number ''353'' and adding in its place the number ''351''; and

■ (ii) by removing the word ''shall'' and adding in its place the word ''will''.

§ 159.63 [Amended]

■ 21. Section 159.63(a) is amended by removing the words ''Office of Finance'' and adding in their place the words ''Office of Administration''.

PART 161—GENERAL ENFORCEMENT PROVISIONS

■ 22. The general authority citation for part 161 continues to read as follows:

Authority: 5 U.S.C. 301; 19 U.S.C. 66, 1600, 1619, 1624.

* * * * *

§ 161.16 [Amended]

■ 23. In § 161.16:

■ a. Paragraph (a) is amended by removing the word ''shall'' and adding in its place the word ''must'';

■ b. Paragraph (b) is amended, by removing the words ''Customs Form 4623'' and adding in it place the words ''DHS Form 4623''; by removing the words ''Special Agent in Charge'' wherever they appear and adding in their place the words ''Special Agent in Charge, U.S. Immigration and Customs Enforcement, Homeland Security Investigations''; and by removing the words ''Customs Headquarters'' wherever they appear and adding in their place the words ''CBP Headquarters''; and

■ c. Paragraph (b) is further amended:

■ (i) in the first sentence, by removing the first occurrence of the word ''shall'' and adding in its place the word ''must''; and by removing the second occurrence of the word ''shall'' and adding, in its place, the word ''will''; and

■ (ii) in the second sentence, by removing the word ''shall'' wherever it appears and adding in each place the word ''will''.

PART 177—ADMINISTRATIVE RULINGS

■ 24. The general authority citation for part 177 continues to read as follows:

Authority: 5 U.S.C. 301; 19 U.S.C. 66, 1202 (General Note 3(i), Harmonized Tariff Schedule of the United States), 1502, 1624, 1625.

§ 177.13 [Amended]

■ 25. In § 177.13:

■ a. The section heading is revised to read as set forth below;
■ b. Paragraph (a) introductory text is amended by removing the word ''Customs'' each place it appears and adding in its place the term ''CBP'';
■ c. Paragraph (a)(2) introductory text is amended by removing the word ''shall'' and adding in its place the word ''will'';
■ d. Paragraph (a)(2)(i) is amended, in the first sentence, by removing the reference ''(19 U.S.C. 1514(c)(1))'' and adding in its place the reference ''(19 U.S.C. 1514(c)(2))'';
■ e. Paragraph (b)(1) is amended by removing the word ''shall'' and adding in its place the word ''must'';
■ f. Paragraph (b)(2) is amended, in the first sentence, by removing the term ''Customs'' and adding in its place the word ''CBP''; and by removing the words, ''Customs Service'' wherever it appears and adding in its place the term ''CBP'';
■ g. Paragraphs (c) and (f) are amended by removing the word ''shall'' and adding in its place the word ''will'';
■ h. Paragraph (d) is amended:
■ (i) in the first and second sentences, by removing the term ''the Customs Service'' and adding in its place the term ''CBP''; and
■ (ii) in the third sentence by removing the words, ''Customs offices)'' and adding in their place the words ''CBP offices)''; and
■ i. Paragraph (f) is amended, by removing the word ''shall'' and adding in its place the word ''will'' and by removing the term ''Customs Service'' and adding in its place the term ''CBP''.

The revision reads as follows:

§ 177.13 Inconsistent CBP decisions.

* * * * *

Dated: November 26, 2012.

David V. Aguilar,

Deputy Commissioner, U.S. Customs and Border Protection.

[FR Doc. 2012–29632 Filed 12–7–12; 8:45 am]

BILLING CODE 9111–14–P

DEPARTMENT OF HOMELAND SECURITY

U.S. Customs and Border Protection

19 CFR Part 122

[CBP Dec. 12–20]

Technical Amendment to List of User Fee Airports: Addition of Bozeman Yellowstone International Airport, Belgrade, MT

AGENCY: U.S. Customs and Border Protection, Department of Homeland Security.

ACTION: Final rule; technical amendment.

SUMMARY: This document amends the U.S. Customs and Border Protection (CBP) regulations by revising the list of user fee airports to reflect the recent user fee airport designation for Bozeman Yellowstone International Airport in Belgrade, Montana. User fee airports are those airports which, while not qualifying for designation as international or landing rights airports, have been approved by the Commissioner of CBP to receive, for a fee, the services of CBP officers for the processing of aircraft entering the United States, and the passengers and cargo of those aircraft.

DATES: *Effective Date:* December 10, 2012.

FOR FURTHER INFORMATION CONTACT: Roger Kaplan, Office of Field Operations, *Roger.Kaplan@dhs.gov* or 202–325–4543.

SUPPLEMENTARY INFORMATION:

I. Background

Title 19, Part 122, Code of Federal Regulations (CFR), sets forth regulations relating to the entry and clearance of aircraft in international commerce and the transportation of persons and cargo by aircraft in international commerce.

Generally, a civil aircraft arriving from a place outside of the United States is required to land at an airport designated as an international airport. Alternatively, the pilot of a civil aircraft may request permission to land at a specific airport, and, if landing rights are granted, the civil aircraft may land at that landing rights airport.

Section 236 of Public Law 98–573 (the Trade and Tariff Act of 1984), codified at 19 U.S.C. 58b, created an option for civil aircraft desiring to land at an airport other than an international airport or a landing rights airport. A civil aircraft arriving from a place outside of the United States may ask for permission to land at an airport designated by the Secretary of Homeland Security as a user fee airport.

Pursuant to 19 U.S.C. 58b, an airport may be designated as a user fee airport if the Commissioner of CBP as delegated by the Secretary of Homeland Security determines that the volume of business at the airport is insufficient to justify customs services at the airport and the governor of the state in which the airport is located approves the designation. Generally, the type of airport that would seek designation as a user fee airport would be one at which a company, such as an air courier service, has a specialized interest in regularly landing.

As the volume of business anticipated at this type of airport is insufficient to justify its designation as an international or landing rights airport, the availability of customs services is not paid for out of appropriations from the general treasury of the United States. Instead, customs services are provided on a fully reimbursable basis to be paid for by the user fee airport on behalf of the recipients of the services.

The fees which are to be charged at user fee airports shall be paid by each person using the customs services at the airport and shall be in the amount equal to the expenses incurred by the Commissioner of CBP in providing customs services which are rendered to such person at such airport, including the salary and expenses of those employed by the Commissioner of CBP to provide the customs services. To implement this provision, generally, the airport seeking the designation as a user fee airport or that airport's authority agrees to pay a flat fee for which the users of the airport are to reimburse the airport/airport authority. The airport/airport authority agrees to set and periodically review the charges to ensure that they are in accord with the airport's expenses.

The Commissioner of CBP designates airports as user fee airports pursuant to 19 U.S.C. 58b. If the Commissioner decides that the conditions for designation as a user fee airport are satisfied, a Memorandum of Agreement (MOA) is executed between the Commissioner of CBP and the local responsible official signing on behalf of the state, city or municipality in which the airport is located. In this manner, user fee airports are designated on a case-by-case basis. The regulation pertaining to user fee airports is 19 CFR 122.15. It addresses the procedures for obtaining permission to land at a user fee airport, the grounds for withdrawal of a user fee designation and includes the list of user fee airports designated by the Commissioner of CBP in accordance with 19 U.S.C. 58b.

Periodically, CBP updates the list of user fee airports at 19 CFR 122.15(b) to reflect those that have been recently designated by the Commissioner. A MOA approving the designation of user fee status for Bozeman Yellowstone International Airport was signed on March 16, 2012. This document updates the list of user fee airports by adding Bozeman Yellowstone International Airport, in Belgrade, Montana to the list.

II. Statutory and Regulatory Requirements

A. Inapplicability of Public Notice and Delayed Effective Date Requirements

Under the Administrative Procedure Act (5 U.S.C. 553(b)), an agency may waive the normal notice and comment requirements if it finds, for good cause, that they are impracticable, unnecessary, or contrary to the public interest. The final rule lists an airport already designated by the Commissioner of CBP in accordance with 19 U.S.C. 58b as a user fee airport. This amendment is a conforming change to update the list of user fee airports. Notice and comment for this rule is unnecessary and contrary to the public interest, because the rule merely conforms the regulatory text to reflect the Commissioners' designation of this airport as a user fee airport; it is technical in nature; and it relates only to management, organization, procedure, and practice. For the same reasons, pursuant to 5 U.S.C. 553(d)(3), a delayed effective date is not required.

B. The Regulatory Flexibility Act and Executive Order 12866

Because no notice of proposed rulemaking is required, the provisions of the Regulatory Flexibility Act (5 U.S.C. 601 *et seq.*) do not apply. This amendment does not meet the criteria for a ''significant regulatory action'' as specified in Executive Order 12866, as supplemented by Executive Order 13563.

C. Unfunded Mandates Reform Act of 1995

This rule will not result in the expenditure by State, local, and tribal governments, in the aggregate, or by the private sector, of $100 million or more in any one year, and it will not significantly or uniquely affect small governments. Therefore, no actions are necessary under the provisions of the Unfunded Mandates Reform Act of 1995.

D. Executive Order 13132

The rule will not have substantial direct effects on the States, on the relationship between the National Government and the States, or on the distribution of power and responsibilities among the various levels of government. Therefore, in accordance with section 6 of Executive Order 13123, this rule does not have sufficient federalism implications to warrant the preparation of a federalism summary impact statement.

E. Signing Authority

This document is limited to technical corrections of CBP regulations. Accordingly, it is being signed under the authority of 19 CFR 0.1(b).

List of Subjects in 19 CFR Part 122

Air carriers, Aircraft, Airports, Customs duties and inspection, Freight.

Amendments to Regulations

For the reasons set forth above, part 122, Code of Federal Regulations (19 CFR part 122) is amended as set forth below:

PART 122—AIR COMMERCE REGULATIONS

■ 1. The authority citation for Part 122 continues to read as follows:

Authority: 5 U.S.C. 301; 19 U.S.C. 58b, 66, 1431, 1433, 1436, 1448, 1459, 1590, 1594, 1623, 1624, 1644, 1644a, 2071 note.

§ 122.15 [Amended]

■ 2. The listing of user fee airports in § 122.15(b) is amended by adding, in alphabetical order, in the ''Location'' column ''Belgrade, Montana'' and on the same line, in the ''Name'' column ''Bozeman Yellowstone International Airport.''

Dated: December 5, 2012.

David V. Aguilar,

Deputy Commissioner, U.S. Customs and Border Protection.

[FR Doc. 2012–29752 Filed 12–7–12; 8:45 am]

BILLING CODE 9111–14–P

DEPARTMENT OF HOMELAND SECURITY

Coast Guard

33 CFR Part 100

[Docket No. USCG–2011–0551]

RIN 1625–AA00; 1625–AA08

Special Local Regulation and Safety Zone; America's Cup Sailing Events, San Francisco, CA; Correction

AGENCY: Coast Guard, DHS.

ACTION: Temporary final rule; correction.

SUMMARY: On July 17, 2012, the Coast Guard published in the **Federal Register** a temporary final rule establishing a special local regulation for sailing events scheduled to occur on the waters of San Francisco Bay adjacent to the City of San Francisco waterfront in the vicinity of the Golden Gate Bridge and Alcatraz Island. Inadvertently, this rule included errors in four navigational coordinates of the transit zone established for the 2013 America's Cup events. This document corrects those erroneous coordinates.

DATES: Effective on December 10, 2012.

ADDRESSES: Documents mentioned in this preamble are part of docket USCG–2011–0551. To view documents mentioned in this preamble as being available in the docket, go to *http://www.regulations.gov*, type the docket number in the ''SEARCH'' box and click ''SEARCH.'' Click on Open Docket Folder on the line associated with this rulemaking. You may also visit the Docket Management Facility in Room W12–140 on the ground floor of the Department of Transportation West Building, 1200 New Jersey Avenue SE., Washington, DC 20590, between 9 a.m. and 5 p.m., Monday through Friday, except Federal holidays.

FOR FURTHER INFORMATION CONTACT: If you have questions on this rule, call or email Lieutenant DeCarol Davis, U.S. Coast Guard Sector San Francisco; telephone (415) 399–7443 or email at *D11–PF-MarineEvents@uscg.mil*. If you have questions on viewing the docket, call Renee V. Wright, Program Manager, Docket Operations, telephone (202) 366–9826.

SUPPLEMENTARY INFORMATION: On July 17, 2012, the Coast Guard published a temporary final rule regulating the on-water activities associated with the ''Louis Vuitton Cup,'' ''Red Bull Youth America's Cup,'' and ''America's Cup Finals Match'' scheduled to occur in July, August, and September, 2013 (77 FR 41902). Among the regulations established by this temporary final rule was a transit zone created to facilitate the safe transit of vessels needing access to pier space and facilities along the City of San Francisco waterfront and to minimize other traffic that may obstruct the waterfront (33 CFR 100.T11–0551B(d)(6), to become effective July 4, 2013–September 23, 2013). An image illustrating the location of the transit zone is available in the docket.

On August 20, 2012, the Coast Guard became aware of errors in the transit zone coordinates after a member of the Coast Guard plotted the transit zone on vessel traffic management software and found four coordinates positioned on land and out of line with the concept of operations developed by the Coast Guard. All four errors can be attributed to data-entry errors, where a 4 was accidently typed as a 2 in the seconds of one coordinate, and a 2 was accidently typed as a 1 in the degrees of three other coordinates. When plotted, the erroneous coordinates do not reflect the transit zone as described in the

temporary final rule and shared with the public in diagrams and presentations. The narrative description of the transit zone in the temporary final rule, and the images distributed during outreach, accurately portray the operational intentions of the Coast Guard and the America's Cup regulated areas. To ensure that members of the public have the correct geographical positioning data to locate the regulated areas and navigate around the dangers associated with the sailing events, the Coast Guard is correcting these coordinates to align with the stated intent of the temporary final rule and the images distributed during public outreach. The location and restrictions of 33 CFR 100.T11–0551B remain as they were described on July 17, 2012, and are not changed by this correction.

In **Federal Register** document 2012–17305 published on July 17, 2012, (77 FR 41902), make the following correction:

§ 100.T11–0551B [Corrected]

■ 1. On page 41908, in the second column, revise the third sentence in paragraph (d)(6) of § 100.T11–0551B to read as follows:

* * * * *

(d) * * *

(6) * * * This transit zone is bounded by the following coordinates: 37°48′40″ N, 122°28′21″ W; 37°48′32″ N, 122°28′00″ W; 37°48′32″ N, 122°26′24″ W; 37°48′39″ N, 122°25′27″ W; 37°48′43″ N, 122°25′13″ W; 37°48′41″ N, 122°24′30″ W; 37°48′28″ N, 122°24′04″ W; 37°48′17″ N, 122°23′54″ W; 37°48′21″ N, 122°23′49″ W; 37°48′33″ N, 122°24′00″ W; 37°48′36″ N, 122°24′07″ W; 37°49′15″ N, 122°24′00″ W; 37°49′21″ N, 122°24′05″ W; 37°48′48″ N, 122°24′40″ W; 37°48′49″ N, 122°25′16″ W; 37°48′37″ N, 122°26′22″ W; 37°48′37″ N, 122°28′00″ W; 37°48′47″ N, 122°28′21″ W (NAD 83).* * *

* * * * *

Dated: November 16, 2012.

Cynthia L. Stowe,

Captain, U.S. Coast Guard, Captain of the Port San Francisco.

[FR Doc. 2012–29751 Filed 12–7–12; 8:45 am]

BILLING CODE 9110–04–P

DEPARTMENT OF VETERANS AFFAIRS

38 CFR Part 53

RIN 2900–AO54

Technical Revisions—State Veterans Homes

AGENCY: Department of Veterans Affairs.

ACTION: Final rule.

SUMMARY: The Department of Veterans Affairs (VA) amends its regulations governing VA assistance in hiring and retaining nurses in State Veterans Homes. These regulations must be updated because of recent changes to the Veterans Health Administration (VHA) organizational structure, which reassigned certain administrative duties of the Chief Consultant of the Office of Geriatrics and Extended Care to the Director of the Office of Geriatrics and Extended Care Operations.

DATES: *Effective Date:* This final rule is effective December 10, 2012.

FOR FURTHER INFORMATION CONTACT: Lisa Minor, Chief, Institutional Care Programs, Geriatrics and Extended Care Operations (10NC4), Veterans Health Administration, Department of Veterans Affairs, 810 Vermont Avenue NW., Washington, DC 20420, (202) 461–6782. (This is not a toll free number.)

SUPPLEMENTARY INFORMATION: VHA recently revised its organizational structure. Under VHA's new organizational structure, the Secretary of Veterans Affairs has delegated management and operations duties for State Veterans Homes to the Director of the Office of Geriatrics and Extended Care Operations through the Under Secretary for Health. The Secretary had formerly delegated this authority to the Chief Consultant of the Office of Geriatrics and Extended Care through the Under Secretary for Health. Consequently, VHA is revising its regulations to reflect the new delegation.

Sections 53.10, 53.11, 53.30, 53.40, and 53.41 of title 38 of the Code of Federal Regulations will be revised to name the Director of the Office of Geriatrics and Extended Care Operations as the person with the management and operations authority for State Veterans Homes. VA's internal mailbox code will also be removed from §§ 53.20 and 53.40.

Administrative Procedure Act

This final rule pertains strictly to agency organization. Accordingly, this rule is exempt from the prior notice-and-comment and delayed-effective-date requirements of 5 U.S.C. 553.

Effect of Rulemaking

Title 38 of the Code of Federal Regulations, as revised by this final rule, represents the exclusive legal authority on this subject. No contrary rules or procedures are authorized. All existing or subsequent VA guidance must be read to conform with this rulemaking if possible, or, if not possible, such guidance is superseded by this rulemaking.

Paperwork Reduction Act

This final rule contains no provisions constituting a collection of information under the Paperwork Reduction Act of 1995 (44 U.S.C. 3501–3521).

Regulatory Flexibility Act

The Secretary hereby certifies that this final rule will not have a significant economic impact on a substantial number of small entities as they are defined in the Regulatory Flexibility Act (5 U.S.C. 601–612). This final rule merely updates references to certain VA personnel referred to under 38 CFR part 53 and will not directly affect small entities. Therefore, pursuant to 5 U.S.C. 605(b), this rulemaking is exempt from the initial and final regulatory flexibility analysis requirements of sections 603 and 604.

Executive Order 12866 and 13563

Executive Orders 12866 and 13563 direct agencies to assess the costs and benefits of available regulatory alternatives and, when regulation is necessary, to select regulatory approaches that maximize net benefits (including potential economic, environmental, public health and safety effects, and other advantages; distributive impacts; and equity). Executive Order 13563 (Improving Regulation and Regulatory Review) emphasizes the importance of quantifying both costs and benefits, reducing costs, harmonizing rules, and promoting flexibility. Executive Order 12866 (Regulatory Planning and Review) defines a ''significant regulatory action'' requiring review by the Office of Management and Budget (OMB) as ''any regulatory action that is likely to result in a rule that may: (1) Have an annual effect on the economy of $100 million or more or adversely affect in a material way the economy, a sector of the economy, productivity, competition, jobs, the environment, public health or safety, or State, local, or tribal governments or communities; (2) Create a serious inconsistency or otherwise interfere with an action taken or planned by another agency; (3) Materially alter the budgetary impact of entitlements, grants, user fees, or loan programs or the rights and obligations of recipients thereof; or (4) Raise novel legal or policy issues arising out of legal mandates, the President's priorities, or the principles set forth in this Executive Order.''

The economic, interagency, budgetary, legal, and policy implications of this regulatory action

have been examined, and it has been determined not to be a significant regulatory action as defined by Executive Order 12866.

Unfunded Mandates Reform Act

The Unfunded Mandates Reform Act of 1995 requires, at 2 U.S.C. 1532, that agencies prepare an assessment of anticipated costs and benefits before issuing any rule that may result in the expenditure by State, local, and tribal governments, in the aggregate, or by the private sector, of $100 million or more (adjusted annually for inflation) in any given year. This rule will have no such effect on State, local, and tribal governments, or on the private sector.

Catalog of Federal Domestic Assistance Numbers

The Catalog of Federal Domestic Assistance program numbers and titles are: 64.005, Grants to States for Construction of State Home Facilities; 64.008, Veterans Domiciliary Care; 64.009, Veterans Medical Care Benefits; 64.010, Veterans Nursing Home Care; 64.014, Veterans State Domiciliary Care; 64.015, Veterans State Nursing Home Care; 64.016, Veterans State Hospital Care; 64.018, Sharing Specialized Medical Resources; 64.022, Veterans Home Based Primary Care; 64.024, VA Homeless Providers Grant and Per Diem Program; and 64.026, Veterans State Adult Day Health Care.

Signing Authority

The Secretary of Veterans Affairs, or designee, approved this document and authorized the undersigned to sign and submit the document to the Office of the Federal Register for publication electronically as an official document of the Department of Veterans Affairs. John R. Gingrich, Chief of Staff, Department of Veterans Affairs, approved this document on December 4, 2012 for publication.

List of Subjects in 38 CFR Part 53

Administrative practice and procedure, Adult day health care, Alcohol abuse, Alcoholism, Claims, Day care, Dental health, Drug abuse, Foreign relations, Government contracts, Grant programs—health, Grant programs—veterans, Health care, Health facilities, Health professions, Health records, Homeless, Medical and dental schools, Medical devices, Medical research, Mental health programs, Nursing homes, Philippines, Reporting and recordkeeping requirements, Scholarships and fellowships, Travel and transportation expenses, Veterans.

Dated: December 5, 2012.

Robert C. McFetridge,

Director of Regulation Policy and Management, Office of General Counsel, Department of Veterans Affairs.

For the reasons stated in the preamble, VA amends 38 CFR part 53 as follows:

PART 53—PAYMENTS TO STATES FOR PROGRAMS TO PROMOTE THE HIRING AND RETENTION OF NURSES AT STATE VETERANS HOMES

■ 1. The authority citation for part 53 continues to read as follows:

Authority: 38 U.S.C. 101, 501, 1744.

§ 53.10 [Amended]

■ 2. Amend § 53.10 by removing ''Chief Consultant, Geriatrics and Extended Care'' and adding, in its place, ''Director, Geriatrics and Extended Care Operations''.

§ 53.11 [Amended]

■ 3. Amend § 53.11(a)(5) by removing ''Chief Consultant, Geriatrics and Extended Care'' and adding, in its place, ''Director, Geriatrics and Extended Care Operations''.

§ 53.20 [Amended]

■ 4. Amend § 53.20(a) by removing ''(114)''.

§ 53.30 [Amended]

■ 5. Amend § 53.30(b) by removing ''Chief Consultant, Geriatrics and Extended Care'' and adding, in its place, ''Director, Geriatrics and Extended Care Operations''.

§ 53.40 [Amended]

■ 6. Amend § 53.40 by removing ''Chief Consultant, Geriatrics and Extended Care (114)'' and adding, in its place, ''Director, Geriatrics and Extended Care Operations''.

§ 53.41 [Amended]

■ 7. Amend § 53.41 by:

■ a. Removing ''Chief Consultant, Geriatrics and Extended Care'' and adding, in its place, ''Director, Geriatrics and Extended Care Operation''.

■ b. Removing ''Chief Consultant'' and adding, in its place, ''Director''.

[FR Doc. 2012–29750 Filed 12–7–12; 8:45 am]

BILLING CODE 8320–01–P

ENVIRONMENTAL PROTECTION AGENCY

40 CFR Part 52

[EPA–R03–OAR–2010–0143; FRL–9759–6]

Approval and Promulgation of Air Quality Implementation Plans; Maryland; The 2002 Base Year Inventory for the Baltimore, MD Nonattainment Area for the 1997 Fine Particulate Matter National Ambient Air Quality Standard

AGENCY: Environmental Protection Agency (EPA).

ACTION: Direct final rule.

SUMMARY: EPA is taking direct final action to approve the fine particulate matter ($PM_{2.5}$) 2002 base year emissions inventory portion of the State of Maryland State Implementation Plan (SIP) revision submitted by the State of Maryland, through the Maryland Department of the Environment (MDE), on June 6, 2008 for Baltimore, Maryland. The emissions inventory is part of Maryland's June 6, 2008 SIP revision that was submitted to meet nonattainment requirements related to the Baltimore, Maryland nonattainment area (hereafter referred to as Baltimore Area or Area) for Maryland's 1997 $PM_{2.5}$ National Ambient Air Quality Standard (NAAQS) SIP. EPA is approving the 2002 base year $PM_{2.5}$ emissions inventory for Baltimore, Maryland submitted by MDE in accordance with the requirements of the Clean Air Act (CAA).

DATES: This rule is effective on February 8, 2013 without further notice, unless EPA receives adverse written comment by January 9, 2013. If EPA receives such comments, it will publish a timely withdrawal of the direct final rule in the **Federal Register** and inform the public that the rule will not take effect.

ADDRESSES: Submit your comments, identified by Docket ID Number EPA–R03–OAR–2010–0143 by one of the following methods:

A. *www.regulations.gov.* Follow the on-line instructions for submitting comments.

B. *Email: mastro.donna@epa.gov.*

C. Mail: EPA–R03–OAR–2010–0143, Donna Mastro, Acting Associate Director, Office of Air Program Planning, Mailcode 3AP30, U.S. Environmental Protection Agency, Region III, 1650 Arch Street, Philadelphia, Pennsylvania 19103.

D. *Hand Delivery:* At the previously-listed EPA Region III address. Such deliveries are only accepted during the Docket's normal hours of operation, and

special arrangements should be made for deliveries of boxed information.

Instructions: Direct your comments to Docket ID No. EPA–R03–OAR–2010–0143. EPA's policy is that all comments received will be included in the public docket without change, and may be made available online at *www.regulations.gov,* including any personal information provided, unless the comment includes information claimed to be Confidential Business Information (CBI) or other information whose disclosure is restricted by statute. Do not submit information that you consider to be CBI or otherwise protected through *www.regulations.gov* or email. The *www.regulations.gov* Web site is an ''anonymous access'' system, which means EPA will not know your identity or contact information unless you provide it in the body of your comment. If you send an email comment directly to EPA without going through *www.regulations.gov,* your email address will be automatically captured and included as part of the comment that is placed in the public docket and made available on the Internet. If you submit an electronic comment, EPA recommends that you include your name and other contact information in the body of your comment and with any disk or CD–ROM you submit. If EPA cannot read your comment due to technical difficulties and cannot contact you for clarification, EPA may not be able to consider your comment. Electronic files should avoid the use of special characters, any form of encryption, and be free of any defects or viruses.

Docket: All documents in the electronic docket are listed in the *www.regulations.gov* index. Although listed in the index, some information is not publicly available, i.e., CBI or other information whose disclosure is restricted by statute. Certain other material, such as copyrighted material, is not placed on the Internet and will be publicly available only in hard copy form. Publicly available docket materials are available either electronically in *www.regulations.gov* or in hard copy during normal business hours at the Air Protection Division, U.S. Environmental Protection Agency, Region III, 1650 Arch Street, Philadelphia, Pennsylvania 19103. Copies of the State submittal are available at the Maryland Department of the Environment, 1800 Washington Boulevard, Suite 705, Baltimore, Maryland 21230.

FOR FURTHER INFORMATION CONTACT: Asrah Khadr, (215) 814–2071, or by email at *khadr.asrah@epa.gov.*

SUPPLEMENTARY INFORMATION:

I. Background
II. Summary of SIP Revision
III. Final Action
IV. Statutory and Executive Order Reviews

I. Background

On July 16, 1997, EPA promulgated the 1997 $PM_{2.5}$ NAAQS, including an annual standard of 15.0 micrograms per cubic meter (μg/m³) based on a 3-year average of annual mean $PM_{2.5}$ concentrations, and a 24-hour (or daily) standard of 65 μg/m³ based on a 3-year average of the 98th percentile of 24-hour concentrations. 62 FR 38652 (July 18, 1997). EPA established the standards based on significant evidence and numerous health studies demonstrating that serious health effects are associated with exposures to $PM_{2.5}$.

Following promulgation of a new or revised NAAQS, EPA is required by the CAA to designate areas throughout the United States as attaining or not attaining the NAAQS; this designation process is described in section 107(d)(1) of the CAA. In 1999, EPA and state air-quality agencies initiated the monitoring process for the 1997 $PM_{2.5}$ NAAQS and, by January 2001, established a complete set of air-quality data. On January 5, 2005, EPA published initial air-quality designations for the 1997 $PM_{2.5}$ NAAQS (70 FR 944), which became effective on April 5, 2005, based on air-quality monitoring data for calendar years 2001–03.

On April 14, 2005, EPA promulgated a supplemental rule amending the agency's initial designations (70 FR 19844), with the same effective date (April 5, 2005) as that which was promulgated at 70 FR 944. As a result of this supplemental rule, $PM_{2.5}$ nonattainment designations are in effect for 39 areas, comprising 208 counties within 20 states (and the District of Columbia) nationwide, with a combined population of approximately 88 million. The Baltimore Area which is the subject of this rulemaking was included in the list of areas not attaining the 1997 $PM_{2.5}$ NAAQS.

On June 6, 2008, the State of Maryland submitted a revision to the Maryland SIP (#08–04) to meet nonattainment requirements for the Baltimore Area. On May 22, 2012 (77 FR 30208), EPA determined that Maryland had attained the 1997 $PM_{2.5}$ NAAQS in the Baltimore Area. That determination was based upon quality assured, quality controlled and certified ambient air monitoring data that showed the Area had monitored attainment of the 1997 $PM_{2.5}$ NAAQS for the 2007–2009 monitoring period and that continued to show attainment of the 1997 $PM_{2.5}$ NAAQS based on the 2008–2010 data. The May 22, 2012 determination suspended the requirements for Maryland to submit an attainment demonstration, associated reasonably available control measures, a reasonable further progress plan, contingency measures, and other planning SIP revisions related to attainment of the standard for so long as the nonattainment area continues to meet the 1997 $PM_{2.5}$ NAAQS. On June 21, 2012, MDE withdrew portions of the June 6, 2008 Baltimore, Maryland 1997 $PM_{2.5}$ SIP revision including the attainment plan, analysis of reasonably available control measures, attainment demonstration, contingency plans and mobile source budgets. To meet the requirements of CAA section 172(c)(3), MDE did not request the withdrawal of the 2002 base year emission inventory portion of the June 6, 2008 1997 $PM_{2.5}$ SIP revision. Section 172(c)(3) of the CAA requires submission and approval of a comprehensive, accurate, and current inventory of actual emissions.

II. Summary of SIP Revision

The 2002 base year emission inventory submitted by MDE on June 6, 2008 for Baltimore, Maryland includes emissions estimates that cover the general source categories of stationary point sources, stationary nonpoint sources, nonroad mobile sources and onroad mobile sources. The pollutants that comprise the inventory are nitrogen oxides (NO_X), volatile organic compounds (VOCs), $PM_{2.5}$, coarse particles (PM_{10}), ammonia (NH_3), and sulfur dioxide (SO_2). EPA has reviewed the results, procedures and methodologies for the 2002 base year emissions inventory submitted by MDE for Baltimore, Maryland. The year 2002 was selected by MDE as the base year for the emissions inventory per 40 CFR 51.1008(b). A discussion of the emissions inventory development as well as the emissions inventory can be found in the June 6, 2008 SIP submittal.

The CAA section 172(c)(3) emissions inventory is developed by the incorporation of data from multiple sources. States were required to develop and submit to EPA a triennial emissions inventory according to the Consolidated Emissions Reporting Rule (CERR) for all source categories (i.e., point, area, nonroad mobile and on-road mobile). The 2002 emissions inventory was based on data developed by MDE. The data were developed according to current EPA emissions inventory guidance, ''Emissions Inventory Guidance for Implementation of Ozone and Particulate Matter NAAQS and Regional Haze Regulations,'' August

2005. EPA agrees that the process used to develop this emissions inventory is adequate to meet the requirements of CAA section 172(c)(3), the implementing regulations, and EPA guidance for emission inventories. More information regarding the review of the base year inventory can be found in the technical support document (TSD) that is located in this docket.

III. Final Action

EPA is approving the 2002 base year emissions inventory portion of the SIP revision submitted by Maryland through MDE on June 6, 2008 for Baltimore, Maryland. EPA is publishing this rule without prior proposal because EPA views this as a noncontroversial amendment and anticipates no adverse comment. However, in the ''Proposed Rules'' section of today's **Federal Register**, EPA is publishing a separate document that will serve as the proposal to approve the SIP revision if adverse comments are filed. This rule will be effective on February 8, 2013 without further notice unless EPA receives adverse comment by January 9, 2013. If EPA receives adverse comment, EPA will publish a timely withdrawal in the **Federal Register** informing the public that the rule will not take effect. EPA will address all public comments in a subsequent final rule based on the proposed rule. EPA will not institute a second comment period on this action. Any parties interested in commenting must do so at this time.

IV. Statutory and Executive Order Reviews

A. General Requirements

Under the CAA, the Administrator is required to approve a SIP submission that complies with the provisions of the CAA and applicable Federal regulations. 42 U.S.C. 7410(k); 40 CFR 52.02(a). Thus, in reviewing SIP submissions, EPA's role is to approve state choices, provided that they meet the criteria of the CAA. Accordingly, this action merely approves state law as meeting Federal requirements and does not impose additional requirements beyond those imposed by state law. For that reason, this action:

- Is not a ''significant regulatory action'' subject to review by the Office of Management and Budget under Executive Order 12866 (58 FR 51735, October 4, 1993);
- Does not impose an information collection burden under the provisions of the Paperwork Reduction Act (44 U.S.C. 3501 *et seq.*);
- Is certified as not having a significant economic impact on a substantial number of small entities under the Regulatory Flexibility Act (5 U.S.C. 601 *et seq.*);
- Does not contain any unfunded mandate or significantly or uniquely affect small governments, as described in the Unfunded Mandates Reform Act of 1995 (Pub. L. 104–4);
- Does not have Federalism implications as specified in Executive Order 13132 (64 FR 43255, August 10, 1999);
- Is not an economically significant regulatory action based on health or safety risks subject to Executive Order 13045 (62 FR 19885, April 23, 1997);
- Is not a significant regulatory action subject to Executive Order 13211 (66 FR 28355, May 22, 2001);
- Is not subject to requirements of Section 12(d) of the National Technology Transfer and Advancement Act of 1995 (15 U.S.C. 272 note) because application of those requirements would be inconsistent with the CAA; and
- Does not provide EPA with the discretionary authority to address, as appropriate, disproportionate human health or environmental effects, using practicable and legally permissible methods, under Executive Order 12898 (59 FR 7629, February 16, 1994).

In addition, this rule does not have tribal implications as specified by Executive Order 13175 (65 FR 67249, November 9, 2000), because the SIP is not approved to apply in Indian country located in the state, and EPA notes that it will not impose substantial direct costs on tribal governments or preempt tribal law.

B. Submission to Congress and the Comptroller General

The Congressional Review Act, 5 U.S.C. 801 *et seq.,* as added by the Small Business Regulatory Enforcement Fairness Act of 1996, generally provides that before a rule may take effect, the agency promulgating the rule must submit a rule report, which includes a copy of the rule, to each House of the Congress and to the Comptroller General of the United States. EPA will submit a report containing this action and other required information to the U.S. Senate, the U.S. House of Representatives, and the Comptroller General of the United States prior to publication of the rule in the **Federal Register**. A major rule cannot take effect until 60 days after it is published in the **Federal Register**. This action is not a ''major rule'' as defined by 5 U.S.C. 804(2).

C. Petitions for Judicial Review

Under section 307(b)(1) of the CAA, petitions for judicial review of this action must be filed in the United States Court of Appeals for the appropriate circuit by February 8, 2013. Filing a petition for reconsideration by the Administrator of this final rule does not affect the finality of this action for the purposes of judicial review nor does it extend the time within which a petition for judicial review may be filed, and shall not postpone the effectiveness of such rule or action. Parties with objections to this direct final rule are encouraged to file a comment in response to the parallel notice of proposed rulemaking for this action published in the proposed rules section of today's **Federal Register**, rather than file an immediate petition for judicial review of this direct final rule, so that EPA can withdraw this direct final rule and address the comment in the proposed rulemaking.

This action pertaining to the $PM_{2.5}$ 2002 base year emissions inventory portion of the Maryland SIP may not be challenged later in proceedings to enforce its requirements. (*See* section 307(b)(2).)

List of Subjects in 40 CFR Part 52

Environmental protection, Air pollution control, Carbon monoxide, Incorporation by reference, Nitrogen dioxide, Particulate matter, Reporting and recordkeeping requirements, Sulfur oxides, Volatile organic compounds.

Dated: November 21, 2012.

W.C. Early,

Acting Regional Administrator, Region III.

40 CFR part 52 is amended as follows:

PART 52—APPROVAL AND PROMULGATION OF IMPLEMENTATION PLANS

■ 1. The authority citation for part 52 continues to read as follows:

Authority: 42 U.S.C. 7401 *et seq.*

Subpart V—Maryland

■ 2. In § 52.1070, the table in paragraph (e) is amended by adding at the end of the table an entry for 2002 Base Year Emissions Inventory for the 1997 fine particulate matter ($PM_{2.5}$) standard to read as follows:

§ 52.1070 Identification of plan.

* * * * *

(e) * * *

Name of non-regulatory SIP revision	Applicable geographic area	State submittal date	EPA approval date	Additional explanation
* * *	* * *	*	* * *	*
2002 Base Year Emissions Inventory for the 1997 fine particulate matter ($PM_{2.5}$) standard.	Baltimore, Maryland 1997 $PM_{2.5}$ nonattainment area.	6/8/08	12/10/12 [*Insert page number where the document begins*].	§ 52.1075(n)

■ 3. In § 52.1075, paragraph (n) is added to read as follows:

§ 52.1075 Base year emissions inventory.

* * * * *

(n) EPA approves as a revision to the Maryland State Implementation Plan the 2002 base year emissions inventory for the Baltimore, Maryland 1997 fine particulate matter ($PM_{2.5}$) nonattainment area submitted by the Maryland Department of Environment on June 6, 2008. The 2002 base year emissions inventory includes emissions estimates that cover the general source categories of point sources, non-road mobile sources, area sources, on-road mobile sources, and biogenic sources. The pollutants that comprise the inventory are nitrogen oxides (NO_X), volatile organic compounds (VOCs), $PM_{2.5}$, coarse particles (PM_{10}), ammonia (NH_3), and sulfur dioxide (SO_2).

[FR Doc. 2012–29610 Filed 12–7–12; 8:45 am]

BILLING CODE 6560–50–P

ENVIRONMENTAL PROTECTION AGENCY

40 CFR Part 52

[EPA–R09–OAR–2012–0732; FRL–9739–5]

Approval of Air Quality Implementation Plans; California; Eastern Kern, Imperial, Placer, and Yolo-Solano; Prevention of Significant Deterioration

AGENCY: Environmental Protection Agency (EPA).

ACTION: Direct final rule.

SUMMARY: EPA is taking final action on revisions to the California State Implementation Plan (SIP) under the Clean Air Act (CAA or Act). EPA is approving four permitting rules submitted for the Eastern Kern Air Pollution Control District (EKAPCD), Imperial County Air Pollution Control District (ICAPCD), Placer County Air Pollution Control District (PCAPCD), and Yolo-Solano Air Quality Management District (YSAQMD) portions of the California SIP. The State of California is required under part C of title I of the Act to adopt and implement a SIP-approved Prevention of Significant Deterioration (PSD) permit program. We are revising the SIP to incorporate EKAPCD Rule 210.4—Prevention of Significant Deterioration, ICAPCD Rule 904—Prevention of Significant Deterioration (PSD) Permit Program, PCAPCD Rule 518—Prevention of Significant Deterioration (PSD) Permit Program, and YSAQMD Rule 3.24—Prevention of Significant Deterioration. The approval of these rules will establish a PSD permit program in each District for pre-construction review of certain new and modified major stationary sources in attainment or unclassifiable areas.

DATES: This rule is effective on February 8, 2013, and the incorporation by reference of certain publications listed in the rule is approved by the Director of the **Federal Register** as of February 8, 2013, unless EPA receives adverse comments by January 9, 2013. If adverse comments are received, EPA will publish a timely withdrawal in the **Federal Register** informing the public that this rule, or the relevant provisions of the rule, will not take effect.

ADDRESSES: Submit comments, identified by docket number EPA–R09–OAR–2012–0732, by one of the following methods:

1. *Federal eRulemaking Portal: www.regulations.gov.* Follow the on-line instructions.
2. *Email: R9airpermits@epa.gov.*
3. *Mail or deliver:* Gerardo Rios (Air-3), U.S. Environmental Protection Agency Region IX, 75 Hawthorne Street, San Francisco, CA 94105–3901.

Instructions: All comments received will be included in the public docket without change and may be made available online at *www.regulations.gov,* including any personal information provided, unless the comment includes Confidential Business Information (CBI) or other information whose disclosure is restricted by statute. Information that you consider CBI or otherwise protected should be clearly identified as such and should not be submitted through *www.regulations.gov* or email. The *www.regulations.gov* Web site is an ''anonymous access'' system, and EPA will not know your identity or contact information unless you provide it in the body of your comment. If you send email directly to EPA, your email address will be automatically captured and included as part of the public comment. If EPA cannot read your comment due to technical difficulties and cannot contact you for clarification, EPA may not be able to consider your comment.

Docket: The index to the docket for this action is available electronically at *www.regulations.gov* and in hard copy at EPA Region IX, 75 Hawthorne Street, San Francisco, California. While all documents in the docket are listed in the index, some information may be publicly available only at the hard copy location (e.g., copyrighted material), and some may not be publicly available in either location (e.g., CBI). To inspect the hard copy materials, please schedule an appointment during normal business hours with the contact listed in the **FOR FURTHER INFORMATION CONTACT** section below.

FOR FURTHER INFORMATION CONTACT: Lisa Beckham, Permits Office (AIR–3), U.S. Environmental Protection Agency, Region IX, (415) 972–3811, *beckham.lisa@epa.gov.*

SUPPLEMENTARY INFORMATION: Throughout this document, ''we,'' ''us'' and ''our'' refer to EPA.

Table of Contents

I. The State's Submittal
- A. What rules did the State submit?
- B. Are there other versions of these rules?
- C. What is the purpose of the submitted rules?

II. EPA's Evaluation
- A. How is EPA evaluating these rules?
- B. Do the rules meet the evaluation criteria?
- C. Significant Impact Levels for $PM_{2.5}$
- D. Transfer of Existing EPA-Issued PSD Permits
- E. What action is EPA finalizing?
- F. Why is EPA using a direct final rule?

III. EPA's Final Action

IV. Statutory and Executive Order Reviews

I. The State's Submittal

A. What rules did the State submit?

Table 1 lists the rules on which we are taking action along with the dates on which they were adopted or amended by the applicable local agency and

submitted to EPA by the California Air Resources Board (CARB).

TABLE 1—SUBMITTED RULES

Local agency	Rule No.	Rule title	Adopted	Submitted
EKAPCD	210.4	Prevention of Significant Deterioration	1/12/2012	4/25/2012
ICAPCD	904	Prevention of Significant Deterioration (PSD) Permit Program	12/20/2011	2/23/2012
PCAPCD	518	Prevention of Significant Deterioration (PSD) Permit Program	2/10/2011	6/21/2011
YSAQMD	3.24	Prevention of Significant Deterioration	6/13/2012	7/3/2012

The rule submittals were found to meet the completeness criteria in 40 CFR part 51 Appendix V, which must be met before formal EPA review.

B. Are there other versions of these rules?

There are no previous versions of these rules in the SIP. However, EKAPCD originally adopted EKAPCD Rule 210.4 on September 9, 1984 and amended it on November 18, 1985, and September 2, 1999. We are only taking action on the currently submitted version of each rule as listed in Table 1.

C. What is the purpose of the submitted rules?

Section 110(a) of the CAA requires states to adopt and submit regulations for the implementation, maintenance and enforcement of the primary and secondary national ambient air quality standards (NAAQS). Specifically, sections 110(a)(2)(C), 110(a)(2)(D)(i)(II), and 110(a)(2)(J) require such state plans to meet the applicable requirements of section 165 relating to a pre-construction permit program for the prevention of significant deterioration of air quality and visibility protection. The purpose of the rule submittals that are addressed in this action is to establish and implement a pre-construction PSD permit program as required by section 165 of the CAA for certain new and modified major stationary sources located in attainment areas. Because the State of California does not currently have a SIP-approved PSD program within EKAPCD, ICAPCD, PCAPCD, and YSAQMD (referred to hereinafter as the ''Districts''), EPA is currently the PSD permitting authority for each District. Inclusion of these rules into the SIP transfers PSD permitting authority from EPA to the Districts. EPA will assume the role of overseeing the PSD permitting program within each District.

II. EPA's Evaluation

A. How is EPA evaluating these rules?

The relevant statutory provisions for our review of the submitted rules include CAA sections 110(a), 110(l), and 165 and part 51, section 166 of title 40 of the Code of Federal Regulations (40 CFR 51.166). Section 110(a) requires, among other things, that SIP rules be enforceable, while section 110(l) precludes EPA approval of SIP revisions that would interfere with any applicable requirements concerning attainment and reasonable further progress. Section 165 of the CAA requires states to adopt a pre-construction permitting program for certain new and modified major stationary sources located in attainment or unclassifiable areas. 40 CFR 51.166 establishes the specific requirements for SIP-approved PSD permit programs that must be met to satisfy the requirements of section 165 of the CAA.

B. Do the rules meet the evaluation criteria?

With some exclusions and revisions, EKAPCD Rule 210.4, ICAPCD Rule 904, PCAPCD Rule 518, and YSAQMD Rule 3.24 incorporate by reference EPA's PSD permit program at 40 CFR 52.21, as of January 12, 2012, December 20, 2011, February 10, 2011, and July 12, 2012, respectively. We generally consider EPA's PSD permit program to be consistent with the criteria in 40 CFR 51.166. However, we conducted a review of each rule to ensure that all requirements of 40 CFR 51.166 were met. Our evaluations are available as an attachment to the technical support document (TSD) for this rulemaking. We also reviewed the revisions the Districts made to the provisions of 40 CFR 52.21 that were incorporated by reference into each rule, such as revising certain terms and definitions to reflect the fact that the Districts, rather than the EPA, will be the PSD permitting authority. Based on our evaluation we have concluded each rule meets the requirements of 40 CFR 51.166 for a PSD program.

Specifically, EKAPCD Rule 210.4 makes significant revisions to the applicability procedures and definitions for major modification, actual emissions, baseline actual emission, and net emissions increase as incorporated by reference in 40 CFR 52.21(a)(2) and (b). EKAPCD Rule 210.4 also excludes the Actuals Plantwide Applicability Limits (PALs) provisions contained in 40 CFR 52.21(aa). These revisions are intended to implement a PSD program that does not contain the 2002 NSR Reform provisions (see generally 67 FR 80,185 (Dec. 31, 2002)). Based on our evaluation of Rule 210.4 and the EKAPCD's Staff Report, we have concluded that Rule 210.4 is at least as stringent, in all respects, as the requirements of 40 CFR 51.166 for a PSD program. A more detailed discussion of those revisions and our analysis are in the TSD for this rulemaking.

We note that three of the District rules under consideration in this action also rely on existing SIP-approved permit application processing requirements, which are found in EKAPCD Rule 210.1, ICAPCD Rule 206, and PCAPCD Rule 502, for meeting some of the PSD program requirements.

We also reviewed clarifying information provided by the Districts in letters dated July 19, 2012 (EKAPCD), July 10, 2012 (ICAPCD), July 6, 2012 (PCAPCD), and August 7, 2012 (YSAQMD). Based on our review of the Districts' rules as well as these clarification letters, we have determined that the Districts' PSD SIP rules are acceptable under CAA sections 110(a), 110(l) and 165 and 40 CFR 51.166. EPA's TSD for this rulemaking has more information about these rules, including our evaluation and recommendation to approve them into the SIP.

C. Significant Impact Levels for $PM_{2.5}$

Eastern Kern Rule 210.4, Imperial Rule 904, and Placer Rule 518 incorporate by reference the $PM_{2.5}$ significant impact levels (SILs) found in 40 CFR 52.21(k)(2). Yolo-Solano Rule 3.24 does not incorporate these $PM_{2.5}$ SILs, by reference or otherwise. Consistent with 40 CFR 51.166(k)(2), these $PM_{2.5}$ SILs are an optional portion of the PSD permitting program. However, EPA's authority to implement the $PM_{2.5}$ SILs for PSD purposes is currently subject to litigation, *Sierra Club* v. *EPA,* Case No. 10–1413 (D.C. Circuit). As a result, EPA has come to recognize that the regulatory text it adopted in 40 CFR 51.166(k)(2) and 40

CFR 52.21(k)(2) does not accurately reflect EPA's intent, because the text does not afford permitting authorities sufficient discretion to deny sources use of the SILs where their use would lead to a new violation of the NAAQS or increment. In our response brief to the Court in this litigation, EPA requested that the Court remand and vacate 40 CFR 51.166(k)(2) and 40 CFR 52.21(k)(2) so that we may initiate a rulemaking to make revisions to the regulatory text.

Paragraph (k)(1) of 40 CFR section 52.21 requires that sources applying for a new PSD permit demonstrate that any allowable emission increases from the proposed source or modification, in conjunction with all other applicable emissions increases or reductions, will not cause or contribute to a violation of any NAAQS or any applicable increment. In the preamble to the 2010 final rule adding the (k)(2) provision to section 52.21, EPA advised that, ''notwithstanding the existence of a SIL, permitting authorities should determine when it may be appropriate to conclude that even a *de minimis* impact will 'cause or contribute' to an air quality problem and to seek remedial action from the proposed new source or modification.'' Prevention of Significant Deterioration (PSD) for Particulate Matter Less than 2.5 Micrometers ($PM_{2.5}$)—Increments, Significant Impact Levels (SILs) and Significant Monitoring Concentration (SMC), 75 FR 64,864, 64,892 (Oct. 20, 2010). In another passage of the preamble to the 2010 final rule, EPA also observed that ''the use of a SIL may not be appropriate when a substantial portion of any NAAQS or increment is known to be consumed.'' *Id.* at 64,894.

We requested clarification from EKAPCD, PCAPCD, and ICAPCD concerning their interpretation of their respective rules that incorporate by reference 40 CFR 52.21(k)(2). Consistent with the statements by EPA in the preamble to the 2010 final rule, EKAPCD, PCAPCD, and ICAPCD confirmed that they do not interpret section 52.21(k)(2) to preclude them from exercising the discretion to determine when it may be appropriate to conclude that even a *de minimis* impact on air quality (an impact below the $PM_{2.5}$ SIL values) will cause or contribute to an air quality problem and to seek remedial action from the proposed new source or modification. See clarification letters from EKAPCD dated August 21, 2012, from ICAPCD dated August 21, 2012, and from PCAPCD dated August 20, 2012. Based on this interpretation, each of these Districts has clarified that it will not read section 52.21(k)(2) as an absolute ''safe harbor,'' but will exercise discretion to determine whether a particular application of the $PM_{2.5}$ SILs is appropriate when a substantial portion of the $PM_{2.5}$ NAAQS or increment is known to be consumed. These Districts have also clarified that they retain the discretion to require additional information from a permit applicant as needed to assure that the source will not cause or contribute to a violation of any NAAQS or applicable increment pursuant to section 52.21(k)(1).

Based on these clarifications provided by EKAPCD, PCAPCD, and ICAPCD, we find that these Districts' PSD rules are approvable and consistent with the Act and the requirements for a PSD program.

D. Transfer of Existing EPA-Issued PSD Permits

The Districts have also requested approval to exercise their authority, as applicable, to administer the PSD program with respect to those sources located in the Districts that have existing PSD permits issued by EPA. This would include authority to conduct general administration of these existing permits, authority to process and issue any and all subsequent PSD permit actions relating to such permits (e.g., modifications, amendments, or revisions of any nature), and authority to enforce such permits. Pursuant to the criteria under section 110(a)(2)(E)(i) of the CAA, we have determined that these districts have the authority, personnel, and funding to implement the PSD program within each District for existing EPA-issued permits. Upon the effective date of our approval of the Districts' PSD programs into the SIP, the EPA-issued PSD permits will be transferred to each District, as applicable. A list of these EPA-issued permits is provided as an attachment to the TSD for this action. In addition, any PSD permit applications submitted to EPA for which EPA has not yet proposed a permit decision upon the effective date of this action will also be transferred to the applicable District upon the effective date of this rule.

E. What action is EPA finalizing?

EPA is finalizing a SIP revision for the Eastern Kern, Imperial County, Placer County, and Yolo-Solano portions of the California SIP. This SIP revision will be codified in 40 CFR 52.220 by incorporating by reference the District PSD rules listed in Table 1. In addition, the letters from the Districts to EPA described elsewhere in this preamble that provide certain clarifications concerning the Districts' rules will be included as additional material in 40 CFR 52.220. The regulatory text addressing this action also makes it clear that EPA is relying, in part, on the clarifications provided in the Districts' clarification letters in taking this final approval action. As such, the Districts' implementation of the PSD program in a manner consistent with these clarifications is a pre-condition of today's final approval of this PSD SIP revision. This SIP revision provides a federally approved and enforceable mechanism for the District to issue pre-construction PSD permits for certain new and modified major stationary sources subject to PSD review within the Districts. The regulatory text at 40 CFR 52.270 will also be revised so that these Districts are no longer a part of California's Federal Implementation Plan for the PSD program.

F. Why is EPA using a direct final rule?

EPA is publishing this action without prior proposal because the Agency views this as a noncontroversial action and anticipates no adverse comments. As discussed above, this approval action will transfer PSD permitting program responsibility and authority from EPA to the Districts, which will generally continue to implement the PSD program consistent with 40 CFR section 52.21 as incorporated by reference into the Districts' rules. However, in the ''Proposed Rules'' section of this **Federal Register** publication, EPA is publishing a separate document that will serve as the proposal to approve this SIP revision should relevant adverse comments be filed on this direct final rule. We will not institute a second comment period on this action. Any parties interested in commenting must do so at this time. For further information about commenting on this rule, see the **ADDRESSES** section of this document.

This rule will be effective February 8, 2013 without further notice unless the Agency receives relevant adverse comments by January 9, 2013. If EPA receives such comments, then EPA will publish a timely withdrawal in the **Federal Register** informing the public that this direct final rule will not take effect. All public comments received would then be addressed in any subsequent final rule based on the proposed rule. Please note that if EPA receives adverse comment on a distinct provision of this rule and if that provision may be severed from the remainder of the rule, EPA may adopt as final those provisions of the rule that are not the subject of an adverse comment. In such case, EPA would publish a timely withdrawal in the

Federal Register indicating which provisions we are withdrawing. The provisions that are not withdrawn will become effective on the date set out above, notwithstanding adverse comment on any other provision.

III. EPA's Final Action

EPA is approving the following CARB submittals into the California SIP to establish a PSD permit program for pre-construction review of certain new and modified major stationary sources in attainment or unclassifiable areas: CARB's 4/25/2012 submittal of EKAPCD Rule 210.4—Prevention of Significant Deterioration; CARB's 2/23/2012 submittal of ICAPCD Rule 904—Prevention of Significant Deterioration (PSD) Permit Program; CARB's 6/21/2011 submittal of PCAPCD Rule 518—Prevention of Significant Deterioration (PSD) Permit Program; and CARB's 7/3/2012 submittal of YSAQMD Rule 3.24—Prevention of Significant Deterioration.

IV. Statutory and Executive Order Reviews

Under the CAA, the Administrator is required to approve a SIP submission that complies with the provisions of the Act and applicable Federal regulations. 42 U.S.C. 7410(k). Thus, in reviewing SIP submissions, EPA's role is to approve state choices, provided that they meet the criteria of the CAA. Accordingly, this action merely approves state law as meeting Federal requirements and does not impose additional requirements beyond those imposed by state law. For that reason, this action:

- Is not a ''significant regulatory action'' subject to review by the Office of Management and Budget under Executive Order 12866 (58 FR 51735, October 4, 1993);
- Does not impose an information collection burden under the provisions of the Paperwork Reduction Act (44 U.S.C. 3501 et seq.);
- Is certified as not having a significant economic impact on a substantial number of small entities under the Regulatory Flexibility Act (5 U.S.C. 601 et seq.);
- Does not contain any unfunded mandate or significantly or uniquely affect small governments, as described in the Unfunded Mandates Reform Act of 1995 (Pub. L. 104–4);
- Does not have Federalism implications as specified in Executive Order 13132 (64 FR 43255, August 10, 1999);
- Is not an economically significant regulatory action based on health or safety risks subject to Executive Order 13045 (62 FR 19885, April 23, 1997);
- Is not a significant regulatory action subject to Executive Order 13211 (66 FR 28355, May 22, 2001);
- Is not subject to requirements of Section 12(d) of the National Technology Transfer and Advancement Act of 1995 (15 U.S.C. 272 note) because application of those requirements would be inconsistent with the CAA; and
- Does not provide EPA with the discretionary authority to address, as appropriate, disproportionate human health or environmental effects, using practicable and legally permissible methods, under Executive Order 12898 (59 FR 7629, February 16, 1994).

In addition, this proposed rule does not have tribal implications as specified by Executive Order 13175 (65 FR 67249, November 9, 2000), because the SIP is not approved to apply in Indian country located in the State of California and EPA notes that it will not impose substantial direct costs on tribal governments or preempt tribal law.

The Congressional Review Act, 5 U.S.C. 801 *et seq.,* as added by the Small Business Regulatory Enforcement Fairness Act of 1996, generally provides that before a rule may take effect, the agency promulgating the rule must submit a rule report, which includes a copy of the rule, to each House of the Congress and to the Comptroller General of the United States. EPA will submit a report containing this action and other required information to the U.S. Senate, the U.S. House of Representatives, and the Comptroller General of the United States prior to publication of the rule in the **Federal Register**. A major rule cannot take effect until 60 days after it is published in the **Federal Register**. This action is not a ''major rule'' as defined by 5 U.S.C. 804(2).

Under section 307(b)(1) of the CAA, petitions for judicial review of this action must be filed in the United States Court of Appeals for the appropriate circuit by February 8, 2013. Filing a petition for reconsideration by the Administrator of this final rule does not affect the finality of this action for the purposes of judicial review nor does it extend the time within which a petition for judicial review may be filed, and shall not postpone the effectiveness of such rule or action. This action may not be challenged later in proceedings to enforce its requirements. (See CAA section 307(b)(2).)

List of Subjects in 40 CFR Part 52

Environmental protection, Air pollution control, Carbon monoxide, Greenhouse gases, Incorporation by reference, Intergovernmental relations, Lead, Nitrogen dioxide, Ozone, Particulate matter, Reporting and recordkeeping requirements, Sulfur oxides, Volatile organic compounds.

Authority: 42 U.S.C. 7401 *et seq.*

Dated: September 25, 2012.

Jared Blumenfeld,

Regional Administrator, Region IX.

Part 52, chapter I, title 40 of the Code of Federal Regulations is amended as follows:

PART 52—[AMENDED]

■ 1. The authority citation for part 52 continues to read as follows:

Authority: 42 U.S.C. 7401 *et seq.*

Subpart F—California

■ 2. Section 52.220 is amended as follows:

■ a. By revising the introductory text of paragraphs (c)(391) and (c)(411).

■ b. By adding new paragraphs (c)(391)(i)(C), (c)(391)(ii), (c)(411)(i)(E), (c)(411)(ii), (c)(419), and (c)(420).

§ 52.220 Identification of plan.

* * * * *

(c) * * *

(391) New and amended regulations were submitted on June 21, 2011 by the Governor's designee. Final approval of these regulations is based, in part, on the clarifications contained in letters dated July 6, 2012 and August 20, 2012 from the Placer County Air Pollution Control District regarding specific implementation of parts of the Prevention of Significant Deterioration program.

(i) * * *

(C) Placer County Air Pollution Control District.

(*1*) Rule 518, ''Prevention of Significant Deterioration (PSD) Permit Program,'' adopted on February 10, 2011.

(ii) Additional materials.

(A) Placer County Air Pollution Control District (PCAPCD).

(*1*) Letter dated July 6, 2012 from Thomas J. Christofk, PCAPCD, to Gerardo Rios, United States Environmental Protection Agency Region 9, regarding Clarifications of District Rule 518 and 40 CFR 51.166.

(*2*) Letter dated August 20, 2012 from Thomas Christofk, PCAPCD, to Gerardo Rios, United States Environmental Protection Agency Region 9, regarding Clarifications of District Rule 518 and 40 CFR 52.21(k)(2).

* * * * *

(411) New and amended regulations for the following APCDs were submitted on February 23, 2012. Final approval of these regulations is based, in part, on the clarifications contained in letters

dated July 10, 2012 and August 21, 2012 from the Imperial County Air Pollution Control District regarding specific implementation of parts of the Prevention of Significant Deterioration program.

(i) * * *

(E) Imperial County Air Pollution Control District.

(*1*) Rule 904, ''Prevention of Significant Deterioration (PSD) Permit Program,'' revised on December 20, 2011.

(ii) Additional materials.

(A) Imperial County Air Pollution Control District (ICAPCD).

(*1*) Letter dated July 10, 2012 from Brad Poiriez, ICAPCD, to Gerardo Rios, United States Environmental Protection Agency Region 9, regarding Clarifications of District Rule 904 and 40 CFR 51.166.

(*2*) Letter dated August 21, 2012 from Brad Poiriez, ICAPCD, to Gerardo Rios, United States Environmental Protection Agency Region 9, regarding Clarifications of District Rule 904 and 40 CFR 52.21(k)(2).

* * * * *

(419) New and amended regulations for the following APCDs were submitted on April 25, 2012. Final approval of these regulations is based, in part, on the clarifications contained in letters dated July 19, 2012 and August 21, 2012 from the Eastern Kern Air Pollution Control District regarding specific implementation of parts of the Prevention of Significant Deterioration program.

(i) Incorporation by reference.

(A) Eastern Kern Air Pollution Control District.

(*1*) Rule 210.4, ''Prevention of Significant Deterioration,'' adopted on January 12, 2012.

(ii) Additional materials.

(A) Eastern Kern Air Pollution Control District (EKAPCD).

(*1*) Letter dated July 19, 2012 from David L. Jones, EKAPCD, to Gerardo Rios, United States Environmental Protection Agency Region 9, regarding Clarifications of District Rule 210.4 and 40 CFR 51.166.

(*2*) Letter dated August 21, 2012 from David L. Jones, EKAPCD, to Gerardo Rios, United States Environmental Protection Agency Region 9, regarding Clarifications of District Rule 210.4 and 40 CFR 52.21(k)(2).

(420) A new regulation for the following APCD was submitted on July 3, 2012. Final approval of this regulation is based, in part, on the clarifications contained in a letter dated August 7, 2012 from the Yolo-Solano Air Quality Management District regarding specific implementation of parts of the Prevention of Significant Deterioration program.

(i) Incorporation by reference.

(A) Yolo-Solano Air Quality Management District.

(*1*) Rule 3.24, ''Prevention of Significant Deterioration,'' adopted on June 13, 2012.

(ii) Additional materials.

(A) Yolo-Solano Air Quality Management District (YSAQMD).

(*1*) Letter dated August 7, 2012 from Mat Ehrhardt, YSAQMD, to Gerardo Rios, United States Environmental Protection Agency Region 9, regarding Clarifications of District Rule 210.4 and 40 CFR 51.166.

* * * * *

■ 3. Section 52.270 is amended by adding new paragraphs (b)(6), (b)(7), (b)(8), and (b)(9) to read as follows:

§ 52.270 Significant deterioration of air quality.

* * * * *

(b) * * *

(6) The PSD program for the Placer County Air Pollution Control District (PCAPCD), as incorporated by reference in § 52.220(c)(391), is approved under part C, Subpart 1, of the Clean Air Act. For PSD permits previously issued by EPA pursuant to § 52.21 to sources located in the PCAPCD, this approval includes the authority for the PCAPCD to conduct general administration of these existing permits, authority to process and issue any and all subsequent permit actions relating to such permits, and authority to enforce such permits.

(7) The PSD program for the Imperial County Air Pollution Control District, as incorporated by reference in § 52.220(c)(411), is approved under part C, Subpart 1, of the Clean Air Act.

(8) The PSD program for the Eastern Kern Air Pollution Control District (EKAPCD), as incorporated by reference in § 52.220(c)(419), is approved under part C, Subpart 1, of the Clean Air Act. For PSD permits previously issued by EPA pursuant to § 52.21 to sources located in the EKAPCD, this approval includes the authority for the EKAPCD to conduct general administration of these existing permits, authority to process and issue any and all subsequent permit actions relating to such permits, and authority to enforce such permits.

(9) The PSD program for the Yolo-Solano Air Quality Management District, as incorporated by reference in § 52.220(c)(420), is approved under part C, Subpart 1, of the Clean Air Act.

* * * * *

[FR Doc. 2012–29535 Filed 12–7–12; 8:45 am]

BILLING CODE 6560–50–P

ENVIRONMENTAL PROTECTION AGENCY

40 CFR Part 52

[EPA–R09–OAR–2012–0513; FRL–9749–6]

Approval of Air Quality Implementation Plans; California; South Coast Air Quality Management District; Prevention of Significant Deterioration; Greenhouse Gases

AGENCY: Environmental Protection Agency (EPA).

ACTION: Final rule.

SUMMARY: EPA is taking final action under section 110 of the Clean Air Act (CAA) to approve a State Implementation Plan (SIP) revision for the South Coast Air Quality Management District (SCAQMD or District) portion of the California State Implementation Plan (SIP). This SIP revision incorporates District Rule 1714—Prevention of Significant Deterioration for Greenhouse Gases into the California SIP. The submitted revision is a permitting rule that contains the Prevention of Significant Deterioration (PSD) permit program applicable to new and modified major stationary sources of greenhouse gases (GHGs) as required by Part C of title I of the Clean Air Act. In addition, upon the effective date of this action, the District is no longer subject to the Federal Implementation Plan (FIP) at 40 CFR 52.21 as it pertains to GHGs.

DATES: This rule is effective on January 9, 2013.

ADDRESSES: EPA has established docket number EPA–R09–OAR–2012–0513 for this action. Generally, documents in the docket for this action are available electronically at *www.regulations.gov* and in hard copy at EPA Region IX, 75 Hawthorne Street, San Francisco, California. While all documents in the docket are listed at *www.regulations.gov,* some information may be publicly available only at the hard copy location (e.g., copyrighted material, large maps, multi-volume reports), and some may not be publicly available in either location (e.g., CBI). To inspect the hard copy materials, please schedule an appointment during normal business hours with the contact listed in the **FOR FURTHER INFORMATION CONTACT** section.

FOR FURTHER INFORMATION CONTACT: Lisa Beckham, EPA Region IX, 75 Hawthorne Street (AIR–3), San Francisco, CA 94105, phone number (415) 972–3811, or by email at *beckham.lisa@epa.gov.*

SUPPLEMENTARY INFORMATION: Throughout this document, ''we,'' ''us'' and ''our'' refer to EPA.

Table of Contents

I. Summary of Proposed Action
II. Public Comments and EPA Responses
III. What Action is EPA finalizing?
IV. Final Action
V. Statutory and Executive Order Reviews

I. Summary of Proposed Action

On August 29, 2012 (77 FR 52277), EPA proposed to approve the rule listed in Table 1 that was submitted for incorporation into the California SIP.

TABLE 1—SUBMITTED RULE

Local agency	Rule No.	Rule title	Adopted	Submitted
SCAQMD	1714	Prevention of Significant Deterioration for Greenhouse Gases.	11/5/2010	12/30/2010

We proposed to approve this rule because we determined that it complied with the applicable CAA requirements. Our proposed rule and related Technical Support Document (TSD) contain more information on the basis for this rulemaking and our evaluation of the submittal.

II. Public Comments and EPA Responses

EPA's proposed approval action for this SIP revision submittal provided a 30-day public comment period. During this period, we received no comments.

III. What action is EPA finalizing?

EPA is finalizing a SIP revision for the SCAQMD portion of the California SIP. This SIP revision will be codified in 40 CFR 52.220 by incorporating by reference District Rule 1714 listed in Table 1 above. In addition, the letter from the District to EPA dated August 15, 2012 that provides certain clarifications concerning the District's rule, discussed in EPA's proposed rule for this action, will be included as additional material in 40 CFR 52.220. The regulatory text addressing this action also makes it clear that EPA is relying, in part, on the clarifications provided in the District's clarification letter in taking this final approval action. As such, the District's implementation of the PSD program in a manner consistent with these clarifications is a pre-condition of today's final approval of this PSD SIP revision. District Rule 1714 applies only to sources that trigger the PSD program for GHGs. This SIP revision provides a federally approved and enforceable mechanism for the District to issue pre-construction PSD permits for new and modified major stationary sources of GHGs within the District. The regulatory text at 40 CFR 52.270 is also being revised so that the SCAQMD is no longer subject to the FIP for the PSD program as it pertains to GHGs.

For pollutants other than GHGs that trigger the PSD program, the District will continue to administer the PSD program under the criteria and procedures in 40 CFR 52.21, 40 CFR Part 124 (including the opportunity to petition for review by EPA's Environmental Appeals Board), and the applicable PSD delegation agreement.

IV. Final Action

Under CAA sections 110(a), 110(l), and 165 and for the reasons set forth in our August 29, 2012 proposed rule, EPA is approving CARB's December 30, 2010 submittal of District Rule 1714—Prevention of Significant Deterioration for Greenhouse Gases—into the California SIP to establish a PSD permit program for pre-construction review of certain new and modified major stationary sources of greenhouse gases.

V. Statutory and Executive Order Reviews

Under the CAA, the Administrator is required to approve a SIP submission that complies with the provisions of the Act and applicable Federal regulations. 42 U.S.C. 7410(k). Thus, in reviewing SIP submissions, EPA's role is to approve State choices, provided that they meet the criteria of the CAA. Accordingly, this action merely approves State law as meeting Federal requirements and does not impose additional requirements beyond those imposed by State law. For that reason, this action:

- Is not a ''significant regulatory action'' subject to review by the Office of Management and Budget under Executive Order 12866 (58 FR 51735, October 4, 1993);
- Does not impose an information collection burden under the provisions of the Paperwork Reduction Act (44 U.S.C. 3501 et seq.);
- Is certified as not having a significant economic impact on a substantial number of small entities under the Regulatory Flexibility Act (5 U.S.C. 601 et seq.);
- Does not contain any unfunded mandate or significantly or uniquely affect small governments, as described in the Unfunded Mandates Reform Act of 1995 (Pub. L. 104–4);
- Does not have Federalism implications as specified in Executive Order 13132 (64 FR 43255, August 10, 1999);
- Is not an economically significant regulatory action based on health or safety risks subject to Executive Order 13045 (62 FR 19885, April 23, 1997);
- Is not a significant regulatory action subject to Executive Order 13211 (66 FR 28355, May 22, 2001);
- Is not subject to requirements of Section 12(d) of the National Technology Transfer and Advancement Act of 1995 (15 U.S.C. 272 note) because application of those requirements would be inconsistent with the CAA; and
- Does not provide EPA with the discretionary authority to address, as appropriate, disproportionate human health or environmental effects, using practicable and legally permissible methods, under Executive Order 12898 (59 FR 7629, February 16, 1994).

In addition, this final rule does not have tribal implications as specified by Executive Order 13175 (65 FR 67249, November 9, 2000), because the SIP is not approved to apply in Indian country located in the State and EPA notes that it will not impose substantial direct costs on tribal governments or preempt tribal law.

The Congressional Review Act, 5 U.S.C. 801 *et seq.,* as added by the Small Business Regulatory Enforcement Fairness Act of 1996, generally provides that before a rule may take effect, the agency promulgating the rule must submit a rule report, which includes a copy of the rule, to each House of the Congress and to the Comptroller General of the United States. EPA will submit a report containing this action and other required information to the U.S. Senate,

the U.S. House of Representatives, and the Comptroller General of the United States prior to publication of the rule in the **Federal Register**. A major rule cannot take effect until 60 days after it is published in the **Federal Register**. This action is not a ''major rule'' as defined by 5 U.S.C. 804(2).

Under section 307(b)(1) of the CAA, petitions for judicial review of this action must be filed in the United States Court of Appeals for the appropriate circuit by February 8, 2013. Filing a petition for reconsideration by the Administrator of this final rule does not affect the finality of this action for the purposes of judicial review nor does it extend the time within which a petition for judicial review may be filed, and shall not postpone the effectiveness of such rule or action. This action may not be challenged later in proceedings to enforce its requirements. (See CAA section 307(b)(2).)

List of Subjects in 40 CFR Part 52

Air pollution control, Environmental protection, Greenhouse gases, Incorporation by reference, Intergovernmental relations, Reporting and recordkeeping requirements.

Authority: 42 U.S.C. 7401 *et seq.*

Dated: October 22, 2012.

Jared Blumenfeld,

Regional Administrator, Region IX.

Part 52, chapter I, title 40 of the Code of Federal Regulations is amended as follows:

PART 52—APPROVAL AND PROMULGATION OF IMPLEMENTATION PLANS

■ 1. The authority citation for part 52 continues to read as follows:

Authority: 42 U.S.C. 7401 *et seq.*

Subpart F—California

■ 2. Section 52.220 is amended by adding new paragraph (c)(421) to read as follows:

§ 52.220 Identification of plan.

* * * * *

(c) * * *

(421) New regulations were submitted on December 30, 2010, by the Governor's designee. Final approval of this regulation is based, in part, on the clarifications contained in a August 15, 2012 letter from the South Coast Air Quality Management District regarding specific implementation of parts of the Prevention of Significant Deterioration program.

(i) Incorporation by reference.

(A) South Coast Air Quality Management District.

(*1*) Rule 1714, ''Prevention of Significant Deterioration for Greenhouse Gases,'' adopted on November 5, 2010.

(ii) Additional materials.

(A) South Coast Air Quality Management District (SCAQMD).

(*1*) Letter dated August 15, 2012 from Mohsen Nazemi, SCAQMD, to Gerardo Rios, EPA Region 9, regarding Clarifications for Rule 1714—Prevention of Significant Deterioration for Greenhouse Gases.

■ 3. Section 52.270 is amended by adding new paragraph (b)(10) to read as follows:

§ 52.270 Significant deterioration of air quality.

* * * * *

(b) * * *

(10) The PSD program for greenhouse gases (GHGs) in Rule 1714 for the South Coast Air Quality Management District (SCAQMD), as incorporated by reference in § 52.220(c)(421), is approved under part C, Subpart 1, of the Clean Air Act. This approval is limited to sources subject to the PSD program for GHGs. The provisions of § 52.21 (except paragraph (a)(1)) continue to apply to the SCAQMD for all pollutants subject to regulation, as defined in § 52.21, except for GHGs.

* * * * *

[FR Doc. 2012–29528 Filed 12–7–12; 8:45 am]

BILLING CODE 6560–50–P

ENVIRONMENTAL PROTECTION AGENCY

40 CFR Part 52

[EPA–R09–OAR–2012–0808; FRL–9750–4]

Revisions to the California State Implementation Plan, Monterey Bay Unified Air Pollution Control District

AGENCY: Environmental Protection Agency (EPA).

ACTION: Direct final rule.

SUMMARY: EPA is taking direct final action to approve revisions to the Monterey Bay Unified Air Pollution Control District (MBUAPCD) portion of the California State Implementation Plan (SIP). These revisions concern opacity standards related to multiple pollutants, including particulate matter (PM) emissions from several different types of sources, ranging from fugitive dust to gas turbines. We are approving a local rule that regulates these emission sources under the Clean Air Act (CAA or the Act).

DATES: This rule is effective on February 8, 2013 without further notice, unless EPA receives adverse comments by January 9, 2013. If we receive such comments, we will publish a timely withdrawal in the **Federal Register** to notify the public that this direct final rule will not take effect.

ADDRESSES: Submit comments, identified by docket number EPA–R09–OAR–2012–0808, by one of the following methods:

1. *Federal eRulemaking Portal: www.regulations.gov.* Follow the on-line instructions.

2. *Email: steckel.andrew@epa.gov.*

3. *Mail or deliver:* Andrew Steckel (Air-4), U.S. Environmental Protection Agency Region IX, 75 Hawthorne Street, San Francisco, CA 94105–3901.

Instructions: All comments will be included in the public docket without change and may be made available online at *www.regulations.gov,* including any personal information provided, unless the comment includes Confidential Business Information (CBI) or other information whose disclosure is restricted by statute. Information that you consider CBI or otherwise protected should be clearly identified as such and should not be submitted through *www.regulations.gov* or email. *www.regulations.gov* is an ''anonymous access'' system, and EPA will not know your identity or contact information unless you provide it in the body of your comment. If you send email directly to EPA, your email address will be automatically captured and included as part of the public comment. If EPA cannot read your comment due to technical difficulties and cannot contact you for clarification, EPA may not be able to consider your comment. Electronic files should avoid the use of special characters, any form of encryption, and be free of any defects or viruses.

Docket: Generally, documents in the docket for this action are available electronically at *www.regulations.gov* and in hard copy at EPA Region IX, 75 Hawthorne Street, San Francisco, California. While all documents in the docket are listed at *www.regulations.gov,* some information may be publicly available only at the hard copy location (e.g., copyrighted material, large maps), and some may not be publicly available in either location (e.g., CBI). To inspect the hard copy materials, please schedule an appointment during normal business hours with the contact listed in the **FOR FURTHER INFORMATION CONTACT** section.

FOR FURTHER INFORMATION CONTACT: Idalia Pérez, EPA Region IX, (415) 972–3248, *perez.idalia@epa.gov.*

SUPPLEMENTARY INFORMATION: Throughout this document, ''we,'' ''us,'' and ''our'' refer to EPA.

Table of Contents

I. The State's Submittal
A. What rule did the State submit?
B. Are there other versions of this rule?
C. What is the purpose of the submitted rule?
II. EPA's Evaluation and Action
A. How is EPA evaluating the rule?
B. Does the rule meet the evaluation criteria?
C. EPA Recommendations To Further Improve the Rule
D. Public Comment and Final Action
III. Statutory and Executive Order Reviews

I. The State's Submittal

A. What rule did the State submit?

Table 1 lists the rule we are approving with the dates that it was adopted by the local air agency and submitted by the California Air Resources Board (CARB).

TABLE 1—SUBMITTED RULE

Local agency	Rule No.	Rule title	Revised	Submitted
MBUAPCD	400	Visible Emissions	08/15/12	09/20/12

On October 15, 2012, EPA determined that the submittal for MBUAPCD Rule 400 met the completeness criteria in 40 CFR Part 51 Appendix V, which must be met before formal EPA review.

B. Are there other versions of this rule?

We approved an earlier version of Rule 400 into the SIP on August 11, 2005 (70 FR 46770). The MBUAPCD adopted revisions to the SIP-approved version on December 15, 2004 and CARB submitted it to us on March 7, 2008. We disapproved the 12/15/04 version of the rule on June 30, 2010 (75 FR 37727)

C. What is the purpose of the submitted rule?

Particulate matter (PM) contributes to effects that are harmful to human health and the environment, including premature mortality, aggravation of respiratory and cardiovascular disease, decreased lung function, visibility impairment, and damage to vegetation and ecosystems. Section 110(a) of the CAA requires States to submit regulations that control PM and other emissions. Rule 400 limits visible emissions, generally by establishing opacity limits, from a variety of sources including gas turbines and drinking water systems, among others. EPA's technical support document (TSD) has more information about this rule.

II. EPA's Evaluation and Action

A. How is EPA evaluating the rule?

Generally, SIP rules must be enforceable (see section 110(a) of the Act) and must not relax existing requirements (see sections 110(l) and 193). In addition, SIP rules must implement Reasonably Available Control Measures (RACM), including Reasonably Available Control Technology (RACT), in moderate PM nonattainment areas, and Best Available Control Measures (BACM), including Best Available Control Technology (BACT), in serious PM nonattainment areas (see CAA sections 189(a)(1) and 189(b)(1)). The MBUAPCD regulates an area that is in attainment for PM, so Rule 400 is not required to implement RACM or BACM per section 189.

Guidance and policy documents that we use to evaluate Rule 400 include the following:

1. ''Issues Relating to VOC Regulation Cutpoints, Deficiencies, and Deviations; Clarification to Appendix D of November 24, 1987 **Federal Register** Notice,'' (Blue Book), notice of availability published in the May 25, 1988 **Federal Register**.
2. ''Guidance Document for Correcting Common VOC & Other Rule Deficiencies,'' EPA Region 9, August 21, 2001 (the Little Bluebook).
3. ''State Implementation Plans; General Preamble for the Implementation of Title I of the Clean Air Act Amendments of 1990,'' 57 FR 13498 (April 16, 1992); 57 FR 18070 (April 28, 1992).
4. ''State Implementation Plans (SIPs): Policy Regarding Excess Emissions During Malfunctions, Startup and Shutdown'', Memorandum from Steven A. Herman, Assistant Administrator for Enforcement and Compliance Assurance, and Robert Perciasepe, Assistant Administrator for Air and Radiation, September 20, 1999.

B. Does the rule meet the evaluation criteria?

We believe this rule is consistent with the relevant policy and guidance regarding enforceability and SIP relaxations. The TSD has more information on our evaluation.

C. EPA Recommendations To Further Improve the Rule

We do not at this point have additional rule revisions that we recommend for the next time the local agency modifies the rule.

D. Public Comment and Final Action

As authorized in section 110(k)(3) of the Act, EPA is fully approving the submitted rule because we believe it fulfills all relevant requirements. We do not think anyone will object to this approval, so we are finalizing it without proposing it in advance. However, in the Proposed Rules section of this **Federal Register**, we are simultaneously proposing approval of the same submitted rule. If we receive adverse comments by January 9, 2013, we will publish a timely withdrawal in the **Federal Register** to notify the public that the direct final approval will not take effect and we will address the comments in a subsequent final action based on the proposal. If we do not receive timely adverse comments, the direct final approval will be effective without further notice on February 8, 2013. This will incorporate this rule into the federally enforceable SIP.

III. Statutory and Executive Order Reviews

Under the Clean Air Act, the Administrator is required to approve a SIP submission that complies with the provisions of the Act and applicable Federal regulations. 42 U.S.C. 7410(k); 40 CFR 52.02(a). Thus, in reviewing SIP submissions, EPA's role is to approve State choices, provided that they meet the criteria of the Clean Air Act. Accordingly, this action merely approves State law as meeting Federal requirements and does not impose additional requirements beyond those imposed by State law. For that reason, this action:

- Is not a ''significant regulatory action'' subject to review by the Office of Management and Budget under Executive Order 12866 (58 FR 51735, October 4, 1993);
- Does not impose an information collection burden under the provisions of the Paperwork Reduction Act (44 U.S.C. 3501 et seq.);
- Is certified as not having a significant economic impact on a substantial number of small entities under the Regulatory Flexibility Act (5 U.S.C. 601 et seq.);
- Does not contain any unfunded mandate or significantly or uniquely affect small governments, as described in the Unfunded Mandates Reform Act of 1995 (Pub. L. 104–4);

• Does not have Federalism implications as specified in Executive Order 13132 (64 FR 43255, August 10, 1999);

• Is not an economically significant regulatory action based on health or safety risks subject to Executive Order 13045 (62 FR 19885, April 23, 1997);

• Is not a significant regulatory action subject to Executive Order 13211 (66 FR 28355, May 22, 2001);

• Is not subject to requirements of Section 12(d) of the National Technology Transfer and Advancement Act of 1995 (15 U.S.C. 272 note) because application of those requirements would be inconsistent with the Clean Air Act; and

• Does not provide EPA with the discretionary authority to address disproportionate human health or environmental effects with practical, appropriate, and legally permissible methods under Executive Order 12898 (59 FR 7629, February 16, 1994).

In addition, this rule does not have tribal implications as specified by Executive Order 13175 (65 FR 67249, November 9, 2000), because the SIP is not approved to apply in Indian country located in the State, and EPA notes that it will not impose substantial direct costs on tribal governments or preempt tribal law.

The Congressional Review Act, 5 U.S.C. 801 et seq., as added by the Small Business Regulatory Enforcement Fairness Act of 1996, generally provides that before a rule may take effect, the agency promulgating the rule must submit a rule report, which includes a copy of the rule, to each House of the Congress and to the Comptroller General of the United States. EPA will submit a report containing this action and other required information to the U.S. Senate, the U.S. House of Representatives, and the Comptroller General of the United States prior to publication of the rule in the **Federal Register**. A major rule cannot take effect until 60 days after it is published in the **Federal Register**. This action is not a ''major rule'' as defined by 5 U.S.C. 804(2).

Under section 307(b)(1) of the Clean Air Act, petitions for judicial review of this action must be filed in the United States Court of Appeals for the appropriate circuit by February 8, 2013. Filing a petition for reconsideration by the Administrator of this final rule does not affect the finality of this action for the purposes of judicial review nor does it extend the time within which a petition for judicial review may be filed, and shall not postpone the effectiveness of such rule or action. Parties with objections to this direct final rule are encouraged to file a comment in response to the parallel notice of proposed rulemaking for this action published in the Proposed Rules section of today's **Federal Register**, rather than file an immediate petition for judicial review of this direct final rule, so that EPA can withdraw this direct final rule and address the comment in the proposed rulemaking. This action may not be challenged later in proceedings to enforce its requirements (see section 307(b)(2)).

List of Subjects in 40 CFR Part 52

Environmental protection, Air pollution control, Incorporation by reference, Intergovernmental relations, Particulate matter, Reporting and recordkeeping requirements.

Dated: October 26, 2012.

Jared Blumenfeld,

Regional Administrator, Region IX.

Part 52, Chapter I, Title 40 of the Code of Federal Regulations is amended as follows:

PART 52—APPROVAL AND PROMULGATION OF IMPLEMENTATION PLANS

■ 1. The authority citation for part 52 continues to read as follows:

Authority: 42 U.S.C. 7401 *et seq.*

Subpart F—California

■ 2. Section 52.220 is amended by adding paragraph (c)(422) to read as follows:

§ 52.220 Identification of plan.

* * * * *

(c) * * *

(422) Amended regulations for the following APCDs were submitted on September 20, 2012 by the Governor's designee.

(i) *Incorporation by reference.*

(A) Monterey Bay Unified Air Pollution Control District

(*1*) Rule 400, ''Visible Emissions,''amended on August 15, 2012.

[FR Doc. 2012–29532 Filed 12–7–12; 8:45 am]

BILLING CODE 6560–50–P

DEPARTMENT OF HOMELAND SECURITY

Federal Emergency Management Agency

44 CFR Part 67

[Docket ID FEMA–2012–0003]

Final Flood Elevation Determinations

AGENCY: Federal Emergency Management Agency, DHS.

ACTION: Final rule.

SUMMARY: Base (1% annual-chance) Flood Elevations (BFEs) and modified BFEs are made final for the communities listed below. The BFEs and modified BFEs are the basis for the floodplain management measures that each community is required either to adopt or to show evidence of being already in effect in order to qualify or remain qualified for participation in the National Flood Insurance Program (NFIP).

DATES: The date of issuance of the Flood Insurance Rate Map (FIRM) showing BFEs and modified BFEs for each community. This date may be obtained by contacting the office where the maps are available for inspection as indicated in the table below.

ADDRESSES: The final BFEs for each community are available for inspection at the office of the Chief Executive Officer of each community. The respective addresses are listed in the table below.

FOR FURTHER INFORMATION CONTACT: Luis Rodriguez, Chief, Engineering Management Branch, Federal Insurance and Mitigation Administration, Federal Emergency Management Agency, 500 C Street SW., Washington, DC 20472, (202) 646–4064, or (email) *Luis.Rodriguez3@fema.dhs.gov.*

SUPPLEMENTARY INFORMATION: The Federal Emergency Management Agency (FEMA) makes the final determinations listed below for the modified BFEs for each community listed. These modified elevations have been published in newspapers of local circulation and ninety (90) days have elapsed since that publication. The Deputy Associate Administrator for Mitigation has resolved any appeals resulting from this notification.

This final rule is issued in accordance with section 110 of the Flood Disaster Protection Act of 1973, 42 U.S.C. 4104, and 44 CFR part 67. FEMA has developed criteria for floodplain management in floodprone areas in accordance with 44 CFR part 60.

Interested lessees and owners of real property are encouraged to review the proof Flood Insurance Study and FIRM available at the address cited below for each community. The BFEs and modified BFEs are made final in the communities listed below. Elevations at selected locations in each community are shown.

National Environmental Policy Act. This final rule is categorically excluded from the requirements of 44 CFR part 10, Environmental Consideration. An environmental impact assessment has not been prepared.

Regulatory Flexibility Act. As flood elevation determinations are not within the scope of the Regulatory Flexibility Act, 5 U.S.C. 601–612, a regulatory flexibility analysis is not required.

Regulatory Classification. This final rule is not a significant regulatory action under the criteria of section 3(f) of Executive Order 12866 of September 30, 1993, Regulatory Planning and Review, 58 FR 51735.

Executive Order 13132, Federalism. This final rule involves no policies that have federalism implications under Executive Order 13132.

Executive Order 12988, Civil Justice Reform. This final rule meets the applicable standards of Executive Order 12988.

List of Subjects in 44 CFR Part 67

Administrative practice and procedure, Flood insurance, Reporting and recordkeeping requirements.

Accordingly, 44 CFR part 67 is amended as follows:

PART 67—[AMENDED]

■ 1. The authority citation for part 67 continues to read as follows:

Authority: 42 U.S.C. 4001 *et seq.;* Reorganization Plan No. 3 of 1978, 3 CFR, 1978 Comp., p. 329; E.O. 12127, 44 FR 19367, 3 CFR, 1979 Comp., p. 376.

§ 67.11 [Amended]

■ 2. The tables published under the authority of § 67.11 are amended as follows:

State	City/town/county	Source of flooding	Location	* Elevation in feet (NGVD) + Elevation in feet (NAVD) # Depth in feet above ground ∧ Elevation in meters (MSL) modified
Unincorporated Areas of Mono County, California Docket No.: FEMA–B–1233				
California	Unincorporated Areas of Mono County.	Blind Spring Valley	At the Spring Canyon Creek Benton confluence.	+5354
			Approximately 4.3 miles upstream of the Spring Canyon Creek Benton confluence.	+5738
California	Unincorporated Areas of Mono County.	Shallow flooding	Approximately 2.3 miles southeast of the intersection of White Mountain Ranch Road and State Route 6.	#1
California	Unincorporated Areas of Mono County.	Shallow flooding	Approximately 2.7 miles southeast of the intersection of White Mountain Ranch Road and State Route 6.	#2
California	Unincorporated Areas of Mono County.	Shallow flooding	Approximately 3.0 miles northeast of the intersection of Goolsby Ranch Road and State Route 6.	#1
California	Unincorporated Areas of Mono County.	Shallow flooding	Approximately 2.9 miles northeast of the intersection of Chidago Way and Piute Lane.	#1
California	Unincorporated Areas of Mono County.	Shallow flooding	Approximately 2.9 miles southeast of the intersection of White Mountain Ranch Road and State Route 6.	#3
California	Unincorporated Areas of Mono County.	Spring Canyon Creek Benton.	Approximately 3.4 miles downstream of Goolsby Ranch Road.	+5226
			Approximately 1.3 miles upstream of Snipes Ranch Road.	+5483
California	Unincorporated Areas of Mono County.	Spring Canyon Creek Chalfant.	Approximately 3.1 miles upstream of the Inyo County boundary.	+4233
			Approximately 7.8 miles upstream of the Inyo County boundary.	+4366
California	Unincorporated Areas of Mono County.	Spring Canyon Creek Hammil.	Approximately 3.1 miles downstream of the Willow Creek Aqueduct.	+4531
			Approximately 0.5 mile upstream of State Route 6.	+4722

* National Geodetic Vertical Datum.
+ North American Vertical Datum.
# Depth in feet above ground.
∧ Mean Sea Level, rounded to the nearest 0.1 meter.

State	City/town/county	Source of flooding	Location	* Elevation in feet (NGVD) + Elevation in feet (NAVD) # Depth in feet above ground ∧ Elevation in meters (MSL) modified

ADDRESSES

Unincorporated Areas of Mono County

Maps are available for inspection at the Mono County Department of Public Works, 74 North School Street, Bridgeport, CA 93517.

Unincorporated Areas of Tulare County, California
Docket No.: FEMA–B–1230

California	Unincorporated Areas of Tulare County.	Lake Kaweah	Entire shoreline	+722
California	Unincorporated Areas of Tulare County.	Middle Fork Kaweah River	Approximately 1.0 mile downstream of the South Fork Kaweah River confluence.	+722
			Approximately 0.5 mile downstream of the South Fork Kaweah River confluence.	+722

* National Geodetic Vertical Datum.
+ North American Vertical Datum.
# Depth in feet above ground.
∧ Mean Sea Level, rounded to the nearest 0.1 meter.

ADDRESSES

Unincorporated Areas of Tulare County

Maps are available for inspection at the Tulare County Planning Division, 411 East Kern Avenue, Tulare, CA 93274.

Flooding source(s)	Location of referenced elevation	* Elevation in feet (NGVD) + Elevation in feet (NAVD) # Depth in feet above ground ∧ Elevation in meters (MSL) modified	Communities affected

Lawrence County, Arkansas, and Incorporated Areas
Docket No.: FEMA–B–1204

Turkey Creek	Approximately 1.2 miles downstream of Southwest Broad Street.	+261	Unincorporated Areas of Lawrence County.
	Approximately 0.5 mile downstream of Southwest Broad Street.	+263	
Village Creek	Approximately 1.2 miles downstream of West Free Street	+262	City of Walnut Ridge, Unincorporated Areas of Lawrence County.
	Approximately 0.5 mile upstream of U.S. Route 67	+267	

* National Geodetic Vertical Datum.
+ North American Vertical Datum.
# Depth in feet above ground.
∧ Mean Sea Level, rounded to the nearest 0.1 meter.

ADDRESSES

City of Walnut Ridge

Maps are available for inspection at the Fire Department, 3227 U.S. Route 67B, Walnut Ridge, AR 72476.

Unincorporated Areas of Lawrence County

Maps are available for inspection at the Lawrence County Recorder's Office, 315 West Main Street, Room 12, Walnut Ridge, AR 72476.

Boulder County, Colorado, and Incorporated Areas
Docket No.: FEMA–B–1131

55th Street Split Flow	Approximately 350 feet upstream of Burlington Northern and Sante Fe Railroad.	+5222	City of Boulder, Unincorporated Areas of Boulder County.
	Just downstream of South Boulder Road	+5345	

Flooding source(s)	Location of referenced elevation	* Elevation in feet (NGVD) + Elevation in feet (NAVD) # Depth in feet above ground ∧ Elevation in meters (MSL) modified	Communities affected
Dry Creek Ditch No. 2	Approximately 800 feet upstream of the confluence with South Boulder Creek.	+5192	City of Boulder, Unincorporated Areas of Boulder County.
	At Arapahoe Avenue	+5234	
South Boulder Creek	At the confluence with Boulder Creek	+5175	City of Boulder, Unincorporated Areas of Boulder County.
	Approximately 770 feet upstream of Eldorado Springs Road.	+5820	
West Valley Split Flow	Approximately 200 feet upstream of Burlington Northern and Santa Fe Railroad.	+5226	City of Boulder, Unincorporated Areas of Boulder County.
	Just downstream of Apache Road	+5345	

* National Geodetic Vertical Datum.
+ North American Vertical Datum.
# Depth in feet above ground.
∧ Mean Sea Level, rounded to the nearest 0.1 meter.

ADDRESSES

City of Boulder
Maps are available for inspection at 1739 Broadway Street, Boulder, CO 80306.

Unincorporated Areas of Boulder County
Maps are available for inspection at 1739 Broadway Street, Boulder, CO 80306.

Lake County, Florida, and Incorporated Areas
Docket No.: FEMA–B–1208

Leesburg Tributary 1	Approximately 1,225 feet downstream of the Flying Baron Estates Airport Runway.	+64	City of Leesburg, Unincorporated Areas of Lake County.
	At the downstream side of State Route 44	+81	
Leesburg Tributary 2	Approximately 960 feet downstream of Youngs Road	+66	City of Leesburg, Unincorporated Areas of Lake County.
	Approximately 105 feet upstream of West Main Street	+83	
Leesburg Tributary 2–1	At the Leesburg Tributary 2 confluence	+78	City of Leesburg, Unincorporated Areas of Lake County.
	Approximately 1,410 feet upstream of the Leesburg Tributary 2 confluence.	+78	
Leesburg Tributary 3	Approximately 1,550 feet downstream of Youngs Road	+65	City of Leesburg, Unincorporated Areas of Lake County.
	Approximately 325 feet upstream of Youngs Road	+76	
Multiple Ponding Areas	Area bound by Violet Avenue to the north, Royal Trails Road to the east, and Maggie Jones Road to the south and west.	+42	Unincorporated Areas of Lake County.
Multiple Ponding Areas	Area bound by Pandorea Avenue to the north, Greenbrier Street to the east, State Route 44 to the south, and Harbor Way to the west.	+42	Unincorporated Areas of Lake County.
Multiple Ponding Areas	Area bound by County Route 42 to the north, State Route 44 to the east and south, and County Route 439 to the west.	+43	Unincorporated Areas of Lake County.
Multiple Ponding Areas	Area bound by Alder Avenue to the north, Beach Road to the east, Poinciana Street to the south, and Royal Trails Road to the west.	+44	Unincorporated Areas of Lake County.
Multiple Ponding Areas	Area bound by Poinciana Street to the north and east, and Royal Trails Road to the south and west.	+44	Unincorporated Areas of Lake County.
Multiple Ponding Areas	Area bound by Clover Avenue to the north, Wildflower Way to the east, State Route 44 to the south, and Sunflower Street to the west.	+44	Unincorporated Areas of Lake County.
Multiple Ponding Areas	Area bound by Royal Trails Road to the north and east, Poinciana Street to the south, and Tamarac Street to the west.	+44	Unincorporated Areas of Lake County.

Flooding source(s)	Location of referenced elevation	* Elevation in feet (NGVD) + Elevation in feet (NAVD) # Depth in feet above ground ∧ Elevation in meters (MSL) modified	Communities affected
Multiple Ponding Areas	Area bound by Maggie Jones Road to the north, Royal Trails Road to the east, State Route 44 to the south, and Lake Norris Road to the west.	+45	Unincorporated Areas of Lake County.
Multiple Ponding Areas	Area bound by Division Street to the north, State Route 44 to the east and south, and Aspen Street to the west.	+45	Unincorporated Areas of Lake County.
Multiple Ponding Areas	Area approximately 665 feet northeast of the intersection of Royal Trails Road and Maggie Jones Road, bound by West Thyme Avenue to the north, Poinciana Street to the east, Red Oak Avenue to the south, and Royal Trails Road to the west.	+45	Unincorporated Areas of Lake County.
Multiple Ponding Areas	Area bound by Saffron Avenue to the north, State Route 44 to the east, and Royal Trails Road to the south and west.	+45	Unincorporated Areas of Lake County.
Multiple Ponding Areas	Area bound by Sawgrass Fill Road to the north, Royal Trails Road to the east, State Route 44 to the south, and Harbor Way to the west.	+46	Unincorporated Areas of Lake County.
Multiple Ponding Areas	Area bound by Hawthorn Avenue to the north, Alder Way to the east, and Poinciana Street to the south and west.	+46	Unincorporated Areas of Lake County.
Multiple Ponding Areas	Area bound by Apricot Avenue to the north, Fir Street to the east, Quince Avenue to the south, and Royal Trails Road to the west.	+46	Unincorporated Areas of Lake County.
Multiple Ponding Areas	Area bound by Tamarac Street to the north and west, Royal Trails Road to the east, and Violet Avenue to the south.	+46	Unincorporated Areas of Lake County.
Multiple Ponding Areas	Area bound by Royal Trails Road to the north and west, Viola Way to the east, and West Thyme Avenue to the south.	+46	Unincorporated Areas of Lake County.
Multiple Ponding Areas	Area bound by West Thyme Avenue to the north, Poinciana Street to the east, Hemlock Lane to the south, and Royal Trails Road to the west.	+46	Unincorporated Areas of Lake County.
Multiple Ponding Areas	Area bound by Bears Lane to the north, Flag Street to the east, Red Oak Avenue to the south, and Jericho Trail to the west.	+47	Unincorporated Areas of Lake County.
Multiple Ponding Areas	Area bound by West Thyme Avenue to the north, Poinciana Street to the east, and Maggie Jones Road to the south and west.	+47	Unincorporated Areas of Lake County.
Multiple Ponding Areas	Area approximately 0.4 mile northeast of the intersection of Royal Trails Road and Maggie Jones Road, bound by West Thyme Avenue to the north, Poinciana Street to the east, Red Oak Avenue to the south, and Royal Trails Road to the west.	+47	Unincorporated Areas of Lake County.
Multiple Ponding Areas	Area approximately 90 feet southeast of the intersection of Royal Trails Road and West Thyme Avenue, bound by West Thyme Avenue to the north, West Thyme Court to the east, Daffodil Avenue to the south, and Royal Trails Road to the west.	+47	Unincorporated Areas of Lake County.
Multiple Ponding Areas	Area bound by Quince Avenue to the north, Cashew Street to the east, Poinciana Street to the south, and Tamarac Street to the west.	+47	Unincorporated Areas of Lake County.
Multiple Ponding Areas	Area bound by Chinaberry Street to the north, Aspen Street to the east, Alder Avenue to the south, and Poinciana Street to the west.	+48	Unincorporated Areas of Lake County.
Multiple Ponding Areas	Area bound by Fullerville Road to the north, Cooter Pond Road to the east, Quince Avenue to the south, and Buck Run Drive to the west.	+48	Unincorporated Areas of Lake County.
Multiple Ponding Areas	Area bound by Quince Avenue to the north, Chinaberry Street to the east and south, and Royal Trails Road to the west.	+48	Unincorporated Areas of Lake County.
Multiple Ponding Areas	Area bound by Saffron Avenue to the north, Mango Street to the east, West Thyme Avenue to the south, and Royal Trails Road to the west.	+48	Unincorporated Areas of Lake County.
Multiple Ponding Areas	Area bound by Seagrape Avenue to the north, Apricot Avenue to the east and south, and Honeysuckle Street to the west.	+49	Unincorporated Areas of Lake County.

Flooding source(s)	Location of referenced elevation	* Elevation in feet (NGVD) + Elevation in feet (NAVD) # Depth in feet above ground ∧ Elevation in meters (MSL) modified	Communities affected
Multiple Ponding Areas	Area bound by Saffron Avenue to the north, Chinaberry Street to the east and south, and Royal Trails Road to the west.	+49	Unincorporated Areas of Lake County.
Multiple Ponding Areas	Area bound by Saffron Avenue to the north, Mango Street to the east, Alder Avenue to the south, and Poinciana Street to the west.	+49	Unincorporated Areas of Lake County.
Multiple Ponding Areas	Area bound by West Thyme Avenue to the north, Aspen Street to the east, Red Oak Avenue to the south, and Royal Trails Road to the west.	+49	Unincorporated Areas of Lake County.
Multiple Ponding Areas	Area bound by East Thyme Avenue to the north, Aspen Street to the east, Alder Avenue to the south, and Poinciana Street to the west.	+49	Unincorporated Areas of Lake County.
Multiple Ponding Areas	Area bound by Almond Tree Lane to the north, Aspen Street to the east, East Thyme Avenue to the south, and Datura Street to the west.	+50	Unincorporated Areas of Lake County.
Multiple Ponding Areas	Area bound by Quince Avenue to the north, Chinaberry Street to the east, Kumquat Avenue to the south, and Cashew Street to the west.	+50	Unincorporated Areas of Lake County.
Multiple Ponding Areas	Area bound by Quince Avenue to the north, West Lake Road to the east, Chinaberry Street to the south, and Cashew Street to the west.	+53	Unincorporated Areas of Lake County.
Ponding Area	Area bound by Royal Trails Road to the north and east, Tamarac Street to the south, and Maggie Jones Road to the west.	+38	Unincorporated Areas of Lake County.
Ponding Area	Area approximately 575 feet southwest of the intersection of Tamarac Street and Violet Avenue, bound by Fullerville Road to the north, Royal Trails Road to the east, and Maggie Jones Road to the south and west.	+39	Unincorporated Areas of Lake County.
Ponding Area	Area approximately 470 feet southwest of the intersection of Tamarac Street and Violet Avenue, bound by Fullerville Road to the north, Royal Trails Road to the east, and Maggie Jones Road to the south and west.	+40	Unincorporated Areas of Lake County.
Ponding Area	Area bound by Royal Trails Road to the north and east, Saffron Avenue to the south, and Maggie Jones Road to the west.	+41	Unincorporated Areas of Lake County.
Ponding Area	Area approximately 340 feet southwest of the intersection of Tamarac Street and Violet Avenue, bound by Fullerville Road to the north, Royal Trails Road to the east, and Maggie Jones Road to the south and west.	+41	Unincorporated Areas of Lake County.
Ponding Area	Area bound by Poinciana Street to the north and west, Holly Branch Road to the east, and Steward Road to the south.	+41	Unincorporated Areas of Lake County.
Ponding Area	Area bound by Pandorea Avenue to the north, Clover Street to the east, State Route 44 to the south, and Lantana Street to the west.	+43	Unincorporated Areas of Lake County.
Ponding Area	Area bound by Larkspur Avenue to the north, State Route 44 to the east and south, and Rabanal Trail to the west.	+43	Unincorporated Areas of Lake County.
Ponding Area	Area bound by Rory Lane to the north, State Route 44 to the east and south, and Poinciana Street to the west.	+44	Unincorporated Areas of Lake County.
Ponding Area	Area bound by Maggie Jones Road to the north, Royal Trails Road to the east, Red Oak Avenue to the south, and Back Forty Road to the west.	+44	Unincorporated Areas of Lake County.
Ponding Area	Area bound by Tamarac Street to the north, Violet Avenue to the east, Royal Trails Road to the south, and Maggie Jones Road to the west.	+44	Unincorporated Areas of Lake County.
Ponding Area	Area bound by Royal Trails Road to the north and east, State Route 44 to the south, and Wildflower Way to the west.	+45	Unincorporated Areas of Lake County.
Ponding Area	Area bound by Cinnamon Avenue to the north, Fir Street to the east, and Royal Trails Road to the south and west.	+45	Unincorporated Areas of Lake County.
Ponding Area	Area bound by Saffron Avenue to the north, Royal Trails Road to the east, Poinciana Street to the south, and Tamarac Street to the west.	+45	Unincorporated Areas of Lake County.

Flooding source(s)	Location of referenced elevation	* Elevation in feet (NGVD) + Elevation in feet (NAVD) # Depth in feet above ground ∧ Elevation in meters (MSL) modified	Communities affected
Ponding Area	Area bound by Ixora Avenue to the north, Bamboo Street to the east, Lupine Avenue to the south, and Windward Avenue to the west.	+46	Unincorporated Areas of Lake County.
Ponding Area	Area bound by Yucca Avenue to the north, Jericho Trail to the east, Pandorea Avenue to the south, and Windward Avenue to the west.	+46	Unincorporated Areas of Lake County.
Ponding Area	Area bound by Primrose Lane to the north, Poinciana Street to the east, Red Oak Avenue to the south, and Royal Trails Road to the west.	+46	Unincorporated Areas of Lake County.
Ponding Area	Area bound by Red Oak Avenue to the north and east, and Royal Trails Road to the south and west.	+46	Unincorporated Areas of Lake County.
Ponding Area	Area bound by Red Oak Avenue to the north, Pandorea Avenue to the east and south, and Jericho Trail to the west.	+46	Unincorporated Areas of Lake County.
Ponding Area	Area bound by West Veronica Avenue to the north, Apple Street to the east, Alder Avenue to the south, and Alder Court to the west.	+46	Unincorporated Areas of Lake County.
Ponding Area	Area bound by Aster Court to the north and west, Royal Trails Road to the east, and Redgum Court to the south.	+46	Unincorporated Areas of Lake County.
Ponding Area	Area bound by Division Street to the north, Dahlia Street to the east, Nutmeg Avenue to the south, and Abele Street to the west.	+46	Unincorporated Areas of Lake County.
Ponding Area	Area bound by Coconut Avenue to the north, Wildflower Way to the east, State Route 44 to the south, and Sunflower Street to the west.	+47	Unincorporated Areas of Lake County.
Ponding Area	Area approximately 1,025 feet southeast of the intersection of Royal Trails Road and Greenbrier Street, bound by Royal Trails Road to the north and east, Wildflower Way to the south, and Greenbrier Street to the west.	+47	Unincorporated Areas of Lake County.
Ponding Area	Area bound by Hemlock Lane to the north, Poinciana Street to the east, Primrose Lane to the south, and Royal Trails Road to the west.	+47	Unincorporated Areas of Lake County.
Ponding Area	Area bound by Hawthorn Avenue to the north, Alder Way to the east, Alder Avenue to the south, and Poinciana Street to the west.	+47	Unincorporated Areas of Lake County.
Ponding Area	Area bound by Chinaberry Street to the north, Persimmon Street to the east, Hawthorn Avenue to the south, and Poinciana Street to the west.	+47	Unincorporated Areas of Lake County.
Ponding Area	Area bound by East Veronica Avenue to the north, Rabanal Trail to the east, Scrub Oak Lane to the south, and Poinciana Street to the west.	+47	Unincorporated Areas of Lake County.
Ponding Area	Area approximately 580 feet southeast of the intersection of Royal Trails Road and Greenbrier Street, bound by Royal Trails Road to the north and east, Wildflower Way to the south, and Greenbrier Street to the west.	+48	Unincorporated Areas of Lake County.
Ponding Area	Area approximately 370 feet southeast of the intersection of Royal Trails Road and West Thyme Avenue, bound by West Thyme Avenue to the north, West Thyme Court to the east, Daffodil Avenue to the south, and Royal Trails Road to the west.	+48	Unincorporated Areas of Lake County.
Ponding Area	Area bound by Saffron Avenue to the north, West Saffron Court to the east, Poinciana Street to the south, and Royal Trails Road to the west.	+48	Unincorporated Areas of Lake County.
Ponding Area	Area bound by Poinciana Street to the north and east, Viola Way to the south, and Royal Trails Road to the west.	+49	Unincorporated Areas of Lake County.
Ponding Area	Area bound by Fullerville Road to the north, Jewell Drive to the east, Seagrape Avenue to the south, and Redlands Drive to the west.	+49	Unincorporated Areas of Lake County.
Ponding Area	Area bound by Fullerville Road to the north, Bear Lake Boulevard to the east, Seagrape Avenue to the south, and Buck Run Drive to the west.	+49	Unincorporated Areas of Lake County.
Ponding Area	Area bound by Saffron Avenue to the north, West Saffron Court to the west, Vitex Avenue to the south, and Royal Trails Road to the west.	+49	Unincorporated Areas of Lake County.

Flooding source(s)	Location of referenced elevation	* Elevation in feet (NGVD) + Elevation in feet (NAVD) # Depth in feet above ground ∧ Elevation in meters (MSL) modified	Communities affected
Ponding Area	Area bound by Eddy Lane to the north, Cassia Street to the east, Nutmeg Avenue to the south, and Aspen Street to the west.	+49	Unincorporated Areas of Lake County.
Ponding Area	Area bound by Vitex Avenue to the north, Aspen Street to the east, West Thyme Avenue to the south, and Poinciana Street to the west.	+50	Unincorporated Areas of Lake County.
Ponding Area	Area bound by Kumquat Avenue to the north, Chinaberry Street to the east and south, and Cashew Street to the west.	+50	Unincorporated Areas of Lake County.
Ponding Area	Area bound by Seagrape Avenue to the north, Jewell Drive to the east, Tulip Avenue to the south, and Apricot Avenue to the west.	+50	Unincorporated Areas of Lake County.
Ponding Area	Area bound by East Veronica Avenue to the north, Aspen Street to the east, Alder Avenue to the south, and Balsam Street to the west.	+51	Unincorporated Areas of Lake County.
Ponding Area	Area bound by East Thyme Avenue to the north, Rabanal Trail to the east, East Veronica Avenue to the south, and Aspen Street to the west.	+51	Unincorporated Areas of Lake County.
Ponding Area	Area bound by Verano Drive to the north, Jewell Drive to the east, Buck Lake Road to the south, and Apricot Avenue to the west.	+51	Unincorporated Areas of Lake County.
Ponding Area	Area bound by Buck Lake Road to the north, Saint Claire Lake Drive to the east and south, and Chinaberry Street to the west.	+51	Unincorporated Areas of Lake County.
Ponding Area	Area bound by Seagrape Avenue to the north, Fir Street to the east, Quince Avenue to the south, and Royal Trails Road to the west.	+51	Unincorporated Areas of Lake County.
Ponding Area	Area bound by Vitex Avenue to the north, Shady Rose Court to the east, West Thyme Avenue to the south, and Poinciana Street to the west.	+52	Unincorporated Areas of Lake County.
Ponding Area	Area bound by Chinaberry Street to the north, Ash Avenue to the east, East Thyme Avenue to the south, and Kumquat Avenue to the west.	+52	Unincorporated Areas of Lake County.
Ponding Area	Area bound by Nutmeg Avenue to the north, Dahlia Street to the east, East Thyme Avenue to the south, and Aspen Street to the west.	+52	Unincorporated Areas of Lake County.
Ponding Area	Area bound by Saffron Avenue to the north, West Lake Road to the east, East Thyme Avenue to the south, and Chinaberry Street to the west.	+54	Unincorporated Areas of Lake County.
Ponding Area	Area bound by Nutmeg Avenue to the north, Locust Street to the east, Larkspur Avenue to the south, and Dahlia Street to the west.	+54	Unincorporated Areas of Lake County.
Ponding Area	Area bound by Quince Avenue to the north, Saint Claire Lake Drive to the east, Saffron Avenue to the south, and Chinaberry Street to the west.	+55	Unincorporated Areas of Lake County.
Ponding Area	Area bound by Tulip Avenue to the north, Saint Claire Lake Drive to the east, Quince Avenue to the south, and Chinaberry Street to the west.	+56	Unincorporated Areas of Lake County.
Ponding Area D2L	Area bound by South Old Dixie Highway to the north and east, Shiloh Avenue to the south, and Arlington Avenue to the west.	+74	Town of Lady Lake.
St. Johns River	Approximately 2.1 miles upstream of State Route 40	+7	Unincorporated Areas of Lake County.
	Approximately 2.6 miles upstream of State Route 44	+7	
Vista Lake	Entire shoreline within community	+106	Unincorporated Areas of Lake County.
Wolf Branch	Approximately 0.9 mile downstream of Wolf Branch Road	+83	City of Mount Dora, Unincorporated Areas of Lake County.
	Approximately 645 feet upstream of Country Club Boulevard.	+168	

* National Geodetic Vertical Datum.
+ North American Vertical Datum.
# Depth in feet above ground.
∧ Mean Sea Level, rounded to the nearest 0.1 meter.

Flooding source(s)	Location of referenced elevation	* Elevation in feet (NGVD) + Elevation in feet (NAVD) # Depth in feet above ground ∧ Elevation in meters (MSL) modified	Communities affected

ADDRESSES

City of Leesburg
Maps are available for inspection at the Public Works Department, 550 South 14th Street, Leesburg, FL 34748.

City of Mount Dora
Maps are available for inspection at the Building and Zoning Department, 510 North Baker Street, Mount Dora, FL 32757.

Town of Lady Lake
Maps are available for inspection at the Town Hall, 409 Fennell Boulevard, Lady Lake, FL 32159.

Unincorporated Areas of Lake County
Maps are available for inspection at the Lake County Public Works Department, 437 Ardice Avenue, Eustis, FL 32726.

Sevier County, Utah, and Incorporated Areas
Docket No.: FEMA–B–1188

Albinus Canyon	Approximately 400 feet downstream of Old U.S. Highway 89.	+5343	Unincorporated Areas of Sevier County.
	Approximately 500 feet upstream of I–70	+5445	
East Koosharem Creek	Approximately 1,800 feet downstream of West 200 South Street.	+6870	Town of Koosharem, Unincorporated Areas of Sevier County.
	Approximately 500 feet upstream of North 300 West Street.	+6975	
Indian Creek	Approximately 500 feet downstream of East 300 North Street.	+5416	Town of Joseph.
	At the downstream side of I–70	+5504	
Indian Creek Split Flow	Approximately 400 feet downstream of State Highway 118	+5435	Town of Joseph.
	At the Indian Creek divergence	+5485	
Koosharem Creek	Approximately 1,700 feet downstream of West 200 South Street.	+6878	Town of Koosharem, Unincorporated Areas of Sevier County.
	Approximately 0.4 mile upstream of West 200 North Street.	+7037	
North Koosharem Creek	Approximately 700 feet downstream of North 200 East Street.	+6893	Town of Koosharem, Unincorporated Areas of Sevier County.
	Approximately 1,800 feet upstream of North 300 West Street.	+7033	

* National Geodetic Vertical Datum.
+ North American Vertical Datum.
# Depth in feet above ground.
∧ Mean Sea Level, rounded to the nearest 0.1 meter.

ADDRESSES

Town of Joseph
Maps are available for inspection at 25 East 100 North Street, Joseph, UT 84739.

Town of Koosharem
Maps are available for inspection at 45 North Main Street, Koosharem, UT 84744.

Unincorporated Areas of Sevier County
Maps are available for inspection at 250 North Main Street, Richfield, UT 84701.

Chesterfield County, Virginia, and Incorporated Areas
Docket Nos.: FEMA–B–1097 and FEMA–B–1230

Appomattox River	Approximately 0.9 mile upstream of the confluence with Swift Creek.	*9	Unincorporated Areas of Chesterfield County.
	At the Chesterfield County/City of Colonial Heights/City of Petersburg boundary.	*20	
Blackman Creek	At the confluence with Deep Creek and Horsepen Creek	*197	Unincorporated Areas of Chesterfield County.
	Approximately 3.7 miles upstream of Otterdale Road (State Route 667).	*287	
Crooked Branch	On the upstream side of State Highway 288	*131	Unincorporated Areas of Chesterfield County.
	At the upstream side of Hollyberry Drive	*170	

Flooding source(s)	Location of referenced elevation	* Elevation in feet (NGVD) + Elevation in feet (NAVD) # Depth in feet above ground ∧ Elevation in meters (MSL) modified	Communities affected
Deep Creek	At the confluence with the Swift Creek Reservoir	*182	Unincorporated Areas of Chesterfield County.
	At the confluence with Blackman Creek and Horsepen Creek.	*197	
Dry Creek	At the upstream side of Hull Street (U.S. Route 360 Westbound).	* 185	Unincorporated Areas of Chesterfield County.
	Approximately 0.5 mile upstream of Hull Street (U.S. Route 360 Westbound).	*185	
Fuqua Branch	At the confluence with Dry Creek	*185	Unincorporated Areas of Chesterfield County.
	Approximately 2.2 miles upstream of the Ashbrook Lake Dam.	*261	
Great Branch	Approximately 500 feet upstream of Hamlin Creek Parkway.	*103	Unincorporated Areas of Chesterfield County.
	Approximately 250 feet downstream of Chalkley Road	*141	
Great Branch (downstream)	At the Proctors Creek confluence	*91	Unincorporated Areas of Chesterfield County.
	Approximately 500 feet upstream of Hamlin Creek Parkway.	*103	
Great Branch (upstream)	Approximately 250 feet downstream of Chalkey Road	*141	Unincorporated Areas of Chesterfield County.
	Approximately 1,450 feet upstream of Chalkey Road	*146	
Great Branch Tributary	At the confluence with Great Branch	*129	Unincorporated Areas of Chesterfield County.
	Approximately 1,000 feet downstream of Ecoff Avenue	*129	
Horsepen Creek	At the confluence with Blackman Creek and Deep Creek	*197	Unincorporated Areas of Chesterfield County.
	Approximately 3.0 miles upstream of the confluence with Blackman Creek and Deep Creek.	*257	
Johnson Creek	At the downstream side of Allied Road (State Route 287)	*8	Unincorporated Areas of Chesterfield County.
	Approximately 0.8 mile upstream of Old Bermuda Hundred Road.	*128	
Johnson Creek Tributary	At the Johnson Creek confluence	*55	Unincorporated Areas of Chesterfield County.
	Approximately 100 feet upstream of Bermuda Hundred Road.	*63	
Lake Chesdin	Entire shoreline in Chesterfield County	*163	Unincorporated Areas of Chesterfield County.
Little Tomahawk Creek	At the confluence with the Swift Creek Reservoir	*184	Unincorporated Areas of Chesterfield County.
	Approximately 1,800 feet upstream of the confluence with the Swift Creek Reservoir.	*184	
Proctors Creek	On the upstream side of the railroad	*27	Unincorporated Areas of Chesterfield County.
	Approximately 1,200 feet upstream of State Route 288 Eastbound.	*176	
Swift Creek	At Woolridge Road (State Route 668)	*182	Unincorporated Areas of Chesterfield County.
	At the Powhatan County boundary	*227	
Swift Creek Reservoir	Between Swift Creek Reservoir Dam and Woolridge Road (State Route 668).	*182	Unincorporated Areas of Chesterfield County.
	Between Genito Road and the confluence with Little Tomahawk Creek and Tomahawk Creek.	*184	
Tomahawk Creek	At the confluence with the Swift Creek Reservoir	*184	Unincorporated Areas of Chesterfield County.
	Approximately 1,500 feet upstream of the confluence with the Swift Creek Reservoir.	*184	
Turkey Creek	At the confluence with Swift Creek	*194	Unincorporated Areas of Chesterfield County.
	Approximately 1.7 miles upstream of Mount Herman Road (State Route 606).	*258	
Winterpock Creek	At the confluence with Lake Chesdin	*163	Unincorporated Areas of Chesterfield County.
	Approximately 450 feet upstream of Beach Road (State Route 655).	*240	

Flooding source(s)	Location of referenced elevation	* Elevation in feet (NGVD) + Elevation in feet (NAVD) # Depth in feet above ground ∧ Elevation in meters (MSL) modified	Communities affected

* National Geodetic Vertical Datum.
+ North American Vertical Datum.
# Depth in feet above ground.
∧ Mean Sea Level, rounded to the nearest 0.1 meter.

ADDRESSES

Unincorporated Areas of Chesterfield County

Maps are available for inspection at 9800 Government Center Parkway, Chesterfield, VA 23832.

Marquette County, Wisconsin, and Incorporated Areas
Docket No.: FEMA–B–1229

Fox River	Approximately 1.8 miles downstream of State Highway 22	+770	City of Montello, Unincorporated Areas of Marquette County, Village of Endeavor.
	At the Columbia County boundary	+779	
Montello River	Approximately 292 feet downstream of the State Highway 22 bridge.	+771	City of Montello.
	At Montello Granite Company Dam	+774	
Neenah Creek	At the most downstream Columbia County boundary	+782	Unincorporated Areas of Marquette County.
	At the most upstream Columbia County boundary	+789	

* National Geodetic Vertical Datum.
+ North American Vertical Datum.
# Depth in feet above ground.
∧ Mean Sea Level, rounded to the nearest 0.1 meter.

ADDRESSES

City of Montello

Maps are available for inspection at 20 Underwood Avenue, Montello, WI 53949.

Unincorporated Areas of Marquette County

Maps are available for inspection at 77 West Park Street, Montello, WI 53949.

Village of Endeavor

Maps are available for inspection at 400 Church Street, Endeavor, WI 53930.

(Catalog of Federal Domestic Assistance No. 97.022, ''Flood Insurance.'')

Dated: November 8, 2012.

James A. Walke,

Acting Deputy Associate Administrator for Mitigation, Department of Homeland Security, Federal Emergency Management Agency.

[FR Doc. 2012–29686 Filed 12–7–12; 8:45 am]

BILLING CODE 9110–12–P

DEPARTMENT OF HOMELAND SECURITY

Coast Guard

46 CFR Part 8

[Docket No. USCG–2012–0861]

RIN 1625–AB90

Adding International Energy Efficiency (IEE) Certificate to List of Certificates a Recognized Classification Society May Issue

AGENCY: Coast Guard, DHS.

ACTION: Final rule.

SUMMARY: The Coast Guard is amending its Vessel Inspection Alternatives regulations to add the International Energy Efficiency (IEE) Certificate to the list of certificates that a recognized classification society may issue on behalf of the Coast Guard. We are making this change because Annex VI of the International Convention for the Prevention of Pollution by Ships, 1973, as modified by the Protocol of 1978, has been amended to address energy efficiency for ships, and these amendments call for the issuance of IEE Certificates starting January 1, 2013. This rule will enable recognized classification societies to apply to the Coast Guard to issue IEE Certificates to vessel owners and help to ensure that the demand for IEE Certificates is met.

DATES: This final rule is effective January 9, 2013.

ADDRESSES: Comments and material received from the public, as well as documents mentioned in this preamble as being available in the docket, are part of docket USCG–2012–0861 and are available for inspection or copying at the Docket Management Facility (M–30), U.S. Department of Transportation, West Building Ground Floor, Room W12–140, 1200 New Jersey Avenue SE.,

Washington, DC 20590, between 9 a.m. and 5 p.m., Monday through Friday, except Federal holidays. You may also find this docket on the Internet by going to *http://www.regulations.gov,* inserting USCG–2012–0861 in the Search box, and pressing Enter.

FOR FURTHER INFORMATION CONTACT: If you have questions on this rule, call or email Mr. Wayne Lundy, Systems Engineering Division, Office of Design and Engineering Standards, Coast Guard; telephone 202–372–1379, email *Wayne.M.Lundy@uscg.mil.* If you have questions on viewing the docket, call Renee V. Wright, Program Manager, Docket Operations, telephone 202–366–9826.

SUPPLEMENTARY INFORMATION:

Table of Contents for Preamble

I. Abbreviations
II. Regulatory History
III. Basis and Purpose
IV. Background
V. Discussion of Comments and Changes
VI. Regulatory Analyses
A. Regulatory Planning and Review
B. Small Entities
C. Assistance for Small Entities
D. Collection of Information
E. Federalism
F. Unfunded Mandates Reform Act
G. Taking of Private Property
H. Civil Justice Reform
I. Protection of Children
J. Indian Tribal Governments
K. Energy Effects
L. Technical Standards
M. Environment

I. Abbreviations

ABS American Bureau of Shipping
APPS Act to Prevent Pollution from Ships
CFR Code of Federal Regulations
DHS Department of Homeland Security
EPA Environmental Protection Agency
FR **Federal Register**
IEE International Energy Efficiency
IMO International Maritime Organization
MARPOL Protocol International Convention for the Prevention of Pollution from Ships, 1973, as modified by the Protocol of 1978
MEPC Maritime Environment Protection Committee
NMFS National Marine Fisheries Service
NPRM Notice of Proposed Rulemaking
OMB Office of Management and Budget
§ Section
U.S.C. United States Code

II. Regulatory History

On October 2, 2012, we published a notice of proposed rulemaking (NPRM) entitled ''Adding International Energy Efficiency (IEE) Certificate to List of Certificates a Recognized Classification Society May Issue'' in the **Federal Register** (77 FR 60096). We received one written submission on the proposed rule. No public meeting was requested and none was held.

III. Basis and Purpose

The Coast Guard is amending its Vessel Inspection Alternatives regulations to add the International Energy Efficiency (IEE) Certificate to the list of certificates that a recognized classification society may issue on behalf of the Coast Guard. We are making this change because Annex VI of the International Convention for the Prevention of Pollution by Ships, 1973 (MARPOL), as modified by the Protocol of 1978 (MARPOL Protocol), has been amended to address energy efficiency for ships, and these amendments call for the issuance of IEE Certificates starting January 1, 2013. This rule will enable recognized classification societies to apply to the Coast Guard to issue IEE Certificates to vessel owners and help to ensure that the demand for IEE Certificates is met.

IV. Background

The Act to Prevent Pollution from Ships (APPS), 33 U.S.C. 1901 *et seq.,* implements legislation for the International Convention for the Prevention of Pollution from Ships, 1973 as modified by the Protocol of 1978 (MARPOL Protocol), which includes MARPOL Annex VI: Regulations for the Prevention of Air Pollution from Ships. See 33 U.S.C. 1901(a)(4) and (5). APPS directs the Secretary of Homeland Security to prescribe any necessary or desired regulations to carry out the provisions of the MARPOL Protocol, and it directs the Secretary to designate those persons authorized to issue MARPOL Protocol certificates on behalf of the United States. See 33 U.S.C. 1903(c) and 1904. This authority was delegated to the Coast Guard. See Department of Homeland Security Delegation No. 0170.1. As required by APPS, the Coast Guard has consulted with the U.S. Environmental Protection Agency (EPA) regarding this final rule.

On July 15, 2011, in resolution MEPC.203(62), the International Maritime Organization's (IMO's) Marine Environment Protection Committee (MEPC) adopted amendments to MARPOL Annex VI. Those amendments, which were accepted July 1, 2012, and come into force January 1, 2013, contain energy efficiency provisions for new and existing ships. These amended regulations call for the issuance of an International Energy Efficiency (IEE) Certificate to document a ship's compliance with Annex VI's new Chapter 4, Regulations on Energy Efficiency for Ships. See amended Annex VI Regulations 5.4 and 6.4. Since the mid-1990s, under authority of 46 U.S.C. 3103, 3306, 3316, and 3703, and regulations in 46 CFR part 8—Vessel Inspection Alternatives, the Coast Guard has authorized recognized classification societies to issue international certificates to vessels. The Coast Guard regularly adds to the list of international certificates that classification societies may apply to issue to vessels on the Coast Guard's behalf. This list is located in 46 CFR 8.320(b). Recent additions to the list include the MARPOL 73/78 International Air Pollution Prevention Certificate and the International Anti-Fouling System Certificate. See, respectively, 74 FR 21554, May 8, 2009; and 76 FR 76896, December 9, 2011. The United States currently recognizes seven classification societies for purposes of issuing international certificates: The American Bureau of Shipping (ABS, United States); Det Norske Veritas (DNV, Norway); Lloyd's Register (LR, Great Britain); Germanischer Lloyd (GL, Germany); Bureau Veritas (BV, France); RINA S.p.A. (RINA, Italy), and ClassNK (NKK, Japan).

Recognized classification societies assist the Coast Guard and help to ensure that U.S.-flagged ships that qualify for an international certificate are able to obtain it promptly. As we stated in 1996, to avoid a duplication of effort between the Coast Guard and classification societies that results in extra costs to U.S. vessel owners, it is more efficient to take full advantage of inspections done by classification societies:

> * * * Insurance companies require that, before a vessel is insured, it be classed. This means that a classification society must survey a vessel for compliance with its class rules. Class rules are rules developed by the particular classification society to cover design, construction and safety of vessels. To ensure compliance with these class rules and with international standards, classification societies perform surveys on vessels using qualified marine surveyors. Many of the items examined by the classification society surveyors are the same as those examined by Coast Guard marine inspectors in their inspections for certification.

61 FR 68510–11, December 27, 1996.

Starting January 2013, U.S.-flagged ships that are 400 gross tonnage or more as measured under 46 U.S.C. 14302, Convention Measurement System, (hereafter 400 GT ITC or more) may be subject to detention or delay in foreign ports if they do not have an IEE certificate to document compliance with Annex VI. See amended Annex VI Regulation 19.

Section 8.320 of 46 CFR allows the Coast Guard to delegate issuance of an international convention certificate to a

recognized classification society only if the certificate is listed in § 8.320(b). The IEE Certificate is not currently listed in § 8.320(b).

V. Discussion of Comments and Changes

As noted, we published an NPRM on October 2, 2012 (77 FR 60096). We received one written submission containing three comments. See docket USCG–2012–0861.

First, the commenter recommended that the Coast Guard consult with the National Marine Fisheries Service (NMFS) within the Department of Commerce regarding this rulemaking, as we did with the EPA. She wrote that NMFS's expertise is valuable in determining whether adding the IEE Certificate is worth the additional administrative costs it will cause. In response to the first comment, the Coast Guard did contact NMFS and advised them of our rulemaking and this comment. The NMFS had no comments.

Second, regarding the comment on the administrative cost of adding the International Energy Efficiency (IEE) Certificate, we note that APPS requires compliance with Annex VI, which now includes a new chapter, Chapter 4, with energy efficiency requirements for ships, and the IEE Certificate documents compliance with these Chapter 4 requirements. See 33 U.S.C. 1907(a). Annex VI Regulation 6.5 directs that the IEE ''certificate shall be issued or endorsed either by the [United States] or any organization duly authorized by it.'' APPS directs the Secretary of Homeland Security to designate those persons authorized to issue MARPOL Protocol certificates on behalf of the United States and this final rule does that. See 33 U.S.C. 1904(a).

Third, the commenter recommended that the United States consider creating its own energy efficiency certificate that has greater standards than the IEE Certificate, and that such a certificate could meet the standards of the IEE Certificate, and more. The commenter stated: ''This way other areas could require the IEE Certificate as a minimum baseline, while [a U.S.] energy efficiency certificate would not only meet the minimum baseline but also go beyond it.'' This third comment is beyond the scope of this rulemaking. This rulemaking is solely intended to identify who may issue a MARPOL Annex VI IEE certificate on behalf of the Coast Guard. We made no changes from the proposed rule based on any of these comments.

In the NPRM, we proposed to insert a statement regarding preemption in § 8.300, of part 8, subpart C, International Convention Certificate Issuance, and to rename that section heading ''Purpose and Preemption.'' *See* 77 FR 60098, 60100, October 2, 2012. After another review of Presidential Memorandum of May 20, 2009 titled ''Preemption'' (74 FR 24693, May 22, 2009) however, we have determined that we should not include our proposed changes to § 8.300 in this final rule. As discussed in our preamble Federalism section, VI.E, below, States may not regulate in an area that is preempted by Federal statute. APPS is the source of preemption regarding the issuance of MARPOL certificates, not this regulatory action. Therefore, our only change to the CFR in this final rule is to add the IEE certificate to § 8.320.

VI. Regulatory Analyses

We developed this final rule after considering numerous statutes and executive orders related to rulemaking. Below we summarize our analyses based on these statutes or executive orders.

A. Regulatory Planning and Review

Executive Orders 12866 (''Regulatory Planning and Review'') and 13563 (''Improving Regulation and Regulatory Review'') direct agencies to assess the costs and benefits of available regulatory alternatives and, if regulation is necessary, to select regulatory approaches that maximize net benefits (including potential economic, environmental, public health and safety effects, distributive impacts, and equity). Executive Order 13563 emphasizes the importance of quantifying both costs and benefits, of reducing costs, of harmonizing rules, and of promoting flexibility. This final rule has not been designated a ''significant regulatory action'' under section 3(f) of Executive Order 12866. Accordingly, this final rule has not been reviewed by the Office of Management and Budget. A final regulatory assessment follows:

Under the authority of 33 U.S.C. 1903, 1904, and 46 U.S.C. 3103, 3306, 3316, and 3703, the Coast Guard is amending 46 CFR 8.320, to enable the Coast Guard to delegate the activity of issuing IEE Certificates to a recognized classification society that would act on behalf of the Coast Guard. The intent of this rule is to allow for the delegation of IEE Certification to recognized class societies and thus create options for industry in obtaining these certificates. This rule does not impose mandatory actions on the U.S. maritime industry.

Although requesting the delegation of authority to conduct IEE surveys, inspections, and certifications is voluntary, classification societies may incur minor costs associated with this process. The Coast Guard may incur costs associated with the evaluation of these requests and the issuance of delegations of authority to recognized classification societies.

The Coast Guard estimates that this rule would potentially affect seven classification societies that may request a delegation of authority to issue IEE Certificates. The Coast Guard used an Office of Management and Budget (OMB)-approved collection of information (1625–0041) to estimate the costs and burden.

The Coast Guard estimates that it will take classification society employees 5.25 hours to review the rulemaking requirements and prepare the delegation request, at an average one-time cost of $428.75 per classification society (3.5 hours at $112 per hour [1] for a director and 1.75 hours at $21 per hour for an administrative assistant). The total one-time cost for all seven classification societies is estimated to be $3,000 (rounded).

In addition, the Coast Guard estimates that it will incur a one-time cost to review and approve the requests for delegation. Based on the OMB-approved collections of information discussed above, the Coast Guard estimates that it will take about 5 hours to review, approve, and issue an order to delegate authority, at an average cost of $360 per event (3.5 hours for reviewing/approving and 1.5 hours for issuing at $72 per hour for a lieutenant (O–3)). The Coast Guard estimates a total one-time Government cost of $2,500 (rounded) based on OMB-approved collection of information estimates.

The Coast Guard estimates the total one-time cost of this rule for classification societies and the Government combined to be approximately $5,500 (non-discounted) for classification societies and the Government combined.

This rule may result in several benefits to the U.S. maritime industry. First, it may result in a reduction of potential wait time for IEE certificates. In the absence of delegation of authority to classification societies, vessel owners and operators may experience delays while the Coast Guard processes and issues IEE Certificates. The Coast Guard also might have to redirect resources that could be used for other missions, resulting in a less efficient use of Government resources. Finally, this rule may mitigate potential consequences to

[1] All hourly wages shown are ''fully loaded'' wages. Fully loaded wages include the costs of employer paid benefits such as health insurance.

U.S.-flagged vessels due to non-compliance with the Convention, including costly vessel detentions in foreign ports.

B. Small Entities

Under the Regulatory Flexibility Act (5 U.S.C. 601–612), we have considered whether this rule would have a significant economic impact on a substantial number of small entities. The term ''small entities'' comprises small businesses, not-for-profit organizations that are independently owned and operated and are not dominant in their fields, and governmental jurisdictions with populations of less than 50,000.

Affected classification societies are classified under one of the following North American Industry Classification System codes for water transportation: 488330—Navigational Services to Shipping, 488390—Other Support Activities for Water Transportation, or 541611—Administrative Management and General Management Consulting Services.

The only predominate U.S. classification society is the American Bureau of Shipping (ABS). ABS is a privately owned non-profit organization that is dominant in its field (Source: 2011 Hoovers, *http://www.hoovers.com/company/American Bureau of Shipping Inc/rfsksji-1.html).* Based on publicly available information, ABS has more than 3,000 employees and annual revenues of more than $800 million.[2] We do not consider ABS to be a small entity using the Small Business Act definitions of a small entity.

The Coast Guard expects that this rule will not have a significant economic impact on a substantial number of small entities. As described in section VI.A. of this preamble, ''Regulatory Planning and Review,'' the anticipated cost of this proposed rule, per class society, would be less than $500. This rule is not mandatory, and classification societies, regardless of size, would choose to participate only if the benefits are greater than the costs.

Therefore, the Coast Guard certifies under 5 U.S.C. 605(b) that this final rule will not have a significant economic impact on a substantial number of small entities.

C. Assistance for Small Entities

Under section 213(a) of the Small Business Regulatory Enforcement Fairness Act of 1996 (Pub. L. 104–121), we want to assist small entities in understanding this rule so that they can better evaluate its effects on them and participate in the rulemaking. If this rule would affect your small business, organization, or governmental jurisdiction and you have questions concerning its provisions or options for compliance, please consult Mr. Wayne Lundy, Systems Engineering Division, Coast Guard, telephone 202–372–1379 or email *Wayne.M.Lundy@uscg.mil*. The Coast Guard will not retaliate against small entities that question or complain about this rule or any policy or action of the Coast Guard.

D. Collection of Information

This rule calls for no new collection of information under the Paperwork Reduction Act of 1995 (44 U.S.C. 3501–3520) because the Coast Guard expects that the number of applications would be fewer than 10 in any given year.

E. Federalism

A rule has implications for federalism under Executive Order 13132, Federalism, if it has a substantial direct effect on the States, on the relationship between the national government and the States, or on the distribution of power and responsibilities among the various levels of government. We have analyzed this rule under that Order and have determined that it does not have implications for federalism.

As noted above, APPS implements the MARPOL Protocol. APPS also directs the Secretary to ''designate those persons authorized to issue on behalf of the United States the certificates required by the MARPOL Protocol.'' See 33 U.S.C. 1904. By enacting this specific provision, it was the intent of Congress to give the Coast Guard, as delegated by the Secretary, the exclusive authority to regulate within this field.

A State may not regulate in an area such as this one which is field preempted by Federal statute. Because the exclusive authority to issue certificates under APPS was given to the DHS Secretary by law, and further delegated to the Coast Guard, this rule does not substantially affect the States, the relationship between the national government and the States, or the distribution of power and responsibilities among the various levels of government. Therefore, we have determined that this rule does not have implications for federalism because the States are preempted from issuing certificates evincing compliance with APPS.

F. Unfunded Mandates Reform Act

The Unfunded Mandates Reform Act of 1995 (2 U.S.C. 1531–1538) requires Federal agencies to assess the effects of their discretionary regulatory actions. In particular, the Act addresses actions that may result in the expenditure by a State, local, or Tribal government, in the aggregate, or by the private sector of $100,000,000 (adjusted for inflation) or more in any one year. Though this rule would not result in such expenditure, we do discuss the effects of this rule elsewhere in this preamble.

G. Taking of Private Property

This rule will not cause a taking of private property or otherwise have taking implications under Executive Order 12630, Governmental Actions and Interference with Constitutionally Protected Property Rights.

H. Civil Justice Reform

This rule meets applicable standards in sections 3(a) and 3(b)(2) of Executive Order 12988, Civil Justice Reform, to minimize litigation, eliminate ambiguity, and reduce burden.

I. Protection of Children

We have analyzed this rule under Executive Order 13045, Protection of Children from Environmental Health Risks and Safety Risks. This rule is not an economically significant rule and does not create an environmental risk to health or a risk to safety that might disproportionately affect children.

J. Indian Tribal Governments

This rule does not have Tribal implications under Executive Order 13175, Consultation and Coordination with Indian Tribal Governments, because it does not have a substantial direct effect on one or more Tribal governments, on the relationship between the Federal Government and Tribal governments, or on the distribution of power and responsibilities between the Federal Government and Tribal governments.

K. Energy Effects

We have analyzed this rule under Executive Order 13211, Actions Concerning Regulations That Significantly Affect Energy Supply, Distribution, or Use. We have determined that it is not a ''significant energy action'' under that order because it is not a ''significant regulatory action'' under Executive Order 12866, supplemented by Executive Order 13563, and is not likely to have a significant adverse effect on the supply, distribution, or use of energy. The Administrator of the Office of

[2] Source: 2011 Bloomberg, *http://investing.businessweek.com/research/stocks/private/person.asp?personId=28915205&privcapId=4217113&previousCapId=764755&previous Title=ABS%20Group%20of%20Companies,%20Inc.*

Information and Regulatory Affairs has not designated it as a significant energy action. Therefore, it does not require a Statement of Energy Effects under Executive Order 13211.

L. Technical Standards

The National Technology Transfer and Advancement Act (NTTAA) (15 U.S.C. 272 note) directs agencies to use voluntary consensus standards in their regulatory activities unless the agency provides Congress, through the OMB, with an explanation of why using these standards would be inconsistent with applicable law or otherwise impractical. Voluntary consensus standards are technical standards (e.g., specifications of materials, performance, design, or operation; test methods; sampling procedures; and related management systems practices) that are developed or adopted by voluntary consensus standards bodies.

This rule does not use technical standards. Therefore, we did not consider the use of voluntary consensus standards.

M. Environment

We have analyzed this rule under Department of Homeland Security Management Directive 023–01 and Commandant Instruction M16475.lD, which guide the Coast Guard in complying with the National Environmental Policy Act of 1969 (42 U.S.C. 4321–4370f), and have concluded that this action is one of a category of actions that do not individually or cumulatively have a significant effect on the human environment. This rule is categorically excluded under section 2.B.2, figure 2–1, paragraphs (34)(b) and (d), of the Instruction, and under section 6(b) of the ''Appendix to National Environmental Policy Act: Coast Guard Procedures for Categorical Exclusions, Notice of Final Agency Policy'' (67 FR 48243, July 23, 2002). This rule involves the delegation of authority, the inspection and documentation of vessels, and congressionally-mandated regulations designed to improve or protect the environment. An environmental analysis checklist and a categorical exclusion determination are available in the docket where indicated under **ADDRESSES**.

List of Subjects in 46 CFR Part 8

Administrative practice and procedure, Incorporation by reference, Organization and functions (Government agencies), Reporting and recordkeeping requirements, Vessels.

For the reasons discussed in the preamble, the Coast Guard amends 46 CFR part 8 as follows:

PART 8—VESSEL INSPECTION ALTERNATIVES

■ 1. The authority citation for part 8 is revised to read as follows:

Authority: 33 U.S.C. 1903, 1904, 3803 and 3821; 46 U.S.C. 3103, 3306, 3316, and 3703; Department of Homeland Security Delegation No. 0170.1 and Aug. 8, 2011 Delegation of Authority, Anti-Fouling Systems.

■ 2. Amend § 8.320 as follows:

■ a. In paragraph (b)(12), remove the word ''and'';

■ b. In paragraph (b)(13), remove the period at the end of the sentence and add, in its place, the text ''; and''; and

■ c. Add paragraph (b)(14) to read as follows:

§ 8.320 Classification society authorization to issue international certificates.

* * * * *

(b) * * *

(14) MARPOL 73/78 International Energy Efficiency Certificate.

* * * * *

Dated: December 5, 2012.

J.G. Lantz,

Director of Commercial Regulations and Standards, U.S. Coast Guard.

[FR Doc. 2012–29749 Filed 12–7–12; 8:45 am]

BILLING CODE 9110–04–P

DEPARTMENT OF COMMERCE

National Oceanic and Atmospheric Administration

50 CFR Part 622

[Docket No. 100812345–2142–03]

RIN 0648–XC310

Fisheries of the Caribbean, Gulf of Mexico, and South Atlantic; 2012 Commercial Accountability Measure and Closure for South Atlantic Blue Runner

AGENCY: National Marine Fisheries Service (NMFS), National Oceanic and Atmospheric Administration (NOAA), Commerce.

ACTION: Temporary rule; closure.

SUMMARY: NMFS implements accountability measures (AMs) for the commercial sector for blue runner in the exclusive economic zone (EEZ) of the South Atlantic. Commercial landings for blue runner, as estimated by the Science and Research Director, have reached the commercial annual catch limit (ACL). Therefore, NMFS closes the commercial sector for blue runner on December 10, 2012, for the remainder of the 2012 fishing year, through December 31, 2012. This action is necessary to protect the blue runner resource in the South Atlantic.

DATES: This rule is effective 12:01 a.m., local time, December 10, 2012, until 12:01 a.m., local time, January 1, 2013.

FOR FURTHER INFORMATION CONTACT: Catherine Hayslip, telephone: 727–824–5305, email: *Catherine.Hayslip@noaa.gov.*

SUPPLEMENTARY INFORMATION: The snapper-grouper fishery of the South Atlantic is managed under the Fishery Management Plan for the Snapper-Grouper Fishery of the South Atlantic Region (FMP). Blue runner in the South Atlantic are managed under this FMP. The FMP was prepared by the South Atlantic Fishery Management Council and is implemented under the authority of the Magnuson-Stevens Fishery Conservation and Management Act by regulations at 50 CFR part 622.

The commercial ACL for blue runner in the South Atlantic is 188,329 lb (85,425 kg), round weight, as specified in 50 CFR 622.49(b)(19)(i)(A).

In accordance with regulations at 50 CFR 622.49(b)(19)(i)(A), NMFS is required to close the commercial sector for blue runner when the commercial ACL for blue runner has been reached, or is projected to be reached, by filing a notification to that effect with the Office of the Federal Register. NMFS has determined that the commercial ACL for South Atlantic blue runner has been met. Accordingly, the commercial sector for South Atlantic blue runner is closed effective 12:01 a.m., local time, December 10, 2012, until 12:01 a.m., local time, January 1, 2013.

The operator of a vessel with a valid commercial vessel permit for South Atlantic snapper-grouper having blue runner onboard must have landed and bartered, traded, or sold such blue runner prior to 12:01 a.m., local time, December 10, 2012. During this commercial closure, the sale or purchase of blue runner taken from the EEZ is prohibited. The prohibition on sale or purchase does not apply to the sale or purchase of blue runner that were harvested, landed ashore, and sold prior to 12:01 a.m., local time, December 10, 2012, and were held in cold storage by a dealer or processor. For a person on board a vessel for which a Federal commercial permit for the South Atlantic snapper-grouper fishery has been issued, the sale and purchase provisions of the commercial closure for blue runner would apply regardless of where the fish are harvested, *i.e.,* in state or Federal waters, as specified in 50 CFR 622.49(b)(19)(i)(A).

Classification

The Regional Administrator, Southeast Region, NMFS, has determined this temporary rule is necessary for the conservation and management of South Atlantic blue runner and is consistent with the Magnuson-Stevens Act and other applicable laws.

This action is taken under 50 CFR 622.43(a) and is exempt from review under Executive Order 12866.

These measures are exempt from the procedures of the Regulatory Flexibility Act because the temporary rule is issued without opportunity for prior notice and comment.

This action responds to the best available information recently obtained from the fishery. The Assistant Administrator for Fisheries, NOAA, (AA), finds that the need to immediately implement this action to close the commercial sector for blue runner constitutes good cause to waive the requirements to provide prior notice and opportunity for public comment pursuant to the authority set forth in 5 U.S.C. 553(b)(B), as such procedures would be unnecessary and contrary to the public interest. Such procedures would be unnecessary because the rule itself has been subject to notice and comment, and all that remains is to notify the public of the closure. Allowing prior notice and opportunity for public comment is contrary to the public interest because of the need to immediately implement this action to protect the blue runner resource. The capacity of the fishing fleet allows for rapid harvest of the ACL and prior notice and opportunity for public comment would result in a harvest well in excess of the established commercial ACL.

For the aforementioned reasons, the AA also finds good cause to waive the 30-day delay in the effectiveness of this action under 5 U.S.C. 553(d)(3).

Authority: 16 U.S.C. 1801 *et seq.*

Dated: December 5, 2012.

William D. Chappell,

Acting Deputy Director, Office of Sustainable Fisheries, National Marine Fisheries Service.

[FR Doc. 2012–29739 Filed 12–5–12; 4:15 pm]

BILLING CODE 3510–22–P

Proposed Rules

Federal Register
Vol. 77, No. 237
Monday, December 10, 2012

This section of the FEDERAL REGISTER contains notices to the public of the proposed issuance of rules and regulations. The purpose of these notices is to give interested persons an opportunity to participate in the rule making prior to the adoption of the final rules.

DEPARTMENT OF TRANSPORTATION

Federal Aviation Administration

14 CFR Part 39

[Docket No. FAA–2012–0150; Directorate Identifier 2011–NM–234–AD]

RIN 2120–AA64

Airworthiness Directives; Airbus Airplanes

AGENCY: Federal Aviation Administration (FAA), DOT.

ACTION: Supplemental notice of proposed rulemaking (NPRM); reopening of comment period.

SUMMARY: We are revising an earlier proposed airworthiness directive (AD) for all Airbus Model A318, A319, A320, and A321 series airplanes. That supplemental notice of proposed rulemaking (SNPRM) proposed an inspection to determine if certain angle of attack (AOA) probes are installed, and replacement of any affected AOA probe. That SNPRM was prompted by reports of oil residue between the stator and the rotor parts of the position resolvers of the AOA vane, which was a result of incorrect removal of the machining oil during the manufacturing process of the AOA resolvers. This action revises that SNPRM by clarifying the affected parts. We are proposing this AD to prevent erroneous AOA information and consequent delayed or non-activation of the AOA protection systems which, during flight at a high angle of attack, could result in reduced control of the airplane. Since these actions impose an additional burden over that proposed in the SNPRM, we are reopening the comment period to allow the public the chance to comment on these proposed changes.

DATES: We must receive comments on this proposed AD by January 4, 2013.

ADDRESSES: You may send comments by any of the following methods:

- Federal eRulemaking Portal: Go to *http://www.regulations.gov*. Follow the instructions for submitting comments.
- Fax: (202) 493–2251.
- Mail: U.S. Department of Transportation, Docket Operations, M–30, West Building Ground Floor, Room W12–140, 1200 New Jersey Avenue SE., Washington, DC 20590.
- Hand Delivery: U.S. Department of Transportation, Docket Operations, M–30, West Building Ground Floor, Room W12–140, 1200 New Jersey Avenue SE., Washington, DC, between 9 a.m. and 5 p.m., Monday through Friday, except Federal holidays.

For service information identified in this proposed AD, contact Airbus, Airworthiness Office—EAS, 1 Rond Point Maurice Bellonte, 31707 Blagnac Cedex, France; telephone +33 5 61 93 36 96; fax +33 5 61 93 44 51; email *account.airworth-eas@airbus.com;* Internet *http://www.airbus.com*. For Thales Avionics service information identified in this proposed AD, contact Thales Avionics, Retrofit Manager, 105, Avenue du Général Eisenhower, BP 63647, 31036 Toulouse Cedex 1, France; telephone +33 5 61 19 76 95; fax +33 5 61 19 68 20; email *retrofit.ata@fr.thalesgroup.com;* Internet *http://www.thalesgroup.com/aerospace*. You may review copies of the referenced service information at the FAA, Transport Airplane Directorate, 1601 Lind Avenue SW., Renton, WA. For information on the availability of this material at the FAA, call 425–227–1221.

Examining the AD Docket

You may examine the AD docket on the Internet at *http://www.regulations.gov;* or in person at the Docket Operations office between 9 a.m. and 5 p.m., Monday through Friday, except Federal holidays. The AD docket contains this proposed AD, the regulatory evaluation, any comments received, and other information. The street address for the Docket Operations office (telephone (800) 647–5527) is in the **ADDRESSES** section. Comments will be available in the AD docket shortly after receipt.

FOR FURTHER INFORMATION CONTACT: Sanjay Ralhan, Aerospace Engineer, International Branch, ANM–116, Transport Airplane Directorate, FAA, 1601 Lind Avenue SW., Renton, Washington 98057–3356; telephone (425) 227–1405; fax (425) 227–1149.

SUPPLEMENTARY INFORMATION:

Comments Invited

We invite you to send any written relevant data, views, or arguments about this proposed AD. Send your comments to an address listed under the **ADDRESSES** section. Include ''Docket No. FAA–2012–0150; Directorate Identifier 2011–NM–234–AD'' at the beginning of your comments. We specifically invite comments on the overall regulatory, economic, environmental, and energy aspects of this proposed AD. We will consider all comments received by the closing date and may amend this proposed AD based on those comments.

We will post all comments we receive, without change, to *http://www.regulations.gov,* including any personal information you provide. We will also post a report summarizing each substantive verbal contact we receive about this proposed AD.

Discussion

We proposed to amend 14 CFR part 39 with an earlier SNPRM for the specified products, which was published in the **Federal Register** on July 11, 2012 (77 FR 40823). That earlier SNPRM proposed to require actions intended to address the unsafe condition for all Airbus Model A318, A319, A320, and A321 series airplanes.

Since that SNPRM (77 FR 40823, July 11, 2012) was issued, we received further information from Airbus clarifying the affected parts subject to the unsafe condition.

Comments

We gave the public the opportunity to comment on the previous SNPRM (77 FR 40823, July 11, 2012). The following presents the comments received on the previous SNPRM and the FAA's response to each comment.

Request To Include Other Service Information

Airbus requested that we revise paragraph (g)(2) of the previous SNPRM (77 FR 40823, dated July 11, 2012) to include other service information that clarifies the affected parts. Airbus stated that paragraph (g)(2) of the previous SNPRM should read, ''If any probe is found having P/N C16291AB, on which * * * or AIRBUS Service Bulletin 34–1444 [sic] Revision 00 dated October 07, 2009, has been incorporated * * * ''

We agree with Airbus's request. We have revised paragraph (g)(2) of this

SNPRM to include replacement of an AOA probe, P/N C16291AB, on which Thales Avionics Service Bulletin C16291A–34–009, dated September 10, 2009; or Airbus Service Bulletin A320–34–1444, dated October 7, 2009; has been accomplished. We have removed the reference to Thales Avionics Service Bulletin C16291A–34–007, Revision 01, dated December 3, 2009, from paragraph (g)(2) and (i)(2) of this SNPRM.

We have also revised paragraphs (g)(1) and (i)(2) of this SNPRM to prevent replacement with an AOA probe on which Thales Avionics Service Bulletin C16291A–34–009, dated September 10, 2009; or Airbus Service Bulletin A320–34–1444, dated October 7, 2009; has been incorporated.

Request To Use Additional Service Information

Airbus requested that we revise paragraph (i)(1) of the previous SNPRM (77 FR 40823, dated July 11, 2012) to include Thales Avionics Service Bulletin C16291A–34–007, Revision 01, dated December 3, 2009; and Thales Avionics Service Bulletin C16291A–34–007, Revision 02, dated December 16, 2011.

We agree with Airbus's request. We have added the service information to paragraph (i) of this AD.

Request To Use the Airplane Maintenance Manual for Replacing the AOA Probes

UAL requested that, in paragraph (g)(2) of the previous SNPRM (77 FR 40823, dated July 11, 2012), the AOA probes be replaced using Airplane Maintenance Manual (AMM) 34–11–19 PB 401, for the corrective action.

We partially agree with UAL's request. Although we do not agree to mandate the use of Task 34–11–19–000–001–A, Removal of the Angle of Attack Sensor, of the Airbus A318/A319/A320/A321 AMM, we do agree that this AMM task includes procedures for replacing the AOA probes. Therefore, we have added Note 1 to paragraph (g)(2) of this SNPRM, to specify that additional guidance for replacing the AOA probes may be found in Task 34–11–19–000–001–A, Removal of the Angle of Attack Sensor, of the Airbus A318/A319/A320/A321 AMM.

Request To Revise the Labor Rate

United Airlines (UAL) requested that the ''Costs of Compliance'' section in the previous SNPRM (77 FR 40823, July 11, 2012) be updated to a new labor rate. UAL stated that the FAA's costs of compliance were estimated to take about 2 work-hours per product to comply with the basic requirements of the previous SNPRM, and that the average labor rate is $85 per work-hour. UAL stated that it agrees with the estimated work-hours, but it would like to provide an updated labor rate of $97 per work-hour.

We disagree with UAL's request to change the labor rate in this SNPRM. Our estimate of $85 per work-hour is the current burdened labor rate established for use by the FAA Office of Aviation Policy, Plans, and Management Analysis. The burdened labor rate includes the labor cost, overhead, administrative expenses, etc. Because the labor rate used in our calculations accounts for the variations in costs among those in the airline industry, we consider that $85 per work-hour is appropriate. No change to this SNPRM is necessary in this regard.

FAA's Determination and Requirements of This Proposed AD

This product has been approved by the aviation authority of another country, and is approved for operation in the United States. Pursuant to our bilateral agreement with the State of Design Authority, we have been notified of the unsafe condition described in the MCAI and service information referenced above. We are proposing this AD because we evaluated all pertinent information and determined an unsafe condition exists and is likely to exist or develop on other products of the same type design.

Certain changes described above expand the scope of the earlier SNPRM (77 FR 40823, dated July 11, 2012). As a result, we have determined that it is necessary to reopen the comment period to provide additional opportunity for the public to comment on this proposed AD.

Costs of Compliance

Based on the service information, we estimate that this proposed AD would affect about 755 products of U.S. registry. We also estimate that it would take about 2 work-hours per product to comply with the basic requirements of this proposed AD. The average labor rate is $85 per work-hour. Based on these figures, we estimate the cost of the proposed AD on U.S. operators to be $128,350, or $170 per product.

In addition, we estimate that any necessary follow-on actions would take about 3 work-hours and require parts costing $0, for a cost of $255 per product. We have no way of determining the number of products that may need these actions.

Authority for This Rulemaking

Title 49 of the United States Code specifies the FAA's authority to issue rules on aviation safety. Subtitle I, section 106, describes the authority of the FAA Administrator. ''Subtitle VII: Aviation Programs,'' describes in more detail the scope of the Agency's authority.

We are issuing this rulemaking under the authority described in ''Subtitle VII, Part A, Subpart III, Section 44701: General requirements.'' Under that section, Congress charges the FAA with promoting safe flight of civil aircraft in air commerce by prescribing regulations for practices, methods, and procedures the Administrator finds necessary for safety in air commerce. This regulation is within the scope of that authority because it addresses an unsafe condition that is likely to exist or develop on products identified in this rulemaking action.

Regulatory Findings

We determined that this proposed AD would not have federalism implications under Executive Order 13132. This proposed AD would not have a substantial direct effect on the States, on the relationship between the national Government and the States, or on the distribution of power and responsibilities among the various levels of government.

For the reasons discussed above, I certify this proposed regulation:

1. Is not a ''significant regulatory action'' under Executive Order 12866;

2. Is not a ''significant rule'' under the DOT Regulatory Policies and Procedures (44 FR 11034, February 26, 1979);

3. Will not affect intrastate aviation in Alaska; and

4. Will not have a significant economic impact, positive or negative, on a substantial number of small entities under the criteria of the Regulatory Flexibility Act.

We prepared a regulatory evaluation of the estimated costs to comply with this proposed AD and placed it in the AD docket.

List of Subjects in 14 CFR Part 39

Air transportation, Aircraft, Aviation safety, Incorporation by reference, Safety.

The Proposed Amendment

Accordingly, under the authority delegated to me by the Administrator, the FAA proposes to amend 14 CFR part 39 as follows:

PART 39—AIRWORTHINESS DIRECTIVES

1. The authority citation for part 39 continues to read as follows:

Authority: 49 U.S.C. 106(g), 40113, 44701.

§ 39.13 [Amended]

2. The FAA amends § 39.13 by adding the following new AD:

Airbus: Docket No. FAA–2012–0150; Directorate Identifier 2011–NM–234–AD.

(a) Comments Due Date

We must receive comments by January 4, 2013.

(b) Affected ADs

None.

(c) Applicability

This AD applies to all Airbus Model A318–111, –112, –121, and –122 airplanes; Model A319–111, –112, –113, –114, –115, –131, –132, and –133 airplanes; Model A320–111, –211, –212, –214, –231, –232, and –233 airplanes; and Model A321–111, –112, –131, –211, –212, –213, –231, and –232 airplanes; certificated in any category; all manufacturer serial numbers.

(d) Subject

Air Transport Association (ATA) of America Code 34: Navigation.

(e) Reason

This AD was prompted by reports of oil residue between the stator and the rotor parts of the position resolvers of the angle of attack (AOA) vane, which was a result of incorrect removal of the machining oil during the manufacturing process of the AOA resolvers. We are issuing this AD to prevent erroneous AOA information and consequent delayed or non-activation of the AOA protection systems which, during flight at a high angle of attack, could result in reduced control of the airplane.

(f) Compliance

You are responsible for having the actions required by this AD performed within the compliance times specified, unless the actions have already been done.

(g) Inspection

Within 12 months after the effective date of this AD, except as provided by paragraph (h) of this AD: Do the inspections specified in paragraphs (g)(1) and (g)(2) of this AD.

(1) Inspect to determine the part number (P/N) and serial number of each Thales Avionics AOA probe, in accordance with the Accomplishment Instructions of Airbus Service Bulletin A320–34–1452, excluding Appendix 01, dated January 29, 2010. If any probe is found having P/N C16291AA and having a serial number listed in Thales Avionics Service Bulletin C16291A–34–007, Revision 03, dated April 10, 2012: Within 12 months after the effective date of this AD, replace the AOA probe, in accordance with the Accomplishment Instructions of Airbus Service Bulletin A320–34–1452, excluding Appendix 01, dated January 29, 2010, provided that Thales Avionics Service Bulletin C16291A–34–009, dated September 10, 2009; or Airbus Service Bulletin A320–34–1444, dated October 7, 2009; have not been accomplished. Thales Avionics Service Bulletin C16291A–34–009, dated September 10, 2009; and Airbus Service Bulletin A320–34–1444, dated October 7, 2009 (which are not incorporated by reference in this AD); cannot be used for the installation of AOA probes having P/N C16291AB. A review of airplane maintenance records is acceptable in lieu of this inspection if the part number and serial number of the installed AOA probes can be conclusively determined from that review.

(2) Inspect to determine the part number and serial number of each Thales Avionics AOA probe, in accordance with paragraph 3.C.(1)a of the Accomplishment Instructions of Airbus Service Bulletin A320–34–1452, excluding Appendix 01, dated January 29, 2010. If any probe is found having P/N C16291AB, on which Thales Avionics Service Bulletin C16291A–34–009, dated September 10, 2009; or Airbus Service Bulletin A320–34–1444, dated October 7, 2009 (which are not incorporated by reference in this AD); has been accomplished: Within 12 months after the effective date of this AD, replace the AOA probe, in accordance with a method approved by the Manager, International Branch, ANM–116, FAA, or European Aviation Safety Agency (EASA) (or its delegated agent). A review of airplane maintenance records is acceptable in lieu of the inspection specified in this paragraph if the part number of the installed AOA probes can be conclusively determined from that review.

Note 1 to paragraph (g)(2) of this AD: Additional guidance for replacing the AOA probes may be found in Task 34–11–19–000–001–A, Removal of the Angle of Attack Sensor, of the Airbus A318/A319/A320/A321 Aircraft Maintenance Manual, which is not incorporated by reference in this AD.

(h) Exception

For any airplane on which Airbus modification 150006 (installation of Thales Avionics AOA probes P/N C16291AB) or modification 26934 (installation of Goodrich AOA probes P/N 0861ED) has been embodied in production, and on which no AOA probe replacement has been made since first flight: The actions specified in paragraph (g) of this AD are not required.

(i) Parts Installation Limitations

(1) As of the effective date of this AD, no person may install a Thales Avionics AOA probe, P/N C16291AA, having a serial number listed in Thales Avionics Service Bulletin C16291A–34–007, Revision 03, dated April 10, 2012, on any airplane, unless that Thales Avionics probe has been inspected, re-identified, and tested, in accordance with the Accomplishment Instructions of the service information specified in paragraph (i)(1)(i), (i)(1)(ii), or (i)(1)(iii) of this AD.

(i) Thales Avionics Service Bulletin C16291A–34–007, Revision 03, dated April 10, 2012.

(ii) Thales Avionics Service Bulletin C16291A–34–007, Revision 02, dated December 16, 2011.

(iii) Thales Avionics Service Bulletin C16291A–34–007, Revision 01, dated December 3, 2009.

(2) As of the effective date of this AD, no person may install a Thales Avionics AOA probe, P/N C16291AB, on which Thales Avionics Service Bulletin C16291A–34–009, dated September 10, 2009; or Airbus Service Bulletin A320–34–1444, dated October 7, 2009 (which is not incorporated by reference in this AD); has been incorporated.

(j) Other FAA AD Provisions

The following provisions also apply to this AD:

(1) *Alternative Methods of Compliance (AMOCs):* The Manager, International Branch, ANM–116, Transport Airplane Directorate, FAA, has the authority to approve AMOCs for this AD, if requested using the procedures found in 14 CFR 39.19. In accordance with 14 CFR 39.19, send your request to your principal inspector or local Flight Standards District Office, as appropriate. If sending information directly to the International Branch, send it to ATTN: Sanjay Ralhan, Aerospace Engineer, International Branch, ANM–116, Transport Airplane Directorate, FAA, 1601 Lind Avenue SW., Renton, Washington 98057–3356; telephone (425) 227–1405; fax (425) 227–1149. Information may be emailed to: *9–ANM–116–AMOC–REQUESTS@faa.gov.* Before using any approved AMOC, notify your appropriate principal inspector, or lacking a principal inspector, the manager of the local flight standards district office/certificate holding district office. The AMOC approval letter must specifically reference this AD.

(2) *Airworthy Product:* For any requirement in this AD to obtain corrective actions from a manufacturer or other source, use these actions if they are FAA-approved. Corrective actions are considered FAA-approved if they are approved by the State of Design Authority (or their delegated agent). You are required to assure the product is airworthy before it is returned to service.

(k) Related Information

(1) Refer to MCAI European Aviation Safety Agency Airworthiness Directive 2011–0203, dated October 13, 2011, and the service information specified in paragraphs (k)(1)(i) and (k)(1)(ii) of this AD, for related information.

(i) Airbus Service Bulletin A320–34–1452, excluding Appendix 01, dated January 29, 2010.

(ii) Thales Avionics Service Bulletin C16291A–34–007, Revision 03, dated April 10, 2012.

(2) For Airbus service information identified in this AD, contact Airbus, Airworthiness Office—EAS, 1 Rond Point Maurice Bellonte, 31707 Blagnac Cedex, France; telephone +33 5 61 93 36 96; fax +33 5 61 93 44 51; email *account.airworth-eas@airbus.com;* Internet *http://www.airbus.com.* For Thales Avionics service information identified in this AD, contact Thales Avionics, Retrofit Manager, 105,

Avenue du Général Eisenhower, BP 63647, 31036 Toulouse Cedex 1, France; telephone +33 5 61 19 76 95; fax +33 5 61 19 68 20; email *retrofit.ata@fr.thalesgroup.com;* Internet *http://www.thalesgroup.com/aerospace.* You may review copies of the referenced service information at the FAA, Transport Airplane Directorate, 1601 Lind Avenue SW., Renton, Washington. For information on the availability of this material at the FAA, call 425–227–1221.

Issued in Renton, Washington, on November 30, 2012.

Ali Bahrami,

Manager, Transport Airplane Directorate, Aircraft Certification Service.

[FR Doc. 2012–29713 Filed 12–7–12; 8:45 am]

BILLING CODE 4910–13–P

DEPARTMENT OF TRANSPORTATION

Federal Aviation Administration

14 CFR Part 39

[Docket No. FAA–2012–1224; Directorate Identifier 2012–NM–112–AD]

RIN 2120–AA64

Airworthiness Directives; Airbus Airplanes

AGENCY: Federal Aviation Administration (FAA), DOT.

ACTION: Notice of proposed rulemaking (NPRM).

SUMMARY: We propose to adopt a new airworthiness directive (AD) for all Airbus Model A300 B4–600, B4–600R, and F4–600R series airplanes, and Model A300 C4–605R Variant F airplanes (collectively called Model A300–600 series airplanes); and Model A310 series airplanes. This proposed AD was prompted by a report of an uncommanded slide back of the co-pilot seat to the end stop position. This proposed AD would require a one-time inspection for a part number, a tensile test of the affected seats, and corrective actions if necessary. We are proposing this AD to detect and prevent unwanted movement of a pilot or co-pilot seat in the horizontal direction, which could lead to inadvertent input on the flight control commands and possibly result in loss of controllability of the airplane.

DATES: We must receive comments on this proposed AD by January 24, 2013.

ADDRESSES: You may send comments by any of the following methods:

- Federal eRulemaking Portal: Go to *http://www.regulations.gov.* Follow the instructions for submitting comments.
- Fax: (202) 493–2251.
- Mail: U.S. Department of Transportation, Docket Operations, M–30, West Building Ground Floor, Room W12–140, 1200 New Jersey Avenue SE., Washington, DC 20590.
- Hand Delivery: U.S. Department of Transportation, Docket Operations, M–30, West Building Ground Floor, Room W12–140, 1200 New Jersey Avenue SE., Washington, DC, between 9 a.m. and 5 p.m., Monday through Friday, except Federal holidays.

For Airbus service information identified in this proposed AD, contact Airbus SAS–EAW (Airworthiness Office), 1 Rond Point Maurice Bellonte, 31707 Blagnac Cedex, France; telephone +33 5 61 93 36 96; fax +33 5 61 93 44 51; email *account.airworth-eas@airbus.com;* Internet *http://www.airbus.com.* For EADS SOGERMA service information identified in this AD, contact EADS SOGERMA, Zone Industrielle de l'Arsenal, CS. 60109, 17303 Rochefort, Cedex France; phone: 33 5 46 82 84 84; fax: 33 5 46 82 88 13; email: *SCOD1@sogerma.eads.net;* Internet: *http://www.sogerma.eads.net.* You may review copies of the referenced service information at the FAA, Transport Airplane Directorate, 1601 Lind Avenue SW., Renton, WA. For information on the availability of this material at the FAA, call 425–227–1221.

Examining the AD Docket

You may examine the AD docket on the Internet at *http://www.regulations.gov;* or in person at the Docket Operations office between 9 a.m. and 5 p.m., Monday through Friday, except Federal holidays. The AD docket contains this proposed AD, the regulatory evaluation, any comments received, and other information. The street address for the Docket Operations office (telephone (800) 647–5527) is in the **ADDRESSES** section. Comments will be available in the AD docket shortly after receipt.

FOR FURTHER INFORMATION CONTACT: Dan Rodina, Aerospace Engineer, International Branch, ANM–116, Transport Airplane Directorate, FAA, 1601 Lind Avenue SW., Renton, Washington 98057–3356; telephone (425) 227–2125; fax (425) 227–1149.

SUPPLEMENTARY INFORMATION:

Comments Invited

We invite you to send any written relevant data, views, or arguments about this proposed AD. Send your comments to an address listed under the **ADDRESSES** section. Include ''Docket No. FAA–2012–1224; Directorate Identifier 2012–NM–112–AD'' at the beginning of your comments. We specifically invite comments on the overall regulatory, economic, environmental, and energy aspects of this proposed AD. We will consider all comments received by the closing date and may amend this proposed AD based on those comments.

We will post all comments we receive, without change, to *http://www.regulations.gov,* including any personal information you provide. We will also post a report summarizing each substantive verbal contact we receive about this proposed AD.

Discussion

The European Aviation Safety Agency (EASA), which is the aviation authority for Member States of the European Community, has issued EASA Airworthiness Directive 2012–0102, dated June 8, 2012 (referred to after this as the Mandatory Continuing Airworthiness Information, or ''the MCAI''), to correct an unsafe condition for the specified products. The MCAI states:

> During a steep climb manoeuvre that was flown with a high pitch (25°) for training of ground threat avoidance, an Airbus A310 aeroplane experienced an uncommanded slide back of the co-pilot seat to the end stop position.
>
> Investigation revealed that on the affected seat, the disc key inside the clutch was broken. SOGERMA Service Bulletin (SB) No 2510112–25–813, which addresses the previous end stop switch issue and which is covered by EASA AD 2010–0070 [which corresponds to FAA AD 2011–06–09, Amendment 39–16634 (76 FR 15805, March 22, 2011)] had been accomplished on this seat, but due to seizure, the key failure was not detected at time. This broken disc key caused a jamming between the gear and the shaft of the clutch. Despite this failure, the torque transmission between the gear and the shaft was sufficient for normal operation, but not to keep the seat in locked position during climbing, due to the high longitudinal loads generated by the high aeroplane incidence.
>
> This condition, if not detected and corrected, could cause the pilot to lose contact with the controls, leading to an inadvertent input on the flight control commands during take-off or climb, possibly resulting in loss of control of the aeroplane.
>
> For the reasons described above, this [EASA] AD requires a one-time inspection [part number (P/N) inspection of the seats and tensile test] of the affected seats and, depending on findings, accomplishment of applicable corrective action(s) [replacing the seat or modifying the seat by replacing actuator P/N RT19H4FX with a new actuator].

You may obtain further information by examining the MCAI in the AD docket.

Relevant Service Information

Airbus has issued Alert Operators Transmission A25W001–12, dated June 6, 2012; and EADS SOGERMA has issued Inspection Service Bulletin

2510112–25–898, dated April 25, 2012. The actions described in this service information are intended to correct the unsafe condition identified in the MCAI.

FAA's Determination and Requirements of This Proposed AD

This product has been approved by the aviation authority of another country, and is approved for operation in the United States. Pursuant to our bilateral agreement with the State of Design Authority, we have been notified of the unsafe condition described in the MCAI and service information referenced above. We are proposing this AD because we evaluated all pertinent information and determined an unsafe condition exists and is likely to exist or develop on other products of the same type design.

Costs of Compliance

Based on the service information, we estimate that this proposed AD would affect about 161 products of U.S. registry. We also estimate that it would take about 1 work-hour per product to comply with the basic requirements of this proposed AD. The average labor rate is $85 per work-hour. Required parts would cost about $4,523 per product. Where the service information lists required parts costs that are covered under warranty, we have assumed that there will be no charge for these parts. As we do not control warranty coverage for affected parties, some parties may incur costs higher than estimated here. Based on these figures, we estimate the cost of the proposed AD on U.S. operators to be $741,888, or $4,608 per product.

Authority for This Rulemaking

Title 49 of the United States Code specifies the FAA's authority to issue rules on aviation safety. Subtitle I, section 106, describes the authority of the FAA Administrator. ''Subtitle VII: Aviation Programs,'' describes in more detail the scope of the Agency's authority.

We are issuing this rulemaking under the authority described in ''Subtitle VII, Part A, Subpart III, Section 44701: General requirements.'' Under that section, Congress charges the FAA with promoting safe flight of civil aircraft in air commerce by prescribing regulations for practices, methods, and procedures the Administrator finds necessary for safety in air commerce. This regulation is within the scope of that authority because it addresses an unsafe condition that is likely to exist or develop on products identified in this rulemaking action.

Regulatory Findings

We determined that this proposed AD would not have federalism implications under Executive Order 13132. This proposed AD would not have a substantial direct effect on the States, on the relationship between the national Government and the States, or on the distribution of power and responsibilities among the various levels of government.

For the reasons discussed above, I certify this proposed regulation:

1. Is not a ''significant regulatory action'' under Executive Order 12866;

2. Is not a ''significant rule'' under the DOT Regulatory Policies and Procedures (44 FR 11034, February 26, 1979);

3. Will not affect intrastate aviation in Alaska; and

4. Will not have a significant economic impact, positive or negative, on a substantial number of small entities under the criteria of the Regulatory Flexibility Act.

We prepared a regulatory evaluation of the estimated costs to comply with this proposed AD and placed it in the AD docket.

List of Subjects in 14 CFR Part 39

Air transportation, Aircraft, Aviation safety, Incorporation by reference, Safety.

The Proposed Amendment

Accordingly, under the authority delegated to me by the Administrator, the FAA proposes to amend 14 CFR part 39 as follows:

PART 39—AIRWORTHINESS DIRECTIVES

1. The authority citation for part 39 continues to read as follows:

Authority: 49 U.S.C. 106(g), 40113, 44701.

§ 39.13 [Amended]

2. The FAA amends § 39.13 by adding the following new AD:

Airbus: Docket No. FAA–2012–1224; Directorate Identifier 2012–NM–112–AD.

(a) Comments Due Date

We must receive comments by January 24, 2013.

(b) Affected ADs

None.

(c) Applicability

This AD applies to Airbus Model A300 B4–601, B4–603, B4–620, B4–622, B4–605R, B4–622R, F4–605R, F4–622R, and C4–605R Variant F airplanes; and Model A310–203, –204, –221, –222, –304, –322, –324, and –325 airplanes; certificated in any category; all manufacturer serial numbers.

(d) Subject

Air Transport Association (ATA) of America Code 25, Equipment/Furnishings.

(e) Reason

This AD was prompted by a report of an uncommanded slide back of the co-pilot seat to the end stop position. We are issuing this AD to detect and prevent unwanted movement of a pilot or co-pilot seat in the horizontal direction, which could lead to inadvertent input on the flight control commands possibly resulting in loss of controllability of the airplane.

(f) Compliance

You are responsible for having the actions required by this AD performed within the compliance times specified, unless the actions have already been done.

(g) Part Number (P/N) Inspection

Within 6 months after the effective date of this AD, except as provided by paragraph (h) of this AD: Do an inspection to determine the part number of each SOGERMA pilot and co-pilot seat installed on the airplane. As an alternative, a review of the maintenance or delivery records may be used to determine the part number of the pilot and co-pilot seat if the part number can be positively determined.

(h) Seats That Have Been Previously Tested or Modified

SOGERMA pilot and co-pilot seats having P/N 2510112 series (all suffixes) or P/N 2510113 series (all suffixes) that, before the effective date of this AD, have already passed the tensile test specified in paragraph (i) of this AD, or have been modified in accordance with the Accomplishment Instructions of EADS SOGERMA Inspection Service Bulletin 2510112–25–898, dated April 25, 2012, are not required to be tested, and are considered to be compliant with the requirements of this AD.

(i) Tensile Test

If, during the inspection required by paragraph (g) of this AD, the part number of a seat is identified as P/N 2510112 series (all suffixes), or P/N 2510113 series (all suffixes): Within 6 months after the effective date of this AD, do a tensile test on that seat in accordance with Airbus Alert Operators Transmission (AOT) A25W001–12, dated June 6, 2012.

(j) Replacement or Modification

If the tensile test sample does not break off while performing the test required by paragraph (i) of this AD, before further flight, do one of the actions specified in paragraph (j)(1) or (j)(2) of this AD.

(1) Replace the affected seat with a new or serviceable seat that has passed the tensile test specified in paragraph (i) of this AD. Do the replacement in accordance with Airbus AOT A25W001–12, dated June 6, 2012.

(2) Modify the seat by replacing actuator P/N RT19H4FX of the affected seat, in accordance with the Accomplishment Instructions of EADS SOGERMA Inspection Service Bulletin 2510112–25–898, dated April 25, 2012; or Airbus AOT A25W001–12, dated June 6, 2012.

(k) Parts Installation Prohibition

As of the effective date of this AD, no person may install a SOGERMA pilot or co-pilot seat having P/N 2510112 series, or P/N 2510113 series, on any airplane unless it has passed the tensile test required by paragraph (i) of this AD, or has been replaced or modified as required by paragraph (j) of this AD.

(l) Other FAA AD Provisions

The following provisions also apply to this AD:

(1) *Alternative Methods of Compliance (AMOCs):* The Manager, International Branch, ANM–116, Transport Airplane Directorate, FAA, has the authority to approve AMOCs for this AD, if requested using the procedures found in 14 CFR 39.19. In accordance with 14 CFR 39.19, send your request to your principal inspector or local Flight Standards District Office, as appropriate. If sending information directly to the International Branch, send it to ATTN: Dan Rodina, Aerospace Engineer, International Branch, ANM–116, Transport Airplane Directorate, FAA, 1601 Lind Avenue SW., Renton, Washington 98057–3356; telephone (425) 227–2125; fax (425) 227–1149. Information may be emailed to: *9-ANM-116-AMOC-REQUESTS@faa.gov*. Before using any approved AMOC, notify your appropriate principal inspector, or lacking a principal inspector, the manager of the local flight standards district office/certificate holding district office. The AMOC approval letter must specifically reference this AD.

(2) *Airworthy Product:* For any requirement in this AD to obtain corrective actions from a manufacturer or other source, use these actions if they are FAA-approved. Corrective actions are considered FAA-approved if they are approved by the State of Design Authority (or their delegated agent). You are required to assure the product is airworthy before it is returned to service.

(m) Related Information

(1) Refer to Mandatory Continuing Airworthiness Information European Aviation Safety Agency, Airworthiness Directive 2012–0102, dated June 8, 2012, and the service information specified in paragraphs (m)(1)(i) and (m)(1)(ii) of this AD, for related information.

(i) Airbus Alert Operators Transmission A300–A25W001–12, dated June 6, 2012.

(ii) EADS SOGERMA Service Bulletin 2510112–25–898, dated April 25, 2012.

(2) For Airbus service information identified in this AD, contact Airbus SAS—EAW (Airworthiness Office), 1 Rond Point Maurice Bellonte, 31707 Blagnac Cedex, France; telephone +33 5 61 93 36 96; fax +33 5 61 93 44 51; email *account.airworth-eas@airbus.com;* Internet *http://www.airbus.com*. For EADS SOGERMA service information identified in this AD, contact EADS SOGERMA, Zone Industrielle de l'Arsenal, CS. 60109, 17303 Rochefort, Cedex France; phone: 33 5 46 82 84 84; fax: 33 5 46 82 88 13; email: *SCOD1@sogerma.eads.net;* Internet: *http://www.sogerma.eads.net*. You may review copies of the referenced service information at the FAA, Transport Airplane Directorate, 1601 Lind Avenue SW., Renton, WA. For information on the availability of this material at the FAA, call 425–227–1221.

Issued in Renton, Washington, on November 30, 2012.

Ali Bahrami,

Manager, Transport Airplane Directorate, Aircraft Certification Service.

[FR Doc. 2012–29710 Filed 12–7–12; 8:45 am]

BILLING CODE 4910–13–P

CONSUMER PRODUCT SAFETY COMMISSION

16 CFR Parts 1112 and 1222

[Docket No. CPSC–2012–0067]

Safety Standard for Bedside Sleepers

AGENCY: Consumer Product Safety Commission.

ACTION: Notice of proposed rulemaking.

SUMMARY: The Danny Keysar Child Product Safety Notification Act, Section 104 of the Consumer Product Safety Improvement Act of 2008 (CPSIA), requires the United States Consumer Product Safety Commission (Commission or CPSC) to promulgate consumer product safety standards for durable infant or toddler products. These standards are to be ''substantially the same as'' applicable voluntary standards or more stringent than the voluntary standard if the Commission concludes that more stringent requirements would further reduce the risk of injury associated with the product. The Commission is proposing a safety standard for bedside sleepers in response to the direction under Section 104(b) of the CPSIA.

DATES: Submit comments by February 25, 2013.

ADDRESSES: Comments related to the Paperwork Reduction Act aspects of the marking, labeling, and instructional literature of the proposed rule should be directed to the Office of Information and Regulatory Affairs, OMB, Attn: CPSC Desk Officer, FAX: 202–395–6974, or emailed to *oira_submission@omb.eop.gov.*

Other comments, identified by Docket No. CPSC–2012–0067, may be submitted electronically or in writing:

Electronic Submissions: Submit electronic comments to the Federal eRulemaking Portal at: *http://www.regulations.gov.* Follow the instructions for submitting comments. To ensure timely processing of comments, the Commission is no longer directly accepting comments submitted by electronic mail (email), except through *www.regulations.gov.* The Commission encourages you to submit electronic comments by using the Federal eRulemaking Portal, as described above.

Written Submissions: Submit written submissions in the following way: Mail/Hand delivery/Courier (for paper, disk, or CD–ROM submissions), preferably in five copies, to: Office of the Secretary, Consumer Product Safety Commission, Room 820, 4330 East West Highway, Bethesda, MD 20814; telephone (301) 504–7923.

Instructions: All submissions received must include the agency name and docket number for this proposed rulemaking. All comments received may be posted without change, including any personal identifiers, contact information, or other personal information provided, to *http://www.regulations.gov.* Do not submit confidential business information, trade secret information, or other sensitive or protected information that you do not want to be available to the public. If furnished at all, such information should be submitted in writing.

Docket: For access to the docket to read background documents or comments received, go to *http://www.regulations.gov*, and insert the docket number, CPSC–2012–0067, into the ''Search'' box and follow the prompts.

FOR FURTHER INFORMATION CONTACT: Douglas A. Lee, Project Manager, Directorate for Engineering Sciences, Consumer Product Safety Commission, 5 Research Place, Rockville, MD 20850; telephone 301–987–2073; email *dlee@cpsc.gov.*

SUPPLEMENTARY INFORMATION:

A. Background and Statutory Authority

The Consumer Product Safety Improvement Act of 2008, (CPSIA, Pub. L. 110–314), was enacted on August 14, 2008. Section 104(b) of the CPSIA, part of the Danny Keysar Child Product Safety Notification Act, requires the Commission to: (1) Examine and assess the effectiveness of voluntary consumer product safety standards for durable infant or toddler products, in consultation with representatives of consumer groups, juvenile product manufacturers, and independent child product engineers and experts, and (2) promulgate consumer product safety standards for durable infant and toddler products. These standards are to be ''substantially the same as'' applicable voluntary standards or more stringent than the voluntary standard if the Commission concludes that more stringent requirements would further

reduce the risk of injury associated with the product. The term ''durable infant or toddler product'' is defined in section 104(f)(1) of the CPSIA as a durable product intended for use, or that may be reasonably expected to be used, by children under the age of 5 years.

In this document, the Commission is proposing a safety standard for bedside sleepers. Bassinets and cradles are specifically identified in section 104(f)(2)(L) as durable infant or toddler products. Bedside sleepers are similar to bassinets, and many bedside sleepers also function as bassinets. In addition, some beside sleepers are accessories to play yards/non-full-size baby cribs. On October 3, 2012, the Commission approved a notice of proposed rulemaking (NPR) for a Safety Standard for Bassinets and Cradles (*http://www.cpsc.gov/library/foia/foia12/brief/bassinetnpr.pdf*). The Commission has issued a Safety Standard for Play Yards, codified at 16 CFR part 1221. Recently the Commission has proposed specific language to address hazards due to misassembly of play yard bassinet accessories in a notice of proposed rulemaking (77 FR 52272, August 29, 2012). This proposed rule, if finalized, would amend the Safety Standard for Play Yards. The proposed rule for beside sleepers would adopt many of the requirements in the proposed NPR for bassinets, as well as address the hazards associated with the use of bassinet play yard accessories that can be assembled with missing key structural requirements for bedside sleeper play yard accessories.

Pursuant to Section 104(b)(1)(A), the Commission consulted with manufacturers, retailers, trade organizations, laboratories, consumer advocacy groups, consultants, and members of the public in the development of this proposed standard, largely through the ASTM process. The proposed standard is based on the voluntary standard developed by ASTM International (formerly the American Society for Testing and Materials), ASTM F2906–12, ''Standard Consumer Safety Specification for Bedside Sleepers'' (ASTM F2906–12), with additions to make the standard more stringent. The ASTM standard is copyrighted, but it can be viewed as a read-only document, only during the comment period on this proposal, at: *http://www.astm.org/cpsc.htm*, by permission of ASTM.

B. The Product

ASTM F2906–12 defines ''bedside sleeper'' as ''a rigid frame assembly that may be combined with a fabric or mesh assembly, or both, used to function as sides, ends, or floor or a combination thereof, and that is intended to provide a sleeping environment for infants and is secured to an adult bed.'' A ''multi-mode product'' is ''a unit that is designed and intended to be used in more than one mode (for example, a play yard, bassinet, changing table, hand held carrier, or bedside sleeper).'' A bedside sleeper is intended to be secured to an adult bed that permits newborns and infants to sleep close by an adult without being in the adult bed. In current products, the horizontal sleep surface is typically 1 inch to 4 inches below the level of the adult bed's mattress. The side of the bedside sleeper that is adjacent to the adult bed can usually be lowered, thereby differentiating bedside sleepers from bassinets, where all four sides of a bassinet are the same height. Bedside sleepers are intended for use with children up to the developmental stage where they can push up on hands and knees (about 5 months). This is the same developmental range for the intended users of bassinets. Current bedside sleepers range in size from about 35″ x 20″ to 40″ x 30.″ They may have rigid sides, but they are most commonly constructed with a tube frame covered by mesh or fabric.

Freestanding bassinets are not covered under the proposed standard for bedside sleepers. They are covered under ASTM F2194–12a, ''Standard Consumer Safety Specification for Bassinets and Cradles.''

Several manufacturers produce multiuse (or multimode) bedside sleeper products that convert into bassinets and/or play yards. Most bedside sleeper products can be converted into a bassinet by raising the lowered side to have four equal-height sides, and a few also convert into a bassinet and play yard. Some play yards include bedside sleeper accessories which, when attached, convert the play yard into a bedside sleeper; and some bassinets convert into bedside sleepers. All of the tube-framed products that have been evaluated by CPSC staff may be collapsed for storage and transport. A bedside sleeper that can be used in additional modes would need to meet each applicable standard. For example, a bedside sleeper product that converts into a play yard and a bassinet would have to meet: ASTM F2906 bedside sleeper requirements, ASTM F2194 bassinet requirements (except for height of the fourth lowered side for bedside sleepers) and sections of the ASTM F406 play yard requirements applicable to bassinets when in the bedside sleeper mode; ASTM F406 play yard requirements when in play yard use mode; and ASTM F2194 bassinet requirements and applicable sections of ASTM F406 play yard requirements when in bassinet mode.

To ensure consistency with the existing and proposed standards for bassinets and play yards, the Commission is proposing additions to the scope and performance requirements of a bedside sleeper, as discussed below.

C. The Voluntary Standard—ASTM F2906

ASTM first published a voluntary standard for bedside sleepers, ASTM F2906–11, in December 2011. It required bedside sleepers to meet the voluntary standard requirements of the product upon which it was based, either a play yard/non-full-size baby cribs, ASTM F406 (play yard standard) or a bassinet, ASTM F2194 (bassinet standard). The standard also addressed hazards specific to bedside sleeper products. It addressed incidents involving the creation of a hazardous gap between the product and an adult mattress, by requiring the successful completion of three disengagement tests. The tests ensured that the securing components can withstand forces that may be exerted on the product by either the child or an adult, while sleeping. The gap must be no more than 0.5 in. when the product is installed to the adult bed, per manufacturer's directions. When a 25-lb. horizontal force is applied near the attachment system or corners, the gap may not exceed 1.0 in. And, to simulate an adult rolling into a bedside sleeper while sleeping, a gap greater than 1.0 in. may not be created after the application and release of a 50-lb. horizontal force to the bedside sleeper's corners. The inclusion of these anti-gap requirements served to mitigate the foreseeable head and neck entrapment hazards posed by bedside sleepers. The standard requires a minimum 4-inch lowered side height over which a child is unlikely to be able to roll. In addition, latching and locking devices are evaluated to prevent unintentional movement of the side that lowers and to ensure overall product integrity.

In 2012, the standard for bedside sleepers was changed from meeting either ASTM F406 (play yard standard) or ASTM F2194 (bassinet standard), to require all products to meet ASTM F2194 only. The bassinet minimum side-height requirement (the upper surface of the non-compressed mattress of a bassinet/cradle must be at least 7.5 inches lower than the upper surface of the lowest side in all intended bassinet/cradle use positions) is also required for

beside sleepers, with the exception of a lowered side rail (the height of the side rail in the lowest position shall be no less than 4 inches when measured from the top of the uncompressed bedside sleeper mattress to the top of the lowered side rail, when the mattress support is in its highest position.) Bedside sleepers and bassinets share a significant number of hazard patterns because they are used by children with the same developmental abilities and for the same purpose. Many bedside sleepers also function as bassinets. By requiring beside sleepers to be tested to ASTM F2194 (bassinets) rather than to ASTM F406 (play yards), ASTM made the bedside sleeper standard more stringent because there are bedside sleeper hazards covered by the bassinet standard but that are not covered by the play yard standard. Additionally, ASTM F406 requires a bassinet accessory on a play yard structure to meet the applicable sections of the play yard voluntary standard. These changes were incorporated into ASTM F2906–12, ''Standard Consumer Safety Specification for Bedside Sleepers,'' in July 2012.

CPSC staff also reviewed mandatory and voluntary international standards in Canada, the European Union, Australia, and New Zealand. There are some international standards governing safe sleep products for infants; however, there are no specific requirements that address the hazards unique to bedside sleeper products. Canada has a mandatory standard for cribs, cradles, and bassinets, SOR/2010–26; the European Union uses *EN 1130 Cribs and Cradles* and *EN 12790 Child Care Articles—Reclined Cradles* to assess and market various design elements and structures in bedside sleeper products. In Australia and New Zealand, several standards exist for safe sleep products–AS/NZS 2172:2003 *Cots* (full-size and non-full-size cribs that do not fold); AS/NZS 2195:1999 *Folding Cots* (play yards and folding cribs of any size); AS/NZS 4385:1996 *Infants' Rocking Cradles* (cradles and bassinets that tilt.)

The Juvenile Products Manufacturers Association (JPMA) has a certification program for a variety of juvenile products, including bassinets and play yards. Manufacturers that voluntarily obtain JPMA certification submit products to an independent test laboratory for conformance testing to the most recent version of the voluntary standard. Manufacturers have 6 months after publication of a new or revised standard to certify products to the new requirements. Currently, JPMA does not have a certification program for bedside sleepers, and no firm claims to meet the ASTM voluntary standard, ASTM F2906–12. However, three firms supply multimode products, where one mode is compliant with the associated ASTM voluntary standard. Two firms claim compliance with the ASTM standard for bassinets; one firm is JPMA-certified as compliant, and the other claims compliance with the ASTM bassinet standard. A third firm supplies play yards that are JPMA-certified as compliant with the ASTM play yard/non-full-size crib standard.

D. Incident Data

CPSC staff identified 40 cases of bedside sleeper-related incidents from 2001 to 2011. The CPSC databases searched were the In-Depth Investigation database, the Injury or Potential Injury Incident database, and the Death Certificate file. National estimates of bedside sleeper product-related injuries are not available because the National Electronic Injury Surveillance System (NEISS) data does not allow for clear identification of bedside sleepers. Therefore, the risk of injury associated with the number of products in use cannot be calculated.

CPSC staff is aware of four fatalities and 36 nonfatal incidents (with and without injuries) related to bedside sleepers that were reported from January 2001 through December 2011. Bedside sleepers have been on the market since 1997. During this time, there have been two recalls for product defects that created a substantial product hazard. One recall involved four deaths, three from head entrapment and one from suffocation, and several complaints on the same entrapment hazard from a bedside sleeper with a bassinet base. This recall involved 3-in-1 and 4-in-1 convertible bassinets that contained metal bars covered by an adjustable fabric flap, attached with Velcro,® that folded down when the bassinet was converted into a bedside sleeper. If the Velcro® was not resecured properly when the flap was adjusted, an infant could slip through the opening and become entrapped in the metal bars and suffocate. Because of additional incidents, this recall was re-announced three times. There were 900,000 units recalled. The second recall involved a bedside sleeper with a play yard base. There were 10 reports of infants falling from the mattress into the bottom of a bedside sleeper or becoming entrapped between the edge of the mattress and the side of the bedside sleeper. There were 76,000 units recalled. Details of the recalls can be found on the cpsc.gov Web site.

1. Fatalities

All four reported fatalities involved the same brand of recalled bedside sleeper/bassinet. In all four cases, the product was being used in the bassinet mode, with the adjustable side raised at the time of the incident. Three of the deaths were due to entrapment and/or hanging, which resulted after an infant's body, but not head, slipped through the fabric covering and underlying structural components of a particular brand of bedside sleeper. In two of these three fatalities involving a 4-month-old and a 6-month-old decedent, the infant's head was entrapped between the lower horizontal bars (of the adjustable side) and the top of the mattress. The fabric flap designed to cover the metal bars was not in place. In the third fatality, the fabric flap covering the adjustable side was not secured to the permanent fabric siding, and the horizontal bars of the adjustable side were broken/missing. As a result, the 6-month-old decedent's body slipped out through an opening in the fabric siding, but her chin/throat got caught on a lower crossbar. The fourth death occurred when an infant moved into a corner where the fabric covering the adjustable side was not secured by the Velcro® strip and the bassinet was also missing the lower rail. This created a pocket between the side and bassinet floor. The infant was found with their head in the pocket and face against the side of the bassinet, resulting in suffocation.

2. Nonfatal Incidents

Of the 36 nonfatal incidents, there were three reported injuries involving infants, none hospitalized, during the use of a bedside sleeper. All of the injured infants were under 5 months of age, which is within the ASTM recommended user age range. Two of the infants suffered bruising when they were entrapped between the metal rungs of the same product that had caused three of the fatalities described in the previous section. The third injury occurred when the infant rolled into a position where his neck was hyperextended into a non-breathable corner of the product, and he suffered respiratory difficulties. In all three cases, the caregiver was nearby to prevent any serious consequences.

The remaining 33 reports indicated that no injury occurred or provided no information about any injury. However, many of the descriptions in the reports indicated the potential for a serious injury, or even death, in bedside sleepers. In cases where victim age was reported, six reported ages between 6

months and 8 months old; the other infants were under 5 months of age.

3. Hazard Pattern Analysis

CPSC staff considered all 40 incident reports to identify the hazard patterns associated with bedside sleeper-related incidents. The hazard scenarios in 24 of the 40 incidents (60 percent) reported were attributed to some sort of failure/defect or a potential design flaw in the product. This category includes the four fatalities and three non-hospitalized injuries. Listed below are the reported problems, beginning with the most frequently reported concerns:

- A problem with the adjustable fabric cover over the horizontal metal bars on the side that lowers in the bedside sleeper mode was responsible for nine of the reported incidents. These included all four fatalities and two of the injuries. All of these incidents involved one particular manufacturer's bedside sleeper/convertible bassinet product, which was recalled in 2008. Two of the fatalities occurred before the CPSC recall; the third, which involved a secondhand product in poor condition, occurred after the 2008 recall, but prior to the 2009 recall (which was an expansion of the 2008 recall). Between the two injuries, one occurred prior to the 2008 recall, while the other occurred after that recall. Neither of the post-recall incident reports indicated whether the consumers were aware of the recall.
- Issues with assembly instructions were identified in six reported incidents. In all of these reports, the consumer had misassembled the product but reported the product as being faulty. None of the incidents resulted in any injury or fatality. All but one of these incidents involved one particular manufacturer's bedside sleeper, which was recalled in 2011.
- Miscellaneous other product-related issues, such as non-levelness of the product (two reports), instability of leg extensions (two reports), poor design (two reports), broken component (one report), failure of the attachment (to adult bed) mechanism (one report), and unclear age labeling (one report) were reported in the remaining incident reports. One incident reported an injury associated with poor product design.
- In response to CPSC recall notices, there were 16 non-incident reports of concerns or complaints. In these reports, the consumer either sought advice on options regarding a bedside sleeper product they owned that had been recalled, or they inquired about whether the product they owned was within the scope of the recall.

E. Proposed Changes to ASTM F2906–12

CPSC staff identified 24 incidents due to defect or potential design flaws in the product. The hazards associated with these incidents included: Issues with the adjustable fabric cover over the metal bars on the side that lowered in the bedside sleeper mode (9 incidents); poor assembly instruction (6 incidents); and miscellaneous other product-related issues (9 incidents). To address these incidents, the Commission proposes to adopt by reference, ASTM International's voluntary standard, ASTM F2906–12, *Standard Consumer Safety Specification for Bedside Sleepers,* with a few additions to strengthen the standard. Section 5 (Performance Requirements) of ASTM F2906–12 requires that in addition to the tests provided in ASTM F2906–12, the bedside sleeper must be tested to the bassinet standard (ASTM F2194). Specifically, section 5.1 provides that:

> Prior to or immediately after testing to this consumer safety specification, the bedside sleeper must be tested to Consumer Safety Specification F2194. Multi-mode products must also be tested to each applicable standard. When testing to Consumer Safety Specification F2194 the unit shall be free standing, and not be secured to the test platform as dictated elsewhere in this standard.

Because bedside sleepers already are required to be tested to the applicable bassinet standard requirements, and multimode products, to each applicable standard, the Commission proposes in this rule to add clarifying language to ensure that the requirements that are not yet included in an existing standard or proposed in an NPR (*i.e.,* ASTM F406–12a (play yards) and ASTM F2194–12 (bassinets)) are also included in ASTM F2906–12 (bedside sleepers).

1. Fabric-Sided Enclosed Openings

The current version of ASTM F2194–12a (bassinets) contains a *Fabric-Sided Enclosed Openings'* performance requirement for bassinets. This requirement prohibits completely bounded openings large enough to permit passage of an infant's torso. The hazard scenarios addressed by this requirement encompass the three strangulation deaths described above and a related, foreseeable suffocation hazard. These hazards occur when a child passes through an opening, either becomes trapped between the liner and mattress pad and suffocates, or becomes suspended by the neck, and then strangles. This hazard, associated with a recall of 900,000 units, led to three of the four fatalities on a bassinet that converts to a bedside sleeper. The bassinet test procedure (ASTM F2194–12a, section 7.8) attempts to push a torso probe the size of a 5th percentile infant through bounded openings with 20 lbs of force. The test is first performed with product assembled per the manufacturer's instructions. If the product has a removable cover, it is performed a second time after all fasteners or snaps are unfastened, but the removable cover left in place. In doing so, the test intentionally replicates the incorrectly secured fabric liner hazard scenario of the fatal incidents.

A manufacturer's bedside sleeper accessory exhibited this hazard, which led to its recall in 2011. The recall was initiated in response to incident reports in which the bedside sleeper accessory's removable cover (liner or shell) was either not used, or was present but not secured to the play yard frame. This bedside sleeper accessory can also be used as a play yard, or a bassinet accessory to a play yard. When in the bassinet accessory position, the front side of the product can be lowered, transforming it into the beside sleeper mode. A 1½ year-old unused sample of this product was recently retested by CPSC staff, confirming that it fails the ASTM F2194 fabric-sided enclosed opening requirement. However, a new sample of a similar model from the same manufacturer passed this test. Staff identified two possible reasons for testing variances. One explanation is that the fit of the shell to the play yard frame becomes looser with repeated assembly and disassembly. The other reason is that the seam joining the mesh and fabric part of the liner may be in a slightly different location on some models. The seam may cause sufficient friction on the torso test probe during force testing on some models. Accordingly, minor changes in materials or construction may not be sufficient to remedy the hazard presented by the fabric-sided, bounded opening hazard.

Under section 6.7 of ASTM F2194–12, for bassinets/cradles with fabric sides, a completely bounded opening may not be created that allows the complete passage of the torso probe (based on a torso diameter of a 5th percentile 0 to 2-month-old infant) when tested in accordance with the fabric release test methods for enclosed openings. However, the test does not apply to play yard bassinets or play yard accessories. Bassinets accessories to play yards (that cannot be converted to bedside sleepers) are usually held in place by fasteners that clip to the top of the play yard's railing. If the fasteners were left unclipped, the bassinet would fall, rendering the product untestable, due to

the complete collapse of the bassinet attachment; test labs would likely consider that a failure. However, for bassinets that convert to a bedside sleeper with a lowered side, CPSC staff determined that all bedside sleeper play yard accessories should be subject to the requirements of the ASTM F2194–12 bassinet standard's section 6.7 *Fabric-Sided Enclosed Opening* without the exemption for bassinet play yard accessories, given the demonstrated hazards presented when a bedside sleeper's removable cover (liner or shell) is either not used, or not secured properly.

The Commission proposes additional language for the ASTM F2906 bedside sleeper standard to add a new definition for ''bedside sleeper accessory'' and eliminate the fabric-sided bounded opening performance requirement exemption currently granted to play yard bassinet accessories. Unlike bassinet play yard accessories, bedside sleeper (or a bassinet that is converted into a bedside sleeper) play yard accessories could have fasteners left unclipped (through the detachment of snaps/Velcro) where the bedside sleeper with the lowered side does not completely collapse. Because the bedside sleeper could still appear functional, the Commission proposes to add language under Section 3 (Terminology) of ASTM F2906–12. The new proposed section 3.1.8 would state: ''*bedside sleeper accessory,* n—an elevated sleep surface that attaches to a non-full-size crib or play yard, designed to convert the product into a bedside sleeper intended to have a horizontal sleep surface while in a rest (non-rocking) position.'' The Commission also proposes to add a new proposed section 5.7, stating: ''a *Bedside Sleeper Accessory Fabric-Sided Enclosed Openings*—A bedside sleeper accessory shall meet the F2194 performance requirement ''*Fabric-Sided Enclosed Openings.''* Under new proposed section 5.7.1, bedside sleeper accessories would be exempt from this requirement if either of the following two conditions were met after disengaging all fasteners between the accessory and the non-full-size crib or play yard base to which it is assembled: (1) The bedside sleeper accessory collapses under its own weight, such that any part of the mattress pad contacts the bottom floor of the non-full-size crib or play yard (5.7.1.1); or (2) the bedside sleeper accessory's sleep surface tilts by more 30 degrees (5.7.1.2). These requirements are also consistent with the proposed requirements in the NPR for the Safety Standard for Play Yards for play yard bassinet accessory misassembly provisions, which require all key structural elements to be attached permanently to the bassinet shell. The second method of compliance is to meet a catastrophic failure test, where a missing key structural element makes the product collapse completely or tilt more than 30 degrees. 77 FR 52273.

2. Consumer Misassembly With Missing Components

The Commission proposed a requirement to address consumer misassembly of key structural elements for bassinet accessories to play yards in the NPR for the Safety Standard for Play Yards, 77 FR 52272. However, the NPR for play yards did not include specific language for bedside sleeper play yard accessories. Although section 5 (Performance Requirements) of ASTM 2906–12 provides that bedside sleepers must be tested to ASTM F2194 (bassinets), and multimode products must also be tested to each applicable standard, the Commission proposes to add language to ASTM 2906–12 (bedside sleepers) to make explicit that the requirements for addressing consumer misassembly of key structural elements is required for bedside sleeper play yard accessories in addition to bassinet play yard accessories.

As described at length in the NPR for the Safety Standard for Play Yards, 77 FR 52272, omission of key structural elements of a bassinet assembly (such as rods, tubes, bars, and hooks that keep the sleep surface flat and level) could result in a tilt in the sleeping surface and put the infant in a position where he or she is unable to breathe and is at risk of suffocation. This hazard is magnified should these misassembled products be used as an unsupervised sleep environment, another reasonably foreseeable scenario. Similarly, a misassembled bedside sleeper play yard accessory may not be readily apparent or obvious to the consumer. If the misassembled accessory supports an infant without a catastrophic and obvious change to the sleep surface, a consumer may continue to use the misassembled accessory and inadvertently place a child in danger. Bedside sleeper accessories and bassinet accessories incorporate very similar designs and manufacturing processes (because many bedside sleepers also function as bassinets), and many of the same performance requirements are applicable to both products. Accordingly, in order to ensure that all of the hazards associated with bedside sleeper play yard accessories and bassinet play yard accessories that can be assembled missing key structural elements are addressed, the Commission proposes to add under section 5 (Performance Requirements) to ASTM F2906–12, new proposed section 5.8 *Bedside Sleeper Play Yard Accessories Missing Key Structural Elements.* The new section 5.8 will provide: A bedside sleeper accessory shall meet the F406 general requirement, ''Bassinet/Cradle Accessories Missing Key Structural Elements.''

3. New Requirements for Bassinets

ASTM F2906–12 already requires bedside sleepers to meet the requirements of the bassinet standard, ASTM F2194 ''Standard Consumer Product Safety Specification for Bassinets and Cradles,'' with the exception of the height of the lowered fourth side. Most bedside sleepers also function as bassinets. The intended users are identical, and the majority of the hazards are identical. The Commission's proposed modifications to address bassinet hazards in ASTM F2194–12 have been discussed in great detail in the NPR and in the Bassinet NPR staff briefing package. Specifically, the Commission proposed four changes to the ASTM bassinet standard. Three of those proposed changes to the bassinet standard would also be applicable to bedside sleepers. The fourth proposed change would update the scope and corresponding terminology specific to bassinets under ASTM F2194, and it is not applicable to bedside sleepers. Three of the proposed requirements that would apply to bedside sleepers include: (1) Segmented Mattress Flatness Requirement and Test Method; (2) Removable Bassinet Bed Stability; and (3) Stability Test Dummy. Because bedside sleepers are already required to be tested to the bassinet standard, ASTM F2194, there is no need to add language to the bedside sleeper standard proposing these requirements and test methods. Accordingly, if the proposed changes to ASTM F2194 are finalized, bedside sleepers will also be required to meet the following requirements and test methods in addition to all other applicable requirements in ASTM F2194. The following proposed changes to the bassinet standard would also be applicable to bedside sleepers:

A. Proposed Segmented Mattress Flatness Requirement and Test Method (Sections 6.9 and 7.10 of ASTM F2194–12a)

In order to address the hazard of suffocation/positional asphyxia due to an excess mattress pad angle, the Commission proposed performance requirements and a test method for the

minimum flatness of mattress surfaces. This requirement would apply to segmented mattresses, such as those seen in a bassinet accessory to a play yard. The Commission proposed that the segmented mattresses commonly used in play yards shall not create an angle greater than 10 degrees when tested using a 17-pound cylinder to simulate the weight of a 6-month-old infant. This performance requirement and test method would also apply to a segmented mattress used in a bedside sleeper accessory to a play yard.

B. Proposed New Performance Requirement and Associated Definitions To Address Hazards Associated With the Stability of Removable Bassinet Beds (Sections 3.1.3, 3.1.17, 3.1.18, 3.1.19, 3.1.20, 6.10, 7.11 of ASTM F2194–12a)

In order to address hazards associated with misassembly of removable bassinet beds, the Commission proposed performance requirements and a test method for products that have bassinet beds that attach to an elevated stand. The requirements would apply to removable bassinet beds that are designed to separate from the stand/base without the use of tools. The Commission proposed that if a removable bassinet bed is not properly attached or assembled to its base, it must meet one of the following requirements:

- The base/stand shall not support the bassinet (*i.e.,* the bassinet bed falls from the stand so that it is in contact with the floor); or
- The lock/latch shall automatically engage under the weight of the bassinet bed (without any other force or action); or
- The stand/base shall not be capable of supporting the bassinet bed within 20 degrees of horizontal; or
- The bassinet shall contain a visual indicator mechanism that shall be visible on both sides of the product; or
- The bassinet bed shall not tip over and shall retain the CAMI newborn dummy when subjected to the stability test outlined in the standard.

These requirements are equally applicable to removable bedside sleepers that are designed to separate from the stand/base without the use of tools.

C. Proposed Revised Test Procedure for Bassinet Stability (Sections 2.3 and 7.4.4 of ASTM F2194–12a)

During evaluations of the test methods for removable bassinet beds, CPSC staff made comparisons of the stability of products weighted with the newborn CAMI dummy (7.45 lbs) as opposed to the infant CAMI dummy (17.5 lbs). ASTM F 2194–12 contains a stability requirement that uses the heavier infant CAMI dummy. Use of the newborn CAMI, which is readily available to test labs and represents the 50th percentile newborn, would result in a more conservative stability test. In addition, bassinets are intended for use with newborns. Accordingly, the Commission proposed a revised test procedure for bassinet stability that uses a newborn CAMI instead of an infant CAMI. This test procedure is equally applicable to removable beside sleepers that are designed to separate from the stand/base without the use of tools because they too are intended for use with newborns.

F. Effective Date

The Administrative Procedure Act (APA) generally requires that the effective date of the rule be at least 30 days after publication of the final rule. 5 U.S.C. 553(d). To allow time for bedside sleepers to come into compliance, the Commission proposes that the standard would become effective 6 months after publication of a final rule in the **Federal Register**. The Commission invites comment on how long it will take bedside sleeper manufacturers to come into compliance with the rule.

G. Regulatory Flexibility Act

1. Introduction

The Regulatory Flexibility Act (RFA), 5 U.S.C. 601–612, requires agencies to consider the impact of proposed rules on small entities, including small businesses. Section 603 of the RFA requires that the Commission prepare an initial regulatory flexibility analysis and make it available to the public for comment when the notice of proposed rulemaking is published. The initial regulatory flexibility analysis must describe the impact of the proposed rule on small entities and identify any alternatives that may reduce the impact. Specifically, the initial regulatory flexibility analysis must contain:

- A description of, and where feasible, an estimate of the number of small entities to which the proposed rule will apply;
- A description of the reasons why action by the agency is being considered;
- A succinct statement of the objectives of, and legal basis for, the proposed rule;
- A description of the projected reporting, recordkeeping, and other compliance requirements of the proposed rule, including an estimate of the classes of small entities subject to the requirements and the type of professional skills necessary for the preparation of reports or records; and
- An identification, to the extent possible, of all relevant federal rules that may duplicate, overlap, or conflict with the proposed rule.

In addition, the initial regulatory flexibility analysis must contain a description of any significant alternatives to the proposed rule that would accomplish the stated objectives of the proposed rule and, at the same time, reduce the economic impact on small businesses.

2. The Market

Typically, bedside sleepers are produced and/or marketed by juvenile product manufacturers and distributors. Currently, there are at least five known manufacturers supplying bedside sleepers to the U.S. market. Four are domestic manufacturers, including one manufacturer that dominates the market. The fifth is a foreign manufacturer who ships products directly to the United States. There may be additional unknown small manufacturers and importers operating in the U.S. market as well.

Under U.S. Small Business Administration (SBA) guidelines, a manufacturer of bedside sleepers is small if it has 500 or fewer employees, and an importer is considered small if it has 100 or fewer employees. Based on these guidelines, all four domestic manufacturers known to be supplying the U.S. market are small.

The Juvenile Products Manufacturers Association (JPMA), the major U.S. trade association that represents juvenile product manufacturers and importers, runs a voluntary Certification Program for several juvenile products. Under this program, products voluntarily submitted by manufacturers are tested against the appropriate ASTM standard, and only passing products are allowed to display JPMA's Certification Seal.

Currently, JPMA does not have a Certification Program for bedside sleepers, and no firm claims to meet the ASTM bedside sleeper voluntary standard. However, three firms supply multimode products where one mode is compliant with the associated ASTM voluntary standard. Two firms claim compliance with the ASTM standard for bassinets; one firm is JPMA-certified as compliant, and the other claims compliance with the ASTM bassinet standard. A third firm supplies play yards that are JPMA-certified as compliant with the ASTM play yard/non-full-size crib standard.

National estimates of bedside sleeper product-related injuries are not available because the National Electronic Injury Surveillance System (NEISS) data does not allow for clear identification of bedside sleepers. Therefore, the risk of injury associated with the number of products in use cannot be calculated.

3. Compliance Requirements of the Proposed Rule

Although all bedside sleepers currently on the market will require some modification in order to meet the voluntary standard, several of these requirements would impose little to no burden on manufacturers because firms also must comply with similar requirements in existing voluntary standards.

Several modifications of the product may be required. The lowered side of the bedside sleeper must be 4 inches. The height requirement for sides that cannot be lowered is identical to that of bassinets, 7½ inches. This requirement is not expected to pose a substantial cost for firms. However, it is possible that a few firms will need to modify their product in order to comply. Some products will need to add a permanent fourth side, and some may need to raise the fourth side so that it meets the minimum 4-inch side height.

ASTM F2906–12 requires that the gap between the bedside sleeper and adult bed should not be more than a ½ inch when the bedside sleeper is secured to the bed. Firms may need to modify the attachment system to meet the minimum requirement by adjusting the anchor and/or straps to reduce stretching and to limit slippage. Alternatively, firms may opt to redesign their attachment system. Cost should be minimal if no new materials are used.

Some products will require some modification in order to meet the two proposed bedside sleeper accessory requirements. The Commission proposes that the bedside sleeper accessory would be required to meet the (1) fabric sided opening requirement and (2) consumer misassembly requirement. In order to comply with the fabric opening requirement, the bedside sleeper accessory must pass the torso probe test. Alternatively, when the fabric-sided liner is unsecured, the bedside sleeper accessory should either collapse under its own weight or the sleep surface should tilt by more than 30 degrees. The proposed consumer misassembly requirement is identical to the play yard bassinet misassembly requirement proposed in the NPR for the Safety Standard for Play Yards. The Commission proposes that a bedside sleeper accessory that can be assembled and attached to the play yard with any of the key structural elements missing must either: (1) Have all key structural components permanently attached or (2) be obviously unusable when attached to the play yard with any key structural element removed. The bedside sleeper accessory, if misassembled, should provide visual cues, such as the mattress pad contacts the bottom floor of the non-full-size crib or play yard, or the sleep surface angle tilts by more than 30 degrees to indicate misassembly. The actual cost of meeting these proposed requirements to manufacturers is unknown, but it could be minimal, primarily involving additional stitching, rivets, and other methods of attachment. However, if product redesign is required, the costs could be significant.

The proposed bassinet requirements that are also applicable to bedside sleepers—mattress and stability requirements—are expected to have little to no incremental impact on firms. These requirements are identical to requirements in the bassinet NPR for Safety Standard for Bassinets and Cradles and the cost of meeting those requirements was accounted for in the bassinet NPR. If these requirements are finalized as proposed, a manufacturer who produces a bedside sleeper and a bassinet combination product would already need to meet these requirements and would have incurred the associated costs under the bassinet standard. As a consequence, meeting the same requirements under a bedside sleeper standard would impose no additional burden. Most bedside sleeper manufacturers produce such a combination product. In addition, firms would need to revise current warning labels to include a description of correct assembly and conversion modes. This represents a minor modification.

4. Other Federal or State Rules

The Commission is in the process of implementing sections 14(a)(2) and 14(i)(2) of the Consumer Product Safety Act (CPSA), as amended by the CPSIA. Section 14(a)(2) of the CPSA requires every manufacturer of a children's product that is subject to a children's product safety rule to certify, based on third party testing, that the product complies with all applicable safety rules. Section 14(i)(2) of the CPSA requires the Commission to establish protocols and standards (i) for ensuring that a children's product is tested periodically and when there has been a material change in the product, (ii) for the testing of representative samples to ensure continued compliance, (iii) for verifying that a product tested by a conformity assessment body complies with applicable safety rules, and (iv) for safeguarding against the exercise of undue influence on a conformity assessment body by a manufacturer or private labeler.

Because bedside sleepers will be subject to a mandatory standard, they will also be subject to the third party testing requirements of section 14(a)(2) of the CPSA when the mandatory standard and the notice of requirements become effective.

5. Impact on Small Businesses

There are five firms known to be marketing bedside sleepers in the United States. One is a foreign manufacturer. The analysis applies to the four domestic firms, all of which are small. The impact of the standard on manufacturers depends on two factors: (1) Whether their products are multiuse products and are already in compliance with one or more existing voluntary (or mandatory) standards; and (2) the proportion of their total sales or revenue that bedside sleepers constitute.

Three of the four domestic manufacturers produce a multiuse product, or a product that may be used as a bedside sleeper, as well as a play yard or bassinet. These multiuse products are already in compliance with an existing standard, and there is significant overlap between standards. It is likely that manufacturers will need to make only slight, if any, modifications to comply with the bedside sleeper standard. The three producers of multiuse products are unlikely to experience a significant impact.

Two of the domestic manufactures rely almost solely on the sales of bedside sleepers as their revenue source. One of the firms produces a multiuse product that is in compliance with an existing voluntary standard, as described above, and should not experience a significant impact. The other firm, however, produces a product that serves only as a bedside sleeper. The costs of compliance for this firm are unknown but could be significant if a complete product redesign is required. In addition, the impact could be magnified because most of this firm's revenues are due to the sales of bedside sleepers.

All manufacturers will need to modify existing warning labels. A new warning label poses a small burden because it represents a minor modification. Costs associated with the new warning label would be low because no new materials are used. Once the final rule and notice of requirements are in effect, all manufacturers will be subject to third

party testing and certification requirements.

6. Alternatives

Under the Danny Keysar Child Product Safety Notification Act, section 104 of the CPSIA, one alternative that would reduce the impact on small entities is to make the voluntary standard mandatory with no modifications. Adopting the current voluntary standard without any changes potentially would reduce costs for manufacturers. Three of the four small manufacturers who are already compliant with a voluntary standard would have a reduced burden. However, all firms still require some product changes in order to meet the voluntary standard. Because the staff's proposed changes add little to the overall burden, adopting the voluntary standard with no changes will not significantly offset the burden.

A second alternative would be to set an effective date later than the staff-recommended 6 months. This would allow suppliers additional time to modify and/or develop compliant bedside sleepers and spread the associated costs over a longer period of time.

H. Environmental Considerations

The Commission's regulations address whether we are required to prepare an environmental assessment or an environmental impact statement. If our rule has ''little or no potential for affecting the human environment,'' it will be categorically exempted from this requirement. 16 CFR 1021.5(c)(1). The proposed rule falls within the categorical exemption.

I. Paperwork Reduction Act

This proposed rule contains information collection requirements that are subject to public comment and review by the Office of Management and Budget (OMB) under the Paperwork Reduction Act of 1995 (44 U.S.C. 3501–3521). In this document, pursuant to 44 U.S.C. 3507(a)(1)(D), we set forth:

- A title for the collection of information;
- A summary of the collection of information;
- A brief description of the need for the information and the proposed use of the information;
- A description of the likely respondents and proposed frequency of response to the collection of information;
- An estimate of the burden that shall result from the collection of information; and
- Notice that comments may be submitted to the OMB.

Title: Safety Standard for Bedside Sleepers.

Description: The proposed rule would require each bedside sleeper to comply with ASTM F2906–12, Standard Consumer Safety Specification for Bedside Sleepers. Sections 7.1, 8.1, and 8.2 of ASTM F2906–12 contain requirements for marking, labeling, and instructional literature that are disclosure requirements, thus falling within the definition of ''collections of information'' at 5 CFR 1320.3(c). Section 7.1 of ASTM F2906–12 requires that all bedside sleeper products meet with the marking and labeling instructions of ASTM F2194, *Standard Consumer Safety Specification for Bassinets and Cradles.* Section 8.1 of ASTM F2194–12 requires:

- The name and the place of business (city, state, mailing address including Zip code) or telephone number of the manufacturer, importer distributor, or seller; and
- A code mark or other means that identifies the date (month and year as a minimum) of manufacture.

Section 8.1 of ASTM F2906–12 requires that all bedside sleeper products comply with the instructional literature requirements of ASTM F2194, Standard Consumer Safety Specification for Bassinets and Cradles. Section 9.1 of ASTM F2194–12a requires all firms supplying bedside sleepers to provide easy-to-read and understand instructions regarding assembly, maintenance, cleaning, operating, and adjustments, where applicable. Section 8 of ASTM F2906–12 also requires that the instructions cover correct assembly of product and use of attachment system, and conversion, as well as alert consumers that they should read all instructions and keep the instructions for future use. These requirements fall within the definition of ''collection of information,'' as defined in 44 U.S.C. 3502(3).

Description of Respondents: Persons who manufacture or import bedside sleepers.

Estimated Burden: We estimate the burden of this collection of information as follows:

TABLE 1—ESTIMATED ANNUAL REPORTING BURDEN

16 CFR Section	Number of respondents	Frequency of responses	Total annual responses	Hours per response	Total burden hours
1222	5	2	10	1	10

Our estimates are based on the following:

There are five known firms supplying bedside sleepers to the U.S. market. All five firms are assumed to use labels on both their products and their packaging already, but they might need to make some modifications to their existing labels. The estimated time required to make these modifications is about 1 hour per model. Each of these firms supplies an average of two different models of bedside sleepers; therefore, the estimated burden hours associated with labels is 1 hour × 5 firms × 2 models per firm = 10 annual hours.

Sections 8.1 and 8.2 of ASTM F2906–12 require instructions to be supplied with the product. This is a practice that is customary with bedside sleepers. Bedside sleepers are products that generally require some installation and maintenance instructions, and any products sold without such information would not be able to compete successfully with products that provide this information. Therefore, because the CPSC is unaware of bedside sleepers that: (a) Generally require some installation, but (b) lack any instructions to the user about such installation, there are no burden hours associated with the instruction requirement in sections 8.1 and 8.2 because any burden associated with supplying instructions with bedside sleepers would be ''usual and customary'' and not within the definition of ''burden'' under the OMB's regulations.

We estimate that hourly compensation for the time required to create and update labels is $27.64 (U.S. Bureau of Labor Statistics, ''Employer Costs for Employee Compensation,'' June 2012, Table 9, total compensation for all sales and office workers in goods-producing private industries: *http://www.bls.gov/ncs/*). Therefore, the estimated annual cost associated with the proposed requirements is $276 ($27.64 per hour × 10 hours = $276).

In compliance with the Paperwork Reduction Act of 1995 (44 U.S.C.

3507(d)), we have submitted the information collection requirements of this rule to the OMB for review. Interested persons are requested to submit comments regarding information collection by January 9, 2013, to the Office of Information and Regulatory Affairs, OMB (see the **ADDRESSES** section at the beginning of this notice).

Pursuant to 44 U.S.C. 3506(c)(2)(A), we invite comments on:

- Whether the collection of information is necessary for the proper performance of the CPSC's functions, including whether the information will have practical utility;
- The accuracy of the CPSC's estimate of the burden of the proposed collection of information, including the validity of the methodology and assumptions used;
- Ways to enhance the quality, utility, and clarity of the information to be collected;
- Ways to reduce the burden of the collection of information on respondents, including the use of automated collection techniques, when appropriate, and other forms of information technology; and
- The estimated burden hours associated with label modification, including any alternative estimates.

J. Preemption

Section 26(a) of the CPSA, 15 U.S.C. 2075(a), provides that where a consumer product safety standard is in effect and applies to a product, no state or political subdivision of a state may either establish or continue in effect a requirement dealing with the same risk of injury unless the state requirement is identical to the federal standard. Section 26(c) of the CPSA also provides that states or political subdivisions of states may apply to the Commission for an exemption from this preemption under certain circumstances. Section 104(b) of the CPSIA refers to the rules to be issued under that section as ''consumer product safety rules,'' thus implying that the preemptive effect of section 26(a) of the CPSA would apply. Therefore, a rule issued under section 104 of the CPSIA will invoke the preemptive effect of section 26(a) of the CPSA when it becomes effective.

K. Certification and Notice of Requirements (NOR)

Section 14(a) of the CPSA imposes the requirement that products subject to a consumer product safety rule under the CPSA, or to a similar rule, ban, standard or regulation under any other act enforced by the Commission, must be certified as complying with all applicable CPSC-enforced requirements. 15 U.S.C. 2063(a). Section 14(a)(2) of the CPSA requires that certification of children's products subject to a children's product safety rule be based on testing conducted by a CPSC-accepted third party conformity assessment body. Section 14(a)(3) of the CPSA requires the Commission to publish a notice of requirements (NOR) for the accreditation of third party conformity assessment bodies (or laboratories) to assess conformity with a children's product safety rule to which a children's product is subject. The proposed rule for 16 CFR part 1222, ''Safety Standard for Bedside Sleepers,'' when issued as a final rule, will be a children's product safety rule that requires the issuance of an NOR.

On May 24, 2012, the Commission published a proposed rule in the **Federal Register** titled, ''Requirements Pertaining to Third Party Conformity Assessment Bodies,'' 77 FR 31086, which, when finalized, would establish the general requirements and criteria concerning testing laboratories under 16 CFR part 1112. These include the requirements and procedures for CPSC acceptance of the accreditation of a laboratory to test children's products in support of the certification required by section 14(a)(2) of the CPSA. The proposed rule lists the children's product safety rules for which the CPSC has published NORs for laboratories. In this document, the Commission is proposing to amend the list in 16 CFR part 1112, once that rule becomes final, to include the bedside sleeper standard, once finalized, along with the other children's product safety rules for which the CPSC has issued NORs.

Laboratories applying for acceptance as a CPSC-accepted third party conformity assessment body to test to the new standard for bedside sleepers would be required to meet the third party conformity assessment body accreditation requirements in 16 CFR part 1112, *Requirements Pertaining to Third Party Conformity Assessment Bodies* once that rule becomes final. When a laboratory meets the requirements as a CPSC-accepted third party conformity assessment body, it can apply to the CPSC to have 16 CFR part 1222, Safety Standard for Bedside Sleepers, included in its scope of accreditation of CPSC safety rules listed for the laboratory on the CPSC Web site at: *www.cpsc.gov/labsearch.*

CPSC staff conducted an analysis of the potential impacts on small entities of the proposed rule establishing accreditation requirements, as required by the Regulatory Flexibility Act, and prepared an Initial Regulatory Flexibility Analysis (IRFA). *Requirements Pertaining to Third Party Conformity Assessment Bodies.* 77 FR 31086, 31123–26. The IRFA concluded that the requirements would not have a significant adverse impact on a substantial number of small laboratories because no requirements are imposed on laboratories that do not intend to provide third party testing services under Section 14(a)(2) of the CPSA. The only laboratories that are expected to provide such services are those that anticipate receiving sufficient revenue from providing the mandated testing to justify accepting the requirements as a business decision. Laboratories that do not expect to receive sufficient revenue from these services to justify accepting these requirements would likely not pursue accreditation for this purpose. Similarly, amending the rule to include the NOR for the bedside sleeper standard would not have a significant adverse impact on small laboratories. Moreover, based upon the number of laboratories in the United States that have applied for CPSC acceptance of the accreditation to test for conformance to other juvenile product standards, we expect that only a few laboratories, perhaps fewer than 6, will seek CPSC acceptance of their accreditation to test for conformance with the bedside sleeper standard. Most of these laboratories already will have been accredited to test for conformance to other juvenile product standards, and the only cost to them would be the cost of adding the bedside sleeper standard to their scope of accreditation. As a consequence, the Commission could certify that the proposed NOR for the bedside sleeper standard will not have a significant impact on a substantial number of small entities.

The final NOR will base the CPSC laboratory accreditation requirements on the performance standard set forth in the final rule for the safety standard for bedside sleepers and the test methods incorporated within that standard. The Commission may recognize limited circumstances in which it will accept certification based on product testing conducted before the Commission's acceptance of accreditation of laboratories for testing bedside sleepers (also known as retrospective testing) in the final NOR. The Commission seeks comments on any issues regarding the testing requirements of the proposed rule for bedside sleepers and the accompanying proposed NOR.

L. Request for Comments

This proposed rule begins a rulemaking proceeding under section 104(b) of the CPSIA to issue a consumer product safety standard for bedside sleepers. We invite all interested

persons to submit comments on any aspect of the proposed rule. Comments should be submitted in accordance with the instructions in the **ADDRESSES** section at the beginning of this notice.

List of Subjects

16 CFR Part 1112

Administrative practice and procedure, Audit, Consumer protection, Reporting and recordkeeping requirements, Third party conformity assessment body.

16 CFR Part 1222

Consumer protection, Imports, Incorporation by reference, Infants and children, Labeling, Law enforcement, and Toys.

For the reasons discussed in the preamble, the Commission proposes to amend Title 16 of the Code of Federal Regulations as follows:

PART 1112—REQUIREMENTS PERTAINING TO THIRD PARTY CONFORMITY ASSESSMENT BODIES

1. The authority citation for part 1112 continues to read as follows:

Authority: Pub. L. 110–314, section 3, 122 Stat. 3016, 3017 (2008); 15 U.S.C. 2063.

2. Amend Part 1112.15 by adding paragraph (b)(34) to read as follows:

§ 1112.15 When can a third party conformity assessment body apply for CPSC acceptance for a particular CPSC rule and/or test method?

* * * * *

(b) The CPSC has published previously, or in the cases of 16 CFR parts 1221, 1223, and 1224, and ASTM F 963–11 for the first time, the requirements for accreditation for third party conformity assessment bodies to assess conformity with the following CPSC rules and/or test methods:

* * * * *

(34) 16 CFR part 1222, Safety Standard for Bedside Sleepers.

3. Add part 1222 to read as follows:

PART 1222—SAFETY STANDARD FOR BEDSIDE SLEEPERS

Sec.
1222.1 Scope.
1222.2 Requirements for Bedside Sleepers.

Authority: The Consumer Product Safety Improvement Act of 2008, Pub. L. 110–314, § 104, 122 Stat. 3016 (August 14, 2008); Pub. L. 112–28, 125 Stat. 273 (August 12, 2011).

§ 1222.1 Scope.

This part establishes a consumer product safety standard for bedside sleepers.

§ 1222.2 Requirements for Bedside Sleepers.

(a) Except as provided in paragraph (b) of this section, each bedside sleeper must comply with all applicable provisions of ASTM F2906–12, Standard Consumer Safety Specification for Bedside Sleepers, approved on June 1, 2012. The Director of the Federal Register approves this incorporation by reference in accordance with 5 U.S.C. 552(a) and 1 CFR part 51. You may obtain a copy from ASTM International, 100 Bar Harbor Drive, P.O. Box 0700, West Conshohocken, PA 19428; *http://www.astm.org/cpsc.htm.* You may inspect a copy at the Office of the Secretary, U.S. Consumer Product Safety Commission, Room 820, 4330 East West Highway, Bethesda, MD 20814, telephone 301–504–7923, or at the National Archives and Records Administration (NARA). For information on the availability of this material at NARA, call 202–741–6030, or go to: *http://www.archives.gov/federal_register/code_of_federalregulations/ibr_locations.html.*

(b) Comply with the ASTM F2906–12 standard with the following additions:

(1) In addition to complying with section 3.1.7 of ASTM F2906–12, comply with the following:

(i) 3.1.8 ''*bedside sleeper accessory,* n—an elevated sleep surface that attaches to a non-full-size crib or play yard, designed to convert the product into a bedside sleeper intended to have a horizontal sleep surface while in a rest (non-rocking) position.''

(ii) [Reserved]

(2) In addition to complying with section 5.6 of ASTM F2906–12, comply with the following:

(i) 5.7 *Bedside Sleeper Accessory Fabric-Sided Enclosed Openings*—A bedside sleeper accessory shall meet the F2194 performance requirement, ''*Fabric-Sided Enclosed Openings.*''

(A) 5.7.1 Bedside sleeper accessories are exempt from this requirement if either of the following two conditions is met after disengaging all fasteners between the accessory and the non-full-size crib or play yard base to which it is assembled:

(B) 5.7.1.1 The bedside sleeper accessory collapses under its own weight, such that any part of the mattress pad contacts the bottom floor of the non-full-size crib or play yard.

(C) 5.7.1.2 The bedside sleeper accessory's sleep surface tilts by more than 30 degrees.

(ii) 5.8 *Bedside Sleeper Play Yard Accessories Missing Key Structural Elements:* A bedside sleeper accessory shall meet the F406 general requirement ''Bassinet/Cradle Accessories Missing Key Structural Elements.''

Dated: December 3, 2012.

Todd A. Stevenson,

Secretary, Consumer Product Safety Commission .

[FR Doc. 2012–29583 Filed 12–7–12; 8:45 am]

BILLING CODE 6355–01–P

CONSUMER PRODUCT SAFETY COMMISSION

16 CFR Parts 1112 and 1225

[CPSC Docket No. CPSC–2012–0068]

RIN 3041–AD16

Safety Standard for Hand-Held Infant Carriers

AGENCY: Consumer Product Safety Commission.

ACTION: Notice of Proposed Rulemaking.

SUMMARY: The Danny Keysar Child Product Safety Notification Act, Section 104(b) of the Consumer Product Safety Improvement Act of 2008 (CPSIA) requires the United States Consumer Product Safety Commission (Commission, CPSC, or we) to promulgate consumer product safety standards for durable infant or toddler products. These standards are to be ''substantially the same as'' applicable voluntary standards or more stringent than the voluntary standard if the Commission concludes that more stringent requirements would further reduce the risk of injury associated with the product. The Commission is proposing a safety standard for handheld infant carriers in response to the direction under Section 104(b) of the CPSIA. The proposed rule would incorporate ASTM F2050–12 by reference, with two modifications.

DATES: Submit comments by February 25, 2013.

ADDRESSES: Comments related to the Paperwork Reduction Act aspects of the marking, labeling, and instructional literature of the proposed rule should be directed to the Office of Information and Regulatory Affairs, OMB, Attn: CPSC Desk Officer, Fax: 202–395–6974, or emailed to mailed to: *oira_submission@omb.eop.gov.*

Other comments, identified by Docket No. CPSC-2012-0068, may be submitted electronically or in writing:

Electronic Submissions: Submit electronic comments to the Federal eRulemaking Portal at: *http://www.regulations.gov.* Follow the instructions for submitting comments. To ensure timely processing of comments, the Commission is no longer

directly accepting comments submitted by electronic mail (email), except through *www.regulations.gov.* The Commission encourages you to submit electronic comments by using the Federal eRulemaking Portal, as described above.

Written Submissions: Submit written submissions in the following way: Mail/Hand delivery/Courier (for paper, disk, or CD–ROM submissions), preferably in five copies, to: Office of the Secretary, Consumer Product Safety Commission, Room 820, 4330 East West Highway, Bethesda, MD 20814; telephone (301) 504–7923.

Instructions: All submissions received must include the agency name and docket number for this rulemaking. All comments received may be posted without change, including any personal identifiers, contact information, or other personal information provided, to: *http://www.regulations.gov.* Do not submit confidential business information, trade secret information, or other sensitive or protected information that you do not want to be available to the public. If furnished at all, such information should be submitted in writing.

Docket: For access to the docket to read background documents or comments received, go to: *http://www.regulations.gov,* and insert the docket number, CPSC 2012–0068, into the ''Search'' box, and follow the prompts.

FOR FURTHER INFORMATION CONTACT:

Patricia L. Edwards, Project Manager, Directorate for Engineering Sciences, U.S. Consumer Product Safety Commission, 5 Research Place, Rockville, MD 20850; email: *pedwards@cpsc.gov.*

SUPPLEMENTARY INFORMATION:

I. Background and Statutory Authority

The CPSIA was enacted on August 14, 2008. Section 104(b) of the CPSIA, part of the Danny Keysar Child Product Safety Notification Act, requires the Commission to promulgate consumer product safety standards for durable infant or toddler products. These standards are to be ''substantially the same as'' applicable voluntary standards or more stringent than the voluntary standard if the Commission concludes that more stringent requirements would further reduce the risk of injury associated with the product. The term ''durable infant or toddler product'' is defined in section 104(f)(1) of the CPSIA as a durable product intended for use, or that may be reasonably expected to be used, by children under the age of 5 years. Infant carriers are one of the products specifically identified in section 104(f)(2)(F) as a durable infant or toddler product. At this time, the Commission has identified four types of products that could fall within the infant carrier product category, including: Frame backpack carriers, soft infant and toddler carriers, slings, and handheld infant carriers. This rule addresses hazards associated only with hand held infant carriers. Hazards associated with other types of carriers would be addressed in separate rulemaking proceedings.

In this document, the Commission proposes a safety standard for hand held infant carriers. The proposed standard is based on the voluntary standard developed by ASTM International (formerly the American Society for Testing and Materials), ASTM F2050–12, ''Standard Consumer Safety Specification for Hand-Held Infant Carriers.'' The ASTM standard is copyrighted. However, by permission of ASTM, the standard can be viewed as a read-only document during the comment period on this proposal, at: *http://www.astm.org.*

II. The Product

A. Definition

ASTM F2050–12 defines a ''hand held infant carrier'' as a ''freestanding, rigid-sided product intended to carry an occupant whose torso is completely supported by the product to facilitate transportation by a caregiver by means of hand-holds or handles.'' The current ASTM voluntary standard references two types of hand held infant carriers: hand-held bassinets/cradles that incline 10 degrees or less from horizontal and sit directly on the floor, and hand-held carrier seats that incline more than 10 degrees from horizontal and are often also used as attachments to serve as infant car seats, strollers, or high chairs. The current ASTM voluntary standard defines ''hand-held carrier seat'' as a ''hand-held infant carrier having a seat back that is intended to be in a reclined position (more than 10° from horizontal),'' and ''hand-held bassinet/cradle'' is defined as '' freestanding product, with a rest/support surface to facilitate sleep (intended to be flat or up to 10° from horizontal), that sits directly on the floor, without legs or a stand, and has hand-holds or handle(s) intended to allow carrying an occupant whose torso is completely supported by the product.'' Some of the requirements in F2050–12 are different for hand-held bassinets/cradles and hand-held infant carriers because the intended position of the occupant (lying supine vs. sitting reclined) and the product designs used to accommodate the occupant can create different hazards. A Moses basket is considered to be a freestanding product with a rest/support surface to facilitate sleep and typically has hand-holds or handle(s) intended to allow carrying an occupant. Moses baskets typically have semi-rigid sides. The Commission seeks comments on whether Moses baskets are or should be covered by this safety standard. The Commission specifically seeks comments on (1) whether the definition of ''hand-held bassinet/cradle'' in ASTM F2050–12 includes Moses baskets, and (2) if Moses baskets are not covered by the safety standard but should be, how the present definition should be amended to more clearly cover Moses baskets.

B. The Market

Based on the 2005 survey conducted by American Baby Group titled, ''2006 Baby Products Tracking Study,'' and annual birth data from the Centers for Disease Control and Prevention (CDC), we estimate that approximately 2.1 million infant car seats are sold in the United States each year. We do not know how many hand-held bassinets/cradles are sold annually. Hand-held carrier seats and hand-held bassinets/cradles are typically produced and/or marketed by juvenile product manufacturers and distributors, except for Moses baskets, a unique type of hand-held bassinet/cradle that is often marketed by bedding manufacturers and distributors. We estimate there are currently at least 43 suppliers of both types of hand-held infant carriers to the U.S. market, 11 of which are domestic manufacturers and 10 of which are domestic importers. We estimate that 20 firms supply Moses basket-style hand-held bassinets/cradles only, but the source of these carriers is unknown. There are also two foreign firms—a foreign manufacturer and an importer that import products from foreign companies and distributes them in the United States.

The products of 13 of the 43 hand-held infant carrier suppliers will likely be compliant with ASTM F2050–12 (6 are Juvenile Products Manufacturers Association (JPMA) certified to F2050–09; 3 claim compliance with F2050; and 4 have JPMA-certified strollers with hand-held infant carrier attachments).[1]

[1] JPMAs typically allows 6 months for products in their certification program to shift to a new standard once it is published. ASTM F2050–12, The voluntary standard upon which the proposed standard is based, will become effective for JPMA certification purposes in approximately March 2013. Firms that supply JPMA-certified strollers are expected to ensure that all of their attachments,

Continued

Of the remaining 30 firms supplying noncompliant hand-held infant carriers, the majority (25 firms) supply products that are newly covered due to the expanded scope of ASTM F2050–12 (20 supply Moses baskets; 3 supply bassinet attachments for strollers; and 2 supply other types of bassinet-style carriers) to include hand-held bassinets/cradles.

III. Incident Data

The CPSC's Directorate for Epidemiology notes that there have been 242 incidents, occurring between January 1, 2007 and June 7, 2012, reported to the Commission regarding hand-held infant carriers. Of the 242 incidents, there were 36 fatalities, 60 nonfatal injuries, and 146 incidents where no injury occurred or was reported.

A. Fatalities

From January 1, 2007 through early June, 2012, there were 36 fatalities associated with hand-held infant carriers. The majority of the fatalities are attributed to the improper use or non-use of the carrier's restraint system.

Five of the fatalities were caused by the infant carrier being placed in a hazardous environment, and therefore, these fatalities are considered to be non-product related. Two of these fatalities occurred when the infant carrier was placed atop a stove, which subsequently was ignited accidently. Another fatality was attributed to hyperthermia after an infant was left unattended in a carrier for an extended period of time, wrapped in multiple blankets, and left in a room with temperatures exceeding 90 degrees. In another of these five deaths, an infant in a carrier that was placed cross-wise inside a bassinet was able to tip the carrier into a reclined position, resulting in an asphyxiation death. The last of these five fatalities was the result of an infant suffocating on a blanket that was placed over his head while in the carrier. For an additional two fatalities, the evidence is insufficient to determine if there was any product involvement or the presence of any hazardous external circumstances.

The remainder of the fatal incidents includes:

- Nine children were strangled by the carrier's harness chest clips or strap. In most of these incidents the infant was partially restrained in the seat with only the shoulder straps in place, with the crotch strap left unsecured, which allowed the infant to slide forward in the seat far enough to get caught at the throat by the chest clip that connects the two shoulder straps.
- In one incident, the restraint straps were too tight and impaired the infant's breathing, although no information regarding the placement of the straps was provided.
- Seven children were left unrestrained in the carrier and found in a prone position, face down on the seat, or on a blanket, covers, and/or pillow.
- Two children who had been left unrestrained in the carrier were found prone on the seat of the carrier, which had also tipped over.
- Three children were reported to have been trapped in an overturned seat, although no information was provided about the use of the restraints or how the seat overturned in these incidents.
- One fatality resulted from a fall from a carrier that was on a shopping cart but not equipped to attach to the cart.
- Six additional deaths were associated with hand-held carriers, but there was insufficient information to determine the circumstances.

B. Nonfatal Injuries

From January 1, 2007 through early June 2012, 206 nonfatal incidents were reported. Of those, 60 incidents involved an injury, and 2 of those required hospitalization due to serious head injuries suffered from a fall from a carrier that was on top of a shopping cart. Bumps, bruises, abrasions, lacerations, allergic reactions and near-choking episodes are the most common injuries reported in the remaining 58 injury reports. No age was reported for 28 percent of the injury incidents. For incidents where the age was reported, 1 child was reported to be 13 months old, 1 was reported to be 23 months old, and the rest were 12 months or younger. The remaining 146 incident reports indicate that no injury occurred or they fail to provide any information regarding injuries to the carrier occupant. However, many of the descriptions of the incidents suggest the potential for serious injury or death.

C. Recalls

There have been a total of three consumer-level recalls involving hand-held carriers from January 1, 2007 through June 7, 2012.

One recall, involving 450,000 car seats/carriers manufactured from December 2004 through September 2006, pertained to the carrier seat handle. The carrier handle could release unexpectedly, causing the seat to rotate forward in a manner that could result in the occupant of the carrier falling to the ground and suffering serious injuries. There were 679 incidents of the handle releasing unexpectedly, resulting in 160 injuries reported to the CPSC and the manufacturer. The recall notice instructed consumers not to use the seat as a carrier until the repair kit offered by the manufacturer had been obtained and installed. (The modifications to the handle auto-lock test discussed in Section VI would address this hazard.)

Another recall, conducted on December 18, 2009, involving 447,000 infant car seat/carriers manufactured from January 6, 2008 to April 6, 2009, also pertained to the carrier handle. The seat handle could loosen and fall off, posing a fall hazard to the infant occupant of the seat. There were 77 incidents of the child restraint handle fully or partially detaching from the car seat/carrier, resulting in three injuries, reported to the CPSC and the manufacturer. Consumers were instructed not to use the seat as a carrier until they had obtained and installed the repair kit offered by the manufacturer. (The carrying handle integrity test included in ASTM F2050–12, addresses this hazard).

The third recall was conducted on November 4, 2010, and it involved 23,000 infant car seats/carriers manufactured between April 2009 and May 2010. The harness chest clips could break, posing a fall hazard, and the broken pieces were small enough for an infant to swallow, which posed a choking hazard. There were four incidents of the chest clip breaking, resulting in three injuries reported to the CPSC and the manufacturer. The injuries that resulted from the clip breaking were minor lacerations and scratches to arms and a finger, and one report involved an infant placing the broken clip in his mouth. The recall notice instructed consumers to contact the manufacturer to request a free repair kit. (The restraint system test included in ASTM F2050–12 addresses this hazard.)

IV. Hand-Held Carrier International Standards and the ASTM Voluntary Standard

Section 104(b)(1)(A) of the CPSIA requires the Commission to consult representatives of ''consumer groups, juvenile product manufacturers, and independent child product engineers and experts'' to ''examine and assess the effectiveness of any voluntary consumer product safety standards for durable infant or toddler products.'' As a result of incidents and recalls of hand-held infant carriers in the 1990s, CPSC staff requested ASTM to develop voluntary requirements to address the hazards

including hand-held infant carriers, comply with all applicable ASTM standards as well.

related to handle breakage and handle lock failures. Through the ASTM process, we consulted with manufacturers, retailers, trade organizations, laboratories, consumer advocacy groups, consultants, and members of the public. The voluntary standard for hand-held infant carriers was first approved and published in August 2000, as ASTM F2050–00, *Standard Consumer Safety Performance Specification for Hand-Held Infant Carriers.* It has been revised five times since then. The current version, ASTM F2050–12, was approved on July 1, 2012.

In addition to reviewing the ASTM standard, we reviewed several international standards.

A. International Standards

We identified one international standard, EN 12790, *European/British Standard for Child Care Articles—Reclined Cradles,* which addresses hand-held infant carriers in a manner similar to ASTM F2050–12. However, reclined cradles are designed and intended for unattended sleep, and the European standard includes requirements that also pertain to that use pattern. One difference between EN 12790 and ASTM F2050–12 is entrapment dimensions for holes and slot openings. The European standard permits dimensions for slot openings to be between 7 mm and 12 mm, while ASTM F–2050–12 allows dimensions of 5 mm to 9.5 mm. We have concluded that the existing dimensions in the ASTM standard are anthropometrically appropriate and that there are no hazard patterns that would warrant modification of these dimensions. In addition, we concluded that the hazard patterns noted in the incidents do not warrant modification of the ASTM standard to address the requirements for flammability, surface chemicals, cords/ribbons, cradle angles, and cradle strength/durability that appear in EN 12790. Finally, we note that EN 12790 includes requirements for folding cradles, which is a use pattern outside the scope of ASTM F2050–12.

We reviewed several other international standards and a National Highway Safety Transportation Administration (NHTSA) standard that address requirements for restraint systems of products when used in motor vehicles, and we concluded that these standards do not address the incident hazard patterns associated with hand-held infant carriers. These standards are: ECE 44 (European Provision for Restraining Devices for Child Occupants of Power-Driven Vehicles, JIS D 0401 (Japanese Standard for Automotive Accessories—Child Restraints), AS/NZS 1754:2010 (Australian/New Zealand Standard for Child Restraint Systems for Use in Motor Vehicles), and FMVSS No. 213 (NHSTA Requirements for Child Restraint Systems Used in Motor Vehicles and Aircraft).

B. The ASTM Voluntary Standard

In response to incidents and recalls of hand-held infant carriers in the 1990s related to handle breakage and handle lock failures, CPSC requested ASTM to develop voluntary requirements to address the hazards. CPSC staff participated in ASTM subcommittee meetings and testing protocols in developing draft requirements. ASTM F 2050, *Standard Consumer Safety Performance Specification for Hand-Held Infant Carriers* was first approved and published in August 2000. ASTM has revised the standard four times since then, with the most current version ASTM F 2050–12, approved on July 1, 2012. Details regarding the changes in the voluntary standard through revisions in October, 2001, November, 2003, December, 2008, and October 2009, are provided at pages 30 and 31 of the November 7, 2012, Staff Briefing Package.

ASTM F2050–12 addresses many of the general hazards associated with durable nursery products, such as lead in paints, sharp edges/sharp points, small parts, wood part splinters, scissoring/shearing/pinching, openings/entrapments, and toys. Specific requirements for labeling, handle integrity, handle auto-locking, and restraint systems are also included.

The key provisions of the current ASTM hand-held infant carrier standard include: Definitions; general requirements; performance requirements; specific test methods; and requirements for marking, labeling, and instructional literature.

Definitions. ASTM F2050–12 defines ''hand-held infant carrier'' as a ''free standing, rigid-sided product intended to carry an occupant whose torso is completely supported by the product to facilitate transportation by a caregiver by means of hand-holds or handles.'' The definition of ''hand-held infant carrier seat'' is ''a hand-held infant carrier having a seat back that is intended to be in a reclined position (more than 10° from horizontal).'' The definition of ''hand-held bassinet/cradle'' is a ''freestanding product, with a horizontal rest/support surface to facilitate sleep (intended to be flat or up to 10 from horizontal), which sits directly on the floor, without legs or a stand, and has hand-holds or handle(s) intended to allow carrying an occupant whose torso is completely supported by the product.''

General Requirements. ASTM F2050–12 contains general requirements that the product must meet, as well as mandated test methods that must be used to ensure that the product meets those requirements, including:

- Restrictions on sharp points, small parts, lead paint, and wood parts;
- Specifications to prevent scissoring, shearing, and pinching;
- Requirements for toy accessory items, and the non-removal of protective components;
- Specifications on openings (intended to prevent finger and toe entrapment), labeling (intended to prevent labels from being removed and ingested or aspirated on), and coil springs; and
- Torque and tension tests for protective components.

Performance Requirements and Specific Test Methods. ASTM F2050–12 provides performance requirements that the product must meet, as well as mandated test methods that must be used to ensure that the product meets the performance requirement, including:

- A carry handle auto-locking requirement (the carry handle must move unaided into the designated carry position or move unaided into a position that is obvious to the caregiver that the carry handle is not in the designated carry position);
- A carry handle integrity requirement (a rigid carry handle that rotates in head-to-foot and foot-to-head directions must not break or unlatch on either or both sides when subject to the handle endurance test);
- A restraint system requirement (hand held carrier seats not intended for use in motor vehicles must have a waist and crotch restraint while hand-held bassinets/cradles may not contain a restraint system);
- Slip-resistance requirements;

Marking, Labeling, and Instructional Literature. ASTM F2050–12 sets forth requirements for marking, labeling, and instructions that must accompany a hand-held carrier, including warnings regarding proper use of restraint straps, placement of the carrier on soft or elevated surfaces, and suffocation and strangulation hazards that may arise if restraint straps are not used properly and suffocation hazards that can arise when the carrier is placed on a soft surface. The warning label also advises caregivers never to leave a child unattended in the carrier. The standard also includes requirements and tests for the permanency of labels and warnings.

V. Assessment of Voluntary Standard ASTM F2050–12

We considered the fatalities, injuries, and noninjury incidents associated with hand-held carriers, and we evaluated the voluntary standard to determine whether ASTM F2050–12 addresses the incidents or whether more stringent standards are required that would further reduce the risk of injury associated with these products. We discuss our assessment in this section, but our assessment does not include deaths and injuries associated with hand-held carriers where there was insufficient evidence to determine the circumstances.

1. Hazardous Surroundings

Five of the 36 fatalities reported, and 12 of the 242 incidents reported involving a hand-held carrier were attributable to unsafe environments around the carrier. Two of the five fatalities resulted when the carrier was placed on top of a stove that later was ignited. In another of the fatalities, the infant died from hyperthermia after being left unattended in a carrier, wrapped in blankets, in a room where temperatures exceeded 90 degrees. In another fatality, the infant was placed in the carrier cross-wise inside a bassinet and asphyxiated when the carrier was tipped into a reclined position trapping the infant between the carrier and the interior of the bassinet. The fifth fatality was attributable to a suffocation in which a blanket was placed over the infants head while in the carrier. Risks due to hazardous surroundings are not attributable to the design or construction of the hand-held carriers. ASTM F 2050–12 includes product warnings that address the dangers of placing the product near the edges of counter tops or on elevated surfaces, and the warnings direct caregivers never to leave a child unattended in a carrier. We do not believe there are additional requirements that can be put into place in the standard to address this issue.

2. Hazards Related to Accessories

Issues related to accessories, such as toys, canopies, carrier seat covers, and head and body support devices were reported in 28 of the 242 (12 percent) reported incidents. In 27 of these incidents, the accessory was not supplied with the carrier, but was purchased separately by a caregiver. In the remaining incident, the accessory was an attached canopy. While there were no fatalities involving accessories, the incidents reported included: Choking on a device designed to attach a toy to the carrier handle; jamming an arm into the side of toy; breathing obstruction from canopy drooping onto childs face; and breaking and detaching small pieces from a pacifier and a pacifier holder. The current standard precludes hazardous sharp edges or points, as defined in 16 CFR 1500.48 and 1500.49 before and after testing to the standard, and prohibits small parts, as defined in 16 CFR part 1501, before testing or liberated as a result of testing to the standard. The standard also requires that any toy accessories attached to, removable from, or sold with, an infant carrier, as well as their means of attachment must meet the applicable requirements of ASTM Consumer Safety Specification F963 (now CPSC's mandatory toy standard). We believe that these requirements are sufficient to address these hazards, and therefore we are not proposing any additional requirements at this time.

3. Design Issues

Twenty-eight of the 242 incident reports (12 percent) are attributed to the design of the carrier. Three of the incidents reported in this category were fatalities. Design issues are related to instability, sharp surfaces, unsafe infant posture when seated, and structural integrity. Although the three reported fatalities involve a child becoming trapped under an overturned seat, insufficient information was provided in these reports to determine what caused the seat to overturn. It is possible these tip overs could be related to the stability of the carrier when placed on tables, sofas, or chairs. However, there is insufficient incident data to support a conclusion that design issues were the cause of the fatalities or other incidents. Additionally, many carriers are designed to meet NHTSA requirements for occupant crashworthiness, and modification of the carrier to improve stability when used outside the vehicle might affect how the carrier integrates into the carrier base in the vehicle. For these reasons, we are not proposing any changes to address stability-related design issues at this time.

In addition to stability, this hazard pattern includes occupant-positioning incidents. Six consumer complaints involve infant head slumping. However, we received no reports of fatalities or injuries resulting from infant head slumping. Because we are aware of no injuries resulting from this hazard, and because a revision of the standard to address angle of seat incline may implicate issues within NHTSA's jurisdiction, we are not proposing any changes to address angle of seat incline at this time.

Three consumer complaints state that mothers do not always pay appropriate attention to the way they swing carriers while an infant is in the seat. The complaints suggest that this movement may place the infant at risk for shaken baby syndrome. Because there are no injuries reported in connection with this scenario, and because no revision of the standard would likely address any potential risk of injury arising from the way a caregiver swings the carrier, we are not proposing any changes to address this issue at this time.

4. Falls From Shopping Carts

Incidents included one reported fatality and two reported injuries involving children who fell from shopping carts on which the carriers had been placed. The two injured children required hospitalization for serious head injuries suffered when they fell to the floor from a carrier that had been placed on a shopping cart. The risk associated with placing a child in a hand-held carrier on a shopping cart is addressed by ASTM 2372–11a, *Standard for Consumer Safety Performance Specification for Shopping Carts,* which was developed to address injuries to children associated with falls from shopping carts. This standard requires each shopping cart to have warning statements instructing the user not to use a personal infant carrier but instead to use the seat in the cart and to fasten the child securely into the seat. In addition, the standard requires retailers to provide additional safety information in the form of warning posters at the point of use. The warning label pertaining to safe use recently was revised and includes a pictogram concerning the use of hand-held carriers in the cart. This new label is included in this latest version, which was approved in January 2012. We do not believe that there are additional requirements that can be put in place in either ASTM 2372–11a or ASTM F2050–12 to address this issue.

5. Fabric Issues

In 15 of the 242 (6 percent) reported incidents, the injury related to the carrier fabric or padding. Incidents related to fabric include: allergic reactions to padding or items attached to padding; bruising from fabric stitching; and ingesting padding foam. This hazard pattern is not specific to this product. Because similar incidents occur with other durable products and are expected with any product with fabric or padding, we are not proposing any additional requirements to address fabric issues at this time.

6. Other Product-Related Concerns

In 10 of the 242 (4 percent) reported incidents, we were unable to identify a specific hazard pattern because insufficient information regarding the circumstances of the incident was provided. Six of these incidents resulted in fatalities. Most of these reports indicate possible improper use of the carrier or another contributing factor, such as soft bedding. For example, one case involves an infant sleeping in the carrier with a blanket or covering that may have resulted in suffocation. However, because we are unable to identify a specific hazard pattern in incidents with insufficient information, we are not proposing additional requirements at this time.

7. Other Unknown Issues

Two fatalities could not be attributed to design or performance of the hand-held carrier. We are in the process of investigating both deaths, and once these investigations are complete, further review by CPSC staff will be warranted to determine if the design or construction of the hand-held carrier contributed to the deaths. If we conclude that the design or construction of the hand-held carrier contributed to either of these deaths, we will determine whether additional requirements are necessary. Because the involvement of the product in these incidents is unclear, we cannot propose additional requirements in the absence of information supporting the conclusion that these two incidents were attributed to the design or performance of the hand-held carrier.

VI. Description of Proposed Changes to ASTM Standard

The proposed rule would create a new part 1225 titled, ''Safety Standard for Hand Held Carriers.'' The proposed rule would establish ASTM F2050–12, ''Standard Consumer Safety Specification for Hand-Held Infant Carriers,'' as a consumer product safety standard, but with certain changes. We are proposing two changes to ASTM F2050–12. One change would add a strangulation warning label to be affixed to the outer surface of the cushion or padding of a hand-held carrier seat in or adjacent to the area where the childs head would rest. The warning label for hand-held carrier seats that are intended to be used as restraints in motor vehicles would include a pictogram, while the warning label for hand-held carrier seats not intended to be used as restraints in motor vehicles would not include the pictogram because these seats do not have the chest clips depicted in the pictogram.

The other change would affect the test method for ensuring that the carrier will not rotate and spill an unrestrained infant when a caregiver picks up the carrier and the handle is not locked in the carry position. The test method in ASTM F2050–12 requires the tester to use a standard CAMI, Mark II 6-month infant dummy as an infant surrogate. The proposed change would require the tester to use an aluminum cylinder designed as a surrogate for a 6-month old infant, in lieu of the CAMI dummy, because the CAMI dummy could be wedged into the seat padding or otherwise manipulated, such that it does not fall out during the lift test when it otherwise should fall. Further, the ability to pass or fail the test based on friction or placement of the CAMI affects the consistency and repeatability of the test results.

We describe these proposed changes in the following section.

A. Improper Restraint Usage

Incorrect use or nonuse of the harness straps were involved in 81 of the 242 reported incidents and resulted in 19 of the 36 fatalities related to hand-held carriers from January 1, 2007 to early June 2012. Among these 19 fatalities, nine strangulation incidents occurred due to loose or partially buckled harness straps. In six of the fatalities involving nonuse or improper use of harness straps, the child strangled on the chest clips, while in two incidents children strangled on loose straps. In seven incidents, children who were not restrained in the carrier moved themselves into a compromising position, resulting in asphyxia. Two fatalities occurred when unrestrained infants became trapped under an overturned carrier. In one fatality, straps that were too tight impaired the child's breathing while in the other, it is unclear how the harness strap contributed to the child's death.

ASTM F2050–12 includes product warnings that address the dangers of leaving a child unattended in the carrier, leaving a child in a carrier with loose or unfastened harness straps, and putting the carrier on a soft surface where it can roll over and suffocate a child. The warnings are required to be 'conspicuous,' i.e., visible when the carrier is in the recommended use position to a person standing near the infant carrier in any one position around the carrier but not necessarily visible from all positions. This warning statement attempts to address suffocation, strangulation, and fall hazards. However, a caregiver may not encounter the label during regular use of the carrier.

We propose a new strangulation warning label, placed where a caregiver is expected to notice it during regular interaction with the carrier and the infant, which includes a pictogram depicting proper and improper harness use and that states: 'WARNING–Children have STRANGLED in loose or partially buckled harness straps. Fully restrain the child even when carrier is used outside the vehicle.' An ASTM task group, with the assistance of CPSC staff, developed several different pictorial symbols that were presented to an audience of 159 people. More than 95 percent of the participants who reviewed the recommended pictogram interpreted it correctly. We believe the warning label with the pictogram will improve noticeability and comprehension of the risk.

B. Handle Issues

Handles breaking, detaching, or failing to lock in the carry position were reported in 55 of the 242 incidents. Some of these incidents resulted in injuries, such as a lacerated lip, bruises, and a cranial hemorrhage, when the carrier and/or the child fell to the ground. We believe that many of the incidents attributable to the failure of the handle to lock are the result of the handle appearing to be in a locked position when the caregiver lifts the carrier. We believe that the incidents in which the handle itself breaks or detaches from the carrier are attributable to manufacturing or assembly errors.

The current voluntary standard contains a handle preconditioning cycle test, followed by a static hang test, to assess handle lock stability and integrity. The handle lock impact test is designed to test the handle and handle lock integrity to reduce the number of fall injuries. This test is conducted at the conclusion of the static hang test and consists of dropping a hanging weight at the end of the carrier. The hanging weight simulates dynamic loads placed on the handle and handle lock while a caregiver walks with an infant in the carrier.

The handle auto-lock test helps ensure that when a caregiver picks up the carrier with the handle out of the locked position, the carrier will not rotate and spill an unrestrained infant. This is accomplished by requiring the carrier handle to have an auto-lock feature, or, when not locked in the carry position, to fall to a position so it is obvious to the caregiver that the handle is not in the carry position. If neither condition is met, then the handle must lock into the carry position or another

position, such that when the carrier is lifted by the handle, the infant will not fall out.

The existing handle auto-lock test uses a standard CAMI, Mark II 6-month infant dummy during the lift test. When we tested one carrier, the CAMI became wedged into the seat padding in such a way that the CAMI did not fall out during the lift test when an unrestrained infant in this position likely would fall from the carrier. We also found that CAMI placement in the carrier could be manipulated to achieve the desired results. For example, placing a CAMI with its back high in the seat makes the carrier more likely to pass the test, while placing a CAMI lower in the seat may make the carrier more likely to fail. Thus, friction or the placement of the CAMI affects the consistency and repeatability of the test.

To resolve these CAMI-related test issues, we conducted the auto-lock test using an aluminum cylinder designed as a surrogate for a 6-month-old infant in lieu of the CAMI dummy. This change resulted in consistent test results because the cylinder does not wedge into the carrier padding like the CAMI dummy, and placement of the cylinder is less likely to affect the outcome of the test.

We propose modifying ASTM F2050 to require conducting the auto-lock test with the surrogate cylinder instead of the infant CAMI dummy. The surrogate cylinder is modeled from the torso of a 6-month-old child, and it is also used in the bassinet segmented mattress test we recently proposed in the NPR for bassinets and cradles. 77 FR 64055. Further, EN 12790 *European/British Standard for Child Care Articles—Reclined Cradles*, uses a similar cylinder to conduct their tip test for the same products.

VII. Effective Date

The Administrative Procedure Act (APA) generally requires that the effective date of a rule be at least 30 days after publication of the final rule. 5 U.S.C. 553(d). To allow time for hand-held carriers to come into compliance, we propose that the standard become effective 6 months after publication of the final rule in the Federal Register. We invite comment on how long it will take manufacturers to come into compliance.

VIII. Regulatory Flexibility Act

A. Introduction

The Regulatory Flexibility Act (RFA), 5 U.S.C. 601-612, requires agencies to consider the impact of proposed rules on small entities, including small businesses. Section 603 of the RFA requires that the Commission prepare an initial regulatory flexibility analysis and make it available to the public for comment when the notice of proposed rulemaking is published. The initial regulatory flexibility analysis (IRFA) must describe the impact of the proposed rule on small entities and identify any alternatives that may reduce the impact. Specifically, the IRFA must contain:

- A description of, and where feasible, an estimate of the number of small entities to which the proposed rule will apply;
- A description of the reasons why action by the agency is being considered;
- A succinct statement of the objectives of, and legal basis for, the proposed rule;
- A description of the projected reporting, recordkeeping, and other compliance requirements of the proposed rule, including an estimate of the classes of small entities subject to the requirements, and the type of professional skills necessary for the preparation of reports or records; and
- An identification, to the extent possible, of all relevant federal rules that may duplicate, overlap, or conflict with the proposed rule.

B. The Market

The majority of hand-held infant carriers are produced and/or marketed by juvenile product manufacturers and distributors. A potential exception is the Moses basket (whose inclusion in the scope as a type of hand-held bassinet or cradle is under consideration by the Commission), which are often marketed by bedding manufacturers and distributors. The Commission estimates that currently, there are at least 43 suppliers of hand-held infant carriers to the U.S. market. Eleven are domestic manufacturers, and 10 are domestic importers. There are also two foreign firms—a foreign manufacturer and an importer that imports products from foreign companies and distributes them from outside of the United States. An additional 20 domestic firms supply Moses basket bedding, along with Moses baskets, whose source is unknown.

Hand-held infant carriers from six of the 43 firms have been certified as compliant with ASTM F2050 by the JPMA, the major U.S. trade association that represents juvenile product manufacturers and importers. Three firms claim compliance with F2050; and four have JPMA-certified strollers with hand-held infant carrier attachments. It is assumed that the hand-held infant carriers supplied by all 13 of these firms will be in compliance with the voluntary standard. Of the remaining 30 firms supplying noncompliant hand-held infant carriers, the majority (25 firms) supply products that are newly covered due to the expanded scope of ASTM F2050-12 (20 supply Moses baskets, 3 supply bassinet attachments for strollers, and 2 supply other types of bassinet-style carriers).

The market data available is limited to infant car seats, which represented nearly the entire hand-held infant carrier market under prior versions of ASTM F2050. According to a 2005 survey conducted by the American Baby Group (2006 Baby Products Tracking Study), 68 percent of new mothers own infant car seats. Approximately 25 percent of infant car seats were handed down or purchased secondhand. Thus, about 75 percent of infant car seats were acquired new. This suggests annual sales of about 2.1 million infant car seats ($.68 \times .75 \times 4.1$ million births per year).[2] These 2.1 million infant car seats represent the minimum number of units sold per year that might be affected by the proposed handheld infant carrier standard. It is unknown how many Moses baskets and other bassinet/cradle-style carriers are sold annually.

C. Reason for Agency Action and Legal Basis for Proposed Rule

The Danny Keysar Child Product Safety Notification Act, section 104 of the CPSIA, requires the CPSC to promulgate a mandatory standard for hand-held infant carriers that is substantially the same as, or more stringent than, the voluntary standard. CPSC worked closely with ASTM to develop the new requirements and test procedures that have been added to the voluntary standard since 2010. These new requirements address several known hazard patterns and will help to reduce injuries and deaths in hand-held carriers, and they have resulted in the current voluntary standard, F2050-12, upon which the proposed rule is based.

However, the Commission proposes adding one new requirement to F2050-12, as well as modifying the methodology for the existing handle auto-lock test. The new requirement would mandate a new warning label, as described in Section VI (A), which addresses strangulation and suffocation hazards that have occurred as a result of incorrect or nonuse of harness straps. The modification proposed by the

[2] U.S. Department of Health and Human Services, Centers for Disease Control and Prevention (CDC), National Center for Health Statistics, National Vital Statistics System, ''Births: Final Data for 2009,'' *National Vital Statistics Reports* Volume 60, Number 1 (November 2011): Table I. Number of births in 2009 is rounded from 4,130,665.

Commission is that an aluminum cylinder, designed as a surrogate for a 6-month old infant, be used in lieu of the CAMI dummy in the handle auto-lock test. This proposed change would result in consistent test results because the cylinder does not wedge into the carrier padding like the CAMI dummy, and placement of the cylinder is less likely to affect the outcome of the test.

D. Requirements of the Proposed Rule

The Commission proposes adopting the voluntary ASTM standard for hand-held infant carriers (F2050-12), with a new warning label requirement, and a modification of the handle auto-lock test. Some of the more significant requirements of the current voluntary standard for hand-held infant carriers (ASTM F2050-12) are listed below:

- Carry handle integrity—a series of endurance and durability tests are intended to ensure that rigid, adjustable handles do not break or unlock during use.
- Carry handle auto-locking—intended to address incidents that have occurred when the rigid, adjustable handles switched positions unexpectedly.
- Restraints—intended to minimize the fall hazard associated with inclined hand-held carriers while simultaneously minimizing the potential for injury or death in flat bassinet/cradle products where restraints can pose a strangulation hazard.
- Slip resistance—intended to prevent slipping when the hand-held infant carrier is placed on a slightly inclined surface (10 degrees).

The voluntary standard also includes: (1) Torque and tension tests to ensure that components cannot be removed; (2) requirements for several hand-held infant carrier features to prevent entrapment and cuts (minimum and maximum opening size, coverage of exposed coil springs, small parts, hazardous sharp edges or points, smoothness of wood parts, and edges that can scissor, shear, or pinch); (3) marking and labeling requirements; (4) requirements for the permanency and adhesion of labels; (5) requirements for instructional literature; and (6) toy accessory requirements. ASTM F2050–12 includes no reporting or recordkeeping requirements. The Commission proposes adding a new warning label content and placement requirement and using the more appropriate cylinder surrogate for the handle auto-lock testing.

The carry handle auto-locking requirement applies only to hand-held infant carriers that are rigid, adjustable, rotate about a singular axis, and lock into the manufacturer's designated carry position; therefore, many suppliers, most notably Moses basket suppliers, would not be affected. Several models of hand-held infant carriers with these types of handles would be able to pass the revised test without modifying their product(s). The simplest and most effective way to meet the requirement is to add auto-lock positions close to the one intended for use. This would prevent the handle from moving so far out of position and spilling the child from the carrier. While redesign would probably not be necessary, the hard tools used to manufacture the handle's lock positions would need to be modified. These hard tools are usually modified by an outside firm, which means that production would cease and, unless the firm maintains an alternating production schedule, could result in significant downtime for the firm's production process.

The revised warning would change the size, location, wording, and presentation to highlight better the dangers associated with only partially buckling children into hand-held carriers. A pictogram is included as part of the modified warning for hand-held carrier seats intended to be used as restraints in motor vehicles. The warning would be required on the product itself, as well as within the product's instructional literature. Changes to warning labels are not expected to have a significant impact on suppliers. Typically, warning labels that are placed on fabric, such as the revised strangulation warning, are less costly than those used on plastic or metal.

E. Other Federal or State Rules

The Commission is in the process of implementing sections 14(a)(2) and 14(i)(2) of the Consumer Product Safety Act (CPSA), as amended by the CPSIA. Section 14(a)(2) of the CPSA requires every manufacturer of a children's product that is subject to a children's product safety rule to certify, based on third party testing, that the product complies with all applicable safety rules. Section 14(i)(2) of the CPSA requires the Commission to establish protocols and standards (i) for ensuring that a children's product is tested periodically and when there has been a material change in the product, (ii) for the testing of representative samples to ensure continued compliance, (iii) for verifying that a product tested by a conformity assessment body complies with applicable safety rules, and (iv) for safeguarding against the exercise of undue influence on a conformity assessment body by a manufacturer or private labeler.

Because hand-held infant carriers will be subject to a mandatory standard, they will also be subject to the third party testing requirements of section 14(a)(2) of the CPSA when the mandatory standard and the notice of requirements become effective.

F. Impact of the Proposal on Small Business

There are approximately 43 firms currently known to be marketing hand-held infant carriers in the United States. Under U.S. Small Business Administration (SBA) guidelines, a manufacturer of hand-held infant carriers is small if it has 500 or fewer employees, and importers and wholesalers are considered small if they have 100 or fewer employees. Based on these guidelines, 29 are small firms—6 domestic manufacturers, 4 domestic importers, and 19 firms supplying Moses baskets whose supply source is unknown. The remaining firms are five large domestic manufacturers, six large domestic importers, one foreign manufacturer, one foreign importer, and one large firm supplying Moses baskets from an unknown source. There may be additional unknown small hand-held infant carrier suppliers operating in the U.S. market.

Small Manufacturers. The expected impact on small manufacturers of the proposed standard will differ based on whether their hand-held infant carriers are already compliant with F2050-09. Firms whose hand-held infant carriers meet the requirements of F2050–09 are likely to continue to comply with the voluntary standard as new versions are published. In addition, they are likely to meet any new standard within 6 months of approval because this is the amount of time JPMA allows for products in their certification program to shift to a new standard. Many of these firms are active in the ASTM standard development process, and compliance with the voluntary standard is part of an established business practice. Therefore, it is likely that firms supplying hand-held infant carriers that comply with ASTM F2050–09 (which went into effect for JPMA certification purposes in April 2010) would also likely comply with F2050–12 by March 2013, even in the absence of a mandatory standard. It should be noted, however, that because the scope of F2050-09 is more limited than the scope of F2050–12, only firms supplying infant car seats would be expected to have developed a pattern of compliance. However, staff believes that firms that manufacture JPMA-certified strollers with attachments that can be used separately as hand-held carriers will also meet ASTM F2050–12 by

March 2013; having developed a pattern of compliance for strollers, they would likely choose to meet any related ASTM standards as well.

Given these considerations, it is unlikely that the direct impact on manufacturers whose products are likely to meet the requirements of ASTM F2050–12 (four of six small domestic manufacturers) will be significant. Modifying warning labels and updating instructional literature is a small cost for most firms. It is possible that one or more firms might have to modify their carry handles to continue to pass the auto-locking test, but this would most likely result in modifying their hard tools to add locking positions, rather than a complete product redesign.

Meeting ASTM F2050–12's requirements could necessitate product redesign for at least some hand-held infant carriers not believed to be compliant with F2050–09 (two of six small domestic manufacturers), regardless of the proposed modifications. A redesign would be minor if most of the changes involve adding straps and fasteners or using different mesh or fabric, but the costs could be more significant if changes to the frame are required, including changes to the handles. Some firms have estimated product redesigns, including engineering time, prototype development, tooling, and other incidental costs to reach approximately $500,000. Consequently, the proposed rule could potentially have a significant direct impact on small manufacturers whose products do not conform to F2050–09. However, because most products would probably not need to be completely redesigned, actual costs are likely to be lower than the $500,000 level, and any direct impact may be mitigated if costs are treated as new product expenses that can be amortized.

It is possible that one or both of the firms whose hand-held infant carriers are neither certified as compliant, nor claim compliance with F2050–09, in fact, are compliant with the standard. The Commission has identified many such cases with other products. To the extent that some of these firms may supply compliant hand-held infant carriers and have developed a pattern of compliance with the voluntary standard, the direct impact of the proposed standard will be less significant than described above.

In addition to the direct impact of the proposed standard described above, there are indirect impacts. These impacts are considered indirect because they do not arise directly as a consequence of the hand-held infant carrier rule's requirements. Nonetheless, they could be significant. Once the rule becomes final and the notice of requirements is in effect, all manufacturers will be subject to the additional costs associated with the third party testing and certification requirements. This will include any physical and mechanical test requirements specified in the final rule; lead and phthalates testing is already required, and hence, it is not included here.[3]

Based on durable nursery product industry input and confidential business information supplied for the development of the third party testing rule, testing to the ASTM voluntary standard could cost $500–$1,000 per model sample. Testing overseas could potentially reduce some testing costs, but that may not always be practical.

On average, each small domestic manufacturer supplies two different models of hand-held infant carriers to the U.S. market annually. Therefore, if third party testing were conducted every year on a single sample for each model, third party testing costs for each manufacturer would be about $1,000–$2,000 annually. Based on a review of firm revenues, the impact of third party testing to ASTM F2050–12 is unlikely to be significant if only one hand-held infant carrier sample per model is required. However, if more than one sample would be needed to meet the testing requirements, it is possible that third party testing costs could have a significant impact on one or more of the small manufacturers.

Small Importers. Importers of hand-held infant carriers would need to find an alternate source if their existing supplier does not come into compliance with the requirements of the proposed rule, which may be the case with all four small importers of hand-held infant carriers, none of which is believed to be in compliance with F2050–09. Some could respond to the rule by discontinuing the import of their noncomplying hand-held infant carriers, possibly discontinuing the product line altogether. However, the impact of such a decision could be mitigated by replacing the noncompliant hand-held infant carriers with a compliant alternative. Deciding to import an alternative product would be a reasonable and realistic way to offset any lost revenue.

As is the case with manufacturers, all importers will be subject to third party testing and certification requirements, and consequently, will experience costs similar to those for manufacturers if their supplying foreign firm(s) does not perform third party testing. The resulting costs could have a significant impact on a few small importers that must perform the testing themselves if more than one sample per model is required.

Moses Basket Suppliers. There are 19 small firms supplying Moses baskets to the U.S. market. Most of these firms also supply bedding; some of them manufacture the bedding, while others act as importers. The Commission has been unable to determine the source of the Moses baskets themselves, although it is likely that most sellers purchase them from other suppliers, either foreign or domestic. Because these products are recent potential additions to the scope of ASTM F2050, it is unlikely that any of them has been designed to comply with this standard. However, it is possible that many might be able to comply with the standard with minimal modifications. Moses baskets generally do not use restraints, so the biggest changes might be the addition of warnings and instructional literature. Alternatively, Moses basket suppliers could remove themselves from the scope of the proposed rule by removing the handles from their products. Because most Moses baskets come with warnings against carrying an infant in the basket, this would be a reasonable change for suppliers to make.

As with manufacturers and importers, all Moses basket suppliers within the scope of the proposed rule will be subject to third party testing and certification requirements, and consequently, they could experience testing costs if their supplying firm(s) does not perform third party testing. Because Moses baskets would not be subject to most of the mechanical tests in the proposed standard, it is expected that third party testing costs, at most, will be half that of other types of hand-held infant carriers, or approximately $250–$500 per model sample. The resulting costs could have a significant impact on a few small firms that must perform the testing themselves, even if only one sample per model is required.

G. Alternatives

Under the Danny Keysar Child Product Safety Notification Act, one alternative that would reduce the impact on small entities is to make the voluntary standard mandatory with no modifications. Doing so would eliminate the impact on the four small manufacturers with compliant products. However, because of the number and severity of the incidents associated with

[3] Hand-held infant carrier suppliers already must third party test their products to the lead and phthalate requirements. Therefore, these costs are left out of the analysis above.

falls and restraints, staff does not recommend this alternative.

A second alternative would be to set an effective date later than the proposed 6 months, which is generally considered sufficient time for suppliers to come into compliance with a proposed rule. Setting a later effective date would allow suppliers additional time to modify and/or develop compliant hand-held infant carriers and spread the associated costs over a longer period of time.

The Commission invites comments describing the possible impact of this rule on manufacturers and importers, as well as comments containing other information describing how this rule will affect small businesses.

IX. Environmental Considerations

The Commission's regulations address whether we are required to prepare an environmental assessment or an environmental impact statement. These regulations provide a categorical exclusion for certain CPSC actions that normally have ''little or no potential for affecting the human environment.'' Among those actions are rules or safety standards for consumer products. 16 CFR 1021.5(c)(1). The proposed rule falls within the categorical exclusion.

X. Paperwork Reduction Act

This proposed rule contains information collection requirements that are subject to public comment and review by the Office of Management and Budget (OMB) under the Paperwork Reduction Act of 1995 (PRA) (44 U.S.C. 3501–3521). In this document, pursuant to 44 U.S.C. 3507(a)(1)(D), we set forth:

- A title for the collection of information;
- A summary of the collection of information;
- A brief description of the need for the information and the proposed use of the information;
- A description of the likely respondents and proposed frequency of response to the collection of information;
- An estimate of the burden that shall result from the collection of information; and
- Notice that comments may be submitted to the OMB.

Title: Safety Standard for Hand-Held Infant Carriers.

Description: The proposed rule would require each hand-held infant carrier to comply with ASTM F2050–12, Standard Consumer Safety Specification for Hand-Held Infant Carriers. Sections of ASTM F2050–12 contain requirements for marking, labeling, and instructional literature. These requirements fall within the definition of ''collection of information,'' as defined in 44 U.S.C. 3502(3).

Description of Respondents: Persons who manufacture or import hand-held infant carriers.

Estimated Burden: We estimate the burden of this collection of information as follows:

TABLE 1—ESTIMATED ANNUAL REPORTING BURDEN

16 CFR Section	Number of respondents	Frequency of responses	Total annual responses	Hours per response	Total burden hours
1221	43	4	172	1	172

Our estimates are based on the following:

Section 8.1 of ASTM F 2050–12 requires that the name of the manufacturer, distributor, or seller, and either the place of business (city, state, and mailing address, including zip code) or telephone number, or both, to be marked clearly and legibly on each product and its retail package. Section 8.2 of ASTM F 2050–12 requires a code mark or other means that identifies the date (month and year, as a minimum) of manufacture.

There are 43 known entities supplying hand-held infant carriers to the U.S. market. All 43 firms are assumed to use labels already on both their products and their packaging, but they might need to make some modifications to their existing labels. The estimated time required to make these modifications is about 1 hour per model. Each entity supplies an average of four different models of hand-held infant carriers; therefore, the estimated burden associated with labels is 1 hour per model × 43 entities × 4 models per entity = 172 hours. We estimate the hourly compensation for the time required to create and update labels is $27.55 (U.S. Bureau of Labor Statistics, ''Employer Costs for Employee Compensation,'' March 2012, Table 9, total compensation for all sales and office workers in goods-producing private industries: *http://www.bls.gov/ncs/*). Therefore, the estimated annual cost to industry associated with the labeling requirements is $4,738.60 ($27.55 per hour × 172 hours = $4,738.60). There are no operating, maintenance, or capital costs associated with the collection.

Section 9.1 of ASTM F2050–12 requires instructions to be supplied with the product. Hand-held infant carriers are products that generally require installation or assembly, and products sold without such information would not be able to compete successfully with products supplying this information. Under the OMB's regulations (5 CFR 1320.3(b)(2)), the time, effort, and financial resources necessary to comply with a collection of information that would be incurred by persons in the ''normal course of their activities'' are excluded from a burden estimate, where an agency demonstrates that the disclosure activities required to comply are ''usual and customary.'' Therefore, because we are unaware of hand-held infant carriers that generally require installation or some assembly but lack any instructions to the user about such installation or assembly, we estimate tentatively that there are no burden hours associated with section 9.1 of ASTM F 2050–12 because any burden associated with supplying instructions with hand-held infant carriers would be ''usual and customary'' and not within the definition of ''burden'' under the OMB's regulations.

Based on this analysis, the proposed standard for hand-held infant carriers would impose a burden to industry of 172 hours at a cost of $4,728.60 annually.

In compliance with the PRA (44 U.S.C. 3507(d)), we have submitted the information collection requirements of this rule to the OMB for review. Interested persons are requested to submit comments regarding information collection by January 9, 2013, to the Office of Information and Regulatory Affairs, OMB (see the **ADDRESSES** section at the beginning of this notice).

Pursuant to 44 U.S.C. 3506(c)(2)(A), we invite comments on:

- Whether the collection of information is necessary for the proper performance of the CPSC's functions, including whether the information will have practical utility;
- The accuracy of the CPSC's estimate of the burden of the proposed collection of information, including the validity of the methodology and assumptions used;

- Ways to enhance the quality, utility, and clarity of the information to be collected;
- Ways to reduce the burden of the collection of information on respondents, including the use of automated collection techniques, when appropriate, and other forms of information technology; and
- The estimated burden hours associated with label modification, including any alternative estimates.

XI. Preemption

Section 26(a) of the CPSA, 15 U.S.C. 2075(a), provides that where a consumer product safety standard is in effect and applies to a product, no state or political subdivision of a state may either establish or continue in effect a requirement dealing with the same risk of injury unless the state requirement is identical to the federal standard. Section 26(c) of the CPSA also provides that states or political subdivisions of states may apply to the Commission for an exemption from this preemption under certain circumstances. Section 104(b) of the CPSIA refers to the rules to be issued under that section as ''consumer product safety rules,'' thus implying that the preemptive effect of section 26(a) of the CPSA would apply. Therefore, a rule issued under section 104 of the CPSIA will invoke the preemptive effect of section 26(a) of the CPSA when it becomes effective.

XII. Certification and Notice of Requirements (NOR)

Section 14(a)(2) of the CPSA imposes the requirement that children's products subject to a children's product safety rule under the CPSA, or to a similar rule, ban, standard, or regulation under any other act enforced by the Commission, must be certified as complying with all applicable CPSC-enforced requirements. 15 U.S.C. 2063(a)(2). For children's products, such certification must be based on tests on a sufficient number of samples by a third party conformity assessment body accredited by the Commission to test according to the applicable requirements. As discussed in section I of this preamble, section 104(b)(1)(B) of the CPSIA refers to standards issued under this section as ''consumer product safety standards.'' Accordingly, a safety standard for hand-held infant carriers issued under section 104 of the CPSA is a consumer product safety rule that is subject to the testing and certification requirements of section 14 of the CPSA. Because hand-held infant carriers are children's products, they must be tested by a third party conformity assessment body whose accreditation has been accepted by the CPSC. Notices of requirements (NORs) provide the criteria and process for our acceptance of accreditation of third party conformity assessment bodies.

On May 24, 2012, the Commission published in the Federal Register the proposed rule, *Requirements Pertaining to Third Party Conformity Assessment Bodies,* 77 FR 331086, which, when finalized, would establish the general requirements and criteria concerning testing laboratories. These include the requirements and procedures for CPSC acceptance of the accreditation of a laboratory to test children's products in support of the certification required by section 14(a)(2) of the CPSA. The proposed rule, at 16 CFR part 1112, *Requirements Pertaining to Third Party Conformity Assessment Bodies,* lists the children's product safety rules for which the CPSC has published NORs for laboratories. In this document, the Commission is proposing to amend the list in 16 CFR part 1112, once that rule becomes final, to include the hand-held infant carrier standard, once finalized, along with the other children's product safety rules for which the CPSC has issued NORs.

Laboratories applying for acceptance as a CPSC-accepted third party conformity assessment body to test to the new standard for hand-held infant carriers would be required to meet the third party conformity assessment body accreditation requirements in 16 CFR part 1112, *Requirements Pertaining to Third Party Conformity Assessment Bodies,* once that rule becomes final. When a laboratory meets the requirements as a CPSC-accepted third party conformity assessment body, it can apply to the CPSC to have 16 CFR part 1225, *Safety Standard for Hand-Held Infant Carriers* included in its scope of accreditation of CPSC safety rules listed for the laboratory on the CPSC Web site at: *http://www.cpsc.gov/labsearch*.

The final NOR will base the CPSC laboratory accreditation requirements on the performance standard set forth in the final rule for the safety standard for hand-held infant carriers and the test methods incorporated within that standard. The Commission may recognize limited circumstances in which the Commission will accept certification based on product testing conducted before the Commission's acceptance of accreditation of laboratories for testing hand-held infant carriers (also known as retrospective testing) in the final NOR. The Commission seeks comments on any issues regarding the testing requirements of the proposed rule for hand-held infant carriers and the accompanying proposed NOR.

XIII. Request for Comments

This proposed rule begins a rulemaking proceeding under section 104(b) of the CPSIA to issue a consumer product safety standard for hand-held carriers. We invite all interested persons to submit comments on any aspect of the proposed rule. Comments should be submitted in accordance with the instructions in the **ADDRESSES** section at the beginning of this notice.

We specifically seek comments from the public on whether Moses baskets should be included in this safety standard. If Moses baskets should be included in this safety standard, does the present definition cover Moses baskets? And if the present definition does not cover Moses baskets, how should it be amended to cover them?

We also seek comment concerning the surrogate used in the handle auto-locking test. Specifically, the Commission asks if the test cylinder described in this preamble and in the proposed rule is an appropriate surrogate for a six-month old infant. Is there another surrogate—in particular, the infant hinge gauge—that is as likely or more likely to identify those hand-held infant carriers that pose the hazards identified in the handle lock test?

List of Subjects

16 CFR Part 1112

Administrative practice and procedure, Audit, Consumer protection, Reporting and recordkeeping requirements, Third party conformity assessment body.

16 CFR Part 1225

Consumer protection, Imports, Incorporation by reference, Infants and children, Labeling, Law enforcement, and Toys.

Therefore, the Commission proposes to amend Title 16 of the Code of Federal Regulations to read as follows:

PART 1112—REQUIREMENTS PERTAINING TO THIRD PARTY CONFORMITY ASSESSMENT BODIES

1. The authority citation for part 1112 continues to read as follows:

Authority: Pub. L. 110–314, section 3, 122 Stat. 3016, 3017 (2008); 15 U.S.C. 2063.

2. Amend § 1112.15 by adding paragraph (b)(35) to read as follows:

§ 1112.15 When can a third party conformity assessment body apply for CPSC acceptance for a particular CPSC rule and/or test method?

* * * * *

(b)

(35) 16 CFR part 1225, Safety Standard for Hand-Held Infant Carriers.

3. Add part 1225 to read as follows:

PART 1225—SAFETY STANDARD FOR HAND-HELD INFANT CARRIERS

Sec.
1225.1 Scope.
1225.2 Requirements for hand-held infant carriers.

Authority: The Consumer Product Safety Improvement Act of 2008, Pub. L. 110–314, § 104, 122 Stat. 3016 (August 14, 2008).

§ 1225.1 Scope.

This part establishes a consumer product safety standard for hand-held infant carriers.

§ 1225.2 Requirements for hand-held infant carriers.

(a) Except as provided in paragraph (b) of this section, each hand-held infant carrier must comply with all applicable provisions of ASTM F 2050–12, Standard Consumer Safety Specification for Hand-Held Infant Carriers, approved on July 1, 2012. The Director of the Federal Register approves this incorporation by reference in accordance with 5 U.S.C. 552(a) and 1 CFR part 51. You may obtain a copy from ASTM International, 100 Bar Harbor Drive, P.O. Box 0700, West Conshohocken, PA 19428; *http://www.astm.org*. You may inspect a copy at the Office of the Secretary, U.S. Consumer Product Safety Commission, Room 820, 4330 East West Highway, Bethesda, MD 20814, telephone 301–504–7923, or at the National Archives and Records Administration (NARA). For information on the availability of this material at NARA, call 202–741–6030, or go to: *http://www.archives.gov/federal_register/code_of_federal regulations/ibr_locations.html*.

(b) Comply with the ASTM F2050–12 standard with the following additions or exclusions:

(1) In addition to complying with section 2.3 *Other References*, comply with the following:

(i) 2.3 *Other References*: Test Cylinder A (see Fig. X)

(ii) [Reserved]

(2) Instead of complying with section 6.1.3 of ASTM F2050–12, comply with the following:

(i) 6.1.3 The carry handle shall lock in a position forward or rearward of the manufacturer's designated carry position such that an unrestrained Test Cylinder A (see Figure X) does not fall out of the carrier when tested in accordance with 7.1.2 through 7.1.4.

(ii) [Reserved]

(3) Instead of complying with section 7.1.1 of ASTM F2050–12, comply with the following:

(i) 7.1.1 Without a dummy in the carrier, secure the harness according to the manufacturer's instructions, and adjusting so that the harness along its entire exposed length contacts the seating surface. Position Test Cylinder A centrally against the backrest of the carrier in such a way that the bottom edge is in contact with the seat/back junction line (see Figure Y).

(ii) [Reserved]

(4) Instead of complying with Section 8.3.2 of ASTM F2050–12, comply with the following:

(i) 8.3.2 The warning statements shall address the following except as otherwise noted.

(ii) [Reserved]

(5) Instead of complying with section 8.3.2.3 of ASTM F2050–12, comply with the following:

(i) 8.3.2.3 *Strangulation Hazard*:

(ii) 8.3.2.3.1 Carriers intended for use as infant restraint devices in motor vehicles shall contain the following warning label. This label requires exact language (including the use of bold font and uppercase characters as depicted) and a specific location:

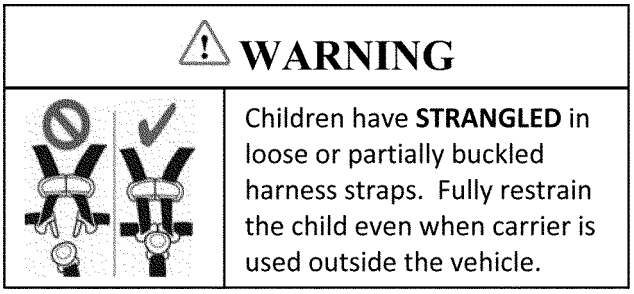

(iii) 8.3.2.3.2 The area of the pictogram is to be at least 1.09 in² (706 mm²) while not exceeding the size of the airbag warning pictogram in the label required under FMVSS No. 213. The message area in the label shall be no less than 4.65 in² (30 cm²), while not exceeding the size of the airbag warning message area in the label required under FMVSS No. 213. The pictogram shall be black with a red circle and slash on a white background and green check mark. The heading area shall be yellow with the word ''warning'' and the alert symbol in black. The warning label shall be a separate and independent label from the airbag warning label required in FMVSS No. 213. The warning label shall be permanently affixed to the outer surface of the cushion or padding in or adjacent to the area where a child's head would rest, so that the label is plainly visible and easily readable.

(iv) 8.3.2.3.3 The following warning is required only for carriers not intended for use in a motor vehicle and are not hand-held bassinets/cradles. This warning requires exact language (including the use of bold font and uppercase characters as depicted):

WARNING

Children have **STRANGLED** in loose or partially buckled harness straps.
Fully restrain the child at all times.

(6) Instead of complying with section 9.1.1 of ASTM F2050–12, comply with the following:

(i) 9.1.1 The instructions shall contain statements, which address the warning statements in 8.3.2. For carriers intended for use as infant restraint devices in motor vehicles, the warning statement contained in the warning label depicted in 8.3.2.3 must also be included. In addition, the instructions shall include the following statements:

(ii) [Reserved]

(7) In addition to Figure 2, use the following:

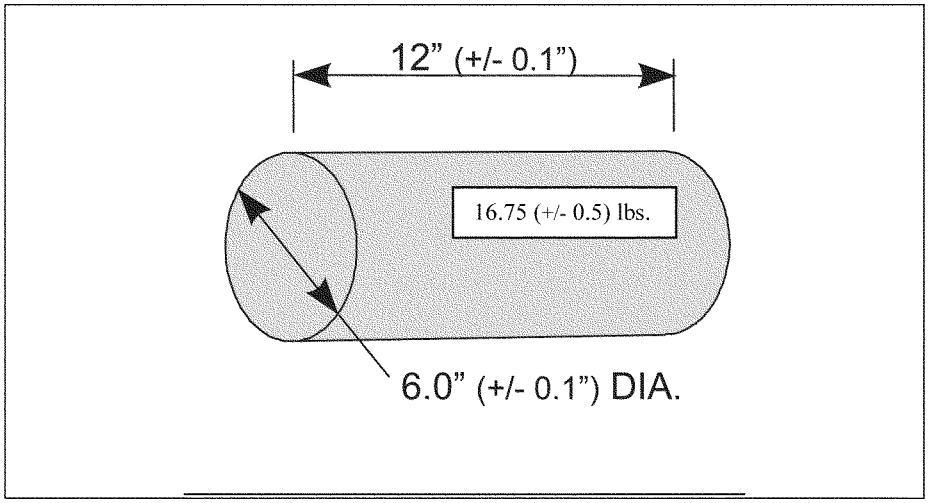

FIG. X Test Cylinder A

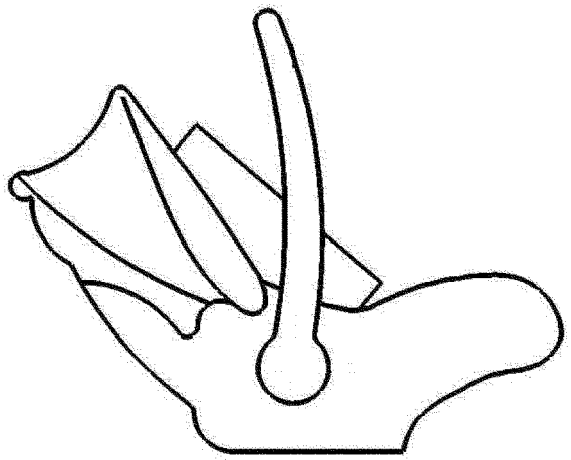

FIG. Y Test Cylinder Placed in Carrier

Dated: December 3, 2012.

Todd A. Stevenson,

Secretary, Consumer Product Safety Commission.

[FR Doc. 2012–29584 Filed 12–7–12; 8:45 am]

BILLING CODE 6355–01–P

DEPARTMENT OF VETERANS AFFAIRS

38 CFR Part 3

RIN 2900–AN89

Secondary Service Connection for Diagnosable Illnesses Associated With Traumatic Brain Injury

AGENCY: Department of Veterans Affairs.

ACTION: Proposed rule.

SUMMARY: The Department of Veterans Affairs (VA) is amending its adjudication regulations concerning service-connection. This amendment is necessary to act upon a report of the National Academy of Sciences, Institute of Medicine (IOM), *Gulf War and Health, Volume 7: Long-Term Consequences of Traumatic Brain Injury,* regarding the association between traumatic brain injury (TBI) and five diagnosable illnesses. The intended effect of this amendment is to establish that if a veteran who has a service-connected TBI also has one of these diagnosable illnesses, then that

illness will be considered service connected as secondary to the TBI.

DATES: *Effective Date:* Comments must be received by VA on or before February 8, 2013.

ADDRESSES: Written comments may be submitted through *www.Regulations.gov;* by mail or hand-delivery to Director, Regulations Management (02REG), Department of Veterans Affairs, 810 Vermont Ave. NW., Room 1068, Washington, DC 20420; or by fax to (202) 273–9026. (This is not a toll free number.) Comments should indicate that they are submitted in response to ''RIN 2900–AN89—Secondary Service Connection for Diagnosable Illnesses Associated with Traumatic Brain Injury.'' Copies of comments received will be available for public inspection in the Office of Regulation Policy and Management, Room 1063B, between the hours of 8:00 a.m. and 4:30 p.m., Monday through Friday (except holidays). Please call (202) 461–4902 for an appointment. (This is not a toll free number.) In addition, during the comment period, comments may be viewed online through the Federal Docket Management System (FDMS) at *www.Regulations.gov.*

FOR FURTHER INFORMATION CONTACT: Thomas J. Kniffen, Chief, Regulations Staff (211D), Compensation and Pension Service, Veterans Benefits Administration, Department of Veterans Affairs, 810 Vermont Avenue NW., Washington, DC 20420, (202) 461–9739. (This is not a toll free number.)

SUPPLEMENTARY INFORMATION: This document proposes to amend VA adjudication regulations (38 CFR Part 3) by revising 38 CFR 3.310 to add five diagnosable illnesses as secondary conditions which shall be held to be the proximate result of service-connected TBI.

Scientific Bases for This Rulemaking

In the National Academy of Science IOM Report, Gulf War and Health Volume 7: Long-Term Consequences of Traumatic Brain Injury, the IOM concluded there was ''sufficient evidence of a causal relationship'' (the IOM's highest evidentiary standard) between moderate or severe levels of TBI and diagnosed unprovoked seizures. The IOM found ''sufficient evidence of an association'' between moderate or severe levels of TBI and parkinsonism; dementias (which VA understands to include presenile dementia of the Alzheimer type and post-traumatic dementia); depression (which also was associated with mild TBI); and diseases of hormone deficiency that may result from hypothalamo-pituitary changes.

The medical literature that IOM reviewed included two primary studies and one secondary study on TBI and parkinsonism. One primary study involved 196 Parkinson's patients living in Olmstead County, Minnesota, and the second involved 93 pairs of male twins who were veterans from World War II. The secondary study involved 140 civilian Parkinson's patients in Boston, Massachusetts, who had suffered a TBI severe enough to cause loss of consciousness, blurred or double vision, dizziness, seizures, or memory loss. These three studies support a link between moderate or severe TBI and parkinsonism.

Medical literature supports a link between TBI and the two types of dementias listed above (presenile dementia of the Alzheimer type and post-traumatic dementia). Reported cases show that individuals with TBI often are diagnosed with dementia at ages younger than their early 50s and within 15 years of their injuries. As classic Alzheimer's disease strikes sufferers much later in life, the dementias suffered by TBI victims are unlikely to be classic Alzheimer's dementias. Classic Alzheimer's disease is the most common of many types of dementia that occur in older adults. It is difficult to conclude that Alzheimer's occurring at ages in the 60s or 70s is related to a distant TBI.

The IOM reviewed 4 primary studies of civilians and of troops serving in World War II and the current conflict in Iraq and five secondary studies of mood disorders including major depression. The primary studies generally supported an association between mild, moderate, or severe TBI and major depression within the first twelve months after the injury. Current research does not provide significant evidence to support association more than 12 months following mild TBI. Moderate or severe TBI appears to cause an elevated risk for depression (up to 50% in some research) for at least the first 3 years.

The IOM reviewed five studies on TBI and hypopituitarism, and five studies on TBI and growth hormone insufficiency. The studies generally showed increased risk of those conditions developing within months after a moderate or severe TBI and, although the effects in many cases were acute and eventually resolved, some long-term effects were observed. The medical literature reviewed by IOM supports a link between TBI and diseases of hormone deficiency resulting from hypothalamo-pituitary changes, when the disease manifests within 12 months of a moderate or severe TBI. The presence of other peripherally-mediated endocrinologic disorders (including, but not limited to diabetes mellitus) has no association with TBI.

After careful review of the findings of the NAS Report, Gulf War and Health Volume 7, the Secretary of Veterans Affairs has determined that the scientific evidence present in the NAS Report, Gulf War and Health Volume 7 and other information available to the Secretary indicates that a revision to VA regulations to add the five diagnosable illnesses as secondary conditions is warranted. The five diagnosable illnesses to be added are the following: (1) Parkinsonism following moderate or severe TBI; (2) unprovoked seizures following moderate or severe TBI; (3) dementias (to include presenile dementia of the Alzheimer type and post-traumatic dementia) within 15 years of moderate or severe TBI; (4) depression, if manifest within 3 years of moderate or severe TBI or within 12 months of mild TBI; and (5) diseases of hormone deficiency that result from hypothalamo-pituitary changes manifest within 12 months of moderate or severe TBI.

Section 501(a) of title 38, U.S. Code, establishes the Secretary of Veterans Affairs' general rulemaking authority to prescribe all rules and regulations which are necessary or appropriate to carry out the laws administered by VA. Based on VA's analysis of the scientific evidence discussed in the IOM report as well as the IOM's finding of sufficient evidence of relationships between specific levels of TBI and certain diagnosable illnesses, and all other information available to the Secretary, we propose to amend 38 CFR 3.310 in order to incorporate five diagnosable illnesses as secondary conditions that are the proximate result of service-connected TBI.

The IOM also found associations between TBI and certain behavioral and social problems. These include diminished social relationships, aggressive behaviors, long-term unemployment, and premature death. Under 38 U.S.C. 1110, VA may only grant service connection ''[f]or disability resulting from personal injury suffered or disease contracted in line of duty * * *''. Similarly, § 1310(a) states, ''When any veteran dies * * * from a service-connected or compensable disability, the Secretary shall pay dependency and indemnity compensation to such veteran's surviving spouse, children, and parents.'' VA does not believe it is

necessary to establish new presumptions of service connection for these effects because they are not distinct physical or mental ''disabilities'' for VA compensation purposes. However, the behavioral, social, and occupational effects of TBI and related service-connected conditions may be considered in evaluating the severity of those conditions for compensation purposes as provided in provisions of VA's rating schedule.

In relevant part, § 3.310(a) states: ''[A] disability which is proximately due to or the result of a service-connected disease or injury shall be service connected. When service connection is thus established for a secondary condition, the secondary condition shall be considered a part of the original condition.'' We propose to revise § 3.310 by adding a new subsection (d)(1) that lists five diagnosable illnesses as secondary conditions that shall be held to be proximate results of service-connected TBI.

VA recognizes that not all those who suffer a TBI during military service seek immediate medical assistance and receive a medical assessment of the severity of the TBI. Therefore, proposed paragraph (d)(2) will clarify that neither severity levels nor time limits for manifesting secondary conditions as proximate causes of service-connected TBI shall preclude a veteran from establishing direct service connection under the generally applicable principles of service connection in 38 CFR 3.303 and 3.304.

Determination of the Severity of a TBI

VA and the Department of Defense have established a joint set of factors and criteria for classifying a TBI as mild, moderate, or severe. The factors and criteria were created by a team of physicians from VA and the Department of Defense who are experts on diagnosing and treating TBI. The factors are structural imaging (such as functional magnetic resonance imaging, diffusion tensor imaging, positron emission tomography (PET) scanning), duration of alteration of consciousness/mental state, duration of loss of consciousness, duration of post-traumatic amnesia, and score on the Glasgow Coma Scale. *See* Memorandum by Asst. Secretary of Defense for Health Affairs, ''Traumatic Brain Injury: Definition and Reporting,'' October 1, 2007. *See also* Compensation & Pension Service Training Letter 09–01, January 21, 2009.

We propose to include these severity criteria as a table in § 3.310(d)(3)(i). We also propose to explain in paragraph (d)(3)(ii) that the determination of the severity level is based on the TBI symptoms at the time of injury or shortly thereafter, rather than the current level of functioning. This provision is consistent with established medical principles for assessing the severity of TBI. *See* Memorandum by Asst. Secretary of Defense for Health Affairs, ''Traumatic Brain Injury: Definition and Reporting,'' October 1, 2007. *See also* Compensation & Pension Service Training Letter 09–01, January 21, 2009.

Some veterans may not meet all of the criteria within a particular severity level or may not have been examined for all the factors. We believe the simplest, most efficient, and fairest way to rank such veterans is to apply two rules: (1) VA will not require that a TBI meet all the criteria listed under a certain severity level to classify the TBI under that severity level; and (2) If a TBI meets the criteria relating to loss of consciousness, post-traumatic amnesia, or Glasgow Coma Scale in more than one severity level, then VA will rank the TBI at the highest of those levels. We propose to include these rules in paragraph (d)(3)(ii).

In some cases, it may not be clinically possible to determine the severity of a TBI (e.g., because of a lack of medical records contemporaneous with the injury or medical complications (e.g., medically induced coma)). In such cases, § 3.310(d) would not apply and the veteran's claim would be processed under § 3.310(a) which states that ''disability which is proximately due to or the result of a service-connected disease or injury shall be service connected.''

Paperwork Reduction Act

This document contains no provisions constituting a collection of information under the Paperwork Reduction Act (44 U.S.C. 3501–3521).

Regulatory Flexibility Act

The Secretary of Veterans Affairs hereby certifies that this rule will not have a significant economic impact on a substantial number of small entities as they are defined in the Regulatory Flexibility Act, 5 U.S.C. 601–612. This rule would not affect any small entities. Only VA beneficiaries could be directly affected. Therefore, pursuant to 5 U.S.C. 605(b), this rule is exempt from the initial and final regulatory flexibility analysis requirements of sections 603 and 604.

Executive Orders 13563 and 12866

Executive Orders 13563 and 12866 direct agencies to assess all costs and benefits of available regulatory alternatives and, when regulatory action is necessary, to select regulatory approaches that maximize net benefits (including potential economic, environmental, public health and safety, and other advantages; distributive impacts; and equity). Executive Order 13563 (Improving Regulation and Regulatory Review) emphasizes the importance of quantifying both costs and benefits, reducing costs, harmonizing rules, and promoting flexibility. Executive Order 12866 (Regulatory Planning and Review) defines a ''significant regulatory action,'' which requires review by the Office of Management and Budget (OMB), as ''any regulatory action that is likely to result in a rule that may: (1) Have an annual effect on the economy of $100 million or more or adversely affect in a material way the economy, a sector of the economy, productivity, competition, jobs, the environment, public health or safety, or State, local, or tribal governments or communities; (2) Create a serious inconsistency or otherwise interfere with an action taken or planned by another agency; (3) Materially alter the budgetary impact of entitlements, grants, user fees, or loan programs or the rights and obligations of recipients thereof; or (4) Raise novel legal or policy issues arising out of legal mandates, the President's priorities, or the principles set forth in the Executive Order.''

The economic, interagency, budgetary, legal, and policy implications of this proposed rule have been examined and it has been determined to be a significant regulatory action under the Executive Order 12866.

Unfunded Mandates

The Unfunded Mandates Reform Act of 1995 requires, at 2 U.S.C. 1532, that agencies prepare an assessment of anticipated costs and benefits before issuing any rule that may result in the expenditure by State, local, and tribal governments, in the aggregate, or by the private sector, of $100 million or more (adjusted annually for inflation) in any year. This rule would have no such effect on State, local, and tribal governments, or on the private sector.

Catalog of Federal Domestic Assistance Numbers and Titles

The Catalog of Federal Domestic Assistance program numbers and titles for this proposed rule are 64.109, Veterans Compensation for Service-Connected Disability, and 64.110, Veterans Dependency and Indemnity Compensation for Service-Connected Death.

Signing Authority

The Secretary of Veterans Affairs, or designee, approved this document and authorized the undersigned to sign and submit the document to the Office of the Federal Register for publication electronically as an official document of the Department of John R. Gingrich, Chief of Staff, Department of Veterans Affairs, approved this document on December 4, 2012, for publication.

List of Subjects in 38 CFR Part 3

Administrative practice and procedure, Claims, Disability benefits, Health care, Veterans, Vietnam.

Dated: December 5, 2012.

Robert C. McFetridge,

Director, Regulation Policy and Management, Office of the General Counsel, Department of Veterans Affairs.

For the reasons set out in the preamble, VA proposes to amend 38 CFR part 3 as follows:

PART 3—ADJUDICATION

1. The authority citation for part 3, subpart A continues to read as follows:

Authority: 38 U.S.C. 501(a), unless otherwise noted.

2. Revise § 3.310 by adding paragraph (d), to read as follows:

§ 3.310 Disabilities that are proximately due to, or aggravated by, service-connected disease or injury.

* * * * *

(d) Traumatic brain injury. (1) In a veteran who has a service-connected traumatic brain injury, the following shall be held to be the proximate result of the service-connected traumatic brain injury (TBI), in the absence of clear evidence to the contrary:

(i) Parkinsonism following moderate or severe TBI;

(ii) Unprovoked seizures following moderate or severe TBI;

(iii) Dementias (presenile dementia of the Alzheimer type and post-traumatic dementia) if manifest within 15 years following moderate or severe TBI;

(iv) Depression if manifest within 3 years of moderate or severe TBI, or within 12 months of mild TBI; or

(v) Diseases of hormone deficiency that result from hypothalamo-pituitary changes if manifest within 12 months of moderate or severe TBI.

(2) Neither the severity levels nor the time limits in paragraph (d)(1) of this section preclude a finding of service connection for conditions shown by evidence to be proximately due to service-connected TBI. If a claim does not meet the requirements of paragraph (d)(1) with respect to the time of manifestation or the severity of the TBI, or both, VA will develop and decide the claim under generally applicable principles of service connection without regard to paragraph (d)(1).

(3)(i) For purposes of this section VA will use the following table for determining the severity of a TBI:

Mild	Moderate	Severe
Normal structural imaging LOC = 0–30 min	Normal or abnormal structural imaging LOC >30 min and <24 hours	Normal or abnormal structural imaging. LOC >24 hrs.
AOC = a moment up to 24 hrs	AOC >24 hours. Severity based on other criteria.	
PTA = 0–1 day GCS = 13–15	PTA >1 and <7 days GCS = 9–12	PTA > 7 days. GCS = 3–8.

Note: The factors considered are:
Structural imaging of the brain.
LOC—Loss of consciousness.
AOC—Alteration of consciousness/mental state.
PTA—Post-traumatic amnesia.
GCS—Glasgow Coma Scale. (For purposes of injury stratification, the Glasgow Coma Scale is measured at or after 24 hours.)

(ii) The determination of the severity level under this paragraph is based on the TBI symptoms at the time of injury or shortly thereafter, rather than the current level of functioning. VA will not require that the TBI meet all the criteria listed under a certain severity level in order to classify the TBI at that severity level. If a TBI meets the criteria relating to LOC, PTA, or GCS in more than one severity level, then VA will rank the TBI at the highest of those levels.

(Authority: 38 U.S.C. 501, 1110 and 1131)

[FR Doc. 2012–29709 Filed 12–7–12; 8:45 am]

BILLING CODE 8320–01–P

ENVIRONMENTAL PROTECTION AGENCY

40 CFR Part 52

[EPA–R04–OAR–2010–0935, FRL–9760–5]

Approval and Promulgation of Air Quality Implementation Plans; State of Florida; Regional Haze State Implementation Plan

AGENCY: Environmental Protection Agency (EPA).

ACTION: Proposed rule.

SUMMARY: EPA is proposing to approve certain Best Available Retrofit Technology (BART) and reasonable progress determinations included in a regional haze state implementation plan (SIP) amendment submitted by the State of Florida, through the Florida Department of Environmental Protection (FDEP), on September 17, 2012. These BART and reasonable progress determinations are for sources that are subject to the Clean Air Interstate Rule (CAIR) and were initially included in a July 31, 2012, draft regional haze SIP amendment submitted by FDEP for parallel processing and re-submitted in final form as part of the State's September 17, 2012, regional haze SIP amendment. In this action, EPA also proposes to find that Florida's September 17, 2012, amendment corrects the deficiencies that led to the proposed May 25, 2012, limited approval and proposed December 30, 2011, limited disapproval of the State's entire regional haze SIP, and that Florida's SIP meets all of the regional haze requirements of the Clean Air Act (CAA). EPA is therefore withdrawing the previously proposed limited disapproval of Florida's entire regional haze SIP and proposing full approval. This proposed action supplements the May 25, 2012, proposed limited approval action by superseding the proposed limited approval and replacing it with a proposed full approval. EPA will take final action on

the May 25, 2012, proposal, as supplemented herein, in conjunction with final action on today's proposal.

DATES: Comments must be received on or before January 9, 2013.

ADDRESSES: Submit your comments, identified by Docket ID No. EPA–R04–OAR–2010–0935, by one of the following methods:

1. *www.regulations.gov:* Follow the on-line instructions for submitting comments.
2. *Email: R4-RDS@epa.gov.*
3. *Fax:* 404–562–9019.
4. *Mail:* EPA–R04–OAR–2010–0935, Regulatory Development Section, Air Planning Branch, Air, Pesticides and Toxics Management Division, U.S. Environmental Protection Agency, Region 4, 61 Forsyth Street SW., Atlanta, Georgia 30303–8960.
5. *Hand Delivery or Courier:* Lynorae Benjamin, Chief, Regulatory Development Section, Air Planning Branch, Air, Pesticides and Toxics Management Division, U.S. Environmental Protection Agency, Region 4, 61 Forsyth Street SW., Atlanta, Georgia 30303–8960. Such deliveries are only accepted during the Regional Office's normal hours of operation. The Regional Office's official hours of business are Monday through Friday, 8:30 to 4:30, excluding federal holidays.

Instructions: Direct your comments to Docket ID No. ''EPA–R04–OAR–2010–0935.'' EPA's policy is that all comments received will be included in the public docket without change and may be made available online at *www.regulations.gov,* including any personal information provided, unless the comment includes information claimed to be Confidential Business Information (CBI) or other information whose disclosure is restricted by statute. Do not submit through *www.regulations.gov* or email, information that you consider to be CBI or otherwise protected. The *www.regulations.gov* Web site is an ''anonymous access'' system, which means EPA will not know your identity or contact information unless you provide it in the body of your comment. If you send an email comment directly to EPA without going through *www.regulations.gov,* your email address will be automatically captured and included as part of the comment that is placed in the public docket and made available on the Internet. If you submit an electronic comment, EPA recommends that you include your name and other contact information in the body of your comment and with any disk or CD–ROM you submit. If EPA cannot read your comment due to technical difficulties and cannot contact you for clarification, EPA may not be able to consider your comment. Electronic files should avoid the use of special characters, any form of encryption, and be free of any defects or viruses. For additional information about EPA's public docket visit the EPA Docket Center homepage at *http://www.epa.gov/epahome/dockets.htm.*

Docket: All documents in the electronic docket are listed in the *www.regulations.gov* index. Although listed in the index, some information is not publicly available, i.e., CBI or other information whose disclosure is restricted by statute. Certain other material, such as copyrighted material, is not placed on the Internet and will be publicly available only in hard copy form. Publicly available docket materials are available either electronically in *www.regulations.gov* or in hard copy at the Regulatory Development Section, Air Planning Branch, Air, Pesticides and Toxics Management Division, U.S. Environmental Protection Agency, Region 4, 61 Forsyth Street SW., Atlanta, Georgia 30303–8960. EPA requests that if at all possible, you contact the person listed in the **FOR FURTHER INFORMATION CONTACT** section to schedule your inspection. The Regional Office's official hours of business are Monday through Friday, 8:30 to 4:30, excluding federal holidays.

FOR FURTHER INFORMATION CONTACT: Michele Notarianni, Regulatory Development Section, Air Planning Branch, Air, Pesticides and Toxics Management Division, U.S. Environmental Protection Agency, Region 4, 61 Forsyth Street SW., Atlanta, Georgia 30303–8960. Michele Notarianni can be reached at telephone number (404) 562–9031 and by electronic mail at *notarianni.michele@epa.gov.*

SUPPLEMENTARY INFORMATION:

Table of Contents

I. What Action is EPA Proposing to Take?
II. Summary of Florida's September 17, 2012, Regional Haze SIP Amendment
III. What is EPA's Analysis of Florida's September 17, 2012, Regional Haze SIP Amendment?
IV. What Action is EPA Taking?
V. Statutory and Executive Order Reviews

I. What Action is EPA Proposing to Take?

On March 19, 2010, FDEP submitted a regional haze SIP to address regional haze in Class I areas impacted by emissions from Florida and subsequently amended this SIP submittal on August 31, 2010. EPA proposed a limited disapproval of the Florida regional haze SIP on December 30, 2011, because of deficiencies in the regional haze SIP arising from the State's reliance on CAIR to meet certain regional haze requirements. *See* 76 FR 82219 (December 30, 2011). On May 25, 2012, EPA published an action proposing a limited approval of Florida's regional haze SIP to address the first implementation period. *See* 77 FR 31240. EPA's May 25, 2012, proposed rulemaking covered Florida's March 19, 2010, regional haze SIP and August 31, 2010, regional haze SIP amendment, as well as the State's April 13, 2012, draft regional haze SIP amendment which was submitted for parallel processing. The regional haze SIP, as amended on August 31, 2010, and April 13, 2012, addressed many of the regional haze requirements for Florida under CAA sections 301(a) and 110(k)(3). EPA proposed a limited approval, rather than a full approval, of Florida's regional haze SIP to the extent that it relied on CAIR.

On July 31, 2012, FDEP submitted an additional draft regional haze SIP amendment to evaluate BART and reasonable progress provisions for the remaining electric generating units (EGUs) not addressed in its April 13, 2012, draft SIP amendment.[1] On September 17, 2012, Florida submitted a final SIP amendment that consolidated the proposed changes in the April 13, 2012, and July 31, 2012, draft SIP amendments originally submitted to EPA for parallel processing. This

[1] In the draft SIP amendment provided on July 31, 2012, Florida addressed the 18 reasonable progress units and 11 facilities with BART-eligible EGUs subject to CAIR (a total of 20 EGUs) that were not covered by Florida's April 13, 2012, SIP amendment, and it also amended the SIP to remove Florida's reliance on CAIR to satisfy BART and reasonable progress requirements for the State's affected EGUs. Florida proposed these determinations in the July 31, 2012, proposed amendment and finalized them in the September 17, 2012, final SIP amendment. The facilities addressed for reasonable progress are: City of Gainesville Deerhaven unit 5; Florida Power & Light (FPL) Manatee units 1, 2; FPL Turkey Point units 1, 2; Gulf Power Company Crist unit 7; Lakeland Electric C.D. McIntosh unit 3; JEA Northside/St. Johns River Power Park (SJRPP) units 3, 16, 17; Progress Energy Florida (PEF) Anclote units 1, 2; PEF Crystal River units 1, 2, 3, 4; and Seminole Electric Cooperative, Inc. (SECI) units 1, 2. The facilities addressed for BART are: City of Tallahassee—Arvah B.Hopkins Generating Station (unit 1); PEF Anclote Power Plant (units 1, 2); PEF Crystal River Power Plant (units 1, 2); FP&L Manatee Power Plant (units 1, 2); FPL Martin Power Plant (units 1, 2); FPL Turkey Point Power Plant (units 1, 2); Gulf Power Company Crist Electric Generating Plant (units 6, 7); Gulf Power Company Lansing Smith Plant (units 1, 2); JEA Northside SJRPP (unit 3); Lakeland Electric C.D. McIntosh, Jr. Power Plant (units 1, 2); and Reliant Energy Indian River (units 2, 3).

submittal addressed BART and reasonable progress requirements for certain EGUs where Florida had relied on CAIR to meet BART and reasonable progress regulatory requirements for these units and made changes to the text of its SIP to remove reliance on CAIR for Florida sources. On November 29, 2012 (77 FR 71111), EPA took final action fully approving the unit-specific BART determinations for all of the sources addressed by EPA's May 25, 2012, proposal.

EPA's December 30, 2011, proposed limited disapproval of Florida's regional haze SIP was based on the State's initial reliance on CAIR to satisfy both BART requirements and the requirement for a long-term strategy (LTS) sufficient to achieve the state-adopted reasonable progress goals (RPGs). *See* 76 FR 82221. As mentioned above, Florida's September 17, 2012, SIP amendment replaced reliance on CAIR to satisfy the BART and reasonable progress requirements for its affected EGUs with case-by-case BART and reasonable progress control analyses. To the extent that the SIP's underlying emissions inventories and projections of emissions reductions from upwind states are affected by the implementation of CAIR, the recent decision by the United States Court of Appeals for the District of Columbia Circuit (D.C. Circuit) in *EME Homer Generation, L.P.* v. *EPA,* No. 11–1302 (D.C. Cir., August 21, 2012) (*EME Homer*) to vacate the Cross-State Air Pollution Control Rule (Transport Rule) and keep CAIR in place ensures that any emissions reductions associated with CAIR are sufficiently permanent and enforceable for purposes of this action (see section III.C, below, for further discussion).

EPA is now proposing to take two related actions. First, EPA is proposing to approve the remaining BART and reasonable progress determinations in Florida's September 17, 2012, regional haze SIP amendment not previously addressed in EPA's November 29, 2012, final action.[2] Second, EPA is proposing to find that Florida's September 17, 2012, SIP amendment corrects the deficiencies that led to the December 30, 2011, proposed limited disapproval and the May 25, 2012, limited approval of the State's regional haze SIP and that the regional haze SIP as a whole now meets the regional haze requirements of the CAA. EPA is therefore withdrawing the previously proposed limited disapproval of Florida's entire regional haze SIP and proposing full approval. This proposed action supplements the May 25, 2012, proposed limited approval action by superseding the proposed limited approval and replacing it with a proposed full approval. EPA will take final action on the May 25, 2012, proposal, as supplemented herein, in conjunction with final action on today's proposal.[3]

II. Summary of Florida's September 17, 2012, Regional Haze SIP Amendment

Florida's regional haze SIP identifies 31 EGUs subject to CAIR for assessment for reasonable progress and 23 sources with BART-eligible EGUs that initially relied on CAIR emissions limits for sulfur dioxide (SO_2) and nitrogen oxides (NO_X) to satisfy their obligation to comply with BART requirements. CAIR was promulgated by EPA in 2005 to require significant reductions in emissions of SO_2 and NO_X from EGUs and thus to limit the interstate transport of these pollutants and the ozone and fine particulate matter (PM) they form in the atmosphere. *See* 76 FR 70093. The D.C. Circuit initially vacated CAIR, *North Carolina* v. *EPA,* 531 F.3d 896 (D.C. Cir. 2008), but ultimately remanded the rule to EPA without vacatur to preserve the environmental benefits provided by CAIR, *North Carolina* v. *EPA,* 550 F.3d 1176, 1178 (D.C. Cir. 2008). Subsequent to the remand of CAIR, and in response to the court's decision, EPA issued the Transport Rule to address interstate transport of NO_X and SO_2 in the eastern United States. *See* 76 FR 48208 (August 8, 2011). On August 21, 2012, the D.C. Circuit issued a decision to vacate the Transport Rule. In that decision, it also ordered EPA to continue administering CAIR ''pending the promulgation of a valid replacement.'' *EME Homer Generation, L.P.* v. *EPA,* No. 11–1302 (D.C. Cir., August 21, 2012).[4]

EPA has recognized that prior to the CAIR remand, the State's reliance on CAIR to satisfy BART for NO_X and SO_2 for affected CAIR EGUs was fully approvable and in accordance with 40 CFR 51.308(e)(4). In addition, as explained above, CAIR remains in place until EPA develops a suitable replacement. However, the Florida facilities with EGUs that previously relied on CAIR to satisfy their BART and reasonable progress obligations for SO_2 and NO_X will eventually not be subject to CAIR. FDEP also recognized that CAIR's replacement might not satisfy the regional haze requirements for Florida. Accordingly, FDEP initiated an effort to reassess BART and reasonable progress for all of the facilities that had relied on CAIR to meet regional haze obligations. In its April 13, 2012, draft regional haze SIP amendment, FDEP addressed 13 of the 31 EGUs subject to reasonable progress analysis and 12 of the 23 facilities with BART-eligible EGUs. In its July 31, 2012, draft amendment, Florida addressed the remaining 18 reasonable progress units and the remaining 11 facilities with BART-eligible EGUs subject to CAIR (a total of 20 EGUs). The State's September 17, 2012, amendment finalized these BART and reasonable progress determinations addressed in its April 13, 2012, and July 31, 2012, draft SIP amendments, and on November 29, 2012, EPA finalized full approval of the BART determinations addressed in the April 13, 2012, amendment. *See* 77 FR 71111. Table 1 lists the 18 facilities subject to reasonable progress analysis that EPA is acting on in this notice and Table 2 lists the 11 BART-eligible EGUs that EPA is acting on in this notice.

TABLE 1—FACILITIES SUBJECT TO REASONABLE PROGRESS ANALYSIS WITH UNIT(S)[5] ALSO SUBJECT TO CAIR

[Italicized units are also subject to BART]

City of Gainesville—Gainesville Regional Utilities (GRU) Deerhaven (Unit 5).
FPL—Manatee (Units *1, 2*).
FPL—Turkey Point (Units *1, 2*).
Gulf Power Company—Crist (Unit *7*).
Lakeland Electric—C.D. McIntosh (Unit 6).
JEA—Northside/SJRPP (Units *3,* 16, 17).
PEF—Anclote (Units *1, 2*).
PEF—Crystal River (Units *1, 2,* 3, 4).
SECI—(Units 1, 2).

TABLE 2—BART-ELIGIBLE FACILITIES WITH UNIT(S) SUBJECT TO CAIR

City of Tallahassee—Arvah B. Hopkins Generating Station (Unit 1).
PEF—Anclote Power Plant (Units 1, 2).
PEF—Crystal River Power Plant (Units 1, 2).
FPL—Manatee Power Plant (Units 1, 2).
FPL—Martin Power Plant (Units 1, 2).
FPL—Turkey Point Power Plant (Units 1, 2).
Gulf Power Company—Crist Electric Generating Plant (Units 6, 7).
Gulf Power Company—Lansing Smith Plant (Units 1, 2).
JEA Northside—SJRPP (Unit 3).
Lakeland Electric—C.D. McIntosh (Units 1, 5).
Reliant Energy Indian River—Indian River Plant (Units 2, 3).

[2] See footnote 1, above.

[3] Today's action does not affect the November 29, 2012, final action fully approving the BART determinations for the sources addressed by EPA's May 25, 2012, proposal.

[4] That decision is not yet final as the mandate has not issued and on October 5, 2012, EPA filed a petition asking for rehearing *en banc.*

[5] Emissions unit numbers reflect the numbering system used by FDEP, which may differ from the facilities' numbering methodology.

III. What is EPA's analysis of Florida's September 17, 2012, regional haze SIP amendment?

A. Facilities Subject to Reasonable Progress Analysis

As discussed above, a portion of the State's September 17, 2012, regional haze SIP amendment addresses 18 of the EGUs subject to CAIR and a reasonable progress analysis. Ten of these emissions units are also subject to BART review under the Regional Haze Rule (RHR): FPL—Manatee Units 1, 2 ; FPL—Turkey Point Units 1, 2; Gulf Power Company—Crist Unit 7; JEA Northside—SJRPP Unit 3; PEF—Anclote Power Plant Units 1, 2; and PEF—Crystal River Power Plant Units 1, 2. As discussed in the July 1, 2007, memorandum from William L. Wehrum, Acting Assistant Administrator for Air and Radiation, to EPA Regional Administrators, EPA Regions 1–10, entitled *Guidance for Setting Reasonable Progress Goals Under the Regional Haze Program* (''EPA's Reasonable Progress Guidance''), EPA believes that it is reasonable to conclude that any control requirements imposed in the BART determination also satisfy the reasonable progress-related requirements for source review in the first implementation period since the BART analysis is based, in part, on an assessment of many of the same factors that must be addressed in making source-specific reasonable progress determinations. Therefore, Florida conducted individual reasonable progress control reviews only on the remaining eight EGUs at five facilities: GRU Deerhaven (Unit 5); Lakeland Electric—C.D. McIntosh (Unit 6); JEA—Northside/SJRPP (Units 16, 17); PEF—Crystal River (Units 3, 4); and SEC (Units 1, 2).

The CAA and RHR require that states consider the following factors and demonstrate how these factors were taken into consideration in making source-specific reasonable progress determinations: Costs of compliance; time necessary for compliance; energy and non-air quality environmental impacts of compliance; and remaining useful life of any potentially-affected sources. CAA section 169A(g)(1); 40 CFR 51.308(d)(1)(i). The results of FDEP's reasonable progress analyses for the eight remaining EGUs are summarized below by facility, followed by EPA's assessment.

1. GRU Deerhaven

GRU's Deerhaven Emissions Unit 5 is a nominal 251 megawatt (MW) coal-fired EGU. SO_2 emissions are currently controlled with a dry flue gas desulfurization (FGD) system designed to achieve a target outlet SO_2 emissions rate of 0.12 pound per million British Thermal Units (lb/MMBtu). This dry FGD came on-line in 2009, providing reductions in SO_2. Prior to the installation and operation of the FGD, FDEP identified this unit for a reasonable progress analysis because its reasonable progress source selection metric of emissions (Q) divided by distance (d) from the Class I area or ''Q/d'' (i.e., 2002 SO_2 emissions in tons/distance in kilometers (km)) [6] ratio in 2002 was greater than 50 (6,969 tons/112.2 km = 62.12), the Q/d value used by Florida to determine which sources would be subject to a reasonable progress analysis. Due to the addition of the dry FGD, FDEP has issued a federally enforceable permit condition that limits SO_2 emissions to 5,500 tons per year, resulting in a maximum Q/d value of 49.0. Thus, no further analysis of this source is required for this implementation period.

2. PEF—Crystal River

Units 3 and 4 at PEF's Crystal River plant are fossil fuel-fired EGUs, each rated at 760 MW. SO_2 emissions are controlled with wet FGD systems that came on line in 2009 (Unit 4) and 2010 (Unit 3) and are designed to reduce emissions by 97 percent. Wet FGD systems are considered by FDEP to be the top-level SO_2 emissions control system for coal-fired boilers such as Units 3 and 4, and the SO_2 emissions from these units are limited to 0.27 lb/MMBtu, based on a 30-day rolling average, through a federally enforceable permit. The source considered the potential for additional SO_2 reductions through the use of lower sulfur western coal but found that it would not be cost-effective, as discussed below.

Cost of Compliance: The source is already incurring the cost of the new wet FGD systems as they were installed in 2009 and 2010, before the reasonable progress evaluation. While lower sulfur coal is potentially available from the Powder River Basin (PRB), PRB coal is a sub-bituminous coal with unique combustion characteristics that would require additional operational modifications to ensure continued safe and reliable unit performance. Moreover, the transportation of this coal from Wyoming to Florida would be cost prohibitive and produce secondary environmental impacts.

Time Necessary for Compliance: Wet FGD is already installed and operating; therefore, no additional time for compliance is necessary. Installing additional add-on controls for PRB firing would take, at a minimum, several years due to PEF's need to continue operating the units as base-load to supply reliable electric power to its customers.

Energy and Non-Air Quality Environmental Impacts of Compliance: Since Florida considers wet FGD as the top-level control and it is already installed, no additional energy or non-air quality environmental impacts would occur. The impacts from the use of lower sulfur PRB coal could potentially include: increased water usage, additional solid waste, secondary emissions caused by fuel transportation, and additional energy usage for control.

Remaining Useful Life: The source anticipates that Emissions Units 3 and 4 will continue to operate for another 28 years.

Conclusion: After considering the four reasonable progress factors for PEF-Crystal River, FDEP determined that the existing wet FGD systems at the current, permitted emissions limits satisfy the reasonable progress requirements for this implementation period.

3. SECI

SECI Units 1 and 2 are solid fuel, dry-bottom, wall-fired units with a maximum heat input of 7,172 million British Thermal Units per hour (MMBtu/hr) generating 736 MW each. Units 1 and 2 are currently authorized to burn coal as the primary fuel but are also authorized to burn a blend of coal and petroleum coke with up to a maximum of 30 percent by weight petroleum coke. The maximum sulfur content of the petroleum coke may not exceed 7.0 percent by weight on a dry basis (2.3 times the coal sulfur content of 3.0 percent by weight). Units 1 and 2 are each equipped with a wet FGD to control SO_2 emissions.

Cost of Compliance: FDEP has determined that wet FGD technology provides the highest SO_2 removal efficiencies for coal-fired boilers. As such, no lower level control option was reviewed. However, certain upgrades are available to improve the FGD systems to achieve 95 percent removal efficiency, and while not quantified, the company has agreed to incur the costs to achieve this removal efficiency. In addition to the FGD controls for SO_2, the facility is equipped with electrostatic precipitators (ESPs) for control of PM; low NO_X burners and Selective Catalytic Reduction (SCR) for NO_X control; and an alkali injection system to control emissions of sulfuric acid mist. The wet FGD controls were installed in 1984 and

[6] Florida's development and use of the Q/d metric is discussed in EPA's May 25, 2012, proposal at 77 FR 31251.

upgraded in 2010 to comply with CAIR and other air regulatory programs (e.g., the Utility Mercury Air Toxics Standards (MATS) rule). Following these upgrades, the allowable SO_2 emissions rate for Units 1 and 2 was reduced from 1.2 to 0.67 lb/MMBtu on a 30-day rolling average basis. The FGD control systems on Units 1 and 2 currently achieve approximately 92 percent SO_2 removal, and SECI proposes to make additional changes to Units 1 and 2 to achieve a minimum SO_2 removal efficiency of 95 percent or, alternatively, to achieve an equivalent SO_2 emissions rate of no more than 0.25 lb/MMBtu on a 30-day rolling average basis for both units.

SECI is presently evaluating available options to achieve the proposed 95 percent SO_2 removal efficiency or the emissions limit identified above including, but not limited to, further modifications to the internal components of the FGD, increasing limestone recirculation rates, and increased used of dibasic acid. SECI will complete its evaluation and provide FDEP with the details of the selected option by March 1, 2013. The amount of time required to implement the selected option and achieve the proposed SO_2 emissions limits will depend on the option's design and whether construction is required. However, within one to three years following option selection, but no later than March 1, 2016, SECI will achieve either the proposed SO_2 emissions limit or the removal efficiency requirements. The applicable limits and final compliance date are included in a federally enforceable permit.

Time Necessary for Compliance: Compliance with the 95 percent SO_2 removal efficiency or the alternate emissions limit of 0.25 lb/MMBtu SO_2 will be achieved by March 1, 2016.

Energy and Non-Air Quality Environmental Impacts of Compliance: There are no additional energy or non-air quality environmental impacts since the FGD system is already installed and operating.

Remaining Useful Life: These units are anticipated to operate indefinitely.

Conclusion: After considering the four reasonable progress factors for SECI Units 1 and 2, FDEP has determined that the existing wet FGD SO_2 control systems with upgrades to achieve a minimum SO_2 removal efficiency of 95 percent or, alternatively, an equivalent SO_2 emissions rate of no more than 0.25 lb/MMBtu on a 30-day rolling average basis for both units are adequate to satisfy the reasonable progress requirements for this implementation period. In addition, the State has removed the option to burn petroleum coke from the facility's federally enforceable permit.

4. Lakeland Electric C.D. McIntosh

Lakeland Electric C.D. McIntosh's Unit 6 is a nominal 364 MW fossil fuel-fired EGU that fires coal and up to 20 percent petroleum coke, low sulfur fuel oil (<0.5 percent sulfur by weight), high sulfur fuel oil (>0.5 percent sulfur by weight), and natural gas or propane. Unit 6 is subject to a federally enforceable permit condition that limits SO_2 emissions to: 0.80 lb/MMBtu for liquid fossil-fuel firing (3-hour average, 40 CFR 60 subpart D); 1.20 lb/MMBtu for solid fossil-fuel firing (3-hour average, 40 CFR 60 subpart D); 0.718 lb/MMBtu for blends of petroleum coke and any other fuels (30-day rolling average); and whenever coal or blends of coal and petroleum coke or refuse are burned, SO_2 gases discharged to the atmosphere from the boiler shall not exceed 10 percent of the potential combustion concentration (90 percent reduction), or 35 percent of the potential combustion concentration (65 percent reduction), when emissions are less than 0.75 lb/MMBtu heat input (30-day rolling average). For the most recent five-year period, more than 95 percent of the total heat content is due to bituminous coal firing.

Unit 6 is currently equipped with a wet limestone FGD system to control SO_2 emissions and is subject to New Source Performance Standard (NSPS) subpart D, which has no minimum SO_2 percent reduction requirements. However, the current title V permit requires a 65 percent reduction in SO_2 when the emissions are less than 0.75 lb/MMBtu (30-day rolling average) and a 90 percent reduction when emissions are greater than or equal to 0.75 lb/MMBtu (30-day rolling average). Based on the actual SO_2 emissions reported in 2002, the FGD system reduces SO_2 emissions by 81 percent.

Cost of Compliance: The source considered several changes and upgrades to the wet FGD system to further reduce SO_2 emissions, including lower sulfur fuel, wet FGD modifications, and complete replacement of the FGD system. Among the authorized fuels for Unit 6, petroleum coke has the highest sulfur content (average of 3.9 percent sulfur by weight), and bituminous coal (average of 1.8 percent sulfur by weight) is the fuel with next highest sulfur content. Lakeland Electric is authorized to burn up to 20 percent petroleum coke by weight with bituminous coal and, as a result, the average sulfur content of the combined fuel (coal and petroleum coke) can be as high as 2.2 percent (80 percent coal with 1.8 percent sulfur and 20 percent petroleum coke with 3.9 percent sulfur) due to the higher sulfur content of petroleum coke. Although coal is the most used fuel for Unit 6, petroleum coke can contribute significantly to the total SO_2 emissions from the unit, and Lakeland Electric believes that curtailing petroleum coke firing is the most cost-effective solution to reduce the sulfur content of fuel burned in Unit 6. The State estimated that 17 pounds of SO_2 would be reduced for every ton of coal burned when compared to the combined use of coal and petroleum coke (difference between 2.2 percent sulfur and 1.8 percent sulfur in one ton of fuel). Lakeland Electric did not provide costs for eliminating petroleum coke as an authorized fuel, and FDEP assumed that these costs would be minimal.

The existing FGD system is a 30-year old Babcock & Wilcox design that is not designed to achieve 95 to 98 percent SO_2 removal without significant major upgrades in the existing equipment. Based on a preliminary assessment, the removal efficiency of the FGD system could be increased to a maximum of 95 percent with equipment improvements to the existing wet FGD absorbers, slurry systems, additive systems, reheat systems, and other auxiliary equipment that are estimated to cost $25 million. Assuming that the existing wet FGD provides 81 percent control, an additional 14 percent control would reduce SO_2 emissions by another 5,153 tons based on 2002 SO_2 emissions from this unit of 6,994 tons. This would result in a cost-effectiveness of approximately $4,852 per ton of SO_2 reduction. FDEP does not consider this a reasonable cost-effectiveness value and therefore determined that upgrading the existing FGD system is not necessary for achieving the RPGs for this implementation period.

An additional/replacement wet FGD system designed to achieve 98 percent SO_2 removal would achieve the highest level of SO_2 control while Unit 6 remains operating and available to provide electric power to its customers. In estimating the cost of a replacement wet FGD system, FDEP used information developed for the Transport Rule. The annualized cost was based on the amount of historical operation in the baseline year of 2002 and is estimated to be approximately $36.3 million. FDEP estimated a cost-effectiveness of approximately $5,804 per ton of SO_2 removed using a target emissions rate of 0.063 lbs/MMBtu (equivalent to 98 percent SO_2 removal based on 2002 operations). FDEP did not consider this

a reasonable cost-effectiveness value and therefore determined that an additional/replacement FGD is not necessary for achieving the RPGs for this implementation period.

Time Necessary for Compliance: The wet FGD system is already operating for this unit. The options for upgrading or replacing the existing wet FGD would each take a minimum of three years to complete whereas the option of reducing the potential fuel sulfur content could be completed immediately.

Energy and Non-Air Quality Environmental Impacts of Compliance: The energy and non-air quality environmental impacts associated with an additional/replacement wet FGD system include additional limestone usage, disposal of wet FGD byproducts, increased water use, and additional energy. FDEP estimated that wet FGD requires approximately three percent of the unit's energy output for auxiliary power and backpressure (approximately 1.09 MW per ton of SO_2 removed). For each ton of SO_2 removed, approximately 2.34 tons of wet FGD byproducts are produced, and for the estimated SO_2 removal increase based on 2002 emissions, an additional 6,572 tons of limestone would be required and 14,646 tons of byproducts generated. Approximately 312,953 gallons of additional process water would be required based on the SO_2 removal increase from 2002 emissions and an estimated water usage increase of approximately 50 gallons per ton of SO_2 removed.

Remaining Useful Life: These units are anticipated to operate indefinitely.

Conclusion: After considering the four reasonable progress factors for Lakeland Electric's McIntosh Unit 6, FDEP has determined that the existing wet FGD system at the current, permitted emissions limits with the elimination of petroleum coke as an authorized fuel meets the reasonable progress requirements for this implementation period.

5. JEA SJRPP

JEA's SJRPP Emissions Units 16 and 17 (commonly referred to as Boilers 1 and 2) are fossil fuel-fired EGUs rated at 679 MW each with a maximum heat input rate of 6,144 MMBtu/hr per boiler. The boilers are fired with pulverized coal, a coal blend with a maximum of 30 percent petroleum coke by weight, natural gas, new No. 2 distillate fuel oil (startup and low-load operation), and ''on specification'' used oil. The maximum coal or petroleum coke-coal blend sulfur content cannot exceed 4.0 percent by weight, and the maximum sulfur content of the No. 2 fuel oil is 0.76 percent by weight. Federally-enforceable permit conditions limit SO_2 emissions when burning coal to 1.2 lb/MMBtu on a maximum two-hour average and 0.76 lb/MMBtu on a 30-day rolling average (90 percent reduction of the potential combustion concentration).

Units 16 and 17 are equipped with wet FGD systems capable of up to 90 percent reduction in SO_2 emissions with a maximum SO_2 emissions rate of 0.76 lb/MMBtu (30-day average) using the worst-case fuel.

Cost of Compliance: The source considered several changes or upgrades to the wet FGD system to further reduce SO_2 emissions including lower sulfur fuel, wet FGD modifications, and complete replacement of the wet FGD system. Increasing the removal efficiency of the existing wet FGD system is possible with equipment improvements to the wet FGD absorbers, slurry systems, additive systems, reheat systems, and other auxiliary equipment. FDEP estimated the capital costs for the potential improvements to be in the range of $10 million to $30 million per boiler. In conjunction with the equipment improvements, operating costs for increased SO_2 removal would include fixed and variable operating costs from approximately $3 million per year per boiler to over $4.5 million per year per boiler. Depending upon the options selected, up to an additional five percent SO_2 removal is possible. An engineering study has commenced that will include an evaluation of the sulfur content for the various range of fuels authorized for SJRPP and a refinement of these very preliminary cost estimates. Since the unit is presently 90 percent controlled, FDEP has determined not to require these improvements for reasonable progress during this first implementation period.

Achieving greater SO_2 reductions than 90 percent would require either add-on SO_2 controls after the existing equipment or a replacement of the current wet FGD system with systems designed to achieve 95 to 98 percent or greater SO_2 removal. The existing wet FGD systems are not designed to achieve 95 to 98 percent SO_2 removal without significant major upgrades in the existing equipment. An additional/replacement FGD system designed to achieve a total removal of 98 percent SO_2 removal would be required to achieve the highest level of SO_2 control.

Units 16 and 17 are identically designed units in close proximity that have a similar influence on visibility in Class I areas. FDEP calculated an estimated annualized cost for an additional/replacement wet FGD system of $59.7 million based on an emissions rate of 0.053 lb/MMBtu, equivalent to 98 percent SO_2 removal, based on 2002 operations. FDEP estimated a cost-effectiveness of $6,383 per ton of SO_2 removed using a reduction from the 2002 baseline year and an emissions rate of 0.053 lb/MMBtu. Cost-effectiveness using the emissions from the latest full year, 2011, was also calculated to contrast the cost-effectiveness from the 2002 baseline year and was estimated at $11,921 per ton of SO_2 removed. FDEP does not consider these reasonable cost-effectiveness values for Units 16 and 17, and therefore determined that an additional/replacement wet FGD system is not necessary for meeting the reasonable progress requirements for this implementation period. Furthermore, it may not be possible to install add-on SO_2 equipment given spatial constraints at the site.

Time Necessary for Compliance: The existing wet FGD systems are already operating for these boilers. The option for replacing the existing FGD systems would take a minimum of three years to complete whereas the option of making improvements to the existing FGD systems, including reducing the potential fuel sulfur content, could be implemented in a shorter time frame.

Energy and Non-Air Quality Environmental Impacts of Compliance: The energy and non-air quality impacts associated with an additional/replacement wet FGD system include additional limestone usage, disposal of wet FGD byproducts, increased water usage, and additional energy. FDEP estimates that a wet FGD requires about three percent of the unit's energy output for auxiliary power and backpressure (approximately 1.09 megawatt-hour (MWh) per ton of SO_2 removed), requiring 10,189 MWh of additional energy to achieve 98 percent SO_2 removal from the 2002 baseline emissions. Based on 2002 emissions, an additional 9,815 tons of limestone would be required, 21,874 tons of byproducts would be generated, and approximately 467,389 gallons of additional process water would be required to achieve 98 percent removal.

Remaining Useful Life: These units are anticipated to operate for at least another 20 years.

Conclusion: After considering the four reasonable progress factors for JEA's SJRPP Emissions Units 16 and 17, FDEP has determined that the existing FGD control systems at the current, permitted emissions limits satisfy the reasonable progress requirement for the implementation period.

6. Enforceability

FDEP included the final determinations and, as appropriate, the permit modifications to address reasonable progress as Exhibit 2 of the September 17, 2012, amendment. FDEP added the required operational restrictions limiting emissions, along with the associated monitoring and recordkeeping provisions, to each affected facility's federally enforceable permits.

7. EPA Assessment

As noted in EPA's Reasonable Progress Guidance, states have wide latitude to determine appropriate control requirements for ensuring reasonable progress. States must consider the four statutory factors (identified in section III.A. of this action), at a minimum, in determining reasonable progress, but have flexibility in how to take these factors into consideration. EPA proposes to find that Florida fully evaluated all control technologies available at the time of its analysis and applicable to: GRU Deerhaven Unit 5; PEF—Crystal River Units 3 and 4; SECI Units 1 and 2; Lakeland Electric—C.D. McIntosh Boiler Unit 6; and JEA SJRPP Units 16 and 17. EPA also proposes to find that Florida consistently applied its criteria for reasonable compliance costs and appropriately and adequately considered the statutory factors in developing its reasonable progress determinations. Accordingly, EPA is proposing to approve the reasonable progress determinations for these eight units for the first implementation period.

B. BART Analyses

As discussed in section II and summarized in Table 2 of this action, the State's September 17, 2012, amendment identified 20 BART-eligible units at 11 facilities with EGUs that were subject to CAIR and found subject to BART that were included in the State's July 31, 2012, draft SIP amendment.[7] Under the *Guidelines for BART Determinations Under the Regional Haze Rule* contained in Appendix Y to 40 CFR Part 51 (BART Guidelines), a state may exempt sources from BART if they do not cause or contribute to visibility impairment in any Class I area. FDEP used a contribution threshold of 0.5 deciview to determine which sources were subject to BART in accordance with the BART Guidelines following a review by Florida that this threshold was appropriate for sources in the State. EPA proposed approval of the use of this contribution threshold in its May 25, 2012, proposed action on prior revisions to Florida's regional haze SIP and approved several BART determinations based on this threshold in its November 29, 2012, action (77 FR 71111).

Using a 0.5 deciview threshold, Florida determined that the City of Tallahassee Arvah B. Hopkins Unit 1 was not subject to BART. In addition, two of the remaining BART-eligible sources—Reliant Energy—Indian River Units 2 and 3 and PEF—Anclote Units 1 and 2—made changes to their operations in order to ensure that allowable emissions would not cause visibility impacts to exceed the 0.5 deciview threshold. All of these operational changes at Indian River Units 2 and 3 and Anclote Units 1 and 2 have been incorporated into their respective permits and are federally enforceable. EPA proposes to agree with Florida's findings that these five units are not subject to further BART review.

Florida determined that the remaining 15 BART-eligible units at eight facilities were subject to BART. In accordance with the BART Guidelines, to determine the level of control that represents BART for each source, the State first reviewed existing controls on these units to assess whether these constituted the best controls currently available, then identified what other technically feasible controls are available, and finally, evaluated the technically feasible controls using the five BART statutory factors (costs of compliance; energy and non-air quality environmental impacts of compliance; any existing emissions control technology in use at the source; the remaining useful life of the source; and the degree of improvement in visibility which may reasonably be anticipated to result from the use of such technology). CAA section 169A(g)(2). The State's evaluations and conclusions are summarized below by facility, followed by EPA's assessment.

1. Gulf Power Crist

Gulf Power's Crist Electric Generating Plant is located in Escambia County, Florida, and consists of four active fossil fuel fired EGUs (Units 4, 5, 6, and 7), two of which are BART-eligible units (Units 6 and 7). The following Class I area is located within 300 km of the Gulf Power Crist facility: Breton National Wilderness Area (NWA)—250 km.[8] Pulverized coal is the primary fuel for Units 6 and 7, and natural gas, fuel oil, and on-specification used oil are used as supplemental fuels in all four of the units. The facility operates a wet FGD system to control SO_2 emissions from Units 4–7 by 95 percent; low NO_X burners (LNB) and SCR (designed to achieve no less than an 85 percent reduction) to control NO_X emissions from Units 6 and 7; and cold side ESPs to control PM emissions from Units 6 and 7. Federally enforceable title V permit emission limits for NO_X, SO_2, and PM are currently established. FDEP determined that existing controls at Units 6 and 7 represent the most stringent controls available, thus satisfying the BART requirements for SO_2, NO_X, and PM, as discussed below.

SO_2 BART: The facility utilizes a wet FGD system that began operating in 2009 to control SO_2 emissions from Units 4–7. These units share a common stack under normal conditions with the wet FGD system in operation. Since the wet FGD was installed on a common stack for Units 4–7, SO_2 emissions reductions occur from the control of the non-BART Units 4 and 5 as well as the BART Units 6 and 7. The system is designed to reduce SO_2 emissions by 95 percent and consists of a single scrubber reactor vessel and supporting subsystems for transporting and processing flue gas exhaust, limestone, gypsum or other solids, and water. FDEP determined that the wet FGD systems represent the most stringent controls available and the current, permitted emissions limits contained in FDEP's title V operating permit No. 0330045–031–AV are SO_2 BART for Units 6 and 7, and that no additional control measures are necessary.

NO_X BART: NO_X emissions from Units 6 and 7 are controlled by LNB and by SCRs designed to achieve no less than an 85 percent reduction in NO_X emissions. The SCR came on line in 2005 for Unit 7 and in 2012 for Unit 6. The current federally enforceable permit limits NO_X emissions from the combined operation of Units 4–7 to 0.2 lb/MMBtu heat input based on a 30-day rolling average except for periods when Unit 7 is shut down. FDEP determined that the technology applied at this facility is the top-level NO_X control for Units 6 and 7 and that the SCRs at the current, permitted emissions limits are NO_X BART for these EGUs.

PM BART: PM emissions from Units 6 and 7 are controlled by cold side ESPs

[7] On November 29, 2012, EPA finalized full approval of the BART determinations addressed in the April 13, 2012, draft regional haze SIP amendment.

[8] Florida adopted the Visibility Improvement State and Tribal Association of the Southeast (VISTAS) modeling protocol that limits the CALPUFF modeling domain to a 300 km radius around the subject source. *See* 77 FR 31240.

with a federally enforceable PM emissions limit of 0.1 lb/MMBtu heat input. FDEP determined that the technology applied at this facility is the top-level PM control and that the current, permitted emissions limits for Units 6 and 7 are PM BART for these EGUs.

Summary of FDEP's BART Determination for Gulf Power Crist: FDEP determined that the current, permitted emissions limits satisfy BART for SO_2, NO_X, and PM. No new limits or changes to existing limits were adopted for BART. The existing operating conditions for units 4–7 are incorporated in the FDEP title V operating permit No. 0330045–031–AV.

2. FPL Martin

The Martin Power Plant is located in Martin County, Florida. The following Class I areas are located within 300 km of the Martin Plant: Chassahowitzka NWA–145 km and Everglades National Park (NP)–267 km. The facility consists of two oil and natural gas-fired conventional fossil fuel steam EGUs (Units 1 and 2), two oil and natural gas-fired combined cycle units (Units 3 and 4), four oil and natural gas-fired combined-cycle combustion turbines (Unit 8), and associated support equipment. Only Units 1 and 2 are subject to BART. Units 1 and 2 each have a maximum capacity of 863 MW and are equipped with LNB to reduce NO_X emissions and multi-cyclones with fly ash reinjection to control PM emissions. Separate from the BART determination, FPL is currently planning to install ESPs for the purpose of controlling PM emissions from Units 1 and 2. The projected ESP installation date is first quarter of 2014 for Unit 1 and the fourth quarter of 2014 for Unit 2. The ESPs are expected to reduce PM emissions compared to the currently permitted rates. FDEP has determined that existing controls at the current, permitted emissions limits for the affected pollutants SO_2, NO_X, and PM are BART for the Martin Plant, as discussed below.

SO_2 BART: The options evaluated for SO_2 control included use of low sulfur fuel (0.3 percent and 0.7 percent) and FGD. These units are currently subject to the NSPS subpart Da limit of 0.8 lb/MMBtu when firing fuel oil. This plant fires blends of natural gas and/or fuel oil as needed to comply with this SO_2 limit. FDEP determined that the current operating practice of using 0.7 percent sulfur fuel oil burned alone, or co-fired with the requisite amount of natural gas, in order to comply with the NSPS limit of 0.8 lb/MMBtu, is SO_2 BART for Units 1 and 2.

FGD: The BART analysis submitted by FPL discussed various post-combustion control technologies that rely on chemical reactions within the control device to reduce the concentration of SO_2 in the flue gas. These included wet FGD and dry FGD. FDEP determined that wet and dry FGD systems, typically used for coal-fired boilers, are not a technically viable option for oil/gas-fired utility boilers such as Units 1 and 2.

Lower sulfur oil: CALPUFF air quality modeling indicates that the baseline 98th percentile visibility impact using the current permit limit of 0.8 lb/MMBtu (assured by firing fuel oil containing 0.7 percent sulfur) is 2.3 deciviews at the nearest Class I area (Chassahowitzka NWA) and that the total modeled 98th percentile visibility improvement using 0.3 percent sulfur fuel would be 1.07 deciviews, for a modeled improvement of 1.23 deciviews.[9] The resulting average visibility improvement cost-effectiveness is approximately $155 million per deciview. In addition to the BART analysis submitted by FPL, FDEP calculated that the cost-effectiveness of reducing the sulfur content of the fuel oil from 0.7 percent to 0.3 percent is approximately $7,348 per ton based on FPL-supplied data on fuel prices, energy content, and density. FDEP therefore concluded that switching to 0.3 percent sulfur fuel is not SO_2 BART as it is not cost-effective.

NO_X BART: Units 1 and 2 are currently equipped with flue gas recirculation (FGR), overfire air systems, staged combustion, and LNB. SCR was the only available additional control option identified in FPL's BART analysis. FDEP concluded that SCR is not cost-effective for Units 1 and 2 and that the existing NO_X reduction practices in use (FGR, overfire air systems, staged combustion, LNB, and good combustion practices) are NO_X BART for Units 1 and 2 for the reasons discussed below.

SCR: FPL performed a BART cost-effectiveness calculation using a control efficiency of 90 percent and direct and indirect capital costs and operation and maintenance costs for SCR from a study conducted in 2006 for Martin Units 1 and 2. FPL concluded that SCR would require a direct capital investment of approximately $100 million per unit with a cost-effectiveness of $5,323 per ton based on direct and indirect capital costs as well as operation and maintenance costs totaling approximately $31 million. CALPUFF modeling results indicate that only six to seven percent of the total visibility impact at the nearest Class I area is attributable to the NO_X emissions from these units and that the visibility improvement from SCR would be approximately 0.15 deciview, resulting in a visibility cost-effectiveness of approximately $203 million per deciview.

PM BART: FPL evaluated ESPs as possible PM BART for Units 1 and 2. ESPs are common particulate controls on utility boilers with a control effectiveness of 99 percent. FPL concluded that control of PM emissions from Units 1 and 2 will not provide a meaningful reduction in visibility impacts. FDEP concluded that the addition of ESPs to these units is not cost-effective and therefore not PM BART for these units as discussed below. However, FPL plans to install ESPs on Units 1 and 2 in 2014 for the purpose of controlling PM.

ESP: The capital cost for ESP on each BART-subject unit is approximately $55.6 million. Records of actual reported annual emissions reveal that PM emissions in 2010 were 311 tons from Unit 1 and 247 tons from Unit 2. Assuming an ESP control efficiency of 98 percent, these emissions could be reduced by a total of 547 tons annually. Cost-effectiveness is therefore $9,595 per ton based on estimated annualized capital costs of approximately $5.3 million per year and assuming no additional maintenance and operating costs. CALPUFF baseline visibility modeling showed that only four to six percent of the total visibility degradation at the nearest Class I area attributable to Units 1 and 2 at Martin is due to PM emissions, translating into less than a 0.1 deciview impact at any Class I area. FPL therefore concluded that control of PM emissions from Units 1 and 2 will not provide a meaningful reduction in visibility impacts. FDEP concluded that the addition of ESPs to these units is not cost-effective and therefore not PM BART.

Summary of FDEP's BART Determination for the Martin Plant: FDEP determined that existing controls already in place at the current, permitted emissions limits for the affected pollutants SO_2, NO_X, and PM are BART for the Martin Plant. Units 1 and 2 meet BART requirements by continuing to comply with the existing operational and emissions limiting standards for each pollutant as summarized below.

[9] EPA assessed whether the visibility impacts of FPL Martin on other nearby Class I areas would affect any of FDEP's BART determinations for this facility. The FPL Martin Plant has comparable but lesser impacts on a second Class I area (Everglades NP), and EPA concluded that consideration of these impacts would not change the determinations.

SO_2: 0.80 lb/MMBtu when firing liquid fossil fuel, met by firing natural gas, co-firing natural gas with fuel oil containing less than one percent sulfur, or firing fuel oil alone containing less than 0.7 percent sulfur.

NO_X: 0.2 lb/MMBtu when firing natural gas, 0.3 lb/MMBtu when firing fuel oil, pro-rated based on heat input when co-firing gas and oil. The limits are met through the use of FGR, overfire air systems, staged combustion, and LNB.

PM: 0.1 lb/MMBtu when firing fuel oil. The limit is met by firing natural gas, co-firing natural gas with fuel oil containing less than one percent sulfur, or firing fuel oil alone containing less than 0.7 percent sulfur, and through the use of multi-cyclones (mechanical dust collectors) and fly ash reinjection.

3. FPL Manatee

FPL's Manatee Plant is located in Manatee County, Florida. The following Class I areas are located within 300 km of the Manatee Plant: Chassahowitzka NWA–116 km and Everglades NP–212 km. This facility consists of two oil and natural gas-fired 800 MW (900 MW gross capacity) conventional steam EGUs (Units 1 and 2), a ''4 on 1'' gas-fired combined cycle unit (Unit 3A–3D), and miscellaneous insignificant emissions units. Only Units 1 and 2 are BART-eligible. Each of these two units is equipped with ESPs for PM and a FGR system along with reburn and staged combustion for NO_X. In addition, FPL recently submitted a permit application to FDEP seeking an increase in the natural gas capacity of these units from 5,670 MMBtu/hr to 8,650 MMBtu/hr to displace the use of more residual fuel oil which will raise the allowable natural gas capacity in the permit to equal the oil-firing permit capacity. The proposed increased utilization of natural gas is also expected to reduce SO_2, PM, and NO_X emissions from Units 1 and 2. In addition, FDEP has determined that SO_2 emissions and visibility impacts can be reduced by switching to low sulfur fuel oil containing a maximum of 0.7 percent sulfur content or to a mixture of low sulfur fuel oil containing a maximum of 1.0 percent sulfur and natural gas in a ratio not to exceed the SO_2 emissions limit of 0.80 lb/MMBtu heat input. FDEP has also determined that the controls already in place, or soon to be in place, at the current, permitted emissions limits for NO_X and PM are BART for Units 1 and 2, as discussed below.

SO_2 BART: FPL evaluated the use of low sulfur fuel (0.3 percent and 0.7 percent sulfur content) and FGD, for controlling SO_2 emissions from Units 1 and 2. These units currently burn natural gas, distillate, or residual fuel oil and are subject to the NSPS subpart D limit of 0.80 lb/MMBtu when firing fuel oil. The facility's title V permit limits the sulfur content of fuel oils burned to a maximum of 1.0 percent by weight, as received at the facility, and the blending of natural gas is not allowed to demonstrate compliance with the SO_2 limit. FDEP determined that the switch from the current 1.0 percent sulfur fuel to 0.7 percent sulfur fuel oil burned alone, or co-fired with the requisite amount of natural gas, in order to comply with the NSPS limit of 0.80 lb/MMBtu, is SO_2 BART for Units 1 and 2, as discussed below.

FGD: The BART analysis submitted by FPL discussed various post-combustion control technologies that rely on chemical reactions within the control device to reduce the concentration of SO_2 in the flue gas. These included a wet FGD and dry FGD. FPL provided generic cost information but cautioned that it was for illustrative purposes and that detailed wet FGD cost estimates had not been developed. These generic cost estimates are believed to underestimate the true cost because they do not consider additional retrofit costs that would be expected for adding FGD systems on Units 1 and 2 at Manatee. In addition, FPL believes that it may not technically feasible to construct wet FGD without major demolition efforts that would affect the continued operation of these units. FDEP agrees with FPL that wet or dry FGD systems are typically used for coal-fired boilers and not for oil/gas-fired boilers. This fact, coupled with high capital costs (ranging between $40 and $100 million), led FDEP to the conclusion that FGD would be cost prohibitive. FDEP therefore reject this option in the BART analysis.

Low Sulfur Fuel: The refined oil products that are readily available to FPL's Manatee Plant include 0.3 percent and 0.7 percent sulfur grades. The total annual cost of switching Units 1 and 2 from the fuel currently used to 0.7 percent or 0.3 percent sulfur fuel oil would exceed $85 million and $240 million, respectively. However, switching from 1.0 percent to 0.7 percent or 0.3 percent sulfur fuel oil is a strategy to lower emissions of SO_2 with no added capital investment. FDEP calculated the cost-effectiveness of switching to 0.7 percent and 0.3 percent sulfur fuel oil from the current baseline of 1.0 percent oil to be $5,468/ton and $6,542/ton, respectively, based on the information provided by FPL with an estimated cost-effectiveness of $7,348/ton in lowering the sulfur level in the fuel oil from 0.7 percent to 0.3 percent.

CALPUFF air quality modeling indicates that the baseline visibility impact using the current permit limit (firing fuel oil containing 1.0 percent sulfur) from Units 1 and 2 at Manatee is 4.07 deciviews at the nearest Class I area (Chassahowitzka NWA) and that the total improvement in visibility using 0.7 percent and 0.3 percent sulfur fuel would be 0.87 deciview and 2.38 deciviews, respectively.[10] The resulting average visibility improvement cost-effectiveness is calculated at approximately $100 million per deciview burning 0.7 percent sulfur fuel and $102 million per deciview burning 0.3 percent sulfur fuel. Because the overall costs of improvement are high for switching to the 0.3 and 0.7 percent sulfur fuels, FDEP concluded that these options are not cost-effective. However, FDEP determined that equivalent visibility improvements to those that could be achieved by switching to 0.7 percent fuel oil could be achieved by removing the current prohibition on blending and co-firing 1.0 percent oil with natural gas and by lowering the allowable emissions limit to 0.8 lb/MMBtu (12-month rolling average), consistent with the NSPS for this source category. FDEP has determined that these changes constitute BART for SO_2 for Units 1 and 2.

NO_X BART: Units 1 and 2 are currently equipped with FGR, overfire air systems, staged combustion, LNB, and reburn. SCR was the only available additional control option identified in FPL's analysis. FPL calculated cost-effectiveness using direct and indirect capital costs and the operation and maintenance costs for SCR from a study conducted in 2006 for Units 1 and 2 and a control efficiency of 90 percent (reducing NO_X emissions by 8,229 tons per year). FPL calculated that the annualized cost to purchase and operate SCR on both units would be approximately $31 million with a cost-effectiveness of $3,776/ton of NO_X reduced. Based on the CALPUFF modeling results, NO_X emissions from Units 1 and 2 contribute only six to 17 percent of the total visibility impact on the nearest Class I area. The resulting visibility cost-effectiveness is approximately $66 million per deciview using a capital expenditure of approximately $100 million per unit

[10] EPA assessed whether the visibility impacts of FPL Manatee on other nearby Class I areas would affect any of FDEP's BART determinations for this facility. The FPL Manatee Plant has comparable but lesser impacts on a second Class I area (Everglades NP), and EPA concluded that consideration of these impacts would not change the determinations.

and annual operating costs of approximately $6 million. FDEP concluded that SCR was not cost-effective for Units 1 and 2 and that the existing controls of LNB, reburn, overfire air system, staged combustion, and FGR, along with good combustion practices, at the current, permitted emissions limits is NO_X BART for Units 1 and 2.

PM BART: FDEP has issued federally enforceable permits limiting PM emissions to 0.03 lb/MMBtu through the replacement of the existing cyclones with ESPs. The in-service dates for the ESPs for Units 1 and 2 are the third quarter of 2012 and fourth quarter of 2013, respectively. FDEP determined that ESPs are the most stringent controls available for PM emissions from these EGUs, and therefore constitute PM BART. As a result, FDEP did not consider additional retrofit technologies for PM BART.

Summary of FDEP's BART Determination for FPL's Manatee Plant: FDEP has determined that existing controls achieving the current, permitted emissions limits for NO_X and new ESPs soon to be in place for PM are BART for Units 1 and 2. FDEP has also determined that switching to a lower sulfur fuel oil as specified in the permit for Manatee is SO_2 BART. The following operational and emissions limits are BART for Units 1 and 2:

SO_2: Authorized fuels to be burned are low sulfur fuel oil containing a maximum of 0.7 percent sulfur content, by weight; natural gas; or a mixture of low sulfur fuel oil containing a maximum of 1.0 percent sulfur content (by weight) and natural gas in a ratio that shall not exceed the SO_2 emissions limit of 0.80 lb/MMBtu heat input (12-month rolling average).

NO_X: Emissions shall not exceed 0.3 lb/MMBtu as demonstrated by continuous emissions monitoring systems (CEMS). The limit is met through the use of FGR, overfire air systems, reburn, staged combustion, and LNB.

PM: Emissions shall not exceed 0.03 lb/MMBtu during normal operation. Compliance is demonstrated by stack testing.

4. Lakeland Electric C.D. McIntosh

The Lakeland Electric C.D. McIntosh Jr. Power Plant is located in Polk County, Florida, and has two BART-subject units. Unit 1 is a pre-NSPS boiler with a nominal rating of 985 MMBtu/hr fired by natural gas and fuel oil and no emissions controls. Emissions Unit 5 (commonly referred to as Unit 2 or Boiler 2) is a NSPS subpart D boiler with a nominal rating of 1,185 MMBtu/hr heat input equipped with FGR for NO_X control and no add-on PM or SO_2 controls.

The following Class I areas are located within 300 km of the C.D. McIntosh facility: Chassahowitzka NWA–91 km, Everglades NP–249 km, and Okefenokee NWA–277 kilometers. The visibility impact analysis was performed only for the Chassahowitzka NWA, the nearest Class I area and the only Class I area where the visibility impacts from this facility are predicted to be higher than 0.5 deciview.[11]

FDEP has determined that the use of 0.7 percent sulfur fuel oil and existing controls achieving the current, permitted emissions limits for the affected pollutants SO_2, NO_X, and PM are BART for Units 1 and 2, as discussed below.

SO_2 BART: FDEP evaluated the use of low sulfur fuel and FGD, as possible SO_2 controls. Unit 2 is currently limited to 0.7 percent fuel oil, and FDEP considered the option of utilizing this low sulfur fuel oil in Unit 1. Unit 1 is subject to Florida Rule 62–296.405(1)(c)1.a that limits SO_2 emissions to 2.75 lb/MMBtu when firing fuel oil. FDEP expects that the Utility MATS rule will result in this facility being operated as an oil-fired EGU subject to the provisions for limited-use liquid oil-fired facilities and that it will limit the unit's liquid fuel oil utilization to less than eight percent of its maximum or nameplate heat input starting in 2015. Lakeland Electric C.D. McIntosh has agreed to utilize the 0.7 percent low sulfur fuel oil in Unit 1, consistent with the fuel used in Unit 2. FDEP has determined that new shipments of fuel oil for Unit 1 will be limited to 0.7 percent sulfur content, the same as in Unit 2, and that this low sulfur fuel oil control option is SO_2 BART for these units for the reasons discussed below. A federally enforceable permit condition assures this operating condition.

FGD: The BART analysis submitted by FPL discussed various post-combustion control technologies that rely on chemical reactions within the control device to reduce the concentration of SO_2 in the flue gas. These included wet FGD and dry FGD. These control alternatives allow the use of high sulfur fuel oil with an assumed 98 percent removal efficiency for the maximum annual SO_2 emissions for Units 1 and 2 over the period 2001 through 2003. FDEP calculated an annualized cost of $36.2 million with an average cost-effectiveness of approximately $13,200 per ton of SO_2 removed for wet FGD on both Units 1 and 2. These estimated costs are not specific to the C.D. McIntosh Plant nor the layout of Units 1 and 2, and are believed to underestimate the true cost as they do not consider any site-specific additional retrofit costs. FPL believes that it may not be possible to install add-on SO_2 controls given the space constraints at the facility. For these reasons, FDEP concluded that FGD is not considered appropriate technology for oil/gas-fired boilers like C.D. McIntosh Units 1 and 2, and therefore rejected this option in the BART analysis.

Low Sulfur Fuel: Unit 1 currently burns natural gas and fuel oil and Unit 2 burns only fuel oil. The facility's federally enforceable title V permit limits the sulfur content of the fuel oil to a maximum of 2.5 percent for Unit 1 and 0.7 percent for Unit 2. FPL evaluated the use of 0.7 percent sulfur grade fuel oil in Unit 1, a control method that can result in lower emissions of SO_2 with no added capital investment and reduce emissions by more than 50 percent compared to the currently fired high sulfur fuel oil. FDEP determined that the resulting cost-effectiveness is $2,231/ton. CALPUFF air quality modeling indicates that the baseline 98th percentile visibility impact at the nearest Class I area (Chassahowitzka NWA) using the current permit limit of 2.75 lb/MMBtu for Unit 1 (based on firing fuel oil containing 2.5 percent sulfur) and Unit 2 (0.7 percent sulfur fuel oil) is 1.62 deciviews and that the total modeled 98th percentile visibility improvement using 0.7 percent sulfur fuel for Unit 1 would be 0.74 deciview.

NO_X BART: Unit 1 has no NO_X emissions controls other than best operating practices for good combustion. As mentioned previously, Unit 2 has FGR controls for NO_X and currently meets a federally enforceable NO_X permit limit of 0.2 lb/MMBtu with compliance demonstrated by CEMS. Lakeland Electric evaluated SCR as possible control for Units 1 and 2. FDEP concluded that NO_X BART is the current limit of 0.2 lb/MMBtu for Unit 2 and no add-on NO_X control for Unit 1.

SCR: FDEP estimates that a control efficiency of 80 percent can be achieved by SCR, on average, for these units. FDEP assumed that SCR is the top-level add-on NO_X control technology for Units 1 and 2 and calculated an annualized cost of $2.7 million with a cost-effectiveness of $5,241 per ton of

[11] EPA assessed whether the visibility impacts of C.D. McIntosh on other nearby Class I areas would affect any of FDEP's BART determinations for this facility and concluded that consideration of these impacts would not change the determinations.

NO_X. The operation of SCR would result in a power requirement of approximately 0.6 percent (2,800 MWh per year) of each unit's power output due to the backpressure of the SCR catalyst and auxiliaries, and there would be some non-air quality environmental impacts associated with the storage and handling of ammonia. Based on CALPUFF modeling results, approximately 19 percent of the total visibility impact on the nearest Class I area is attributable to the NO_X emissions from Units 1 and 2. FDEP's analysis indicated that SCR would result in a visibility improvement of 0.25 deciview at Chassahowitzka NWA. For these reasons, FDEP concluded that SCR is not cost-effective as NO_X BART for these units.

PM BART: Units 1 and 2 are not equipped with PM controls. The existing PM emissions limits for Unit 1are 0.1 lb/MMBtu for normal operation and 0.3 lb/MMBtu for soot-blowing operation. Unit 2 has a limit of 0.1 lb/MMBtu at all times. Lakeland Electric evaluated add-on PM controls including fabric filters, ESPs, and wet FGDs to control PM emissions and identified fabric filters and wet FGDs as technically infeasible options. Based on the costs and the limited use of fuel oil for Unit 1 and 2, FDEP concluded that the addition of an ESP is not cost-effective as PM BART for these units, as discussed below.

Baghouse or venturi scrubber: The feasibility of a fabric filter baghouse depends on site-specific exhaust characteristics such as particulate loading, temperature, and moisture content. The use of a fabric filter control device is uncommon for large oil-fired boilers like Units 1 and 2. The proposed BART analysis in the SIP indicates that PM from firing fuel oil can be sticky which can cause problems with cleaning fabric filters and interfere with effective operation. Likewise, venturi scrubbers are not commonly used for large oil-fired units. In this case, FDEP also determined that venturi scrubbers are undesirable for these units due to the non-air quality environmental impacts associated with wastewater disposal. For these reasons, FDEP concluded that the options of a baghouse or venturi scrubber are not viable as PM BART for these units.

ESP: FDEP determined that an ESP is the only feasible PM BART control option for Units 1 and 2 and that an ESP is the most common and technically feasible option for these types of units. FDEP also concluded that ESPs have a control efficiency of greater than 99 percent and that other technologies have not demonstrated equivalent levels of control for PM compared to an ESP in this application.

FDEP calculated capital and annualized costs for an ESP for both units of approximately $3 million with a cost-effectiveness of $65,865 per ton of PM removed. In addition, FDEP concluded that the installation of ESP would result in a power usage of approximately 0.3 percent (1,400 MWh per year) of each unit's power output due to electric field current usage and backpressure; there would be some non-air quality environmental impacts associated with the disposal of ash in a Class I landfill; and that the installation of an ESP would require approximately two years for construction based on experience from recent retrofit projects. CALPUFF modeling indicates that PM only contributes approximately five percent of the total visibility impact (approximately 0.07 deciview) from Units 1 and 2 at the nearest Class I area. FDEP calculated visibility cost-effectiveness for an ESP at more than $41.7 million per deciview based on the annual costs and estimated visibility improvement identified above.

Summary of FDEP's BART Determination for Lakeland Electric C.D. McIntosh: As discussed above, FDEP has determined that the continued use of 0.7 percent sulfur fuel oil at Unit 2 and the switch to 0.7 percent sulfur fuel oil at Unit 1 as specified in the permit for Lakeland Electric McIntosh constitutes BART for SO_2, and that the controls already in place at the current, permitted emissions limits for NO_X and PM are BART for those pollutants. As identified below, Units 1 and 2 meet BART requirements by complying with the existing NO_X and PM operational and emissions limiting standards at both units, the existing SO_2 standards for Unit 2, and a new SO_2 standard for Unit 1.

SO_2: 0.80 lb/MMBtu when firing fuel oil, met by any of the following options: firing natural gas, co-firing natural gas with fuel oil, or firing fuel oil alone containing not more than 0.7 percent sulfur. Compliance is demonstrated by CEMS.

NO_X: 0.20 lb/MMBtu when firing natural gas or firing fuel oil for Unit 2 by use of the existing FGR controls. Compliance is demonstrated by CEMS. Unit 1 is uncontrolled for NO_X.

PM: 0.1 lb/MMBtu when firing fuel oil and 0.3 lb/MMBtu for soot blowing for Unit 1 and 0.1 lb/MMBtu for Unit 2 at all times. These limits can be met by any of the following options: firing natural gas, co-firing natural gas with fuel oil, or firing fuel oil alone containing less than 0.7 percent sulfur.

5. JEA Northside

JEA's Northside Generating Station is located in Duval County, Florida. The following Class I areas are located within 300 km of the JEA Northside facility: Okefenokee NWA–63 km, Wolf Island NWA–100 km, Chassahowitzka NWA–217 km, and Saint Marks NWA–240 km. Unit 3, the only BART-eligible unit at Northside, is a pre-NSPS boiler with a nominal rating of 564 MW that is fired by natural gas, landfill gas, residual fuel oil, and used oil and is equipped with LNB. Units 1 and 2 are repowered units that were converted to circulating fluidized bed boilers firing mainly petroleum coke and coal (about 10 percent) fuel blends. As part of the repowering of Units 1 and 2, JEA made a commitment to reduce SO_2, NO_X, and PM emissions to 10 percent below the 1994 and 1995 baseline years used in the permitting of the repowering project. As a result, emissions caps for each of these pollutants were incorporated into the federally enforceable permit. Because the repowered units are more efficient and better controlled, operation of Unit 3 was reduced when the new repowered units became operational.

Based on the operation of Unit 3 on oil, the emissions cap that most limits operation is the NO_X cap, which is limited by a federally enforceable title V permit to 3,600 tons per year for Units 1, 2, and 3 over a 12-month rolling average. Based on the sulfur content of the fuels used in Unit 3 in 2002, this annual NO_X limit restricts SO_2 emissions from oil firing to about 9,000 tons per year if Units 1 and 2 are not operating, equivalent to a capacity factor of about 21 percent at the authorized emissions rate. If Units 1 and 2 are fully operational (the usual case), Unit 3 is limited to a maximum of 3,506 tons of SO_2 per year, equivalent to a capacity factor of approximately eight percent at the authorized emissions rate. FDEP has determined that the limited use of fuel oil and the controls already in place at the current, permitted emissions limits are BART for Unit 3. These conditions are included in a federally-enforceable title V permit (No. 0310045–030–AV as condition G.11.b.).

SO_2 BART: Unit 3 is subject to Florida Rule 62–296.405(1)(c)1.a that limits emissions to 1.98 lb of SO_2/MMBtu when firing fuel oil. FDEP identified the use of low sulfur fuel (1.0 percent sulfur grade fuel oil) and FGD, as potential SO_2 control for this unit. FDEP determined that the current operating practice of using no more than 1.8 percent sulfur fuel oil burned alone, or higher sulfur fuel oil co-fired with the requisite amount of natural gas, in order to

comply with the 1.98 lb/MMBtu emissions limit discussed above, is SO_2 BART for Unit 3.

FGD: JEA's BART analysis discussed various post-combustion control technologies that rely on chemical reactions within the control device to reduce the concentration of SO_2 in the flue gas. These included wet and dry FGD . The analysis states that post-combustion controls are typically applied to coal-fired boilers and not to oil-fired units due to chemical reaction technology considerations and efficiencies, and FDEP agrees that add-on controls such as FGD are not a feasible option for Unit 3 which has a limited capacity factor (effectively eight percent) for fuel oil. JEA listed the comparable best available control technology (BACT) determinations for SO_2 controls on oil and gas-fired boilers and stated that none of the comparable oil and gas-fired boilers employed add-on sulfur controls for BACT, but rather utilized low sulfur fuel oil as a means of reducing emissions. According to JEA, it may not be technically feasible to construct wet and dry FGD at Northside without major demolition efforts that would affect the continued operation of this unit.

Lower Sulfur Oil: Switching from 1.8 percent sulfur fuel oil to 1.0 percent sulfur fuel oil is a control method that can result in lower emissions of SO_2 with no added capital investment. FDEP calculated that the cost-effectiveness of converting to 1.0 percent fuel oil from 1.8 percent fuel oil would be $7,184/ton. CALPUFF air quality modeling indicates that the baseline visibility impact using the current permit limit of 1.98 lb/MMBtu (assured by firing fuel oil containing 1.8 percent sulfur) is 3.61 deciviews at the nearest Class I area (Okefenokee NWA) and that the total visibility improvement using one percent sulfur fuel would be 1.08 deciviews. FDEP calculated a resulting average visibility improvement cost-effectiveness of $31.1 million per deciview.

NO_X BART: Unit 3 is currently equipped with LNB, and JEA evaluated SCR and Selective Non-Catalytic Reduction (SNCR) as possible control methods. JEA conducted a feasibility study on this unit and found that the temperature window for the conversion reaction of SNCR was not available on Unit 3, and therefore, that SNCR is not feasible. For its SCR evaluation, FDEP estimated a NO_X control effectiveness of 80 percent corresponding to an emissions reduction of approximately 1,137 tons annually from Unit 3. This value is based on the base load operation of Units 1 and 2 since the three units are subject to a total emissions cap of 3,600 tons per year of NO_X. JEA estimated the capital and annualized costs of SCR to be $30 million and $5.2 million, respectively, with a cost-effectiveness in excess of $4,500/ton. CALPUFF modeling indicates that SCR on Unit 3 would improve visibility by approximately 0.26 deciview at the Okefenokee NWA, resulting in a visibility cost-effectiveness exceeding $20 million per deciview. The analysis adjusted the visibility evaluation to account for the impact of the NO_X cap on the number of days the unit can operate. For the reasons discussed above, FDEP concluded that existing controls are NO_X BART for Unit 3.

PM BART: JEA evaluated add-on controls including fabric filters (e.g., baghouses), ESPs, and venturi scrubbers to control PM emissions and determined that fabric filters and PM scrubbers are technically infeasible for Unit 3. JEA stated that fabric filters are not common for large oil-fired boilers like Unit 3 and that the PM from firing fuel oil can be sticky which can cause problems with cleaning fabric filters and adversely affect control efficiency. Likewise, JEA stated that wet PM scrubbers like venturi scrubbers are not commonly used for large oil-fired units such as Unit 3 and that it would not further consider these controls as BART because of lower control efficiencies (60–90 percent), relatively high operating and maintenance costs, and wastewater disposal issues. Although FDEP considers ESP to be the most common and technically feasible option for Unit 3, it determined that no PM control was appropriate for BART for the reasons discussed below.

ESP: JEA estimated the total capital cost of an ESP at approximately $60 million with a potential reduction in PM emissions of approximately 449 tons per year and an estimated annualized cost of approximately $8.1 million. Using this estimated annualized cost, JEA calculated a cost-effectiveness of $18,083 per ton of PM removed; however, considering the limited use of fuel oil under the federally enforceable limit/cap on emissions, JEA calculated a cost-effectiveness of approximately $29,000 per ton of PM removed. CALPUFF modeling indicates that PM emissions from Unit 3 account for a 0.18 deciview impact at the nearest Class I area (five percent of the maximum 8th highest 24-hour average visibility impact) and that the estimated improvement from the installation of an ESP is 0.10 deciview. Using this estimated visibility improvement and the annualized cost of $8.1 million, the resulting visibility cost-effectiveness is more than $78 million per deciview. JEA also evaluated the other statutory BART factors, including operating costs and remaining useful life, and determined that the installation of ESP will result in a power usage of approximately 0.3 percent (3,600 MWh per year) due to electric field current usage and backpressure and that there would be some non-air quality environmental impacts associated with the disposal of 63 to 148 tons of fly ash annually at a Class I landfill.

Summary of FDEP's BART Determination for JEA Northside: FDEP has determined that the limited use of fuel oil and the controls already in place at the current, permitted emissions limits are BART for Unit 3 at the JEA Northside Plant. This unit will meet the BART requirements by continuing to comply with the following operational and emissions limiting standards:

SO_2: 1.98 lb/MMBtu when firing fuel oil, met by firing natural gas, co-firing natural gas with fuel oil, or firing fuel oil alone containing not more than 1.8 percent sulfur.

NO_X: 0.30 lb/MMBtu when firing natural gas or firing fuel oil. Limits are met through the use of best operating practices for good combustion. Compliance is demonstrated by CEMS.

PM: 0.1 lb/MMBtu when firing fuel oil and 0.3 lb/MMBtu for soot blowing. These limits are met by firing natural gas, co-firing natural gas with fuel oil, or firing fuel oil alone containing less than 1.8 percent sulfur.

6. Gulf Power Lansing Smith

Gulf Power's Lansing Smith Plant is located in Bay County, Florida. The following Class I area is located within 300 km of the Lansing Smith Plant: Saint Marks NWA–149 km. The facility consists of two coal-fired EGUs (Units 1 and 2), two simple cycle peaking units, two combined cycle combustion turbines, and miscellaneous insignificant emissions units. Units 1 and 2 are subject to BART and burn coal, distillate fuel oil, or on-specification used fuel oil. Distillate fuel oil is only used during start-up and flame stabilization, and combustion of on-specification used oil is limited to no more than 50,000 gallons per calendar year per boiler. Unit 1 has a maximum authorized heat input rate of 1,944.8 MMBtu/hr and Unit 2 has a maximum authorized heat input rate of 2,246.2 MMBtu/hr. Units 1 and 2 are both are equipped with hot and cold side ESPs and SNCR. Unit 1 is also equipped with LNB with high momentum injection ports, and Unit 2 has LNB with an overfire air control system.

FDEP has determined that the controls already in place at the current, permitted emissions limits for NO_X and PM are BART for Units 1 and 2. FDEP has also determined that SO_2 emissions and visibility impacts can be further reduced by switching Units 1 and 2 to lower sulfur coal and installing dry sorbent injection (DSI) using trona as a reagent and that these control measures are BART for SO_2 as discussed below. The use of wet FGD, instead of DSI plus low-sulfur coal option, results in an incremental improvement in visibility of only 0.19 deciview for Unit 1 and 0.22 deciview for Unit 2 for the maximum 8th highest day and 0.07 deciview for Unit 1 and 0.09 deciview for Unit 2 for the 22nd highest day over three years at Saint Marks NWA (the nearest Class I area to the facility).[12]

SO_2 BART: FDEP evaluated the following options for SO_2 control: (1) Switch to lower sulfur coal, (2) DSI with use of lower sulfur coal, (3) dry FGD lime spray dryer absorber (SDA), and (4) wet FGD. All of these SO_2 control technologies are considered technically feasible for Units 1 and 2. FDEP's SO_2 BART determination for Units 1 and 2 is a SO_2 emissions rate of 0.74 lb/MMBtu on a 30-day rolling average which can be achieved with the use of DSI with trona as the alkaline reagent. FDEP concluded that FGD is not cost-effective when considering the estimated costs and associated visibility improvement, as discussed below.

Low Sulfur Coal: Gulf Power states that the use of lower sulfur Columbian coal can result in lower SO_2 with no added capital investment and that switching Units 1 and 2 to lower sulfur coal would reduce SO_2 emissions by approximately 25 percent. The fuel switch to lower sulfur coal was assumed to have no additional costs; therefore, Gulf Power did not conduct any further economic analyses for this control option.

DSI with Low Sulfur Coal: DSI is a dry technology that uses an alkaline reagent to absorb SO_2. DSI control technology injects reagent (e.g., trona) directly into the boiler flue gas in the ductwork between the air heater and the particulate collection device. The sulfite/sulfate salts reaction products are then removed by a downstream PM control device. Since a gas/sorbent contacting vessel is not required, the DSI capital costs are lower, less physical space is required, and exhaust duct modifications are simpler compared to a dry FGD lime SDA system. However, reagent costs are higher and SO_2 control efficiencies are lower than those for dry FGD. Gulf Power noted that lime was considered as a component of the MATS rule compliance approach, but that using trona instead of lime would achieve further reductions in SO_2 emissions. Gulf Power estimated that the use of DSI with trona injection combined with lower sulfur coal would have a SO_2 removal efficiency of 48 percent corresponding to a SO_2 emissions rate of 0.74lb/MMBtu on a 30-day rolling average. Gulf Power assumed that the capital cost of DSI and the operation and maintenance costs associated with lime injection will be incurred as a MATS rule compliance plan. However, FEDP determined that the baseline should be existing conditions and conducted an independent evaluation of the cost of DSI. FDEP calculated annualized costs of approximately $2 million for Units 1 and 2, individually. Using these values and SO_2 emissions reductions of 4,175 tons for Unit 1 and 4,451 tons for Unit 2, FDEP calculated a cost-effectiveness of $477 and $435 per ton of SO_2 removed, respectively. The energy impacts associated with the DSI technology are minimal.

Dry FGD Lime SDA: The types of dry FGD systems typically installed on coal-fired boilers are those utilizing either SDA or a circulating dry scrubber (CDS). Gulf Power considered both types of control equipment and concluded that SDA and CDS present similar issues with respect to inadequate available space upstream of the existing PM control device for the installation of new equipment and the need for a larger capacity PM control device. Gulf Power considers a dry FGD lime SDA system as an inferior technology compared to wet FGD and did not further evaluate this type of dry FGD based on its conclusions that: (1) Wet FGD will achieve higher SO_2 removal, (2) dry FGD lime SDA technology is difficult to apply as a retrofit to existing boilers due to space considerations, (3) with the increased PM loading, a new PM control device will need to be installed, and (4) with the inclusion of the cost of a baghouse for the dry FGD lime SDA option, wet FGD will achieve greater emissions reductions at a lower cost compared to the dry FGD lime SDA system.

Wet FGD: Gulf Power estimated that the control effectiveness of wet FGD is 95 percent SO_2 removal for Units 1 and 2 and that the capital and annualized costs are approximately $112 million and $14.5 million, respectively, for Unit 1 and $133 million and $16.6 million, respectively, for Unit 2. Based on a removal efficiency of 95 percent, SO_2 emissions reductions would be 7,794 tons for Unit 1 and 8,256 tons for Unit 2 for a cost-effectiveness of $1,862 and $2,009 per ton, respectively. Incremental cost-effectiveness from DSI with lower sulfur coal was estimated to be $3,451 and $3,850, respectively. Gulf Power expects that wet FGD would impose an energy penalty of four MW per unit due to the increased fan power required to compensate for the higher pressure drop of the absorber vessel and that wet FGD would require substantial amounts of water and generate a wastewater stream that will require treatment.

To evaluate visibility impacts for each unit at the Saint Marks Class I area, Gulf Power conducted CALUFF modeling for each SO_2 control technology evaluated. For Unit 1, the model predicted improvements in visibility ranging from 0.37 deciview for the switch to low-sulfur coal to 0.67 deciview for wet FGD for the maximum 8th highest day for the highest year of the three years modeled, and from 0.34 deciview to 0.51 deciview, respectively, for the 22nd highest day over the three years compared to the ''existing controls'' baseline levels. Modeled visibility improvements for Unit 2 range from 0.27 deciview for the switch to low-sulfur coal to 0.61 deciview for wet FGD for the maximum 8th highest day for the highest year each of the three years modeled and from 0.24 deciview and 0.45 deciview, respectively, for the 22nd highest day over the three years modeled compared to ''existing controls'' baseline levels. The use of wet FGD instead of DSI plus low-sulfur coal results in a predicted incremental improvement in visibility of 0.19 deciview for Unit 1 and 0.22 deciview for Unit 2 for the maximum 8th highest day for the highest year of the three years modeled, and 0.07 deciview for Unit 1 and 0.09 deciview for Unit 2 for the 22nd highest day over three years. Using these modeling results and the costs identified above, the cost per deciview improvement for wet FGD is approximately $21.7 million/deciview for Unit 1 and $27.2 million/deciview for Unit 2. The incremental cost per deciview improvement for wet FGD (compared to DSI) is $178.9 million for Unit 1 and $162.8 million for Unit 2.

NO_X BART: Units 1 and 2 are equipped with LNB with high momentum injection ports, and Unit 2 uses LNBs with an overfire air control

[12] Saint Marks NWA is the only mandatory Class I federal area within the surrounding 300 km CALPUFF modeling domain used by FDEP to assess visibility impacts. The visibility impacts in the Class I areas just outside of this domain resulting from Lansing Smith emissions are expected to be lower than those predicted at Saint Marks, and EPA has determined that consideration of these impacts would not change the BART determinations.

system. In addition to LNB, both units use SNCR for additional NO_X control. Gulf Power evaluated the installation of SCR, and FDEP determined that the existing controls (LNB, overfire air system, and SNCR), along with good combustion practices, are NO_X BART for Units 1 and 2. FDEP did not select SCR as BART due to a cost-effectiveness of $5,000 per ton for Unit 1 and $7,000 per ton for Unit 2 with limited predicted visibility improvement.

SCR: As discussed above, the baseline NO_X control technology for Units 1 and 2 includes current combustion controls plus SNCR. Gulf Power estimated that the capital and annualized costs associated with SCR are approximately $66 million and $7.9 million, respectively, for Unit 1 and $74.9 million and $8.9 million, respectively, for Unit 2. FDEP assumed a control efficiency of 90 percent for SCR, resulting in NO_X emissions reductions of 1,619 tons for Unit 1 and 1,279 tons for Unit 2 for a cost-effectiveness of $4,907 and $6,957 per ton, respectively. Gulf Power provided CALPUFF modeling indicating that the installation of SCR at Unit 1 would result in a maximum visibility improvement of 0.01 deciview for the maximum 8th highest day at the St. Marks Class I area for each of the three years modeled and that there is no improvement for the 22nd highest day over the three years modeled compared to ''existing controls'' baseline levels. Furthermore, FDEP notes that baseline visibility impacts due to NO_X emissions are only 3.9 percent of the total baseline impact at the nearest Class I area. FDEP estimated that the energy impacts associated with SCR are one MW for each unit to run pumps and to overcome the high pressure drop in the systems.

PM BART: Units 1 and 2 are equipped with hot and cold side ESPs that achieve PM emissions rates of 0.014 and 0.015 lb/MMBtu. Therefore, Gulf Power conducted the PM BART analysis for only a fabric filter technology such as a baghouse. FDEP determined that the existing ESPs on Units 1 and 2 are PM BART and that no additional add-on control technologies are required for the reasons discussed below.

Fabric Filters: The collection efficiencies for fabric filter technology are approximately 99 percent for PM smaller than 2.5 microns, resulting in projected PM emissions reductions of 44 tons for Unit 1 and 37 tons for Unit 2. Gulf Power estimated that the capital and annualized costs of fabric filters are approximately $35.8 million and $4.8 million, respectively, for Unit 1 and $42.6 million and $5.6 million, respectively, for Unit 2 for a cost-effectiveness of $108,566 and $153,268 per ton of PM removed for Units 1 and 2, respectively. Gulf Power concluded that there were no modeled improvements in visibility at the nearest Class I area for both the maximum 8th highest day for each of the three years modeled and 22nd highest day over the three years modeled compared to the existing control baseline levels (i.e., visibility levels from existing ESP controls) due to the use of fabric filter technology and that the baseline visibility impacts due to PM emissions are only 1.3 percent of the total baseline impact at the nearest Class I area. Gulf Power estimated that the energy impacts associated with the fabric filter system are one MW for each unit due to the need for extra fan horsepower to overcome the increased pressure drop in the boiler exhaust system and that the higher PM removal efficiency would increase the amount of solid waste that will need to be disposed of in an onsite or offsite landfill.

Summary of FDEP's BART Determination for Gulf Power Lansing Smith:

As discussed above, FDEP has determined that the controls already in place at the current, permitted emissions limits for NO_X and PM are BART for Gulf Power's Lansing Smith Plant Units 1 and 2, and that these units will meet the SO_2 BART requirements by installing a DSI/trona system and switching to lower sulfur coal. The BART operational and emissions limiting standards for Lansing Smith Units 1 and 2 are specified in the facility's title V permit and are summarized below:

SO_2: 0.74 lb/MMBtu for Unit 1 and 0.74 lb/MMBtu for Unit 2.

NO_X: The combined NO_X emissions from Units 1 and 2 shall not exceed 4,700 tons during any consecutive 12-month rolling total as determined by CEMS data reported to the EPA Acid Rain database.

PM: Emissions shall not exceed 0.1 lb/MMBtu. Compliance is demonstrated by annual stack test.

7. FPL Turkey Point

FPL's Turkey Point facility is located in Miami-Dade County, Florida. The following Class I area is located within 300 km of the Turkey Point facility: Everglades NP–35 km. The facility consists of two residual fuel oil and natural gas-fired 440 MW fossil fuel steam EGUs (Units 1 and 2); five fuel oil-fired black start 2.75 MW diesel peaking generators supporting Units 1 and 2; a natural gas-fueled 1,150 MW combined cycle unit (Unit 5); and associated equipment. Units 1 and 2 are subject to BART and are each equipped with LNB and multi-cyclones with ash reinjection. The multi-cyclones consist of two tubular mechanical dust collector modules with 695 tubes per collector.

In 2009, FDEP issued a PM-only BART determination for Units 1 and 2 that imposed a 20 percent visible emissions limit, a 0.7 percent sulfur fuel oil restriction, and upgrades to the multi-cyclones to achieve a 0.07 lb/MMBtu PM emissions rate. FDEP assumed this would require installation of a $3.7 million ESP on each unit. In addition, the determination required FPL to conduct a PM control device additive study to determine if a 0.05 lb/MMBtu emissions rate could be achieved. FPL completed the study in 2010 showing that the lower limit was not achievable using a calcium-based additive. On September 9, 2011, FPL submitted a revised PM BART proposal to eliminate the requirement to upgrade the multi-cyclones on Unit 1 and to continue to use the existing multi-cyclone to meet a limit of 0.07 lb/MMBtu as BART for this unit based on the limited use of oil in Unit 1 and FPL's conclusions that the visibility impacts from PM are negligible and that there is little incremental visibility benefit of a new dust collector. Subsequent to the request to change the PM BART limitations, FPL submitted a new proposed BART determination to FDEP that addresses SO_2 and NO_X.

FDEP determined that Unit 1 will meet SO_2 BART by restricting the use of fuel oil to 8,760,000 MMBtu/year heat input (equivalent to a capacity factor of 25 percent) and by reducing the sulfur content of the fuel fired in Unit 1 to 0.7 percent by weight as soon as practicable but no later than December 31, 2013. These provisions have been added to state permit No. 0250003–018–AC, which is federally enforceable. This permit also requires the permanent shutdown of Unit 2 as soon as practicable but no later than December 31, 2013. FDEP also determined that the controls already in place at the current, permitted emissions limits for NO_X and PM are consistent with the original BART determination for Unit 1 made by FDEP in 2009 that required the multi-cyclones to meet a 0.07 lb/MMBtu limit for PM.

PM BART: Based on information submitted by FPL, FDEP determined that new ESPs could meet an emissions limit of 0.03 lb/MMBtu and reduce emissions from both units by a total of 1,257 tons at an estimated annualized cost of approximately $6.7 million for each ESP for a cost-effectiveness of $10,623/ton of PM removed (excluding any costs associated with any changes

in construction due to the close proximity of the Turkey Point nuclear units 3 and 4). According to FPL, ESP construction for Units 1 and 2 would increase security requirements and potentially require approval from the United States Nuclear Regulatory Commission due to the proximity of Units 1 and 2 to the facility's nuclear units. FPL estimated that the energy required to operate two ESPs would be approximately 4,370 MWh per year for both units (0.13 percent of gross generation from units 1 and 2) and that 1,257 tons of ash would be generated from the ESPs requiring about 50 truck trips per year to remove it from the site for recycling or landfill disposal.

In evaluating whether to change the 2009 PM BART determination, FDEP considered the limited use of oil at Units 1 and 2 after compliance with SO_2 BART. FDEP has established a federally enforceable permit condition requiring the permanent shut down of Unit 2. FDEP is also restricting oil firing on Unit 1 to 8,760,000 MMBtu/year heat input (equivalent to a capacity factor of 25 percent). Therefore, FDEP determined that the emissions reductions from a new ESP on Unit 1 are further diminished, resulting in an even higher cost per ton of PM removed than those estimated above. As an alternative PM emissions reduction strategy, FDEP has approved the use of low sulfur residual fuel oil (0.7 percent versus the one percent sulfur oil used during the baseline period) and a reduction in the PM limit from the current allowable emissions rate of 0.1 lb/MMBtu to 0.07 lb/MMBtu, which is achievable with the existing multi-cyclones controls and the lower sulfur fuel oil. At a comparative cost of less than $3,600/ton of PM removed, FDEP considered this option cost-effective given the source's proximity to the nearest Class I area (Everglades NP) and estimated a visibility improvement of 0.6 deciview (i.e., 29 percent reduction in visibility impacts from the base case).

SO_2 BART: FPL evaluated wet and dry FGD and lower sulfur fuel oil (at 0.7 percent and 0.3 percent sulfur content) as possible SO_2 BART controls. Although technically feasible to install, FPL cites capital cost estimates of between $40 and $100 million for FGD on Units 1 and 2 and the lack of comparable units that fire gas and fuel oil with wet or dry FGD installations. FPL found no determinations for oil and gas-fired units employing FGD in EPA's RACT/BACT/LAER Clearinghouse,[13] and all of the determinations identified by FPL used lower sulfur fuel oil to reduce SO_2 emissions. FPL does not believe that a dry FGD combined with a baghouse is feasible for Units 1 and 2 since tests conducted by FPL at its Sanford power plant found that particles generated from the combustion of oil-based fuels caused considerable plugging of bags in pilot scale tests. Compared to firing natural gas, fuel oil has a significantly higher sulfur content, and FDEP has determined that limiting fuel oil firing on Unit 1 to no more than a 25 percent capacity factor and limiting the sulfur content to 0.7 percent is SO_2 BART for Unit 1.

NO_X BART: FPL evaluated SCR and SNCR as potential NO_X controls for Unit 1. FDEP determined that the limited capacity factor for fuel oil (the higher NO_X producing fuel) makes the use of add on NO_X controls economically infeasible. Unit 1 is currently required to meet an emissions limit of 0.40 lb/MMBtu on gas and 0.53 lb/MMBtu on fuel oil based on a 30-day rolling average and CEMS to satisfy Florida Rule 62–296.570 for NO_X reasonably available control technology (RACT). Since Unit 2 is required to permanently shut down, FPL did not perform a control evaluation for Unit 2. Further, the baseline modeling showed that nitrates contributed less than three percent of the visibility degradation associated with the emissions from this facility.

Summary of FDEP's BART Determination for FPL Turkey Point: Permit No. 0250003–018–AC requires FPL to permanently shut down Unit 2 as soon as practicable but no later than December 31, 2013. This permit is federally enforceable. For Unit 1, FDEP has determined that NO_X BART are the controls already in place at the current, permitted emissions limits and for PM and SO_2, BART is the restricted use of fuel oil to 8,760,000 MMBtu/year heat input (equivalent to a capacity factor of 25 percent). The BART operational and emissions limiting standards for FPL Turkey Point Unit 1 are summarized below:

SO_2: As soon as practicable, but not later than December 31, 2013, the sulfur content of the fuel fired in Unit 1 shall not exceed 0.7 percent, by weight and SO_2 emissions from Unit 1 shall not exceed 0.77 lb/MMBtu on a three-hour rolling average. Compliance shall be demonstrated through the use of the existing CEMS.

NO_X: NO_X emissions from Unit 1 shall not exceed the following limits based on a 30-day rolling average: 0.40 lb/MMBtu and 1,610 lb/hour when burning gas and 0.53 lb/MMBtu and 2,041 lb/hour when burning oil.

PM: Emissions of PM are limited to 0.07 lb/MMBtu when firing fuel oil. Limits will be met by firing natural gas, co-firing natural gas with fuel oil containing less than 0.7 percent sulfur, and through the use of multi-cyclones (mechanical dust collectors) and fly ash reinjection. Compliance will be demonstrated by stack tests when fuel oil is fired for more than 400 hours annually.

8. PEF Crystal River

PEF's Crystal River Power Plant is located in Citrus County, Florida. The following Class I areas are located within 300 km of the Crystal River Plant: Saints Marks NWA–174 km, Chassahowitzka NWA–21 km, Wolf Island NWA–293 km, and Okefenokee NWA–178 km. The facility consists of four coal-fired EGUs and associated equipment. Units 1 and 2 are subject to BART and NSPS subpart Da. These units are tangentially-fired, dry-bottom boilers with a nominal generation capacity of 440.5 and 523.8 MW, respectively, that may burn bituminous coal or a bituminous coal and bituminous coal briquette mixture. Distillate fuel oil may be burned as a startup fuel. Each unit has an ESP to control PM and LNB to control NO_X and is equipped with CEMS to measure and record NO_X and SO_2 emissions and a continuous opacity monitoring system to measure and record the opacity of the exhaust gases.

PEF has proposed to satisfy SO_2 and NO_X BART requirements through an approach that would allow the company to select one of two compliance options. The first option would require the installation of a dry FGD and SCR to these units by 2018 and would extend the life of these units. The second option would shut down these units by December 31, 2020, with no new controls being installed. PEF has requested that it have until January 1, 2015, to state which option it will pursue because it is in the process of ownership change and decisions on how these units will be addressed in response to other federal regulations are uncertain. FDEP believes that either of the two options meet the BART requirements, and FDEP has allowed PEF until January 1, 2015, to choose an option. These options and the option selection date are included in a federally enforceable permit.

FDEP concluded that additional control strategies for SO_2 and NO_X are not cost-effective if the units shutdown by December 31, 2020. Should PEF choose not to shut down Units 1 and 2,

[13] EPA's RACT/BACT/LAER Clearinghouse is located at: *http://cfpub.epa.gov/RBLC/index.cfm?action=Home.Home&lang=en.*

Option 2 of the permit requires PEF to install dry FGD to meet an emissions limit of 0.15 lb/MMBtu on a 30-day rolling average, or 95 percent control efficiency, and SCR to achieve 90 percent removal efficiency by January 1, 2018.

For PM BART, FDEP determined that a PM limitation of 0.04 lb/MMBtu for the combined units is PM BART. A federally enforceable PM BART permit was issued for Units 1 and 2 on February 25, 2009 (Permit No. 0170004–017–AC), which imposed this revised allowable PM emissions limit. In this earlier BART determination, PEF proposed to upgrade the existing ESP for Unit 2 to reduce the allowable PM limit from 0.1 lb/MMBtu to 0.04 lb/MMBtu (average for both units), and to permanently cease operating the units as coal-fired boilers by the end of the year 2020. FDEP determined that additional PM control, beyond 0.04 lb/MMBtu, is not necessary for BART given the control costs associated with the limited visibility improvement resulting from a more stringent limit. In the latest issued permit for SO_2 and NO_X BART, FDEP recognized that under the option to continue operation, the installation of a dry FGD system will necessitate additional PM control to avoid significant emissions increases. Therefore, FDEP will limit PM emissions to 0.015 lb/MMBtu at both units should PEF select the SO_2 control technology option to satisfy SO_2 BART.

SO_2 BART: The facility currently burns 1.02 percent sulfur coal and has a baseline emissions rate of 38,250 tons per year of SO_2. PEF evaluated three options for SO_2 control: (1) Switch to lower sulfur coal, (2) dry FGD lime SDA, and (3) wet FGD. All of these available retrofit SO_2 control technologies are technically feasible for Units 1 and 2. However, FDEP determined that switching to a lower sulfur fuel or installing an FGD system is not cost-effective if PEF retires the units by December 31, 2020. Without this retirement date, FDEP determined that a SO_2 emissions rate of 0.15 lb/MMBtu on a 30-day rolling average, or 95 percent control efficiency, is SO_2 BART and can be achieved through the use of controls such as dry FGD.

Low Sulfur Coal: Units 1 and 2 currently burn bituminous coal, a bituminous coal and bituminous coal briquette mixture, distillate fuel oil, or on-specification used fuel oil. Distillate fuel oil is only used during start-up and flame stabilization. PEF evaluated the use of lower sulfur coal in Units 1 and 2 and indicated that bituminous coal with a sulfur content of 0.68 percent and sub-bituminous coal with a sulfur content of 0.35 percent from the PRB are commercially available. For the low sulfur coal control options, PEF assumed that an ESP upgrade would be necessary to accommodate the 0.68 percent sulfur coal, and a replacement of the ESPs with baghouses and modification of other equipment would be required to fire the 0.35 percent PRB coal. For this analysis, PEF assumed that ESP upgrades or ESP replacement and other equipment modifications would not be complete until 2018. PEF estimated costs at approximately $155 million in capital expenditures to switch the units to 0.68 percent sulfur fuel based on an ESP upgrade with annualized costs of $97.5 million assuming closure in 2020. PEF estimated capital costs of approximately $516 million and annualized costs of $297 million for the 0.35 percent sulfur fuel considering cost factors including performance, coal handling performance, and safety for 0.35 percent coal and the replacement of an ESP with a baghouse. The estimated annual SO_2 reductions are 12,250 and 20,250 tons per year, respectively, resulting in cost-effectiveness estimates of $8,665 and $14,652 per ton of SO_2 removed, respectively. PEF states that energy impacts (derating of the power generating capability of the units) would likely be associated with the use of PRB coal due to the lower heating values compared to the current coal used in Units 1 and 2. The heating values of the coal currently used are approximately 12,000 British thermal units per pound (Btu/lb) compared to the heating value of 8,500 Btu/lb for PRB coal.

Wet FGD or Dry FGD Lime SDA: PEF evaluated the potential use of wet and dry FGD on Units 1 and 2 to reduce SO_2 emissions, assuming a control efficiency of 95 percent. PEF discusses SDA control equipment but states that the installation of the technology is a concern due to inadequate available space and the conditions of the units and that the installation of dry FGDs would also necessitate additional PM control to prevent significant emissions increases. The PEF analysis states that the control efficiency of a wet FGD system is between 56 and 98 percent and the control efficiency of a dry FGD is between 70 and 96 percent.

FDEP estimated that the capital costs for installation of dry FGD systems are approximately $445 million for Units 1 and 2, combined, with a total annualized cost for installation and operation of the dry FGD systems of $364 million for a cost-effectiveness of over $10,000 per ton of SO_2 removed. These annualized costs represent the annualized capital cost as well as recurring annual operating costs for each unit assuming the facility shuts down in 2020. PEF determined that the operation of dry FGD imposes an energy penalty due to the increased fan power required to compensate for the higher pressure drop of the absorber vessel and that it would have non-air quality environmental impacts due to the generation of additional solids. For a wet FGD, non-air quality environmental impacts would include increased energy use, increased water use, and the generation of additional solid wastes.

NO_X BART: PEF identified SCR and SNCR as technically feasible options for Units 1 and 2 and noted that although there are examples where SNCR is installed on coal-fired boilers, this technology is more common for smaller boilers in the 100 MW size range. For large pulverized coal fired boilers, PEF regards SCR as a demonstrated technology and SNCR as not demonstrated. FDEP concluded that the existing combustion process, LNBs, and use of good combustion practices are NO_X BART for Units 1 and 2 under the option to shut down these units by December 31, 2020. Should PEF choose not to shut down these units, the permit establishes a NO_X emissions limit of 0.09 lb/MMBtu on a 30-boiler operating day rolling average basis. The emissions standard will be achieved by the installation and operation of NO_X control systems including SCR before January 1, 2018, or within five years of EPA's final approval of Florida's final regional haze SIP, whichever is later.

SCR: PEF states that the control effectiveness of SCR technology can be up to 90 percent. Assuming that the facility shuts down in 2020, FDEP estimated annualized costs of approximately $92.6 million and a cost-effectiveness of $8,244 per ton of NO_X removed using the methodology in EPA's *Air Pollution Control Cost Manual* (*http://www.epa.gov/ttncatc1/products.html#cccinfo*). The cost-effectiveness was estimated based on 90 percent control of baseline emissions of 12,480 tons (i.e., 11,232 tons of reduction of NO_X), which was determined from the maximum annual actual emissions for Units 1 and 2 combined from the period 2001–2003. Annual costs were developed based on a capital cost of $193/kilowatt (kW) and a fixed operation and maintenance cost of $0.7/kW. CALPUFF modeling indicates that SCR would improve visibility by 1.71 deciviews at the nearest Class I area (Chassahowitzka NWA) for the maximum 8th high day (2003) for a visibility cost-effectiveness of $54.2 million/deciview. PEF estimates that the installation of SCR

will result in a power requirement of approximately 0.6 percent (50,700 MWh per year) due to the backpressure of the SCR catalyst and auxiliary equipment, and that there would be some non-air quality environmental impacts associated with the storage and handling of ammonia. PEF indicated that ammonia slip is an issue with both SCR and SNCR operation due to odor and ammonium salt formation. If urea is used with these control technologies, water treatment would be required.

SNCR: PEF evaluated SNCR for Units 1 and 2 using a control effectiveness of approximately 25 percent and a capital cost of $19/kW and fixed operation and maintenance cost of $0.2/kW. FPL conservatively estimated an annualized cost of $8.4 million for a cost-effectiveness of $2,687 per ton of NO_X removed. CALPUFF modeling predicts a visibility improvement of 0.47 deciview at the Chassahowitzka NWA for the maximum 8th high day (2003) from SNCR on both units for a visibility cost-effectiveness of approximately $17.7 million/deciview. If SNCR is installed, PEF states that additional electrical power will be required to operate the reagent handling system and that a water treatment system will be required if urea is used as a reagent, which will also need additional power. PEF also indicated that ammonia slip is an issue with SNCR operation, as discussed above.

PM BART: CALPUFF modeling indicates that replacing the existing ESPs with new control devices (i.e., new ESP or baghouse) designed to meet an emissions limit of 0.015 lb/MMBtu would improve visibility by a maximum of 0.15 deciview (based on the maximum 8th highest 24-hour average of each of the three years modeled) at the nearest Class I area. PEF also estimated that the capital cost of upgrading the existing PM controls or replacing them with new control devices would range from $71 million to $144 million. Considering the age of the units and the cost of replacing the ESPs, PEF proposed to upgrade the existing ESP for Unit 2, reduce the allowable PM limit from 0.1 lb/MMBtu to 0.04 lb/MMBtu (average for both units), and to permanently cease operating the units as coal-fired boilers by December 31, 2020. FDEP determined that meeting an emissions standard of 0.015 lb/MMBtu can be achieved by all proposed options. However, FDEP concluded that it is not reasonable to require the capital expenditure needed to bring emissions down to levels achievable by new units and control devices given the limited remaining useful life. Therefore, FDEP determined that reducing PM emissions from the current allowable emissions limit of 0.1 lb/MMBtu to levels near what has been reported in stack tests over the past five years (0.04 lb/MMBtu) with a commitment to cease operating these units as coal-fired boilers by December 31, 2020, is BART. Should PEF choose not to shut down Units 1 and 2, it must install SO_2 control technology. The SO_2 BART determination (Permit No. 0170004–036–AC) includes a requirement that no later than January 1, 2018, or within five years of the effective date of EPA's approval of this specific requirement in the Florida regional haze SIP, whichever is later, PM emissions shall not exceed 0.015 lb/MMBtu, as determined by EPA Method 5.

Summary of FDEP's BART Determination for PEF Crystal River: As discussed above, FDEP has determined that if these units are shutdown by December 31, 2020, additional control strategies for SO_2 and NO_X are not cost-effective and a PM limitation of 0.04 lb/MMBtu for the combined two units is deemed to be BART. Should PEF choose not to shutdown Units 1 and 2, PEF must install SO_2 and NO_X control technology to meet the limits as specified in the permit and summarized below, by January 1, 2018. However, the permit authorizing PEF to construct the SO_2 control, should that option be selected, assumes that this control will be a dry FGD and limits PM to 0.015 lb/MMBtu at both units. FDEP has allowed PEF until January 1, 2015, to choose the BART option that it wishes to follow. Under the option to shutdown by December 31, 2020, BART is compliance with the following operational and emissions limiting standards:

SO_2: Existing controls for Units 1 and 2. (Permit No. 0170004–017–AC.)

NO_X: Existing controls for Units 1 and 2. (Permit No. 0170004–017–AC.)

PM: 0.04 lb/MMBtu for combined emissions from Units 1 and 2. Compliance demonstrated by stack test.

Under the option to continue operation of Units 1 and 2, BART is compliance with the following operational and emissions limiting standards:

SO_2: 0.15 lb/MMBtu or 95 percent reduction for Units 1 and 2

NO_X: 0.09 lb/MMBtu for Units 1 and 2

PM: 0.015 lb/MMBtu for combined emissions from Units 1 and 2. Compliance demonstration by a stack test.

9. EPA Assessment of BART Determinations

EPA proposes to approve Florida's BART analyses and determinations for the units identified above because the analyses were conducted in a manner that is consistent with EPA's BART Guidelines and EPA's *Air Pollution Control Cost Manual* and because Florida's conclusions reflect a reasonable application of EPA's guidance to these sources.

C. Reliance on CAIR

Although Florida no longer relies on CAIR to satisfy regional haze requirements for any sources within the State, the underlying emissions inventories and projections of reductions from upwind states continue to include assumptions based on the implementation of CAIR. Given the requirement in 40 CFR 51.308(d)(1)(vi) that states must take into account the visibility improvement that is expected to result from the implementation of other CAA requirements, Florida based its RPGs, in part, on the emissions reductions expected to be achieved by CAIR and other measures being implemented across the southeast region as modeled for Florida by the Visibility Improvement State and Tribal Association of the Southeast (VISTAS).[14] As CAIR has been remanded by the DC Circuit, some of the assumptions underlying the development of this element of the RPGs may change. EPA is proposing to determine that this reliance on CAIR in upwind states in the underlying analysis does not require EPA to withhold full approval of Florida's regional haze SIP.

As explained above, the 2008 remand of CAIR was followed by a 2012 decision in *EME Homer Generation, L.P.* v. *EPA,* No. 11–1302 (DC Cir., August 21, 2012), to vacate the Transport Rule and keep CAIR in place pending the promulgation of a valid replacement rule. In this unique circumstance, EPA believes that full approval of the SIP submission is appropriate. To the extent that Florida is relying on emissions reductions associated with the implementation of CAIR in other states in its regional haze SIP, the recent

[14] The VISTAS Regional Planning Organization (RPO) is a collaborative effort of state governments, tribal governments, and various federal agencies established to initiate and coordinate activities associated with the management of regional haze, visibility and other air quality issues in the southeastern United States. Member state and tribal governments include: Alabama, Florida, Georgia, Kentucky, Mississippi, North Carolina, South Carolina, Tennessee, Virginia, West Virginia, and the Eastern Band of the Cherokee Indians.

directive from the DC Circuit in *EME Homer* ensures that the reductions associated with CAIR will be sufficiently permanent and enforceable for the necessary time period. EPA has been ordered by the court to develop a new rule and the opinion makes clear that after promulgating that new rule, EPA must provide states an opportunity to draft and submit SIPs to implement that rule. Thus, CAIR cannot be replaced until EPA has promulgated a final rule through a notice-and-comment rulemaking process, states have had an opportunity to draft and submit regional haze SIPs, EPA has reviewed the SIPs to determine if they can be approved, and EPA has taken action on the SIPs, including promulgating a federal implementation plan if appropriate. These steps alone will take many years, even with EPA and the states acting expeditiously. The court's clear instruction to EPA that it must continue to administer CAIR until a ''valid replacement'' exists provides an additional backstop; by definition, any rule that replaces CAIR and meets the court's direction would require upwind states to eliminate significant downwind contributions.

Further, in vacating the Transport Rule and requiring EPA to continue administering CAIR, the DC Circuit emphasized that the consequences of vacating CAIR ''might be more severe now in light of the reliance interests accumulated over the intervening four years.'' *EME Homer,* slip op. at 60. The accumulated reliance interests include the interests of states who reasonably assumed they could rely on reductions associated with CAIR to meet certain regional haze requirements. For these reasons also, EPA believes it is appropriate to allow Florida to rely on reductions associated with CAIR in other states as sufficiently permanent and enforceable pending a valid replacement rule for purposes such as evaluating RPGs in the regional haze program. Following promulgation of the replacement rule, EPA will review regional haze SIPs as appropriate to identify whether there are any issues that need to be addressed.

Finally, unlike the enforceable emissions limitations and other enforceable measures in the LTS, RPGs are not directly enforceable. *See* 64 FR 35733, 40 CFR 51.308(d)(1)(v). The data provided by Florida indicate that EPA can reasonably expect the projected SO_2 emissions reductions in 2018 to be sufficient to meet the projected RPGs. As noted in the May 25, 2012, proposal, EPA believes that the five-year progress report is the appropriate time to address any changes, if necessary, to the RPG demonstration and/or the LTS. EPA expects that this demonstration will address the impacts on the RPGs of any needed adjustments to the projected 2018 emissions due to updated information on the emissions for EGUs and other sources and source categories. If this assessment determines that an adjustment to the regional haze plan is necessary, EPA regulations require a SIP revision within a year of the five-year progress report. *See* 40 CFR 51.308(h)(4).

IV. What action is EPA taking?

EPA is proposing a full approval of the BART and reasonable progress determinations identified in Tables 1 and 2, above. In addition, EPA proposes to find that Florida's September 17, 2012, regional haze SIP amendment corrects the deficiencies that led to the proposed May 25, 2012, limited approval and proposed December 30, 2011, limited disapproval of the State's entire regional haze SIP and that Florida's regional haze SIP now meets all of the applicable regional haze requirements as set forth in sections 169A and 169B of the CAA and in 40 CFR 51.300–308. EPA is therefore withdrawing the previously proposed limited disapproval of Florida's entire regional haze SIP and is now proposing full approval.

V. Statutory and Executive Order Reviews

Under the CAA, the Administrator is required to approve a SIP submission that complies with the provisions of the Act and applicable federal regulations. 42 U.S.C. 7410(k); 40 CFR 52.02(a). Thus, in reviewing SIP submissions, EPA's role is to approve state choices, provided that they meet the criteria of the CAA. Accordingly, this proposed action merely approves state law as meeting federal requirements and does not impose additional requirements beyond those imposed by state law. For that reason, this proposed action:

- Is not a ''significant regulatory action'' subject to review by the Office of Management and Budget under Executive Order 12866 (58 FR 51735, October 4, 1993);
- Does not impose an information collection burden under the provisions of the Paperwork Reduction Act (44 U.S.C. 3501 *et seq.*);
- Is certified as not having a significant economic impact on a substantial number of small entities under the Regulatory Flexibility Act (5 U.S.C. 601 *et seq.*);
- Does not contain any unfunded mandate or significantly or uniquely affect small governments, as described in the Unfunded Mandates Reform Act of 1995 (Pub. L. 104–4);
- Does not have Federalism implications as specified in Executive Order 13132 (64 F43255, August 10, 1999);
- Is not an economically significant regulatory action based on health or safety risks subject to Executive Order 13045 (62 FR 19885, April 23, 1997);
- Is not a significant regulatory action subject to Executive Order 13211 (66 FR 28355, May 22, 2001);
- Is not subject to requirements of Section 12(d) of the National Technology Transfer and Advancement Act of 1995 (15 U.S.C. 272 note) because application of those requirements would be inconsistent with the CAA; and
- Does not provide EPA with the discretionary authority to address, as appropriate, disproportionate human health or environmental effects, using practicable and legally permissible methods, under Executive Order 12898 (59 FR 7629, February 16, 1994).

In addition, this proposed rule does not have tribal implications as specified by Executive Order 13175 (65 FR 67249, November 9, 2000), because the SIP is not approved to apply in Indian country located in the state, and EPA notes that it will not impose substantial direct costs on tribal governments or preempt tribal law.

List of Subjects in 40 CFR Part 52

Environmental protection, Air pollution control, Intergovernmental relations, Nitrogen oxides, Particulate matter, Reporting and recordkeeping requirements, Sulfur dioxide, Volatile organic compounds.

Authority: 42 U.S.C. 7401 *et seq.*

Dated: November 30, 2012.

A. Stanley Meiburg,

Acting Regional Administrator, Region 4.

[FR Doc. 2012–29764 Filed 12–7–12; 8:45 am]

BILLING CODE 6560–50–P

ENVIRONMENTAL PROTECTION AGENCY

40 CFR Part 52

[EPA–R03–OAR–2010–0143; FRL–9759–5]

Approval and Promulgation of Air Quality Implementation Plans; Maryland; the 2002 Base Year Inventory for the Baltimore, MD Nonattainment Area for the 1997 Fine Particulate Matter National Ambient Air Quality Standard

AGENCY: Environmental Protection Agency (EPA).

ACTION: Proposed rule.

SUMMARY: EPA proposes to approve the fine particulate matter ($PM_{2.5}$) 2002 base year emissions inventory portion of the State of Maryland State Implementation Plan (SIP) revision submitted by the State of Maryland, through the Maryland Department of the Environment (MDE), on June 6, 2008 for Baltimore, Maryland. In the Final Rules section of this **Federal Register**, EPA is approving the State's SIP submittal as a direct final rule without prior proposal because the Agency views this as a noncontroversial submittal and anticipates no adverse comments. A more detailed description of the State submittal and EPA's evaluation is included in a Technical Support Document (TSD) prepared in support of this rulemaking action. A copy of the TSD is available, upon request, from the EPA Regional Office listed in the **ADDRESSES** section of this document. If no adverse comments are received in response to this action, no further activity is contemplated. If EPA receives adverse comments, the direct final rule will be withdrawn and all public comments received will be addressed in a subsequent final rule based on this proposed rule. EPA will not institute a second comment period. Any parties interested in commenting on this action should do so at this time.

DATES: Comments must be received in writing by January 9, 2013.

ADDRESSES: Submit your comments, identified by Docket ID Number EPA–R03–OAR–2010–0143 by one of the following methods:

A. *www.regulations.gov.* Follow the on-line instructions for submitting comments.

B. *Email: mastro.donna@epa.gov.*

C. *Mail:* EPA–R03–OAR–2010–0143, Donna Mastro, Associate Director, Office of Air Program Planning, Mailcode 3AP30, U.S. Environmental Protection Agency, Region III, 1650 Arch Street, Philadelphia, Pennsylvania 19103.

D. *Hand Delivery:* At the previously-listed EPA Region III address. Such deliveries are only accepted during the Docket's normal hours of operation, and special arrangements should be made for deliveries of boxed information.

Instructions: Direct your comments to Docket ID No. EPA–R03–OAR–2010–0143. EPA's policy is that all comments received will be included in the public docket without change, and may be made available online at *www.regulations.gov,* including any personal information provided, unless the comment includes information claimed to be Confidential Business Information (CBI) or other information whose disclosure is restricted by statute. Do not submit information that you consider to be CBI or otherwise protected through *www.regulations.gov* or email. The *www.regulations.gov* Web site is an ''anonymous access'' system, which means EPA will not know your identity or contact information unless you provide it in the body of your comment. If you send an email comment directly to EPA without going through *www.regulations.gov*, your email address will be automatically captured and included as part of the comment that is placed in the public docket and made available on the Internet. If you submit an electronic comment, EPA recommends that you include your name and other contact information in the body of your comment and with any disk or CD–ROM you submit. If EPA cannot read your comment due to technical difficulties and cannot contact you for clarification, EPA may not be able to consider your comment. Electronic files should avoid the use of special characters, any form of encryption, and be free of any defects or viruses.

Docket: All documents in the electronic docket are listed in the *www.regulations.gov* index. Although listed in the index, some information is not publicly available, i.e., CBI or other information whose disclosure is restricted by statute. Certain other material, such as copyrighted material, is not placed on the Internet and will be publicly available only in hard copy form. Publicly available docket materials are available either electronically in *www.regulations.gov* or in hard copy during normal business hours at the Air Protection Division, U.S. Environmental Protection Agency, Region III, 1650 Arch Street, Philadelphia, Pennsylvania 19103. Copies of the State submittal are available at the Maryland Department of the Environment, 1800 Washington Boulevard, Suite 705, Baltimore, Maryland 21230.

FOR FURTHER INFORMATION CONTACT: Asrah Khadr, (215) 814–2071, or by email at *khadr.asrah@epa.gov.*

SUPPLEMENTARY INFORMATION: For further information, please see the information provided in the direct final action, with the same title, that is located in the ''Rules and Regulations'' section of this **Federal Register** publication.

Dated: November 21, 2012.

W.C. Early,

Acting Regional Administrator, Region III.

[FR Doc. 2012–29608 Filed 12–7–12; 8:45 am]

BILLING CODE 6560–50–P

ENVIRONMENTAL PROTECTION AGENCY

40 CFR Part 52

[EPA–R03–OAR–2012–0409; FRL–9759–8]

Approval and Promulgation of Air Quality Implementation Plans; Pennsylvania; Determinations of Attainment of the 1997 8-Hour Ozone Standard for the Pittsburgh-Beaver Valley Moderate Nonattainment Area

AGENCY: Environmental Protection Agency (EPA).

ACTION: Proposed rule.

SUMMARY: EPA is proposing to make two separate and independent determinations regarding the Pittsburgh-Beaver Valley 1997 8-hour ozone nonattainment area (the Pittsburgh Area). First, EPA is proposing to determine that the Pittsburgh Area attained the 1997 8-hour ozone national ambient air quality standard (NAAQS) by the applicable attainment date of June 15, 2010. This proposal is based upon complete, quality assured, and certified ambient air monitoring data for the 2007–2009 monitoring period showing monitored attainment of the 1997 8-hour ozone NAAQS. Second, EPA is proposing to determine that the Pittsburgh Area is attaining the 1997 8-hour ozone NAAQS, based on complete, quality assured, and certified ambient air monitoring data for the 2009–2011 monitoring period, and available preliminary data for 2012. If finalized, this determination would suspend the requirement for the Pittsburgh Area to submit an attainment demonstration, reasonably available control measures (RACM), a reasonable further progress (RFP) plan, and contingency measures related to attainment of the 1997 8-hour ozone NAAQS for so long as the area continues to attain that NAAQS. These determinations do not constitute a redesignation to attainment. The Pittsburgh Area will remain designated nonattainment for the 1997 8-hour ozone NAAQS until such time as EPA determines that the Pittsburgh Area meets the Clean Air Act (CAA) requirements for redesignation to attainment, including an approved maintenance plan. These actions are being taken under the CAA.

DATES: Written comments must be received on or before January 9, 2013.

ADDRESSES: Submit your comments, identified by Docket ID EPA–R03–OAR–2012–0409 by one of the following methods:

A. *www.regulations.gov.* Follow the on-line instructions for submitting comments.

B. *Email: Mastro.donna@epa.gov.*

C. *Mail:* EPA–R03–OAR–2012–0409, Donna Mastro, Acting Associate Director, Office of Air Program Planning, Mailcode 3AP30, U.S. Environmental Protection Agency, Region III, 1650 Arch Street, Philadelphia, Pennsylvania 19103.

D. *Hand Delivery:* At the previously-listed EPA Region III address. Such deliveries are only accepted during the Docket's normal hours of operation, and special arrangements should be made for deliveries of boxed information.

Instructions: Direct your comments to Docket ID No. EPA–R03–OAR–2012–0409. EPA's policy is that all comments received will be included in the public docket without change, and may be made available online at *www.regulations.gov,* including any personal information provided, unless the comment includes information claimed to be Confidential Business Information (CBI) or other information whose disclosure is restricted by statute. Do not submit information that you consider to be CBI or otherwise protected through *www.regulations.gov* or email. The *www.regulations.gov* Web site is an ''anonymous access'' system, which means EPA will not know your identity or contact information unless you provide it in the body of your comment. If you send an email comment directly to EPA without going through *www.regulations.gov,* your email address will be automatically captured and included as part of the comment that is placed in the public docket and made available on the Internet. If you submit an electronic comment, EPA recommends that you include your name and other contact information in the body of your comment and with any disk or CD–ROM you submit. If EPA cannot read your comment due to technical difficulties and cannot contact you for clarification, EPA may not be able to consider your comment. Electronic files should avoid the use of special characters, any form of encryption, and be free of any defects or viruses.

Docket: All documents in the electronic docket are listed in the *www.regulations.gov* index. Although listed in the index, some information is not publicly available, i.e., CBI or other information whose disclosure is restricted by statute. Certain other material, such as copyrighted material, is not placed on the Internet and will be publicly available only in hard copy form. Publicly available docket materials are available either electronically in *www.regulations.gov* or in hard copy during normal business hours at the Air Protection Division, U.S. Environmental Protection Agency, Region III, 1650 Arch Street, Philadelphia, Pennsylvania 19103.

FOR FURTHER INFORMATION CONTACT: Maria A. Pino, (215) 814–2181, or by email at *pino.maria@epa.gov.*

SUPPLEMENTARY INFORMATION: The following outline is provided to aid in locating information in this action.

I. Background
II. Summary of Proposed Actions
III. EPA's Analysis of the Relevant Air Quality Data
IV. Proposed Action
V. Statutory and Executive Order Reviews

I. Background

A. The Pittsburgh Area

In 1997, EPA revised the health-based NAAQS for ozone, setting it at 0.08 parts per million (ppm) averaged over an 8-hour time frame. On April 30, 2004 (69 FR 23951), EPA finalized its attainment/nonattainment designations for areas across the country with respect to the 8-hour ozone standard. These actions became effective on June 15, 2004. Among those nonattainment areas is the Pittsburgh Area, which includes Allegheny, Armstrong, Beaver, Butler, Fayette, Washington, and Westmoreland Counties in Pennsylvania. *See* 40 CFR 81.339.

B. Classification Under Subpart 2

Under the implementation rule for the 1997 8-hour ozone NAAQS, EPA designated certain areas under title I, part D, subpart 1 of the CAA (subpart 1) if they had a 1-hour design value below 0.121 ppm. In June 2004, EPA designated the Pittsburgh Area nonattainment under subpart 1 for the 1997 8-hour ozone NAAQS. In June 2007, the United States Court of Appeals for the District of Columbia Circuit (DC Circuit Court) vacated the portion of the 1997 ozone implementation rule that allowed areas to be designated under subpart 1. On April 27, 2012, EPA finalized revisions to the 2004 rule that specified the first phase of requirements to meet the 1997 8-hour NAAQS (Phase 1 Implementation Rule). The revisions to the Phase 1 Implementation Rule are EPA's response to a December 22, 2006 decision by the DC Circuit Court in *South Coast Air Quality Management Dist.* v. *EPA,* 472 F.3d 882 (DC Cir. 2006) and were effective on June 13, 2012 (77 FR 28424). As a result of this action, the CAA classifications for 16 nonattainment areas, including the Pittsburgh Area, were revised for the 1997 8-hour ozone NAAQS. The areas were originally classified under the more general subpart 1 provisions of the CAA. Through this rulemaking, the areas were classified as marginal or moderate under the ozone-specific subpart 2 provisions of the CAA, depending on their design values at the time of the original designations in April 2004. The Pittsburgh Area was classified as moderate. Moderate areas are required to attain the 1997 8-hour ozone NAAQS by June 15, 2010.

C. Previous Determination of Attainment

Under the provisions of EPA's ozone implementation rule (*see* 40 CFR section 51.918), if EPA issues a determination that an area is attaining the relevant standard (through a rulemaking that includes public notice and comment), it will suspend the area's obligations to submit an attainment demonstration, RACM, RFP, contingency measures, and other planning requirements related to attainment for as long as the area continues to attain. The determination of attainment, also known as a ''clean data'' determination, is not equivalent to a redesignation. The state must still meet the statutory requirements for redesignation in order to be redesignated to attainment.

On May 31, 2011, EPA published a final determination that the Pittsburgh Area had attained the 1997 8-hour ozone NAAQS. (76 FR 31237). That determination was based upon complete, quality assured, and certified ambient air monitoring data that show the Pittsburgh Area has monitored attainment of the 1997 8-hour ozone NAAQS for the 2007 to 2009 monitoring period. In accordance with EPA's applicable ozone implementation rule, that determination suspended the obligation of the Commonwealth of Pennsylvania to submit an attainment demonstration and associated RACM analysis, RFP plan, contingency measures, and other planning requirements related to attainment of the 1997 8-hour ozone NAAQS for the Pittsburgh Area required under subpart 1 of the CAA for as long as the Pittsburgh Area continues to meet the 1997 8-hour ozone NAAQS. That determination of attainment was not equivalent to a redesignation to attainment. The Commonwealth must still meet the statutory requirements for redesignation in order to be redesignated to attainment.

In its May 31, 2011 final rulemaking action, EPA explained that when the Pittsburgh Area was reclassified under subpart 2, EPA would address in a separate rulemaking the consequences

of a determination of attainment for any requirements to which the Pittsburgh Area became subject as a result of its reclassification. If EPA subsequently determined in that rulemaking action that the Pittsburgh Area continued to be in attainment, then the obligation to submit the applicable attainment-related requirements for its new classification would be suspended in accordance with 40 CFR 51.918. (76 FR 76929). As previously discussed, the Pittsburgh Area was reclassified under subpart 2, effective June 13, 2012. Therefore, today's proposed rulemaking addresses the Pittsburgh Area's obligations under its new moderate classification.

D. Requirement To Determine Attainment by the Attainment Date

Under CAA section 181(b)(2), EPA is required to determine whether a nonattainment area attained the 1997 8-hour ozone NAAQS by its applicable attainment date, and to publish that determination in the **Federal Register**. If EPA determines that an area failed to attain the ozone NAAQS by its attainment date, the area is reclassified to a higher classification.

E. Ambient Air Quality Monitoring Data

Complete, quality assured, certified 8-hour ozone air quality monitoring data for the 2007–2009, 2008–2010, and 2009–2011 monitoring periods for the Pittsburgh Area, as recorded in the EPA Air Quality System (AQS) database show that the Pittsburgh Area has attained the 1997 8-hour ozone NAAQS. Preliminary data available to date for 2012 is consistent with continued attainment.

II. Summary of Proposed Actions

These actions do not constitute a redesignation to attainment under section 107(d)(3) of the CAA. The designation status of the Pittsburgh Area will remain nonattainment for the 1997 8-hour ozone NAAQS until such time as EPA determines that the area meets the CAA requirements for redesignation to attainment, including an approved maintenance plan.

A. Determination of Attainment by the Attainment Date

EPA is proposing to make a determination that the Pittsburgh Area attained the 1997 8-hour ozone NAAQS by its applicable attainment date of June 15, 2010. This determination is based upon complete, quality assured and certified ambient air monitoring data for the 2007–2009 monitoring period, which is the last full three-year period prior to the June 15, 2010 attainment date. The 2007–2009 data show that the Pittsburgh Area monitored attainment of the 1997 8-hour ozone NAAQS. The effect of a final determination of attainment by the Pittsburgh Area's attainment date would be to discharge EPA's obligation under CAA section 181(b)(2) to determine, based on the Pittsburgh Area's air quality as of the attainment date, whether the area attained the standard by that date and to establish that the Pittsburgh Area will not be reclassified.

B. "Clean Data" Determination of Attainment

EPA is also proposing to make a determination that the Pittsburgh Area has attained the 1997 8-hour ozone NAAQS. This determination is based upon complete, quality assured and certified ambient air monitoring data that show the Pittsburgh Area has monitored attainment of the 1997 8-hour ozone NAAQS for the 2009–2011 monitoring period. Preliminary data available for 2012 are consistent with continued attainment. Under the provisions of EPA's implementation rule for the 1997 8-hour NAAQS (*see* 40 CFR 51.918), a final determination of attainment would suspend the CAA requirements for the Pittsburgh Area to submit an attainment demonstration and the associated RFP plan, contingency measures, RACM analysis, and any other planning requirements related to attainment of the 1997 8-hour ozone NAAQS required for moderate areas under subpart 2 of the CAA. This suspension would remain in effect until such time, if any, that EPA (i) redesignates the area to attainment at which time those requirements no longer apply, or (ii) subsequently determines, after notice-and-comment rulemaking, that the Pittsburgh Area has violated the 1997 8-hour ozone NAAQS. This final determination would be separate from, and would not influence or otherwise affect, any future designation or requirements for the Pittsburgh Area based on any new or revised ozone NAAQS. It remains in effect regardless of whether EPA designates the Pittsburgh Area as a nonattainment area for purposes of any new or revised ozone NAAQS.

III. EPA's Analysis of the Relevant Air Quality Data

Consistent with the requirements contained in 40 CFR part 50, EPA has reviewed the 8-hour ozone ambient air quality monitoring data for the 2007–2009, 2008–2010, and 2009–2011 monitoring periods for the Pittsburgh Area, as recorded in the AQS database. On the basis of that review, EPA has concluded that the Pittsburgh Area attained the 1997 8-hour ozone NAAQS by its attainment date, based on data for the 2007–2009 monitoring period. EPA has also concluded that the Pittsburgh Area continues to attain, based on data for the 2008–2010 and 2009–2011 monitoring periods. Preliminary 2012 data is consistent with continued attainment.

Under EPA regulations at 40 CFR part 50, the 1997 8-hour ozone standard is attained at a site when the 3-year average of the annual fourth-highest daily maximum 8-hour average ozone concentrations at an ozone monitor is less than or equal to 0.08 ppm (i.e., 0.084 ppm, based on the rounding convention in 40 CFR part 50, appendix I). This 3-year average is referred to as the design value. When the design value is less than or equal to 0.084 ppm at each monitoring site within the area, then the area is meeting the NAAQS.

Also, the data completeness requirement is met when the average percent of days with valid ambient monitoring data is greater than 90%, and no single year has less than 75% data completeness as determined in accordance with appendix I of 40 CFR part 50.

Tables 1, 2, and 3 below show the ozone design values for each monitor in the Pittsburgh Area for the years 2007–2009, 2008–2010, and 2009–2011, respectively. All design values are below 0.084 ppm, and all monitors meet the data completeness requirements. Therefore, EPA finds that the Pittsburgh Area attained the 1997 8-hour ozone NAAQS, considering 2007–2009, 2008–2010, and 2009–2011 data.

TABLE 1—2007–2009 PITTSBURGH AREA 8-HOUR OZONE DESIGN VALUES

County	Monitor ID	2007–2009 Average % data completeness	2007–2009 Design value (ppm)
Allegheny	420030008	99	0.077
	420030010	99	0.074

TABLE 1—2007–2009 PITTSBURGH AREA 8-HOUR OZONE DESIGN VALUES—Continued

County	Monitor ID	2007–2009 Average % data completeness	2007–2009 Design value (ppm)
	420030067	98	0.073
	420031005	97	0.082
Armstrong	420050001	100	0.077
Beaver	420070002	97	0.073
	420070005	97	0.071
	420070014	100	0.073
Washington	421250005	99	0.072
	421250200	100	0.068
	421255001	95	0.072
Westmoreland	421290006	100	0.071
	421290008	99	0.072

TABLE 2—2008–2010 PITTSBURGH AREA 8-HOUR OZONE DESIGN VALUES

County	Monitor ID	2008–2010 Average % data completeness	2008–2010 Design value (ppm)
Allegheny	420030008	98	0.076
	420030010	96	0.071
	420030067	99	0.074
	420031005	99	0.081
Armstrong	420050001	100	0.076
Beaver	420070002	97	0.071
	420070005	96	0.073
	420070014	95	0.071
Washington	421250005	99	0.070
	421250200	99	0.068
	421255001	94	0.071
Westmoreland	421290006	99	0.068
	421290008	98	0.072

TABLE 3—2009–2011 PITTSBURGH AREA 8-HOUR OZONE DESIGN VALUES

County	Monitor ID	2009–2011 Average % data completeness	2009–2011 Design value (ppm)
Allegheny	420030008	98	0.074
	420030010	95	0.071
	420030067	99	0.075
	420031005	99	0.080
Armstrong	420050001	100	0.073
Beaver	420070002	97	0.069
	420070005	98	0.072
	420070014	94	0.071
Washington	421250005	99	0.069
	421250200	99	0.068
	421255001	96	0.069
Westmoreland	421290006	99	0.068
	421290008	98	0.069

In the Technical Support Document (TSD) prepared for this action, EPA has evaluated the air quality data for the Pittsburgh Area. EPA's review of the data indicates that the Pittsburgh Area has met the 1997 8-hour ozone NAAQS. For details, please refer to EPA's TSD, which can be viewed at *http://www.regulations.gov,* Docket ID No. EPA–R03–OAR–2012–0409.

IV. Proposed Actions

EPA is proposing to make two determinations regarding the Pittsburgh Area. First, pursuant to section 181(b)(2)(A) of the CAA, EPA is proposing to determine that the Pittsburgh Area attained the 1997 8-hour ozone NAAQS by its applicable attainment date, June 15, 2010. This proposed determination is based upon complete, quality assured, and certified ambient air monitoring data for the 2007–2009 monitoring period. The effect of a final determination would be that: (i) EPA has met the requirement pursuant to CAA section 181(b)(2)(A) to determine, based on the area's air quality as of the attainment date, whether the area attained the standard; and (ii) the Pittsburgh Area would not be reclassified for failure to attain by its applicable attainment date. Second, EPA is proposing to make a determination that the Pittsburgh Area has attained the 1997 8-hour ozone NAAQS. This proposed ''clean data''

determination is based upon complete, quality assured, and certified ambient air monitoring data that show the area has monitored attainment of the 1997 8-hour ozone NAAQS for the 2009–2011 monitoring period. Available preliminary 2012 data is consistent with continued attainment. Pursuant to 40 CFR 51.918, if this clean data determination is finalized, it would suspend the requirements for the Pittsburgh Area to submit an attainment demonstration and associated RACM, RFP plan, contingency measures, and any other planning requirements related to attainment of the 1997 8-hour ozone NAAQS for so long as the area continues to attain the 1997 8-hour ozone NAAQS.

Finalizing both of these determinations or either of them would not constitute a redesignation of the Pittsburgh Area to attainment for the 1997 8-hour ozone NAAQS under CAA section 107(d)(3). Neither determination of attainment involves approving a maintenance plan for the Pittsburgh Area, nor determines that the Pittsburgh Area has met all the requirements for redesignation under the CAA, including that the attainment be due to permanent and enforceable measures.[1] Therefore, the designation status of the Pittsburgh Area will remain nonattainment for the 1997 8-hour ozone NAAQS until such time as EPA takes final rulemaking action to determine that the Pittsburgh Area meets the CAA requirements for redesignation to attainment. EPA is soliciting public comments on the issues discussed in this document. These comments will be considered before EPA takes final action.

V. Statutory and Executive Order Reviews

This action proposes to make determinations based on air quality, and would, if finalized, result in the suspension of certain federal requirements, and/or would not impose additional requirements beyond those imposed by state law. For that reason, these proposed actions:

- Are not a ''significant regulatory action'' subject to review by the Office of Management and Budget under Executive Order 12866 (58 FR 51735, October 4, 1993);
- Do not impose an information collection burden under the provisions of the Paperwork Reduction Act (44 U.S.C. 3501 *et seq.*);
- Are certified as not having a significant economic impact on a substantial number of small entities under the Regulatory Flexibility Act (5 U.S.C. 601 *et seq.*);
- Do not contain any unfunded mandate or significantly or uniquely affect small governments, as described in the Unfunded Mandates Reform Act of 1995 (Pub. L. 104–4);
- Do not have Federalism implications as specified in Executive Order 13132 (64 FR 43255, August 10, 1999);
- Are not an economically significant regulatory action based on health or safety risks subject to Executive Order 13045 (62 FR 19885, April 23, 1997);
- Are not a significant regulatory action subject to Executive Order 13211 (66 FR 28355, May 22, 2001);
- Are not subject to requirements of Section 12(d) of the National Technology Transfer and Advancement Act of 1995 (15 U.S.C. 272 note) because application of those requirements would be inconsistent with the CAA; and
- Do not provide EPA with the discretionary authority to address, as appropriate, disproportionate human health or environmental effects, using practicable and legally permissible methods, under Executive Order 12898 (59 FR 7629, February 16, 1994).

In addition, these proposed determinations that the Pittsburgh Area attained the 1997 8-hour ozone NAAQS do not have tribal implications as specified by Executive Order 13175 (65 FR 67249, November 9, 2000), because the determinations do not apply in Indian country located in the state, and EPA notes that it will not impose substantial direct costs on tribal governments or preempt tribal law.

List of Subjects in 40 CFR Part 52

Environmental protection, Air pollution control, Ozone, Reporting and recordkeeping requirements.

Dated: November 21, 2012.

W.C. Early,

Acting Regional Administrator, Region III.

[FR Doc. 2012–29790 Filed 12–7–12; 8:45 am]

BILLING CODE 6560–50–P

[1] The monitoring data from the 2007–2009, 2008–2010, and 2009–2011 monitoring periods that is relied on in this notice may be impacted by reductions associated with the Clean Air Interstate Rule (CAIR), which was remanded to EPA in 2008. *North Carolina* v. *EPA,* 531 F.3d 896, *as modified on reh'g,* 550 F.3d 1176 (DC Cir. 2008). Nonetheless, because this action addresses only whether the monitoring data shows attainment, EPA need not address at this time whether such attainment was due to the remanded CAIR.

ENVIRONMENTAL PROTECTION AGENCY

40 CFR Part 52

[EPA–R09–OAR–2012–0732; FRL–9739–4]

Approval of Air Quality Implementation Plans; California; Eastern Kern, Imperial County, Placer County, and Yolo-Solano; Prevention of Significant Deterioration

AGENCY: Environmental Protection Agency (EPA).

ACTION: Proposed rule.

SUMMARY: EPA is proposing approval of revisions to the California State Implementation Plan (SIP) under the Clean Air Act (CAA or Act). EPA is proposing approval of four permitting rules submitted for the Eastern Kern Air Pollution Control District (EKAPCD), Imperial County Air Pollution Control District (ICAPCD), Placer County Air Pollution Control District (PCAPCD), and Yolo-Solano Air Quality Management District (YSAQMD) portions of the California SIP. The State of California is required under Part C of title I of the Act to adopt and implement a SIP-approved Prevention of Significant Deterioration (PSD) permit program. We are proposing to revise the SIP to incorporate EKAPCD Rule 210.4—Prevention of Significant Deterioration, ICAPCD Rule 904—Prevention of Significant Deterioration (PSD) Permit Program, PCAPCD Rule 518—Prevention of Significant Deterioration (PSD) Permit Program, and YSAQMD Rule 3.24—Prevention of Significant Deterioration. The approval of these rules would establish a PSD permit program in each District for pre-construction review of certain new and modified major stationary sources in attainment or unclassifiable areas. We are soliciting comments on this proposal. In the ''Rules'' section of this **Federal Register**, we are approving these California SIP revisions as a direct final rule without a prior proposed rule. If we receive no adverse comment, we will not take further action on this proposed rule. If we receive adverse comment, we will publish a timely withdrawal in the **Federal Register** informing the public that this rule, or the relevant provisions of the rule, will not take effect, and all public comments received will be addressed in any subsequent final rule based on this proposed rule.

DATES: Any comments must be submitted no later than January 9, 2013.

ADDRESSES: Submit comments, identified by docket number EPA–R09–

OAR–2012–0732, by one of the following methods:

1. *Federal eRulemaking Portal: www.regulations.gov.* Follow the on-line instructions.

2. *Email: R9airpermits@epa.gov.*

3. *Mail or deliver:* Gerardo Rios (Air-3), U.S. Environmental Protection Agency Region IX, 75 Hawthorne Street, San Francisco, CA 94105–3901.

Please see the direct final rule which is located in the ''Rules'' section of this **Federal Register** for detailed instructions on how to submit comments.

FOR FURTHER INFORMATION CONTACT: Lisa Beckham, Permits Office (AIR–3), U.S. Environmental Protection Agency, Region IX, (415) 972–3811, *beckham.lisa@epa.gov.*

SUPPLEMENTARY INFORMATION: This document proposes to approve revisions to the California SIP to incorporate EKAPCD Rule 210.4—Prevention of Significant Deterioration, ICAPCD Rule 904—Prevention of Significant Deterioration (PSD) Permit Program, PCAPCD Rule 518—Prevention of Significant Deterioration (PSD) Permit Program, and YSAQMD Rule 3.24—Prevention of Significant Deterioration. The State of California is required under Part C of title I of the Act to adopt and implement a SIP-approved PSD permit program. The approval of these rules would establish a PSD permit program in each District for pre-construction review of certain new and modified major stationary sources in attainment or unclassifiable areas. Because the State of California does not currently have a SIP-approved PSD program within EKAPCD, ICAPCD, PCAPCD, and YSAQMD (referred to hereinafter as the ''Districts''), EPA is currently the PSD permitting authority for each District. Inclusion of these rules into the SIP will transfer PSD permitting authority from EPA to the Districts. EPA will assume the role of overseeing the PSD permitting program within each District.

We have published a direct final rule approving these revisions in the ''Rules'' section of this **Federal Register** because we view this as a noncontroversial action and anticipate no adverse comment. We have explained our reasons for this action and provided detailed information about the action in the preamble to the direct final rule. The regulatory text for this proposal is identical to that for the direct final rule. For additional information, including the regulatory text, see the direct final rule in the ''Rules'' section of this **Federal Register**.

If no adverse comments are received, we will not take further action on this proposed rule. If EPA receives adverse comment, we will publish a timely withdrawal in the **Federal Register** informing the public that this rule will not take effect, and all public comments received will be addressed in any subsequent final rule based on this proposed rule. Please note that if EPA receives adverse comment on a distinct provision of this rule and that provision may be severed from the remainder of the rule, EPA may adopt as final those provisions of the rule that are not the subject of an adverse comment. In such case, EPA would publish a timely withdrawal in the **Federal Register** indicating which provisions we are withdrawing. The provisions that are not withdrawn would then become effective on the date set out in the direct final rule, notwithstanding adverse comment on any other provision.

EPA does not intend to institute a second comment period on this action. Any parties interested in commenting on this action must do so at this time. For further information about commenting on this action, please see the information provided in the **ADDRESSES** section of this document and refer to the direct final rule in the ''Rules'' section of this **Federal Register**.

List of Subjects in 40 CFR Part 52

Environmental protection, Air pollution control, Carbon monoxide, Greenhouse gases, Incorporation by reference, Intergovernmental relations, Lead, Nitrogen dioxide, Ozone, Particulate matter, Reporting and recordkeeping requirements, Sulfur oxides, Volatile organic compounds.

Dated: September 25, 2012.

Jared Blumenfeld,

Regional Administrator, Region IX.

[FR Doc. 2012–29536 Filed 12–7–12; 8:45 am]

BILLING CODE 6560–50–P

ENVIRONMENTAL PROTECTION AGENCY

40 CFR Part 52

[EPA–R09–OAR–2012–0808; FRL–9750–3]

Revisions to the California State Implementation Plan, Monterey Bay Unified Air Pollution Control District

AGENCY: Environmental Protection Agency (EPA).

ACTION: Proposed rule.

SUMMARY: EPA is proposing to approve revisions to the Monterey Bay Unified Air Pollution Control District (MBUAPCD) portion of the California State Implementation Plan (SIP). This revision concerns opacity standards related to multiple pollutants, including particulate matter (PM) emissions from several different types of sources, ranging from fugitive dust to gas turbines. We are proposing to approve a local rule to regulate these emission sources under the Clean Air Act (CAA or the Act).

DATES: Any comments on this proposal must arrive by January 9, 2013.

ADDRESSES: Submit comments, identified by docket number EPA–R09–OAR–2012–0808, by one of the following methods:

1. *Federal eRulemaking Portal: www.regulations.gov.* Follow the on-line instructions.

2. *Email: steckel.andrew@epa.gov.*

3. *Mail or deliver:* Andrew Steckel (Air-4), U.S. Environmental Protection Agency Region IX, 75 Hawthorne Street, San Francisco, CA 94105–3901.

Instructions: All comments will be included in the public docket without change and may be made available online at *www.regulations.gov,* including any personal information provided, unless the comment includes Confidential Business Information (CBI) or other information whose disclosure is restricted by statute. Information that you consider CBI or otherwise protected should be clearly identified as such and should not be submitted through *www.regulations.gov* or email. *www.regulations.gov* is an ''anonymous access'' system, and EPA will not know your identity or contact information unless you provide it in the body of your comment. If you send email directly to EPA, your email address will be automatically captured and included as part of the public comment. If EPA cannot read your comment due to technical difficulties and cannot contact you for clarification, EPA may not be able to consider your comment. Electronic files should avoid the use of special characters, any form of encryption, and be free of any defects or viruses.

Docket: Generally, documents in the docket for this action are available electronically at *www.regulations.gov* and in hard copy at EPA Region IX, 75 Hawthorne Street, San Francisco, California 94105–3901. While all documents in the docket are listed at *www.regulations.gov,* some information may be publicly available only at the hard copy location (e.g., copyrighted material, large maps), and some may not be publicly available in either location (e.g., CBI). To inspect the hard copy materials, please schedule an appointment during normal business hours with the contact listed in the **FOR FURTHER INFORMATION CONTACT** section.

FOR FURTHER INFORMATION CONTACT: Idalia Pérez, EPA Region IX, (415) 972–3248, *perez.idalia@epa.gov.*

SUPPLEMENTARY INFORMATION: This proposal addresses the following local rule: Rule 400, Visible Emissions. In the Rules and Regulations section of this **Federal Register**, we are approving this local rule in a direct final action without prior proposal because we believe these SIP revisions are not controversial. If we receive adverse comments, however, we will publish a timely withdrawal of the direct final rule and address the comments in subsequent action based on this proposed rule.

We do not plan to open a second comment period, so anyone interested in commenting should do so at this time. If we do not receive adverse comments, no further activity is planned. For further information, please see the direct final action.

Dated: October 26, 2012.

Jared Blumenfeld,

Regional Administrator, Region IX.

[FR Doc. 2012–29530 Filed 12–7–12; 8:45 am]

BILLING CODE 6560–50–P

DEPARTMENT OF HOMELAND SECURITY

Federal Emergency Management Agency

44 CFR Part 67

[Docket ID FEMA–2010–0003; Internal Agency Docket No. FEMA–B–1085]

Proposed Flood Elevation Determinations

AGENCY: Federal Emergency Management Agency, DHS.

ACTION: Proposed rule; correction.

SUMMARY: On February 5, 2010, FEMA published in the **Federal Register** a proposed rule that contained an erroneous table. This notice provides corrections to that table, to be used in lieu of the information published at 75 FR 5909. The table provided here represents the flooding source, location of referenced elevations, effective and modified elevations, and community affected for Ballard County, Kentucky, and Incorporated Areas. Specifically, it addresses the following flooding sources: Cane Creek (backwater effects from Mississippi, Hazel Creek (backwater effects from Ohio River), Humphrey Creek (backwater effects from Ohio River), Humphrey Creek Tributary 9 (backwater effects from Ohio River), Lucy Creek (backwater effects from Ohio River), Mississippi River, Ohio River, and Stovall Creek (backwater effects from Mississippi River.

DATES: Comments are to be submitted on or before March 11, 2013.

ADDRESSES: You may submit comments, identified by Docket No. FEMA–B–1085, to Luis Rodriguez, Chief, Engineering Management Branch, Federal Insurance and Mitigation Administration, Federal Emergency Management Agency, 500 C Street SW., Washington, DC 20472, (202) 646–4064 or (email) *Luis.Rodriguez3@fema.dhs.gov.*

FOR FURTHER INFORMATION CONTACT: Luis Rodriguez, Chief, Engineering Management Branch, Federal Insurance and Mitigation Administration, Federal Emergency Management Agency, 500 C Street SW., Washington, DC 20472, (202) 646–4064 or (email) *Luis.Rodriguez3@fema.dhs.gov.*

SUPPLEMENTARY INFORMATION: The Federal Emergency Management Agency (FEMA) publishes proposed determinations of Base (1% annual-chance) Flood Elevations (BFEs) and modified BFEs for communities participating in the National Flood Insurance Program (NFIP), in accordance with section 110 of the Flood Disaster Protection Act of 1973, 42 U.S.C. 4104, and 44 CFR 67.4(a).

These proposed BFEs and modified BFEs, together with the floodplain management criteria required by 44 CFR 60.3, are minimum requirements. They should not be construed to mean that the community must change any existing ordinances that are more stringent in their floodplain management requirements. The community may at any time enact stricter requirements of its own or pursuant to policies established by other Federal, State, or regional entities. These proposed elevations are used to meet the floodplain management requirements of the NFIP and also are used to calculate the appropriate flood insurance premium rates for new buildings built after these elevations are made final, and for the contents in those buildings.

Corrections

In the proposed rule published at 75 FR 5909, in the February 5, 2010, issue of the **Federal Register**, FEMA published a table under the authority of 44 CFR 67.4. The table, entitled ''Ballard County, Kentucky, and Incorporated Areas'' addressed the following flooding sources: Cane Creek (backwater effects from Mississippi, Hazel Creek (backwater effects from Ohio River), Humphrey Creek (backwater effects from Ohio River), Humphrey Creek Tributary 9 (backwater effects from Ohio River), Lucy Creek (backwater effects from Ohio River), Mississippi River, Ohio River, and Stovall Creek (backwater effects from Mississippi River. That table contained inaccurate information as to the communities affected for the flooding source the Mississippi River. In this notice, FEMA is publishing a table containing the accurate information, to address these prior errors. The information provided below should be used in lieu of that previously published.

Flooding source(s)	Location of referenced elevation **	* Elevation in feet (NGVD) + Elevation in feet (NAVD) #Depth in feet above ground ∧ Elevation in meters (MSL)		Communities affected
		Effective	Modified	
Ballard County, Kentucky and Incorporated Areas				
Cane Creek (backwater effects from Mississippi River).	From the confluence with Shawnee Creek Slough to approximately 2.3 miles upstream of confluence with Shawnee Creek Slough.	+331	+330	Unincorporated Areas of Ballard County.
Hazel Creek (backwater effects from Ohio River).	From the confluence with Brushy Pond Creek to approximately 3.2 miles upstream of the confluence with Brushy Pond Creek.	+332	+331	Unincorporated Areas of Ballard County.

Flooding source(s)	Location of referenced elevation **	* Elevation in feet (NGVD) + Elevation in feet (NAVD) #Depth in feet above ground ∧ Elevation in meters (MSL)		Communities affected
		Effective	Modified	
Humphrey Creek (backwater effects from Ohio River.	From the confluence with Lucy Creek to approximately 2,007 feet upstream of the confluence with Lucy Creek.	+332	+331	Unincorporated Areas of Ballard County.
Humphrey Creek Tributary 9 (backwater effects from Ohio River).	From the confluence with Humphrey Creek to approximately 1,320 feet upstream of the confluence with Humphrey Creek.	+332	+331	Unincorporated Areas of Ballard County.
Lucy Creek (backwater effects from Ohio River).	From the confluence with Humphrey Creek to approximately 0.45 mile upstream of the confluence with Humphrey Creek.	+332	+331	Unincorporated Areas of Ballard County.
Mississippi River	Approximately 3.5 miles downstream of the confluence with the Ohio River.	+330	+329	City of Wickliffe, Unincorporated Areas of Ballard County.
	Approximately 0.5 mile upstream of the confluence with the Ohio River.	+331	+330	
Ohio River	Approximately 3.0 miles upstream of the confluence with the Mississippi River.	+331	+330	Unincorporated Areas of Ballard County.
	Approximately 6.3 miles upstream of Lock and Dam 53.	+335	+334	
Stovall Creek (backwater effects from Mississippi River).	From the confluence with the Mississippi River to approximately 1 mile upstream of Mayfield Road.	+330	+329	Unincorporated Areas of Ballard County.

* National Geodetic Vertical Datum.
+ North American Vertical Datum.
# Depth in feet above ground.
∧ Mean Sea Level, rounded to the nearest 0.1 meter.
** BFEs to be changed include the listed downstream and upstream BFEs, and include BFEs located on the stream reach between the referenced locations above. Please refer to the revised Flood Insurance Rate Map located at the community map repository (see below) for exact locations of all BFEs to be changed.

Send comments to Luis Rodriguez, Chief, Engineering Management Branch, Federal Insurance and Mitigation Administration, Federal Emergency Management Agency, 500 C Street SW., Washington, DC 20472.

ADDRESSES

City of Wickliffe

Maps are available for inspection at 321 Court Street, Wickliffe, KY 42087.

Unincorporated Areas of Ballard County

Maps are available for inspection at 134 North 4th Street, Wickliffe, KY 42087.

(Catalog of Federal Domestic Assistance No. 97.022, ''Flood Insurance.'')

Dated: November 8, 2012.

James A. Walke,

Acting Deputy Associate Administrator for Mitigation, Department of Homeland Security, Federal Emergency Management Agency.

[FR Doc. 2012–29698 Filed 12–7–12; 8:45 am]

BILLING CODE 9110–12–P

DEPARTMENT OF HOMELAND SECURITY

Federal Emergency Management Agency

44 CFR Part 67

[Docket ID FEMA–2010–0003; Internal Agency Docket No. FEMA–B–1127]

Proposed Flood Elevation Determinations

AGENCY: Federal Emergency Management Agency, DHS.

ACTION: Proposed rule; correction.

SUMMARY: On September 13, 2010, FEMA published in the **Federal Register** a proposed rule that contained an erroneous table. This notice provides corrections to that table, to be used in lieu of the information published at 75 FR 55515. The table provided here represents the flooding sources, location of referenced elevations, effective and modified elevations, and communities affected for Mercer County, Pennsylvania (All Jurisdictions). Specifically, it addresses the following flooding sources: Baker Run, Little Shenango River, Munnell Run, Neshannock Creek, Otter Creek, Sawmill Run, Shenango River, and Wolf Creek.

DATES: Comments are to be submitted on or before March 11, 2013.

ADDRESSES: You may submit comments, identified by Docket No. FEMA–B–1127, to Luis Rodriguez, Chief, Engineering Management Branch, Federal Insurance and Mitigation Administration, Federal Emergency Management Agency, 500 C Street SW., Washington, DC 20472, (202) 646–4064 or (email) *Luis.Rodriguez3@fema.dhs.gov.*

FOR FURTHER INFORMATION CONTACT: Luis Rodriguez, Chief, Engineering Management Branch, Federal Insurance and Mitigation Administration, Federal Emergency Management Agency, 500 C Street SW., Washington, DC 20472, (202) 646–4064 or (email) *Luis.Rodriguez3@fema.dhs.gov.*

SUPPLEMENTARY INFORMATION: The Federal Emergency Management Agency (FEMA) publishes proposed determinations of Base (1% annual-chance) Flood Elevations (BFEs) and modified BFEs for communities participating in the National Flood Insurance Program (NFIP), in accordance with section 110 of the Flood Disaster Protection Act of 1973, 42 U.S.C. 4104, and 44 CFR 67.4(a).

These proposed BFEs and modified BFEs, together with the floodplain management criteria required by 44 CFR 60.3, are minimum requirements. They should not be construed to mean that the community must change any existing ordinances that are more stringent in their floodplain management requirements. The community may at any time enact stricter requirements of its own or pursuant to policies established by other Federal, State, or regional entities. These proposed elevations are used to meet the floodplain management requirements of the NFIP and also are used to calculate the appropriate flood insurance premium rates for new buildings built after these elevations are made final, and for the contents in those buildings.

Corrections

In the proposed rule published at 75 FR 55515, in the September 13, 2010, issue of the **Federal Register**, FEMA published a table under the authority of 44 CFR 67.4. The table, entitled ''Mercer County, Pennsylvania (All Jurisdictions)'' addressed the following flooding sources: Baker Run, Little Shenango River, Munnell Run, Neshannock Creek, Otter Creek, Sawmill Run, Shenango River, and Wolf Creek. That table contained inaccurate information as to the location of referenced elevation, effective and modified elevation in feet, and/or communities affected for the flooding source, the Shenango River. FEMA is publishing a table containing the accurate information, to address these prior errors. The information provided below should be used in lieu of that previously published.

Flooding source(s)	Location of referenced elevation **	* Elevation in feet (NGVD) +Elevation in feet (NAVD) # Depth in feet above ground ∧ Elevation in meters (MSL)		Communities affected
		Effective	Modified	
Mercer County, Pennsylvania (All Jurisdictions)				
Baker Run	Approximately 55 feet upstream of Highland Road	None	+1114	City of Sharon.
	Approximately 30 feet downstream of Richmond Drive	None	+1117	
Little Shenango River	Approximately 0.94 mile downstream of the confluence with Little Shenango River Tributary 1.	None	+968	Township of Sugar Grove.
	Approximately 0.9 mile downstream of the confluence with Little Shenango River Tributary 1.	None	+968	
Munnell Run	Approximately 0.31 mile upstream of Home Street	None	+1125	Township of Findley.
	Approximately 0.21 mile downstream of Franklin Street.	None	+1131	
Neshannock Creek	Approximately 425 feet downstream of the intersection of Plantation Drive and Cypress Lane.	None	+1093	Township of Findley.
	Approximately 0.3 mile upstream of the intersection of Schaffer Road and Grove City Road.	None	+1095	
Otter Creek	Approximately 0.28 mile upstream of the confluence with Munnell Run.	None	+1099	Township of Findley.
	Approximately 0.3 mile upstream of the confluence with Munnell Run.	None	+1099	
Sawmill Run	Approximately 0.35 mile upstream of the confluence with Sawmill Run Tributary 1.	None	+1164	Township of Sandy Lake.
	Approximately 0.46 mile upstream of the confluence with Sawmill Run Tributary 1.	None	+1165	
Sawmill Run	Approximately 0.23 mile downstream of Franklin Street (just below Maple Street).	None	+1167	Borough of Stoneboro.
	Approximately 305 feet upstream of Franklin Street	None	+1167	
Shenango River	Approximately 690 feet upstream of the confluence with Big Run No. 1.	None	+930	Borough of Greenville, Township of West Salem.
	Approximately 295 feet upstream of the intersection of Clinton Street and Canal Street.	None	+943	
Shenango River	Approximately 275 feet upstream of the confluence with Shenango River Tributary 3.	None	+835	Municipality of Hermitage.
	Approximately 490 feet downstream of the confluence with Little Yankee Run.	None	+845	
	Just downstream of Clark Street	None	+856	
	Approximately 820 feet upstream of the confluence with Big Run No. 2.	None	+859	
Shenango River	Approximately 2,400 feet upstream of I–80	+832	+833	Township of Shenango.
	Approximately 1.1 miles upstream of I–80	+832	+833	
Shenango River	Approximately 645 feet downstream of Sieg Hill Road	None	+833	Township of Wheatland.
	Approximately 1,000 upstream of Sieg Hill Road	None	+834	

Flooding source(s)	Location of referenced elevation **	* Elevation in feet (NGVD) + Elevation in feet (NAVD) # Depth in feet above ground ∧ Elevation in meters (MSL)		Communities affected
		Effective	Modified	
Shenango River	Approximately 0.34 mile upstream of the confluence with the Little Shenango River.	None	+ 949	Township of West Salem.
	Approximately 200 feet downstream of Porter Road	None	+ 951	
Wolf Creek	Approximately 0.21 mile upstream of the confluence with Barmore Run.	None	+ 1220	Township of Pine.
	Approximately 0.34 mile downstream of the intersection of Craig Street and Garden Avenue.	None	+ 1226	
	Approximately 0.2 mile downstream of the intersection of Craig Street and Garden Avenue.	None	+ 1226	
	Approximately 0.38 mile downstream of State Route 58 (Main Street).	None	+ 1226	
	Approximately 0.22 mile downstream of the confluence with Black Run.	None	+ 1245	
	Approximately 0.21 mile downstream of the confluence with Black Run.	None	+ 1245	

* National Geodetic Vertical Datum.
+ North American Vertical Datum.
# Depth in feet above ground.
∧ Mean Sea Level, rounded to the nearest 0.1 meter.
** BFEs to be changed include the listed downstream and upstream BFEs, and include BFEs located on the stream reach between the referenced locations above. Please refer to the revised Flood Insurance Rate Map located at the community map repository (see below) for exact locations of all BFEs to be changed.

Send comments to Luis Rodriguez, Chief, Engineering Management Branch, Federal Insurance and Mitigation Administration, Federal Emergency Management Agency, 500 C Street SW., Washington, DC 20472.

ADDRESSES

Borough of Greenville
Maps are available for inspection at 125 Main Street, Greenville, PA 16125.
Borough of Stoneboro
Maps are available for inspection at 59 Lake Street, Stoneboro, PA 16153.
City of Sharon
Maps are available for inspection at the Municipal Building, 155 West Connelly Boulevard, Sharon, PA 16146.
Municipality of Hermitage
Maps are available for inspection at City Hall, 800 North Hermitage Road, Hermitage, PA 16148.
Township of Findley
Maps are available for inspection at the Findley Township Building, 369 McClelland Road, Mercer, PA 16137.
Township of Pine
Maps are available for inspection at the Pine Township Building, 545 Barkeyville Road, Grove City, PA 16127.
Township of Sandy Lake
Maps are available for inspection at the Township Building, 3271 South Main Street, Sandy Lake, PA 16145.
Township of Shenango
Maps are available for inspection at the Shenango Township Building, 3439 Hubbard-West Middlesex Road, West Middlesex, PA 16159.
Township of Sugar Grove
Maps are available for inspection at 359 Groover Road, Greenville, PA 16125.
Township of West Salem
Maps are available for inspection at the West Salem Township Building, 610 Vernan Road, Greenville, PA 16125.
Township of Wheatland
Maps are available for inspection at the Wheatland Township Building, 739 Kilgore Road, Jackson Center, PA 16133.

(Catalog of Federal Domestic Assistance No. 97.022, ''Flood Insurance.'')

Dated: November 8, 2012.

James A. Walke,

Acting Deputy Associate Administrator for Mitigation, Department of Homeland Security, Federal Emergency Management Agency.

[FR Doc. 2012–29682 Filed 12–7–12; 8:45 am]

BILLING CODE 9110–12–P

DEPARTMENT OF HOMELAND SECURITY

Federal Emergency Management Agency

44 CFR Part 67

[Docket ID FEMA–2010–0003; Internal Agency Docket No. FEMA–B–1089]

Proposed Flood Elevation Determinations

AGENCY: Federal Emergency Management Agency, DHS.

ACTION: Proposed rule; correction.

SUMMARY: On May 25, 2010, FEMA published in the **Federal Register** a proposed rule that contained an erroneous table. This notice provides corrections to that table, to be used in lieu of the information published at 75 FR 29219. The table provided here represents the flooding sources, location of referenced elevations, effective and modified elevations, and communities affected for Scott County, Kentucky, and Incorporated Areas. Specifically, it addresses the following flooding

sources: Dry Run, Dry Run Tributary 1 (backwater effects from Dry Run), Hall Branch (backwater effects from Eagle Creek), Lane Run, McCracken Creek (backwater effects from North Elkhorn Creek), Royal Springs Creek (backwater effects from North Elkhorn Creek), South Elkhorn Creek, Spoon Branch (backwater effects from Eagle Creek), and Town Branch (backwater effects from South Elkhorn Creek).

DATES: Comments are to be submitted on or before March 11, 2013.

ADDRESSES: You may submit comments, identified by Docket No. FEMA–B–1089, to Luis Rodriguez, Chief, Engineering Management Branch, Federal Insurance and Mitigation Administration, Federal Emergency Management Agency, 500 C Street SW., Washington, DC 20472, (202) 646–4064 or (email) *Luis.Rodriguez3@fema.dhs.gov*.

FOR FURTHER INFORMATION CONTACT: Luis Rodriguez, Chief, Engineering Management Branch, Federal Insurance and Mitigation Administration, Federal Emergency Management Agency, 500 C Street SW., Washington, DC 20472, (202) 646–4064 or (email) *Luis.Rodriguez3@fema.dhs.gov*.

SUPPLEMENTARY INFORMATION: The Federal Emergency Management Agency (FEMA) publishes proposed determinations of Base (1% annual-chance) Flood Elevations (BFEs) and modified BFEs for communities participating in the National Flood Insurance Program (NFIP), in accordance with section 110 of the Flood Disaster Protection Act of 1973, 42 U.S.C. 4104, and 44 CFR 67.4(a).

These proposed BFEs and modified BFEs, together with the floodplain management criteria required by 44 CFR 60.3, are minimum requirements. They should not be construed to mean that the community must change any existing ordinances that are more stringent in their floodplain management requirements. The community may at any time enact stricter requirements of its own or pursuant to policies established by other Federal, State, or regional entities. These proposed elevations are used to meet the floodplain management requirements of the NFIP and also are used to calculate the appropriate flood insurance premium rates for new buildings built after these elevations are made final, and for the contents in those buildings.

Corrections

In the proposed rule published at 75 FR 29219, in the May 25, 2010, issue of the **Federal Register**, FEMA published a table under the authority of 44 CFR 67.4. The table, entitled ''Scott County, Kentucky, and Incorporated Areas'' addressed the following flooding sources: Dry Run, Dry Run Tributary 1 (backwater effects from Dry Run), Hall Branch (backwater effects from Eagle Creek), Lane Run, McCracken Creek (backwater effects from North Elkhorn Creek), Royal Springs Creek (backwater effects from North Elkhorn Creek), South Elkhorn Creek, Spoon Branch (backwater effects from Eagle Creek), and Town Branch (backwater effects from South Elkhorn Creek). That table contained inaccurate information as to the affected communities for the flooding source Spoon Branch (backwater effects from Eagle Creek). In this notice, FEMA is publishing a table containing the accurate information, to address these prior errors. The information provided below should be used in lieu of that previously published.

Flooding source(s)	Location of referenced elevation	* Elevation in feet (NGVD) + Elevation in feet (NAVD) # Depth in feet above ground ∧ Elevation in meters (MSL)		Communities affected
		Effective	Modified	
Scott County, Kentucky, and Incorporated Areas				
Dry Run	Approximately 0.5 mile upstream of the North Elkhorn Creek confluence.	+800	+801	City of Georgetown, Unincorporated Areas of Scott County.
	Approximately 1.2 miles upstream of Burton Pike	None	+880	
Dry Run Tributary 1 (backwater effects from Dry Run).	From the Dry Run confluence to approximately 0.3 mile downstream of I–75.	None	+828	Unincorporated Areas of Scott County.
Hall Branch (backwater effects from Eagle Creek).	From the Eagle Creek confluence to approximately 0.3 mile upstream of Hinton-Sadieville Road.	None	+780	Unincorporated Areas of Scott County.
Lane Run	At the North Elkhorn Creek confluence	+812	+811	City of Georgetown, Unincorporated Areas of Scott County.
	Approximately 850 feet upstream of Delaplain Road.	None	+889	
McCracken Creek (backwater effects from North Elkhorn Creek).	From the North Elkhorn Creek confluence to approximately 269 feet downstream of the McCracken Creek Tributary 2 confluence.	None	+782	City of Georgetown, Unincorporated Areas of Scott County.
Royal Springs Creek (backwater effects from North Elkhorn Creek).	From the North Elkhorn Creek confluence to approximately 0.4 mile upstream of Paddler Lane.	None	+798	City of Georgetown, Unincorporated Areas of Scott County.
South Elkhorn Creek	Just downstream of South Weisenberger Mill Road.	None	+813	Unincorporated Areas of Scott County.
	At the Town Branch confluence	None	+816	
Spoon Branch (backwater effects from Eagle Creek).	From the Eagle Creek confluence to approximately 783 feet upstream of Sadieville Road.	None	+778	City of Sadieville, Unincorporated Areas of Scott County.

Flooding source(s)	Location of referenced elevation	* Elevation in feet (NGVD) + Elevation in feet (NAVD) # Depth in feet above ground ∧ Elevation in meters (MSL)		Communities affected
		Effective	Modified	
Town Branch (backwater effects from South Elkhorn Creek).	From the South Elkhorn Creek confluence to approximately 0.4 mile upstream of the South Elkhorn Creek confluence.	None	+816	Unincorporated Areas of Scott County.

* National Geodetic Vertical Datum.
+ North American Vertical Datum.
# Depth in feet above ground.
∧ Mean Sea Level, rounded to the nearest 0.1 meter.

** BFEs to be changed include the listed downstream and upstream BFEs, and include BFEs located on the stream reach between the referenced locations above. Please refer to the revised Flood Insurance Rate Map located at the community map repository (see below) for exact locations of all BFEs to be changed.

Send comments to Luis Rodriguez, Chief, Engineering Management Branch, Federal Insurance and Mitigation Administration, Federal Emergency Management Agency, 500 C Street SW., Washington, DC 20472.

ADDRESSES

City of Georgetown
Maps are available for inspection at City Hall, 100 Court Street, Georgetown, KY 40324.
City of Sadieville
Maps are available for inspection at City Hall, 605 Pike Street, Sadieville, KY 40370.

Unincorporated Areas of Scott County

Maps are available for inspection at 100 East Main Street, Georgetown, KY 40324.

(Catalog of Federal Domestic Assistance No. 97.022, ''Flood Insurance.'')

Dated: November 8, 2012.

James A. Walke,

Acting Deputy Associate Administrator for Mitigation, Department of Homeland Security, Federal Emergency Management Agency.

[FR Doc. 2012–29699 Filed 12–7–12; 8:45 am]

BILLING CODE 9110–12–P

DEPARTMENT OF HOMELAND SECURITY

Federal Emergency Management Agency

44 CFR Part 67

[Docket ID FEMA–2010–0003; Internal Agency Docket No. FEMA–B–1085]

Proposed Flood Elevation Determinations

AGENCY: Federal Emergency Management Agency, DHS.

ACTION: Proposed rule; correction.

SUMMARY: On February 5, 2010, FEMA published in the **Federal Register** a proposed rule that contained an erroneous table. This notice provides corrections to that table, to be used in lieu of the information published at 75 FR 5909. The table provided here represents the flooding sources, location of referenced elevations, effective and modified elevations, and communities affected for Webster County, Kentucky, and Incorporated Areas. Specifically, it addresses the following flooding sources: Bailey Ditch (backwater effects from Green River), Deer Creek (backwater effects from Green River), East Fork Deer Creek Tributary 1 (backwater effects from Green River), Green River, Green River Tributary 219 (backwater effects from Green River), Groves Creek (backwater effects from Green River), Knoblick Creek (backwater effects from Green River), Mock Roy Creek (backwater effects from Green River), and Pitman Creek (backwater effects from Green River).

DATES: Comments are to be submitted on or before March 11, 2013.

ADDRESSES: You may submit comments, identified by Docket No. FEMA–B–1085, to Luis Rodriguez, Chief, Engineering Management Branch, Federal Insurance and Mitigation Administration, Federal Emergency Management Agency, 500 C Street SW., Washington, DC 20472, (202) 646–4064 or (email) *Luis.Rodriguez3@fema.dhs.gov.*

FOR FURTHER INFORMATION CONTACT: Luis Rodriguez, Chief, Engineering Management Branch, Federal Insurance and Mitigation Administration, Federal Emergency Management Agency, 500 C Street SW., Washington, DC 20472, (202) 646–4064 or (email) *Luis.Rodriguez3@fema.dhs.gov.*

SUPPLEMENTARY INFORMATION: The Federal Emergency Management Agency (FEMA) publishes proposed determinations of Base (1% annual-chance) Flood Elevations (BFEs) and modified BFEs for communities participating in the National Flood Insurance Program (NFIP), in accordance with section 110 of the Flood Disaster Protection Act of 1973, 42 U.S.C. 4104, and 44 CFR 67.4(a).

These proposed BFEs and modified BFEs, together with the floodplain management criteria required by 44 CFR 60.3, are minimum requirements. They should not be construed to mean that the community must change any existing ordinances that are more stringent in their floodplain management requirements. The community may at any time enact stricter requirements of its own or pursuant to policies established by other Federal, State, or regional entities. These proposed elevations are used to meet the floodplain management requirements of the NFIP and also are used to calculate the appropriate flood insurance premium rates for new buildings built after these elevations are made final, and for the contents in those buildings.

Corrections

In the proposed rule published at 75 FR 5909, in the February 5, 2010, issue of the **Federal Register**, FEMA published a table under the authority of 44 CFR 67.4. The table, entitled ''Webster County, Kentucky, and Incorporated Areas'' addressed the following flooding sources: Bailey Ditch (backwater effects from Green River), Deer Creek (backwater effects from Green River), East Fork Deer Creek Tributary 1 (backwater effects from Green River), Green River, Green River

Tributary 219 (backwater effects from Green River), Groves Creek (backwater effects from Green River), Knoblick Creek (backwater effects from Green River), Mock Roy Creek (backwater effects from Green River), and Pitman Creek (backwater effects from Green River). That table contained inaccurate information as to the communities affected for the flooding sources Green River and Mock Roy Creek (backwater effects from Green River). In this notice, FEMA is publishing a table containing the accurate information to address these prior errors. The information provided below should be used in lieu of that previously published.

Flooding source(s)	Location of referenced elevation	* Elevation in feet (NGVD) + Elevation in feet (NAVD) # Depth in feet above ground ∧ Elevation in meters (MSL)		Communities affected
		Effective	Modified	
Webster County, Kentucky, and Incorporated Areas				
Bailey Ditch (backwater effects from Green River).	From the confluence with Knoblick Creek to approximately 0.93 mile upstream of the confluence with Knoblick Creek.	None	+387	Unincorporated Areas of Webster County.
Deer Creek (backwater effects from Green River).	From the confluence with East Fork Deer Creek to approximately 1.5 miles upstream of the confluence with East Fork Deer Creek.	None	+387	Unincorporated Areas of Webster County.
East Fork Deer Creek Tributary 1 (backwater effects from Green River).	From the confluence with Deer Creek to approximately 2.7 miles upstream of the confluence with Deer Creek.	None	+387	Unincorporated Areas of Webster County.
Green River	At approximately 1.5 miles downstream of the confluence with Groves Creek.	None	+386	City of Sebree, Unincorporated Areas of Webster County.
	At approximately 5.2 miles upstream of the confluence with Deer Creek.	None	+388	
Green River Tributary 219 (backwater effects from Green River).	From the confluence with the Green River to approximately 1.5 miles upstream of the confluence with the Green River.	None	+387	Unincorporated Areas of Webster County.
Groves Creek (backwater effects from Green River).	From the confluence with the Green River to approximately 5.9 miles upstream of the confluence with the Green River.	None	+386	Unincorporated Areas of Webster County.
Knoblick Creek (backwater effects from Green River).	From the confluence with Deer Creek to approximately 2.8 miles upstream of the confluence with Deer Creek.	None	+387	Unincorporated Areas of Webster County.
Mock Roy Creek (backwater effects from Green River).	From the confluence with the Green River to approximately 2.5 miles upstream of the confluence with the Green River.	None	+386	City of Sebree, Unincorporated Areas of Webster County.
Pitman Creek (backwater effects from Green River).	Approximately 1,690 feet upstream of KY–370 ...	None	+388	Unincorporated Areas of Webster County.
	At approximately 3.8 miles upstream of the confluence with the Green River.	None	+388	

*National Geodetic Vertical Datum.
+North American Vertical Datum.
#Depth in feet above ground.
∧Mean Sea Level, rounded to the nearest 0.1 meter.
** BFEs to be changed include the listed downstream and upstream BFEs, and include BFEs located on the stream reach between the referenced locations above. Please refer to the revised Flood Insurance Rate Map located at the community map repository (see below) for exact locations of all BFEs to be changed.

Send comments to Luis Rodriguez, Chief, Engineering Management Branch, Federal Insurance and Mitigation Administration, Federal Emergency Management Agency, 500 C Street SW., Washington, DC 20472.

ADDRESSES

City of Sebree

Maps are available for inspection at 36 South Spring Street, Sebree, KY 42455.

Unincorporated Areas of Webster County

Maps are available for inspection at 35 South U.S. Route 41A, Dixon, KY

(Catalog of Federal Domestic Assistance No. 97.022, ''Flood Insurance.'')

Dated: November 8, 2012.

James A. Walke,

Acting Deputy Associate Administrator for Mitigation, Department of Homeland Security, Federal Emergency Management Agency.

[FR Doc. 2012–29684 Filed 12–7–12; 8:45 am]

BILLING CODE 9110–12–P

Notices

Federal Register
Vol. 77, No. 237
Monday, December 10, 2012

This section of the FEDERAL REGISTER contains documents other than rules or proposed rules that are applicable to the public. Notices of hearings and investigations, committee meetings, agency decisions and rulings, delegations of authority, filing of petitions and applications and agency statements of organization and functions are examples of documents appearing in this section.

DEPARTMENT OF AGRICULTURE

Food Safety and Inspection Service

[Docket No. FSIS–2005–0044]

Not Applying the Mark of Inspection Pending Certain Test Results

AGENCY: Food Safety and Inspection Service, USDA.

ACTION: Notice; final policy statement.

SUMMARY: The Food Safety and Inspection Service (FSIS) is announcing that it is changing its procedures and will withhold its determination as to whether meat and poultry products are not adulterated, and thus eligible to enter commerce, until all test results that bear on the determination have been received. This notice responds to the comments FSIS received on the **Federal Register** notice it issued on April 11, 2011, which announced the Agency's intention to implement this policy, and explains how this policy will apply to domestic and imported product. FSIS did not make any changes to the policy that it announced.

DATES: Effective February 8, 2013.

FOR FURTHER INFORMATION CONTACT: Rachel Edelstein, Assistant Administrator, Office of Policy and Program Development, FSIS, U.S. Department of Agriculture, 1400 Independence Avenue SW., Washington, DC 20250–3700, telephone: (202) 205–0495.

SUPPLEMENTARY INFORMATION:

Background

FSIS is responsible for protecting the nation's meat and poultry supply by making sure that it is safe, wholesome, not adulterated, and properly marked, labeled and packaged. FSIS administers the Federal Meat Inspection Act (FMIA) (21 U.S.C. 601 *et. seq.*) and the Poultry Products Inspection Act (PPIA) (21 U.S.C. 451 *et. seq.*) (the Acts). These statutes prohibit anyone from selling, transporting, offering for sale or transportation, or receiving for transportation in commerce, any adulterated or misbranded meat or poultry products (21 U.S.C. 610 and 458).

On April 11, 2011, FSIS published the notice in the **Federal Register**, ''Not Applying the Mark of Inspection Pending Certain Test Results'' (76 FR 19952). The notice explained that the Agency's practice has been to allow products tested for adulterants to bear the mark of inspection, and to enter commerce, even when test results have not been received. FSIS has asked, but had not required, official establishments to maintain control of products tested for adulterants pending test results. The notice stated that because establishments, including official import inspection establishments, were not consistently maintaining control of product, despite FSIS's request that they do so, adulterated product was entering commerce. In the April 11, 2011, notice, FSIS announced its tentative determination not to apply the mark of inspection until negative results are available and received for any testing for adulterants conducted by the Agency.

In the notice, FSIS stated that the policy would cover non-intact raw beef product or intact raw beef product intended for non-intact use that is tested for *Escheriachia coli* O157:H7 (*E. coli* O157:H7). Also, FSIS explained the policy would cover any ready-to-eat products tested for *Listeria monocytogenes, E. coli* O157:H7, or *Salmonella.* Similarly, FSIS stated that the policy would cover ready-to-eat product that passed over food contact surfaces that have been tested for the presence of *Listeria monocytogenes* and *Salmonella,* pending receipt of negative test results. In the notice, FSIS stated that the policy would not cover raw meat or poultry products tested for *Salmonella* or other pathogens that FSIS has not designated as adulterants in those products.

In the notice, FSIS stated that the policy would also apply to livestock carcasses subject to FSIS testing for veterinary drugs such as antibiotics, sulfonamides, or avermectins or the feed additive carbadox. FSIS also explained that because of the significant number of poultry carcasses in a lot, the economic effect of holding such a lot, and because, historically, FSIS has not seen residue problems in poultry tested for residues, such product would not need to be held from commerce pending negative test results (76 FR 19955).

Comments and FSIS Response

FSIS received 26 comments in response to the notice from industry, domestic and foreign trade organizations, consumer groups, foreign government, and individuals, including FSIS personnel. Commenters supported effective procedures to prevent adulterated product from entering commerce. However, many comments from industry, foreign trade organizations, and foreign governments raised concern about the potential impact this policy would have on small businesses, especially those that produce product with a short-shelf life, and those entities who import product. Commenters also raised other concerns and requested clarification on some points.

Effect on Small and Very Small Businesses

The majority of the industry commenters raised concerns about the impact of this policy on small businesses and businesses that produce product with a short-shelf life (e.g., fresh sausage, or fresh ground beef, or chicken salad). There was a general concern that establishments may need to hold product for longer than its shelf life. Some commenters emphasized the need for FSIS to pay special attention to the needs of small and very small establishments by providing them sufficient notification of the sample collection (e.g., more that 48 hours) and to provide them the ability to produce smaller batches of product. Also, commenters suggested that FSIS laboratories should prioritize the analysis of samples, in particular samples of ground beef, collected at small and very small establishment. Commenters raised concerns that sample discards would further delay the process and have a negative financial impact on small and very small establishments.

Response

Before implementing this new policy, FSIS will issue instructions reiterating to inspection program personnel that they are to provide establishments prior notification of sampling for adulterants. FSIS will also issue specific instructions

to address sample collection at small and very small establishments to make it clear that small and very small establishments can produce smaller representative batches of product for sampling. This will help small and very small establishments reduce their lot size on a day when FSIS collects a sample. Thus, for products with short shelf-life, a firm may produce and hold a lot subject to FSIS sampling that is demonstrated by the establishment to be microbiologically independent from other production lots, conduct a clean-up, and then produce other like product eligible to be shipped into commerce. FSIS also intends to provide small and very small establishments with new compliance guidance for how to properly produce representative small batches of product.

FSIS begins testing of all ground beef samples for microbiological pathogen analysis the day of receipt, including Saturdays. Also, FSIS begins testing of all ready-to-eat product samples (e.g., chicken salad) for microbiological pathogen analysis the day of receipt, including Saturdays. FSIS will remain committed to having most negative tests results available in 1–2 days. In regard to sample discards, any sample that the FSIS laboratory may discard would occur the day of receipt and would not increase turnaround times in any way.

Additionally, FSIS will consider reducing its frequency of sampling at small and very small establishments that have programs in place that include measures such as purchase specifications that address controls for pathogens in incoming product and product and food contact surface verification testing.

Imported Product

FSIS received a number of comments, including comments from foreign trade organizations and governments, stating that this new procedure would impact imports because imported products would need to be held at the border, which would be costly and difficult. The commenters asserted that the domestic FSIS policy that provides that establishments can move product that FSIS has tested for adulterants under their control (e.g., under company seals) should be extended to importers.

Response

Foreign establishments and inspection services will not be directly affected by this policy. However, the policy will affect the importer of record when FSIS tests product at the border during re-inspection. FSIS will not require the product tested by FSIS for adulterants to be held at the import establishment until results become available. When this new policy becomes effective, the policy for imported product will be consistent with the policy for domestic product. The importer of record will be required to control all affected products that FSIS tests for adulterants during re-inspection so that they do not enter commerce until the test results are received. However, the importer of record could move the product away from the import establishment, provided the product moves under company seal or other adequate controls.

Controlling Product

Industry commenters raised several points regarding how FSIS expects establishments to control product. The 2011 notice explained that, consistent with current policy, establishments would be able to move product and maintain the integrity of the lot under company seal (76 FR 19955). The commenters stated that FSIS should not prescribe the specific use of company seals but should allow establishments to use any effective mechanism, which may or may not include company seals.

Industry commenters also questioned the statement in the **Federal Register** notice that establishments could not transfer ownership of product until it received negative test results (76 FR 19955). The commenters held that strict application of this approach would force an unnecessary change in business practices. The commenters stated that the critical issue is not one of ownership, but one of product control.

Lastly, several industry commenters expressed concerns with the statement in the **Federal Register** notice that the pre-shipment review of records associated with the production lot will not be complete without the pending test results (76 FR 19955). The commenters stated that establishments have been operating under the Hazard Analysis and Critical Control Point (HACCP) regulations for years and most likely have a specific way to complete HACCP documentation. The commenters believed that to interrupt the establishment procedures for the pre-shipment review could cause confusion and could result in products being overlooked or mistakes in documentation.

Response

Establishments will need to have effective controls to prevent product that has been tested for adulterants from entering commerce before results become available. For such product, FSIS is not requiring the use of company seals, but the Agency will require establishments to document and support that they can control the product pending the availability of test results.

The statements made in the **Federal Register** concerning maintaining ownership of the product and not completing pre-shipment review are consistent with current policy. Also, if ownership of the product changes, the product has entered commerce. FSIS has stated in documents (e.g., in FSIS directives, notices, and questions and answers post of the FSIS web page) that establishments may move product off–site pending final test results if they do not complete pre-shipment review or transfer ownership of the product to another entity. When an establishment completes a pre-shipment review (9 CFR 417.5(c)), the establishment indicates that it takes full and final responsibility for applying its HACCP controls to the product that it has produced. Further, if the establishment has completed pre-shipment review pending test results, and the results are positive, the establishment has produced and shipped adulterated product into commerce.

Confusion Regarding Certain Terminology

Industry commenters expressed concern over the use of the term ''hold and test''. They asserted that they would need to hold all tested products on site, and that in most cases that would be costly and extremely difficult to accomplish. Others were concerned that FSIS would place ''U.S. retained'' tags on product.

Similarly, industry commenters stated that the use of the term ''withholding the mark of inspection'' may cause some individuals to think that the standard practice of preprinted labels with the Federal mark of inspection would be prohibited under this new policy.

Response

Establishments will not be required to hold product tested by FSIS for adulterants at the establishment, provided they have effective controls in place for it to move elsewhere under their ownership so that the product does not enter into commerce until the establishment receives negative results. Also, FSIS inspectors do not retain products tested by FSIS for adulterants pending test results; however, when FSIS inspection program personnel believe an animal may contain violative levels of residues, they will continue to deem it ''U.S. Suspect,'' retain the carcass, and submit samples for residue testing.

FSIS recognizes that the mark of inspection is pre-printed on the package label of many products, and that it is most efficient to allow the product to be packaged and labeled with the printed mark of inspection as part of the production process (76 FR 19955). FSIS will continue to allow meat and poultry establishments to package and label products sampled and tested for adulterants with the mark of inspection. However, such product will not be eligible for shipment into commerce until negative test results for adulterants are available.

Lot Definition

A number of industry commenters recommended that FSIS should better define and provide guidance on lot sizes. Commenters stated that without clear guidance on lot sizing, establishments risk non-compliance if they do not have a supportable basis for defining the sampled lot. Many commenters also recommended that FSIS better train its inspectors on lot-size definitions.

Response

The establishment is responsible for having a supportable basis to define the sampled lot. FSIS has developed compliance guidance and questions and answers for ways to determine lot sizes based, in part, on establishing microbiological independence of one production lot to another. For drug residues, lots typically are determined on a carcass basis during the slaughter operation, unless there is evidence of flock or herd application of a drug treatment. Additionally, FSIS has provided its inspection program personnel with the necessary implementation issuances for them to assess how establishments may determine lot size.

For *E. coli* O157:H7, prior to FSIS's sampling, inspection program personnel inform the establishment that it is responsible for defining the sampled lot. Some factors or conditions that the establishment should consider in defining the sampled lot include scientific, statistically-based sampling programs for *E. coli* O157:H7 that the establishment may use to distinguish between segments of production; Sanitation Standard Operating Procedures (Sanitation SOPs) or other prerequisite programs used to control the spread of *E. coli* O157:H7 cross-contamination between raw beef components during production; processing interventions that limit or control *E. coli* O157:H7 contamination; and whether beef manufacturing trimmings and other raw ground beef components or rework are carried over from one production period to another.

FSIS does not recognize ''clean-up to clean-up'' alone as a supportable basis for distinguishing one portion of production of raw beef product from another portion of production. Rather, establishments should consider whether the same source materials are used during different production periods.

For testing of ready-to-eat product or contact surfaces for *Listeria monocytogenes* or for testing such product for *Salmonella,* inspection program personnel also inform the establishment that it is responsible for determining the lot. In contrast to *E. coli* O157:H7, for these types of testing, the sampled lot is generally considered the ready-to-eat product that is produced from clean-up to clean-up because the product typically undergoes consistent cooking and other lethality procedures during the production period.

Applying the Policy to Establishment Testing

Most industry commenters were against FSIS extending the new policy to establishment testing, although some consumer and trade organization groups thought the policy should apply to establishment testing. The commenters opposed were concerned that imposing this policy on establishment testing may cause them to test their own product less often.

Response

At this time, the policy will apply only to product that FSIS tests for adulterants. However, FSIS will monitor the situation to track how often establishments release product into commerce before establishment test results for adulterants become available. If an establishment tests its product for an adulterant, releases the product into commerce, and results are positive, FSIS will request that the establishment recall the product. FSIS is aware of the impact of establishment verification testing on resources, particularly related to storage and handling and product shelf-life. Nonetheless, establishments should design their food safety system within their available resources to take all necessary and practical steps to ensure that only safe product enters commerce.

Economic Adulteration

Some industry commenters raised concerns about the new policy extending to economic adulteration. The commenters stated that FSIS testing for economic adulteration (e.g., protein-fat-free, moisture in hams) is infrequent. The commenters requested that FSIS clarify whether or not this testing would fall under this new policy.

Response

As stated in the 2011 **Federal Register** notice, FSIS testing that indicates product is economically adulterated would be subject to the actions outlined in this document, and, therefore, establishments will be required to control such products from entering commerce that FSIS tests for economic adulterants until negative results become available (76 FR 19953). As stated in the 2011 **Federal Register** notice, FSIS conducts minimal testing for economic adulteration (76 FR 19953).

Retail Exempt

Some industry commenters asked whether the new policy would apply to retail exempt facilities, (e.g., grocery stores)as defined in 9 CFR 303.1(d) & 381.10(d). These commenters noted that FSIS samples ground beef product at retail for Agency *E. coli* O157:H7 testing.

Response

Meat and poultry products prepared at retail exempt facilities come from federally or state-inspected source materials. Such source material would already bear the Federal or State marks of inspection when it arrives at retail. Therefore, this new policy does not directly affect retail exempt facilities as the marks of inspection are not applied at retail.

However, when FSIS OPEER Investigators sample raw ground beef for *E. coli* O157:H7 at retail facilities that grind raw beef products, the Agency recommends the facility hold the raw ground beef product pending Agency test results to prevent the need for a recall.

Comments Recommending Additional Agency Measures

Some consumer group commenters who supported the policy stated that FSIS needs to pursue more rapid testing, define more pathogens as adulterants, test 100% of trim for *E. coli* O157:H7, and increase its trace back abilities. Also, a commenter stated that the new policy should apply to the residue testing of poultry carcasses. The commenter believed this to be necessary because of the use of arsenic-based drugs in poultry feed.

Response

FSIS testing programs are integral to the day-to-day inspection program and verification activities of FSIS inspection program personnel in official

establishments. While the establishment is responsible for ensuring that the product it produces is safe, FSIS testing is an important activity to verify whether the establishment's HACCP system ensures the production of unadulterated product. In addition, FSIS has declared six non-O157 shiga toxin producing *E. coli* (non-O157 STEC) to be adulterants in non-intact raw beef products and raw beef products intended for non-intact use (76 FR 72331). FSIS recently improved its traceback procedures because, starting in 2010, the Agency began collecting supplier information at the time it collects ground beef and bench trim samples for *E. coli* testing. Furthermore, FSIS recently announced additional new traceback procedures and new recall procedures it intends to implement (77 FR 2675).

FSIS has consulted with the Food and Drug Administration (FDA) in regard to use of arsenic-based drugs in poultry feed. Based on the sponsor's voluntary suspension of the U.S. sales of the primary arsenic product approved for use in poultry, 3-Nitro (Roxarsone), FDA does not expect residues to be an issue of concern. Therefore, as stated in the 2011 **Federal Register** notice, because of the significant number of poultry carcasses in a lot, the economic effect of holding such a lot, and because, historically, FSIS has not seen residue problems in poultry tested for residues, such product will not need to be held from commerce pending negative test results. If FSIS were to find violative residues in poultry, FSIS would, of course, reconsider this issue.

Enforcement

Some industry commenters stated that the Agency was silent on the potential penalties FSIS would issue should an establishment not comply with these new requirements and requested that FSIS specify the penalties that will apply.

Response

When this policy becomes effective, FSIS will follow its regulations at 9 CFR part 500, Rules of Practice. If an establishment fails to prevent products tested by FSIS for adulterants from entering commerce before negative test results are received, the establishment may have produced and shipped adulterated or uninspected product. In this situation, the Office of Field Operations would take appropriate enforcement action (e.g., immediately suspending inspection or issuing a Notice of Intended Enforcement Action). Also, FSIS will request a voluntary recall of product, detain the product in commerce, or institute other product control actions if necessary. FSIS will consider additional enforcement actions or sanctions when necessary.

Downstream Testing

Some industry commenters stated that if the policy is implemented, FSIS would need to consider what product is subject to the policy if the agency samples products downstream. They stated that if samples are taken downstream, the policy should only apply to the last establishment where FSIS tested product. As an example, they stated that if a distributor sells products (e.g., trim in small boxes), which in turn may be tested at a further processor, the lot subject to control is the lot produced at the further processor, not the product disseminated by the distributor.

Response

The establishment responsible for controlling product tested by FSIS is the establishment where FSIS collects the sample. (Note that FSIS tests beef manufacturing trimmings at the slaughter establishment, not at a further processor.) However, if a further processor grinds the trim or produces bench trim from materials derived from cattle not slaughtered on site at that establishment, FSIS may sample such product.

Nevertheless, FSIS, through its trace-back activities, seeks to determine the facts associated with contamination. In most cases, FSIS' objective is to identify the most likely point in the production process at which contamination occurred, e.g., the slaughter dressing operation. Therefore, if FSIS finds ground beef or bench trim positive at a further processor, FSIS conducts follow up testing and other verification activities at the slaughter establishment that supplied the source materials. In addition, each point in the production process affords an opportunity for the subsequent establishments and operations handling the product (e.g., including retail) to exert control to ensure that the product is not adulterated. Thus, FSIS takes appropriate action to ensure that all handlers of the product are complying with the requirements of the inspection laws and regulations.

Summary and Conclusion

After consideration of all comments and for the reasons discussed above, FSIS will implement a new policy that requires official establishments and importers of record to maintain control of product tested for adulterants by FSIS and not allow such products to enter commerce until negative test results are received. The policy applies to non-intact raw beef product or intact raw beef product intended for non-intact use that is tested by FSIS for STECs. Also, the policy applies to any ready-to-eat products tested by FSIS for pathogens. Similarly, this policy applies to ready-to-eat product that passed over food-contact surfaces that have been tested for the presence of a pathogen by FSIS. This policy does not cover raw meat or poultry products tested for *Salmonella* or other pathogens that FSIS has not determined to be adulterants of those products.

The new policy also applies to livestock carcasses subject to FSIS testing for veterinary drugs, such as antibiotics, sulfonamides, or avermectins or the feed additive carbadox.

Finally, FSIS testing that indicates product is economically adulterated would be subject to the actions outlined in this document, and, therefore, establishments will be required to control such products from entering commerce that FSIS tests for economic adulterants until negative results become available.

Costs and Benefits

The discussion below is consistent with the discussion of costs and benefits in the 2011 **Federal Register** notice. However, it has been updated to include 2010 recall data and new Cost of Illness per case numbers updated in April, 2012. The new estimates represent a lower bound for an average cost of illness because they only include medical costs and loss-of-productivity costs. They do not include pain and suffering costs. Complete 2011 recall data was not available at the time this notice was developed. FSIS did not update the cost estimates from the 2011 **Federal Register** notice because these data either do not change significantly from year to year or more updated data are not currently available.

In addition, FSIS did not consider non-O157 STEC in the benefits and costs analysis. In June 2012, FSIS began testing for six non-O157 STEC in raw beef manufacturing trimmings. Although FSIS anticipates additional public health benefits will accrue as a result of establishments maintaining control of such products tested by FSIS until negative results for non-O157 STEC become available, there is not enough data to accurately estimate benefits at this time. As for the costs, there would be no change from the numbers presented in this analysis. All of the costs associated with the implementation of the Agency's testing

for non-O157 STEC are captured within the estimates for *E. coli* O157:H7 in raw, non-intact beef products (Group 1, Table 3). When FSIS collects samples of beef manufacturing trimmings, it tests them for both *E. coli* O157:H7 and non-O157 STEC.

Expected Benefits of the Action

The Agency expects benefits from this policy to accrue to consumers, Government, and industry.

If an establishment fails to hold a product when FSIS tests for a pathogen, and the test is positive, the establishment will be asked to recall the product. Because the pathogens for which FSIS does testing represent an immediate threat to human health, the recall would be classified as a Class I recall.[1] Table 1 shows Class I recalls (2007–2010) for FSIS testing that are included in the universe for this policy analysis. These recalls were for *E. coli* O157:H7, *Listeria monocytogenes* (*Lm*), and *Salmonella* in RTE product. In 2007 there were 14 Class I recalls as a result of FSIS testing; in 2008 there were 19 Class I recalls; in 2009 there were 11 Class I recalls; and in 2010 there were 5 Class I recalls. In 2007 seven of the Class I recalls were for *E. coli* O157:H7 and seven for *Lm.* In 2008, seven of the Class I recalls were for *E. coli* O157:H7 and twelve for *Lm.* In 2009, eight of the Class I recalls were for *E. coli* O157:H7, and three were for *Lm.* In 2010, one of the Class I recalls was for *E. coli* 0157:H7, three for *Lm,* and one for *Salmonella* in Ready-to-Eat (RTE).

TABLE 1—CLASS 1 RECALLS INCLUDED IN TEST-AND-HOLD POLICY UNIVERSE DERIVED FROM FSIS TESTS (2007–2010)

Year and type	*E. coli* O157:H7	*Lm*	*Salmonella*	*TOTAL*
2007, FSIS	7	7	0	14
2008, FSIS	7	12	0	19
2009, FSIS	8	3	0	11
2010, FSIS	1	3	1	5
Total	23	25	1	49

Note: Data source FSIS recall division.

If the combination of industry and Government costs per recall on average is $1 million,[2] then the total annual cost of FSIS recalls could be on average as high as $12 million per year.[3]

Considering costs to retailers as well as manufacturers and State, local, and Federal authorities, a class I recall may cost as much as $3 million to $5 million.[4] Using a conservative estimate, if the actual cost of a recall for industry and government combined is closer to $3 million than $5 million,[5] then the annual cost of the recall (the benefit of avoiding these recalls) could be as high as $37.0 million annually (49 recalls/4 years* $3 million).

In addition to the cost savings attributed to avoiding recalls described above, firms generally suffer a loss of sales, at least temporarily, following a Class I or Class II recall. This alone does not result in a social cost, but rather a social transfer, as other firms will step forward to capture sales lost by the recalling firm. However, in addition to the resources invested in recalling the product, the recalling firm may incur additional advertising costs to recapture the loss of sales plus the flow of future sales, which is a social cost. Additionally, there can be a loss of reputation for the manufacturer and the brand associated with recalls that may affect future sales.

Consumer

FSIS expects the consumer to benefit from: (1) Reduced incidence of adulterated product being released into commerce, (2) fewer recalls resulting in higher confidence and acceptability of products, and (3) lower levels of illness. This new policy will lead to increased consumer confidence and acceptance of product through reduced recalls and negative press.[6]

Government

FSIS expects there to be a reduction in the number of recalls, and, therefore, the Agency expects to benefit from lower Agency costs for recalls and recovery of adulterated product because of: (1) Reduced inspection program personnel activities at Federal establishments, (2) reduced overtime hours for FSIS staff, and (3) reduced staff travel to establishments after recalls to conduct Food Safety Assessments (FSA) and recall effectiveness checks. These expenses would include air, train, or car travel; lodging; and per diem expenses for meals. In addition, FSIS should have less need to disseminate information about food recalls through press releases and recall releases.

Industry

Under this policy change, the meat and poultry processing and slaughter industries will benefit from fewer recalls and negative press. As the number of recalls decline, there will likely be: (1) An increase in consumers' confidence, (2) reduced costs for recalls, and (3) greater consumer acceptance of products.

Initially, preventing adulterated product from going into commerce should reduce operating costs.

[1] There are three classes of recalls. *Class I:* a health hazard situation where there is a reasonable possibility that the use of the product will cause serious, adverse health consequences; *Class II:* a health hazard situation where there is a remote probability of adverse health consequences from the use of the product; and *Class III:* a situation where the use of the product will not cause adverse health consequences.

[2] ''Preliminary Regulatory Impact Analysis and Initial Regulatory Flexibility Analysis of the Proposed Rules to Ensure the Safety of Juice and Juice Products'' (63 FR 24258; May 1, 1998).

[3] The annual figure of $12 million is derived by summing the total number of FSIS recalls for 2007–2010 from Table 1, then multiplying the total by $1 million which is the average cost per recall for industry and government. That figure is then divided by 4 to get the annual amount. (14 + 19 + 11 + 5 = 49 * 1M = 49M/4 = $12.3 M per year, which is then rounded to $12 M).

[4] ''Preliminary Regulatory Impact Analysis and Initial Regulatory Flexibility Analysis of the Proposed Rules to Ensure the Safety of Juice and Juice Products'' (63 FR 24258; May 1, 1998).

[5] Ibid.

[6] Ollinger, Michael, working paper. ''Many economists have examined the effects of reputation loss and the production of unsafe food. Packman (1998) argues that the negative publicity generated from a recall can erode prior investments in reputation and brand capital. Economists (Thomsen and McKenzie, 2001; Pruitt and Peterson; Salin and Hooker) found that firms that voluntarily recalled contaminated meat and poultry products suffered a decline in long run profitability (i.e., significant declines in stock prices). A number of studies (Piggott and Marsh, 2004; Marsh, Schroeder, and Mintert, 2004) determined that adverse meat and poultry food safety events led to temporary declines in meat and poultry consumption. Thomsen, Shiptsova, and Hamm (2006) established that sales of branded frankfurter products declined more than 20 percent after product recalls.''

Operating costs will be lower because companies will be less likely to have a recall and experience the adverse impacts to business reputation as well as the product loss associated with a recall. Avoiding adverse impacts on business reputation is an indirect benefit.

Imported Product

There were 11 Class I recalls of FSIS tested imported product for the 2007–2010 (Table 1) time period, 4 for *E. coli* O157:H7 and 7 for *Lm.* One recall occurred in 2007, (*Lm*), eight in 2008 (4 for *E. coli* O157:H7 and 4 for (*Lm*)) and two in 2010 (*Lm).* There were no recalls from FSIS testing for imported product in 2009. All of these recalls are included within the universe described in Table 1 and therefore are included in the Benefits section within this analysis.

Human Health Benefits

Introduction

The Centers for Disease Control and Prevention (CDC) has estimated that Shiga toxin-producing *E. coli* O157:H7 infections cause 63,000 illnesses annually in the United States, resulting in more than 2,138 hospitalizations and 20 deaths.[7] The Economic Research Service (ERS) estimates that the annual economic cost of illness caused by *E. coli* O157:H7 is $489 million [8] (in 2010 dollars) for all cases, not just for foodborne cases.

The occurrence of recalls demonstrates that pathogens have been present on raw meat and poultry products distributed in commerce under FSIS's existing approach. These pathogens represent a hazard to human health. Thus, public health likely will benefit because meat and poultry products will be held until results of pathogen tests are returned as negative. If test results are positive, the product will be destroyed or further processed to destroy the pathogen, rather than having to be recalled. This change will thus reduce foodborne pathogens in products that are released into commerce. The economic health benefits are expected to be small relative to the economic benefits of avoided recalls.

To reach this conclusion FSIS analyzed both the actual illnesses from the universe described in Table 1 and estimated future illnesses averted as a result of this change. We discuss in Section A (Potential averted illnesses from this policy using actual case data) the research conducted by the Economic Research Service (ERS) for each of the pathogens, *E. coli* O157:H7, *Lm,* and *Salmonella,* as well as their associated costs per case.[9]

A. Potential Averted Illnesses From This Policy Using Actual Case Data

(1) During 2007–2010, there were 23 recalls for *E. coli* O157:H7 from FSIS testing. None of these recalls resulted in any illnesses according to FSIS's Office of Public Health Science (OPHS) data. The ERS estimate excludes a number of other potential costs, such as those for special education, nursing homes, travel, childcare, and pain and suffering. Illnesses for *E. coli* O157:H7 are divided into seven severity levels depending on whether the patient visits a physician or not, develops Hemolytic Uremic Syndrome (HUS) or not, develops End-stage renal disease or not, and finally whether death occurs. For each of these classes, ERS derives an average cost of illness. The CDC classifies illnesses into three classes: Death, hospitalizations, and other.[10] FSIS used these classifications and the percentages of cases identified in them to estimate $3,281 as the average cost per case.[11]

(2) During 2007–2010 there were 25 recalls for *Lm* from FSIS testing. Only one of these recalls was associated with illnesses. In 2008, there were two illnesses, one of which was fatal, when a customer consumed chicken salad that had been released into commerce before the FSIS test results were returned as positive. The cost of Lm illness is $1.3 million per case.[12] Benefits from averting the two illnesses had the establishment held the product until the test results returned a positive would be $2.6 million ($1.3 M * 2), or $650,000 annually.

(3) There was one recall from FSIS testing for *Salmonella* in RTE product during 2007–2010. Research has shown that the cost per case of a *Salmonella* illness is $2,423, or $606 annually.[13]

B. Estimated Averted Illnesses From This Policy

FSIS has developed a model [14] to estimate annual illnesses averted per positive sample from holding FSIS tested product until testing results are returned. This model is based on 2007–2010 recall data, as well as the OPHS illness data occurring from these recalls.[15] The model estimates expected illnesses by accounting for volume of product recalled and ''time in days'' between the dates of production of adulterated product until the date of recall of that adulterated product. With this policy in effect, the FSIS model estimated the upper 95% confidence bound of averted *E. coli* O157:H7 illnesses to be approximately 3.07 for a four year period (based on the 2007–2010 data). FSIS estimated human health benefits, based on averting these 3.07 *E. coli* O157:H7 illnesses to be approximately $2,518 annually ($3,281*3.07/4).

Using similar methodology and an estimated number of illnesses of 0.32 for *Listeria monocytogenes* and .34 for *Salmonella,* in RTE product, the annual cost is $104,000 and $206 respectively. For the three pathogens, *E. coli* O157:H7, *Listeria monocytogenes,* and *Salmonella* human health benefits are estimated from the model to be

[7] Scallan E. Hoekstra RM, Angulo FJ, Tauxe RV, Widdowson MA, Roy SL, et al. ''Foodborne Illness Acquired in the United States—Major Pathogens''. *Emerging Infectious Diseases.* 2011 January. Table 2 of this report provides foodborne STEC O157:H7 illnesses at: 63,153, with 90% confidence of (17,587–149,631). Table 3 of this report provides STEC O157:H7 hospitalizations at 2,138, with 90% confidence of (549–4,614) and deaths of 20, with 90% confidence of (0–113).

[8] Frenzen, Paul D., Drake, Alison, Angulo, F.J., and the Emerging Infections Program Foodnet Working Group. Journal of Food Protection, Vol. 68 No. 12, 2005, pp. 2623–2630.

[9] ERS cost calculator can be found on their Web site at *http://www.ers.usda.gov.*

[10] Scallan E. Hoekstra, Angulo FJ, Tauxe RV, Widdowson MA, Roy SL, et. al. ''Foodborne Illness Acquired in the United States—Major Pathogens''. *Emerging Infectious Diseases.* 2011 January.

[11] The FSIS estimate for the cost of *E. coli* O157:H7($3,281 per case,—2010 dollars) was developed using the USDA, ERS Foodborned Illness Cost Calculator: STEC O157 (June 2011). FSIS updated the ERS calculator to incorporate the Scallan (2011) case distribution for STEC O157.Scallan E. Hoekstra, Angulo FJ, Tauxe RV, Widdowson MA, Roy SL, et. al. ''Foodborne Illness Acquired in the United States—Major Pathogens''. *Emerging Infectious Diseases.* 2011 January.

[12] The FSIS estimate for the cost of *Lm* illness ($1.3 million per case—2010 dollars) is based on a model developed by Buzby, et al. (1996). The Buzby model is limited to medical costs and productivity loss. Therefore, in order to account for death, FSIS incorporated the value of statistical life in the overall cost calculation. Buzby, J.C., T.C. Roberts, J.T. Lin, and J.M. MacDonald. 1996. ''Bacterial foodborne disease: medical costs and productivity losses''. U.S. Department of Agriculture, Economic Research Services, AER–741. U.S. Department of Agriculture, Washington, DC.

[13] The FSIS estimate for the cost of *Salmonella* ($2,423 per case—2010 dollars) was developed using the USDA, ERS Foodborne Illness Cost Calculator: *Salmonella* (June 2011). FSIS updated the ERS calculator to incorporate the Scallan (2011) case distribution for *Salmonella.*

[14] See Appendix 1: ''Development of model for predicting averted illnesses due to *E. coli* O157:H7 from Test and Hold'' and Appendix 2: ''Data used in Analysis.'' A copy of these documents are available for viewing in the FSIS Docket Room and on the FSIS Web site as related documents associated with this docket.

[15] OPHS data was used for the model that contained illnesses from all recalls and all sources. This included Outbreak, Illness, FSIS Test, and Establishment Test. This was done only for the purpose of estimating the rational expectation of future illnesses averted by this policy.

approximately $106,724 annually. See Table 2.

TABLE 2—HUMAN HEALTH BENEFITS FROM ACTUAL RECALLS AND ESTIMATED MODEL (2007–2010)

Pathogen	Cost per case	Actual cases 2007–2010	Actual annual benefit 2007–2010	FSIS estimated cases averted (model) 2007–2010 **	Annual benefit (model)
E. coli O157:H7	$3,281	0	$0	3.07	$ 2,518
Listeria Monocytogenes	1.3 M	2	650,000	.32	104,000
Salmonella	2,423	0	0	.34	206
Total			650,000	3.73	106,724

* **Note:** LM is known to have a high death rate and as such one death is included in the expectation of benefits from illnesses averted.
** Table 3 of the Model (Appendix) estimates illnesses for 10 years. To make the numbers comparable we used estimated illnesses from the model/10*4 to derive the numbers in this column.

Total human health benefits from the FSIS model and actual reported illnesses combined would be approximately $756,724 annually ($650,000 + $106,724). Differences may be due to rounding.

Residue Benefits

Microbiological hazards are expected to drive the cost-benefit analysis because they result in an attributable short term, low (morbidity) to high (morbidity) impact consequences that can be realistically estimated.

The cost-benefit analysis for chemical hazards on the other hand is difficult to quantify. The negative health effects of exposure to low levels of chemicals are long term and multifactorial. Single exposure to low levels of chemicals or cumulative exposure can contribute to negative health affects for example, cancer, 10, 20, or more years later. Of course, over such long periods of time, individuals are exposed to a variety of hazards making it impossible to quantify the contribution of the chemical exposure to societal and medical costs. The approach for conducting a cost benefit analysis for single incidents of contamination at levels that cause immediate morbidity or mortality, i.e., where the health effects are readily attributable to the exposure, is comparable to microbiological hazards.

The Food and Drug Administration (FDA) conducts risk assessments to establish what level of chemical residues in food has a reasonable certainty of no harm when consumed by humans.[16] They consider acute and chronic exposure scenarios to set residue limits and include a wide margin of safety in their calculations. Meat, poultry, and egg products with chemical residues that exceed the tolerances or other limits set, or for which no scale level has been set, by EPA and FDA are adulterated and unsafe for human consumption.

Summary of Benefits

The annual benefits from this policy change come from:

(1) Reduced costs of recalls, $12 million to $37 million,

(2) Actual averted illnesses, $650,000 as shown in Table 2, and

(3) Estimated Averted illnesses for *E. coli* O157:H7, *Listeria moncytogenes* and *Salmonella* of $106,724 as shown in Table 2.

Total benefits from this policy change are estimated to range between $12.8 million and $37.8 million annually.

Expected Costs of the Action

FSIS prepared a paper in September, 2006 to provide data on trends in the industry practice of holding meat and poultry products pending results of FSIS microbiological testing.[17] Identifying trends in industry holding practices provides a context and baseline for any future evaluation of the effects of holding product pending test results. FSIS examined test data for the calendar years 2003 through 2005, as well as data for the first eight months of 2006, and grouped data by establishment size and pathogen. Specifically, FSIS examined the hold/release information included with FSIS testing results for the following pathogens in five different groups: (1) *E. coli* O157:H7 in raw, non-intact beef produced by domestic official establishments;[18] (2) *E. coli* O157:H7 in domestically-produced RTE meat and poultry; (3) *Salmonella* in domestically-produced RTE meat and poultry; (4) *Lm* in domestically-produced RTE meat and poultry; and (5) *Lm* on food-contact surfaces in establishments that produce RTE meat and poultry products.

A. Domestic Product

(1) Micro Testing

FSIS found the following results of meat and poultry product being held by establishments prior to receiving FSIS test results. Table 3 shows the results by establishment size for the first 8 months of year 2006 for the five test groups described above.

TABLE 3—PERCENT OF PRODUCT BEING HELD BY ESTABLISHMENT SIZE FOR 2006 (JAN–AUG)

	Large %	Small %	Very small %	Unknown %
Group 1	100	83	79	57
Group 2	100	93	88	100
Group 3	100	90	82	93

[16] See General Accounting Office (GAO) report ''Chemical Risk Assessment: Selected Federal Agencies' Procedures, Assumptions, and Policies'', GAO–01–810, August 2001 at *http://www/gao.gov/new.items/d01810.pdf.*

[17] A summary of the FSIS's analysis is available electronically at *http://www.fsis.usda.gov/OPPDE/NACMPI/May2006/Test_and_Hold_Report_NACMPI.pdf.*

[18] In this paper, FSIS did not examine results from the recently initiated FSIS baseline testing of beef trim for *E. coli* O157:H7 and *Salmonella.*

TABLE 3—PERCENT OF PRODUCT BEING HELD BY ESTABLISHMENT SIZE FOR 2006 (JAN–AUG)—Continued

	Large %	Small %	Very small %	Unknown %
Group 4	99	91	82	93
Group 5	100	97	88	—

Group 1: Percent of raw, non-intact beef Products held after Agency *E. coli* O157:H7 Sampling.
Group 2: Percent of RTE Products held after Agency *E. coli* O157:H7 Sampling.
Group 3: Percent of RTE Products held after Agency *Salmonella* Sampling.
Group 4: Percent of RTE Products held after Agency *Lm* Product Sampling.
Group 5: Percent of RTE Products held after Agency *Lm* Food Contact Surface Sampling.
Note: This data is the latest available data for product held in establishments from FSIS testing. Study by the Office of Program, Evaluation, Enforcement, and Review (OPEER).

In evaluating recent data, the Agency has noted that establishments' releasing product into commerce before receiving test results continues to be a problem.

However, using the percentage numbers from Table 3 for the first eight months of 2006 will provide a basis for establishing the costs for 2007–2010 to hold product until test results are returned.

Table 4 shows the number of Federally inspected meat and poultry establishments by establishment size and presents in columns 3 and 4, based on the results from Table 3, the number of establishments currently holding product, as well as the number of establishments that will need to hold product as a result of this policy change.

TABLE 4—FEDERAL INSPECTED MEAT/POULTRY ESTABLISHMENTS

Establishment size (1)	Number of establishments * (2)	Holds product (3)	Does not hold product (4)
LARGE	362	362	0
SMALL	2,366	1,964–2,295	71–402
VERY SMALL	2,900	2,291–2,552	348–609
UNKNOWN	578	329–578	0–249
TOTAL	6,206	4,946–5,787	419–1,260

* Source: Performance Based Inspection System (PBIS) 1/3/2008. There has been no substantial change in establishment numbers.
The data provided in Table 3 are used to calculate the number of establishments holding product (column 3) and the number of establishments not holding product (column 4).

Across establishment size, between 79 percent and 100 percent of establishments already hold product pending test results, and between zero and 21 percent will need to hold product pending test results.

From the enumerations shown in Table 4, FSIS assumes, for cost purposes only, that all 362 large establishments are holding all tested product for results. Approximately 71–402 small establishments, 348–609 very small establishments, and between 0 and 249 unknown size establishments do not hold tested product and will be affected by this new policy. Table 4, column 4 shows the range of establishments that will have to hold product pending test results before FSIS will apply the USDA mark of inspection. A total of between 419 and 1,260 federally inspected meat and poultry establishments will be affected by this policy change. There will be no additional costs to any of the large establishments as they are assumed to hold all tested product. FSIS expects that among the remaining establishments that do not hold tested product, there will be an adjustment of lot size to accommodate necessary storage capacity at the establishment prior to an FSIS test.

FSIS conducted further research on all FSIS tests conducted in the year 2007. Combining the percentages of product held from Table 3 and the estimates of common lot sizes from the following Table 5, FSIS reached certain conclusions about the additional pounds of product that would need to be held by the small and very small establishments which is shown in Table 6.

TABLE 5—ESTIMATED LOT SIZES BY ESTABLISHMENT SIZE

Establishment size	Lot size produced	Average lot size tested *
LARGE	2,000–30,000 pounds	2,000 pounds.
SMALL	1,000–10,000 pounds	1,000 pounds.
VERY SMALL	50–2,000 pounds	50–60 pounds.

Source: Common Industry Practice and expert elicitation.
* Tested lots are smaller than typical production lot sizes.

FSIS estimates the common industry practice for average lot sizes tested to be approximately 2,000 pounds at large establishments, 1,000 pounds at small establishments, and between 50–60 pounds at very small establishments. As a result of the above lot size estimations, there may be a certain number of small and very small establishments that will

incur costs relative to additional storage (recurring costs) or for capital equipment (one-time costs), in order to hold tested product.

TABLE 6—ADDITIONAL COST PER ESTABLISHMENT TO HOLD ESTIMATED POUNDS OF PRODUCT

	Lbs to be held by Est.	Days product to be held	Cost per Est. to store product
LARGE	0	3–8	$0
SMALL	4,511	3–8	5,000
V/SMALL	1,329	3–8	1,000
UNKNOWN	1,011	3–8	1,000

Source: FSIS/OPEER/OCIO data.
Cost per commercial freezer @ $5,000 per 300 cu. ft. for small establishments. Cost of stand-up freezer for very small establishments @ $1,000.

Factors affecting this cost impact include: (1) The amount of product needed to be handled and placed into storage; (2) the average number of days of storage; (3) the number of times per year that tests occur; and (4) the cost per day in handling and storage.

The costs shown in Table 6 would predominately be one-time capital expenditures to purchase freezers for storage of tested product. There will be a small amount of electricity charges to operate the refrigeration units, but we do not anticipate that they would be significant. Labor costs would also be minimal to accommodate the additional product stored. Additionally, FSIS recognizes the concern of some very small establishments that they could lose some product because of the product's short shelf life, and that an establishment could experience some inability to satisfy customer orders, resulting in a short-term disruption in business activities.[19] FSIS does not have sufficient information to include costs associated with this disruption in the analysis.

Table 7 combines the results of tables 4, 5 and 6 and shows that the estimated total costs to all small and very small (and unknown) establishments that do not hold product domestically would range between $703,000 and $2.87 million.

TABLE 7—TOTAL ONE-TIME COST PER ESTABLISHMENT SIZE

Establishment size	Number of establishments affected	Cost/Est. to store product	One-time total cost to hold product *	Annualized 7%—10 years
Large	0	$0	$0	$0
Small	71–402	5,000	355K–2.01M	50,541–299,000
Very Small	348–609	1,000	348K–609K	49,545–86,700
Unknown	0–249	1,000	0–249K	0–17,227
TOTAL	419–1,260		703,000–2.87M	100,000–408,600

* **Note:** Total cost to hold product is result of # of Establishments affected * cost/Est to store product.

(2) Residue Testing

The National Residue Program (NRP) consists of two sampling plans: Domestic and import. These plans are further divided to facilitate the management of chemical residues such as veterinary drugs, pesticides, and environmental contaminants in meat, poultry, and egg products. The domestic sampling plan includes both a scheduled sampling program that is derived statistically by an interagency (FSIS, EPA, and FDA) technical team and by inspector generated sampling in which samples are collected by in-plant veterinarians when they suspect an animal presented for slaughter may have violative levels of chemical residues. The import re-inspection sampling plan verifies the equivalence of inspection systems of exporting countries. FSIS inspectors collect samples randomly from imported products, and the intensity of sampling increases when products fail to meet U.S. requirements.

Residue Costs

In CY 2008, under the National Residue Plan, there were 22,709 FSIS residue samples completed. An additional 135,552 inspector-generated samples were taken. The number of samples includes those taken in-plant, taken from show animals, taken by inspectors or OPEER personnel as part of their regular work, and as part of state programs.

The average range of days between a sample arriving at the lab and the report being available is generally 3–10 working days. Some screen results are available the same day by Kidney Inhibition Swab (KIS), tests, while other tests may take longer than 10 days.

The Agency does not anticipate any substantial cost impact from additional storage space requirements for FSIS residue testing. For establishment residue testing, the establishment as part of its HACCP program should already be holding any tested carcasses.

Products will have a reduced shelf-life at retail as a result of carcasses being held pending FSIS and establishment test results. Some beef product that has been residue tested and held for three to ten days will lose freshness and will need to be frozen. Over the past nine years, on average, the difference in fresh

[19] The American Meat Institute (AMI) survey dated April, 2007, conducted for the *Lm* Final Regulatory Impact Analysis shows various amounts reported for spoilage due to products exceeding shelf-life prior to obtaining test results or diminished shelf-life after obtaining test results for Lm. Large establishments report a range of $0–$50,000 or on average $3,571 and a median of $0; small establishments report a range of $0–$150,000 or on average $5,750 and median of $0; and very small establishments report a range of $0–$5,000, or on average $450 and a median of $0. Only 16 very small and 75 small establishments responded to the survey. There are 2,900 very small and 2,366 small federally inspected establishments from PBIS data.

vs. frozen beef prices is approximately $0.054 a pound.[20] The worst case scenario for loss of business revenue for dairy cows, used for beef estimation purposes, would be approximately $39,500.[21] While these lost revenue estimates are a worst case scenario, we also estimate the range for reduced beef sales to be between $19,700 and $39,500.

Additionally, roaster pig carcasses could go rancid and would also need to be frozen. Some product will go to secondary markets, such as renderers, pet foods, and fertilizer product. For roaster pigs, we estimate a worst case scenario loss of business at approximately $92,400.[22] The lower estimate for roaster pigs is $46,200.

TABLE 8—LOSS OF REVENUES FOR DOMESTIC BEEF AND ROASTER PIGS DUE TO RESIDUE TEST AND HOLD POLICY

Establishment size	Beef number of establishments	Beef $ lost	Roaster pigs number of establishments	Roaster pigs $ lost
Large	132	$1,264	4	$601
Small	810	7,900	85	13,860
Very Small	3164	30,099	467	77,616
Unknown	25	237	2	323
TOTAL	4131	39,500	558	92,400

Source of data: Data Analysis Integration Group (DAIG) and Office of Policy and Program Development (OPPD)/Risk Management Division.

B. Imported Product

Imported Re-inspection Sampling Plan

Import Inspection Personnel are to sample imported ready-to-eat (RTE) meat and poultry products produced in foreign establishments. Analyses will include *Lm* and *Salmonella* testing for all RTE products, and *E. coli* O157:H7 for cooked beef patties and dry or semi-dry fermented sausages.

Ready-to-eat cooked meat or poultry product is subjected to microbial sampling at the port-of-entry. This includes any product that is intended to be consumed without any further safety preparation steps.

Table 9 describes the two different types of tests that are conducted on imported product, (1) micro testing, and (2) residue testing (column 1). Column 2 shows the number of samples where product was held, while column 3 shows the number of samples where the product was not held. Column 4 shows the number of samples for which the available data do not show whether or not the product was held. Column 5 is the total of all tests taken on imported product (sum of columns 2, 3 & 4). Column 6 is the percentage of tested product that is currently being held.

TABLE 9—PERCENT OF IMPORTED PRODUCT HELD THAT HAS BEEN FSIS TESTED (BY LOTS)

Type (1)	Held (2)	Not held (3)	Not indicated (4)	Total (5)	% Age product currently held (6)
Micro	1994	1799	88	3881	51.4
Residues	2320	2490	493	5303	43.7

Source: FSIS International Policy Division.

Table 10 shows the type of samples (column 1) and the number of FSIS samples taken (column 2). The average lot size derived by dividing the total pounds of product presented for import in 2008 by the total lots presented for import in 2008 is shown in column 3 (3,270,643,817/210,592). Column 4 and 5 are percentage of product currently held and percentage of product to be held. Column 6 and 7 represent the total pounds to be held and the cost of holding that product. The cost of holding imported product when this policy becomes effective will range from approximately $757,000 to $832,000.[23]

TABLE 10—COST TO HOLD IMPORTED FSIS TESTED PRODUCT

Type (1)	Number of FSIS samples (2)	Average lot size (3)	% Product now held (4)	Additional % age of product to be held * (5)	Total pounds to be held (6)	Cost for holding product (7)
Microbial	3881	15,530	51.4	48.6	29,292,158	$292,922

[20] Beef price data provided by the Economic Research Service, USDA. The data is for 90% lean beef, not carcasses and can be interpreted as cents per pound or dollars per cwt of product.

[21] Estimation of worst case business loss for dairy cows: total number of animals selected for dairy cows (300) * 4 (number of chemicals sampled) * average lbs of animal (609) = total lbs to be held * price difference per lb. from fresh to frozen ($0.054).

[22] Estimation of worst case business loss for roaster pigs: total number of animals selected for roaster pigs 300 *4 (number of chemicals sampled) * average lbs of animal (70) = total lbs to be held * price per lb. ($1.10).

[23] The storage cost data was not robust, therefore a cost + 10% range was cited. Adding the 10% leads to a storage cost of $832,242.

TABLE 10—COST TO HOLD IMPORTED FSIS TESTED PRODUCT—Continued

Type	Number of FSIS samples	Average lot size	% Product now held	Additional % age of product to be held *	Total pounds to be held	Cost for holding product
(1)	(2)	(3)	(4)	(5)	(6)	(7)
Residue	5303	15,530	43.7	56.3	46,366,197	463,662
Total						756,584

Note: Cost is based on storage of product for up to 30 days @ $.01/pound.
Source: FSIS—International Policy Division.
* Column 5 is the additional percentage of product that will need to be held once this policy becomes effective. (100%—column 4 % age).

Summary of Annual Costs

Total Domestic Product—$100,000–$408,600.

Loss of Business Revenue—$66,000–$131,900.

Total Import Product—$757,000–$832,000.

Total Cost: $923,000–$1.4 million.

Estimated annual benefits range between $12.8 million and $37.8 million and exceed the estimated costs. Annual net benefits range between $11.9 million and $36.4 million.

USDA Nondiscrimination Statement

The U.S. Department of Agriculture (USDA) prohibits discrimination in all its programs and activities on the basis of race, color, national origin, gender, religion, age, disability, political beliefs, sexual orientation, and marital or family status. (Not all prohibited bases apply to all programs.) Persons with disabilities who require alternative means for communication of program information (Braille, large print, or audiotape) should contact USDA's Target Center at (202) 720–2600 (voice and TTY).

To file a written complaint of discrimination, write USDA, Office of the Assistant Secretary for Civil Rights, 1400 Independence Avenue SW., Washington, DC 20250–9410 or call (202) 720–5964 (voice and TTY). USDA is an equal opportunity provider and employer.

Additional Public Notification

FSIS will announce this rule online through the FSIS Web page located at: *http://www.fsis.usda.gov/regulations_&_policies/Federal_Register_Notices/index.asp*

FSIS will also make copies of this **Federal Register** publication available through the FSIS Constituent Update, which is used to provide information regarding FSIS policies, procedures, regulations, **Federal Register** notices, FSIS public meetings, and other types of information that could affect or would be of interest to constituents and stakeholders. The Update is communicated via Listserv, a free electronic mail subscription service for industry, trade groups, consumer interest groups, health professionals, and other individuals who have asked to be included. The Update is also available on the FSIS Web page. In addition, FSIS offers an electronic mail subscription service which provides automatic and customized access to selected food safety news and information. This service is available at *http://www.fsis.usda.gov/News_&_Events/Email_Subscription/.* Options range from recalls to export information to regulations, directives and notices. Customers can add or delete subscriptions themselves, and have the option to password protect their accounts.

Done at Washington, DC, on: November 30, 2012.

Alfred V. Almanza,

Administrator.

[FR Doc. 2012–29516 Filed 12–7–12; 8:45 am]

BILLING CODE 3410–DM–P

DEPARTMENT OF AGRICULTURE

Forest Service

Lake Tahoe Basin Federal Advisory Committee (LTBFAC)

AGENCY: Forest Service, USDA.

ACTION: Notice of meeting.

SUMMARY: The Lake Tahoe Basin Federal Advisory Committee will meet in South Lake Tahoe, California. This Committee, established by the Secretary of Agriculture on December 15, 1998 (64 FR 2876), is chartered to provide advice to the Secretary on implementing the terms of the Federal Interagency Partnership on the Lake Tahoe Region and other matters raised by the Secretary. The purpose of the meeting is to present updated information on Aquatic Invasive Species, fuels treatments, and biomass opportunities in the Lake Tahoe Basin. The meeting is open to the public.

DATES: The meeting will be held January 10, 2013 beginning at 9:00 a.m. and ending at 12:00 p.m.

ADDRESSES: The meeting will be held at the Lake Tahoe Basin Management Unit, Forest Service, 35 College Drive, South Lake Tahoe, CA 96150. The public may access the meeting via teleconference by calling toll-free 1–888–858–2144, access code 4849484. Written comments may be submitted as described under Supplementary Information. All comments, including names and addresses when provided, are placed in the record and are available for public inspection and copying. The public may inspect comments received at 35 College Drive, South Lake Tahoe, CA 96150. Please call ahead to 530–543–2773 to facilitate entry into the building to view comments.

FOR FURTHER INFORMATION CONTACT: Arla Hains, Lake Tahoe Basin Management Unit, Forest Service, 35 College Drive, South Lake Tahoe, CA 96150, (530) 543–2773, (530) 543–0956 (TTY), *ashains@fs.fed.us*. Individuals who use telecommunication devices for the deaf (TDD) may call the Federal Information Relay Service (FIRS) at 1–800–877–8339 between 8:00 a.m. and 8:00 p.m., Eastern Standard Time, Monday through Friday.

SUPPLEMENTARY INFORMATION: The following business will be conducted: The LTBFAC will receive a recap on the history and good work done by the 2012–2013 committee, follow up on the Aquatic Invasive Species letter, and further develop a letter to the Secretary of Agriculture discussing the capacity of collaboration and decision making in the Lake Tahoe Basin. The full agenda may be previewed at *http://www.fs.usda.gov/goto/ltbmu/LTFAC.* Anyone who would like to bring related matters to the attention of the committee may file written statements with the committee staff before the meeting. The agenda will include time for people to

make oral statements of three minutes or less. Individuals wishing to make an oral statement should request in writing by January 3, 2013 to be scheduled on the agenda. Written comments must be sent to 35 College Drive, South Lake Tahoe, CA 96150, or by email to *ashains@fs.fed.us*, or via facsimile to (530) 543–2937 by January 3, 2013. A summary of the meeting will be posted at *http://www.fs.usda.gov/goto/ltbmu/LTFAC* where the minutes will be posted within 21 days of the meeting.

Meeting Accommodations: If you require sign language interpreting, assistive listening devices or other reasonable accommodation please request this in advance of the meeting by contacting the person listed in the section titled For Further Information Contact. All reasonable accommodation requests are managed on a case by case basis.

Dated: December 4, 2012.

Nancy J. Gibson,

Forest Supervisor.

[FR Doc. 2012–29718 Filed 12–7–12; 8:45 am]

BILLING CODE 3410–11–P

DEPARTMENT OF AGRICULTURE

Forest Service

Newspapers Used for Publication of Legal Notices in the Southwestern Region, Which Includes Arizona, New Mexico, and Parts of Oklahoma and Texas

AGENCY: Forest Service, USDA.

ACTION: Notice.

SUMMARY: This notice lists the newspapers that will be used by all Ranger Districts, Grasslands, Forests, and the Regional Office of the Southwestern Region to publish legal notices required under 36 CFR parts 215, 219, and 218. The intended effect of this action is to inform interested members of the public which newspapers the Forest Service will use to publish notices of proposed actions and notices of decision. This will provide the public with constructive notice of Forest Service proposals and decisions, provide information on the procedures to comment or appeal, and establish the date that the Forest Service will use to determine if comments or appeals were timely.

DATES: Publication of legal notices in the listed newspapers will begin on the date of this publication and continue until further notice.

ADDRESSES: Margaret Van Gilder, Regional Appeals Coordinator, Forest Service, Southwestern Region; 333 Broadway SE., Albuquerque, NM 87102–3498.

FOR FURTHER INFORMATION CONTACT: Margaret Van Gilder, Regional Appeals Coordinator; (505) 842–3223.

SUPPLEMENTARY INFORMATION: The administrative procedures at 36 CFR parts 215, 219, and 218 require the Forest Service to publish notices in a newspaper of general circulation. The content of the notices is specified in 36 CFR parts 215, 219 and 218. In general, the notices will identify: the decision or project, by title or subject matter; the name and title of the official making the decision; how to obtain additional information; and where and how to file comments or appeals. The date the notice is published will be used to establish the official date for the beginning of the comment or appeal period. Where more than one newspaper is listed for any unit, the first newspaper listed is the primary newspaper of record of which publication date shall be used for calculating the time period to file comment, appeal or an objection.

Southwestern Regional Office

Regional Forester

Notices of Availability for Comment and Decisions and Objections affecting New Mexico Forests:—''*Albuquerque Journal*'', Albuquerque, New Mexico, for National Forest System Lands in the State of New Mexico and for any projects of Region-wide impact.

Regional Forester Notices of Availability for Comment and Decisions and Objections affecting Arizona Forests: —''*The Arizona Republic*'', Phoenix, Arizona, for National Forest System lands in the State of Arizona and for any projects of Region-wide impact.

Regional Forester Notices of Availability for Comment and Decisions and Objections affecting National Grasslands in New Mexico, Oklahoma, and Texas are listed by Grassland and location as follows: Kiowa National Grassland notices published in:—''*Union County Leader*'', Clayton New Mexico. Rita Blanca National Grassland in Cimarron County, Oklahoma notices published in:—''*Boise City News*'', Boise City, Oklahoma. Rita Blanca National Grassland in Dallam County, Texas notices published in:—''*The Dalhart Texan*'', Dalhart, Texas. Black Kettle National Grassland in Roger Mills County, Oklahoma notices published in:—''*Cheyenne Star*'', Cheyenne, Oklahoma. Black Kettle National Grassland in Hemphill County, Texas notices published in:—''*The Canadian Record*'', Canadian, Texas. McClellan Creek National Grassland in Gray County, Texas notices published in:—''*The Pampa News*'', Pampa, Texas.

Arizona National Forests

Apache-Sitgreaves National Forests

Notices for Availability for Comments, Decisions and Objections by Forest Supervisor, Alpine Ranger District, Black Mesa Ranger District, Lakeside Ranger District, and Springerville Ranger District are published in:—''*The White Mountain Independent*'', Show Low and Navajo County, Arizona.

Clifton Ranger District Notices are published in:—''*Copper Era*'', Clifton, Arizona.

Coconino National Forest

Notices for Availability for Comments, Decisions and Objections by Forest Supervisor, Mogollon Rim Ranger District, Mormon Lake Ranger District, and Peaks Ranger District are published in: —''*Arizona Daily Sun*'', Flagstaff, Arizona.

Red Rock Ranger District Notices are published in:—''*Red Rock News*'', Sedona, Arizona.

Coronado National Forest

Notices for Availability for Comments, Decisions and Objections by Forest Supervisor and Santa Catalina Ranger District are published in:—''*The Arizona Daily Star*'', Tucson, Arizona.

Douglas Ranger District Notices are published in:—''*Daily Dispatch*'', Douglas, Arizona.

Nogales Ranger District Notices are published in:—''*Nogales International*'', Nogales, Arizona.

Sierra Vista Ranger District Notices are published in:—''*Sierra Vista Herald*'', Sierra Vista, Arizona.

Safford Ranger District Notices are published in:—''*Eastern Arizona Courier*'', Safford, Arizona.

Kaibab National Forest

Notices for Availability for Comments, Decisions and Objections by Forest Supervisor, North Kaibab Ranger District, Tusayan Ranger District, and Williams Ranger District Notices are published in:—''*Arizona Daily Sun*'', Flagstaff, Arizona.

Prescott National Forest

Notices for Availability for Comments, Decisions and Objections by Forest Supervisor, Bradshaw Ranger District, Chino Valley Ranger District and Verde Ranger District are published in:—''*Daily Courier*'', Prescott, Arizona.

Tonto National Forest

Notices for Availability for Comments, Decisions, and Objections by Forest Supervisor are published in:—''*Arizona Capitol Times*'', in Phoenix, Arizona.

Cave Creek Ranger District Notices are published in:—''*Arizona Capitol Times*'', in Phoenix, Arizona.

Globe Ranger District Notices are published in:—''*Arizona Silver Belt*'', Globe, Arizona.

Mesa Ranger District Notices are published in:—''*Arizona Capitol Times*'', in Phoenix, Arizona.

Payson Ranger District, Pleasant Valley Ranger District and Tonto Basin Ranger District Notices are published in:—''*Payson Roundup*'', Payson, Arizona.

New Mexico National Forests

Carson National Forest

Notices for Availability for Comments, Decisions and Objections by Forest Supervisor, Camino Real Ranger District, Tres Piedras Ranger District and Questa Ranger District are published in: —*''The Taos News'',* Taos, New Mexico.

Canjilon Ranger District and El Rito Ranger District Notices are published in: —*''Rio Grande Sun'',* Espanola, New Mexico.

Jicarilla Ranger District Notices are published in: —*''Farmington Daily Times'',* Farmington, New Mexico.

Cibola National Forest and National Grasslands

Notices for Availability for Comments, Decisions and Objections by Forest Supervisor affecting lands in New Mexico, except the National Grasslands are published in:—''*Albuquerque Journal'',* Albuquerque, New Mexico.

Forest Supervisor Notices affecting National Grasslands in New Mexico, Oklahoma and Texas are published by grassland and location as follows: Kiowa National Grassland in Colfax, Harding, Mora and Union Counties, New Mexico published in:—*''Union County Leader''*, Clayton, New Mexico. Rita Blanca National Grassland in Cimarron County, Oklahoma published in:—*''Boise City News'',* Boise City, Oklahoma. Rita Blanca National Grassland in Dallam County, Texas published in:—*''The Dalhart Texan'',* Dalhart, Texas. Black Kettle National Grassland, in Roger Mills County, Oklahoma published in:—*''Cheyenne Star''*, Cheyenne, Oklahoma. Black Kettle National Grassland, in Hemphill County, Texas published in:—*''The Canadian Record'',* Canadian, Texas. McClellan Creek National Grassland published in:—*''The Pampa News'',* Pampa, Texas.

Mt. Taylor Ranger District Notices are published in:—*''Cibola County Beacon'',* Grants, New Mexico.

Magdalena Ranger District Notices are published in:—*''Defensor-Chieftain'',* Socorro, New Mexico.

Mountainair Ranger District Notices are published in:—*''Mountain View Telegraph'',* Moriarity, New Mexico.

Sandia Ranger District Notices are published in:—*''Albuquerque Journal''*, Albuquerque, New Mexico.

Kiowa National Grassland Notices are published in:—*''Union County Leader''*, Clayton, New Mexico.

Rita Blanca National Grassland Notices in Cimarron County, Oklahoma are published in:—*''Boise City News''*, Boise City, Oklahoma while Rita Blanca National Grassland Notices in Dallam County, Texas are published in:—*''Dalhart Texan''*, Dalhart, Texas.

Black Kettle National Grassland Notices in Roger Mills County, Oklahoma are published in:—*''Cheyenne Star''*, Cheyenne, Oklahoma, while Black Kettle National Grassland Notices in Hemphill County, Texas are published in:—*''The Canadian Record''*, Canadian, Texas.

McClellan Creek National Grassland Notices are published in:—*''The Pampa News''*, Pampa, Texas.

Gila National Forest

Notices for Availability for Comments, Decisions and Objections by Forest Supervisor, Quemado Ranger District, Reserve Ranger District, Glenwood Ranger District, Silver City Ranger District and Wilderness Ranger District are published in:—*''Silver City Daily Press''*, Silver City, New Mexico.

Black Range Ranger District Notices are published in:—*''The Herald''*, Truth or Consequences, New Mexico.

Lincoln National Forest

Notices for Availability for Comments, Decisions and Objections by Forest Supervisor and the Sacramento Ranger District are published in:—*''Alamogordo Daily News''*, Alamogordo, New Mexico.

Guadalupe Ranger District Notices are published in:—*''Carlsbad Current Argus''*, Carlsbad, New Mexico.

Smokey Bear Ranger District Notices are published in:—*''Ruidoso News''*, Ruidoso, New Mexico.

Santa Fe National Forest

Notices for Availability for Comments, Decisions and Objections by Forest Supervisor, Coyote Ranger District, Cuba Ranger District, Espanola Ranger District, Jemez Ranger District and Pecos-Las Vegas Ranger District are published in:—*''Albuquerque Journal''*, Albuquerque, New Mexico.

Dated: November 27, 2012.

Gilbert Zepeda,

Deputy Regional Forester, Southwestern Region.

[FR Doc. 2012–29551 Filed 12–7–12; 8:45 am]

BILLING CODE 3410–11–P

DEPARTMENT OF AGRICULTURE

National Agricultural Statistics Service

Notice of Intent To Request Revision and Extension of a Currently Approved Information Collection

AGENCY: National Agricultural Statistic Service, USDA.

ACTION: Notice and request for comments.

SUMMARY: This notice announced the National Agricultural Statistic Service's intentions to seek OMB's approval to renew the Agricultural Prices information collection. The notice was published in the **Federal Register** on November 16, 2012.

FOR FURTHER INFORMATION CONTACT: Joseph T. Reilly, 202–720–4333.

Correction

In the **Federal Register** of November 16, 2012 in FR Doc. 2012–27634, on page 68732 in the supplementary information, abstract section, correct, Para two, to read as follows:

The Agricultural Prices surveys provide data on the prices received by farmers and prices paid by them for production goods and services, NASS estimates based on these surveys are used as a Principal Economic Indicator of the United States.

Yvette Anderson,

Federal Register Liaison Officer for ARS, ERS, and NASS.

[FR Doc. 2012–29690 Filed 12–7–12; 8:45 am]

BILLING CODE P

BROADCASTING BOARD OF GOVERNORS

Sunshine Act Meeting

DATE AND TIME: Thursday, December 14, 2012, 1:00 p.m. EST.

PLACE: Cohen Building, Room 3321, 330 Independence Ave. SW., Washington, DC 20237.

SUBJECT: Notice of Meeting of the Broadcasting Board of Governors.

SUMMARY: The Broadcasting Board of Governors (BBG) will be meeting at the

time and location listed above. At the meeting, the BBG will receive and consider a report and recommendations from the Governance Committee regarding the creation of the position of Chief Executive Officer of United States international broadcasting, receive and consider a progress report from the Strategy and Budget Committee, and consider two resolutions honoring employees for their service. The BBG will recognize the anniversaries of Agency language services, receive a report regarding a recent official trip to Burma, receive a budget update, and receive reports from the International Broadcasting Bureau Director, the Technology, Services and Innovation Director, the Communications and External Affairs Director, the Strategy and Development Director, the VOA Director, the Office of Cuba Broadcasting Director, and the Presidents of Radio Free Europe/Radio Liberty, Radio Free Asia, and the Middle East Broadcasting Networks.

The public may attend this meeting in person at the address listed above as seating capacity permits. Member of the public seeking to attend the meeting in person must register at *http://bbgboardmeetingdec2012.eventbrite.com* by 12:00 p.m. (EST) on December 13. For more information, please contact BBG Public Affairs at (202) 203–4400 or by email at *pubaff@bbg.gov.* This meeting will also be available for public observation via streamed webcast, both live and on-demand, on the BBG's public Web site at *www.bbg.gov.* Information regarding this meeting, including any updates or adjustments to its starting time, can also be found on the Agency's public Web site.

CONTACT PERSON FOR MORE INFORMATION: Persons interested in obtaining more information should contact Paul Kollmer-Dorsey at (202) 203–4545.

Paul Kollmer-Dorsey,

Deputy General Counsel.

[FR Doc. 2012–29833 Filed 12–6–12; 11:15 am]

BILLING CODE 8610–01–P

DEPARTMENT OF COMMERCE

Submission for OMB Review; Comment Request

The Department of Commerce will submit to the Office of Management and Budget (OMB) for clearance the following proposal for collection of information under the provisions of the Paperwork Reduction Act (44 U.S.C. Chapter 35).

Agency: Bureau of Industry and Security.

Title: Offsets in Military Exports.

OMB Control Number: 0694–0084.

Form Number(s): N/A.

Type of Request: Regular submission (extension of a currently approved collection).

Burden Hours: 360.

Number of Respondents: 30.

Average Hours per Response: 12 hours.

Needs and Uses: This collection of information is required by the Defense Production Act (DPA). The DPA requires U.S. firms to furnish information to the Department of Commerce regarding offset agreements exceeding $5,000,000 in value associated with sales of weapon systems or defense-related items to foreign countries or foreign firms. Offsets are industrial or commercial compensation practices required as a condition of purchase in either government-to-government or commercial sales of defense articles and/or defense services as defined by the Arms Export Control Act and the International Traffic in Arms Regulations. Such offsets are required by most major trading partners when purchasing U.S. military equipment or defense related items.

Affected Public: Business and other for-profit organizations.

Frequency: On occasion.

Respondent's Obligation: Mandatory.

OMB Desk Officer: Jasmeet Seehra, 395–3123.

Copies of the above information collection proposal can be obtained by calling or writing Jennifer Jessup, Departmental Paperwork Clearance Officer, (202) 482–0336, Department of Commerce, Room 6616, 14th and Constitution Avenue NW., Washington, DC 20230 (or via the *Internet at jjessup@doc.gov*).

Written comments and recommendations for the proposed information collection should be sent within 30 days of publication of this notice to Jasmeet Seehra, Office of Management and Budget (OMB), by email to *jseehra@omb.eop.gov,* or by fax to (202) 395–7285.

Dated: December 4, 2012.

Gwellnar Banks,

Management Analyst, Office of the Chief Information Officer.

[FR Doc. 2012–29696 Filed 12–7–12; 8:45 am]

BILLING CODE 3510–33–P

DEPARTMENT OF COMMERCE

Foreign-Trade Zones Board

[Order No. 1871]

Approval for Expansion of Manufacturing Authority; Foreign-Trade Subzone 41H; Mercury Marine (Marine Propulsion Products); Fond du Lac and Oshkosh, WI

Pursuant to its authority under the Foreign-Trade Zones Act of June 18, 1934, as amended (19 U.S.C. 81a–81u), the Foreign-Trade Zones Board (the Board) adopts the following Order:

Whereas, the Port of Milwaukee, grantee of Foreign-Trade Zone 41, has requested an expansion of the scope of manufacturing authority on behalf of Mercury Marine, operator of Subzone 41H at the Mercury Marine facilities in Fond du Lac and Oshkosh, Wisconsin (FTZ Docket 82–2011, filed 12–19–2011);

Whereas, notice inviting public comment has been given in the **Federal Register** (76 FR 80331–80332, 12–23–2011) and the application has been processed pursuant to the FTZ Act and the Board's regulations; and,

Whereas, the Board adopts the findings and recommendations of the examiner's report, and finds that the requirements of the FTZ Act and Board's regulations are satisfied, and that the proposal is in the public interest;

Now, therefore, the Board hereby orders:

The application to expand scope of FTZ manufacturing authority to include additional finished products and foreign-origin components, as described in the application and **Federal Register** notice, is approved, subject to the FTZ Act and the Board's regulations, including Section 400.13.

Signed at Washington, DC, this 30th day of November 2012.

Ronald K. Lorentzen,

Acting Assistant Secretary of Commerce for Import Administration, Alternate Chairman, Foreign-Trade Zones Board.

ATTEST:

Andrew McGilvray,

Executive Secretary.

[FR Doc. 2012–29762 Filed 12–7–12; 8:45 am]

BILLING CODE 3510–DS–P

DEPARTMENT OF COMMERCE

Foreign-Trade Zones Board

[Order No. 1869]

Approval for Manufacturing Authority; Foreign-Trade Zone 277; Sub-Zero, Inc. (Refrigerators and Freezers); Goodyear, AZ

Pursuant to its authority under the Foreign-Trade Zones Act of June 18, 1934, as amended (19 U.S.C. 81a–81u) (the Act), the Foreign-Trade Zones Board (the Board) adopts the following Order:

Whereas, the Greater Maricopa County Foreign Trade Zone, Inc., grantee of FTZ 277, has requested manufacturing authority on behalf of Sub-Zero, Inc., within FTZ 277—Site 3, Goodyear, Arizona (FTZ Docket 73–2011, filed 11–10–2011);

Whereas, notice inviting public comment has been given in the **Federal Register** (76 FR 70957, 11–16–2011) and the application has been processed pursuant to the FTZ Act and the Board's regulations; and,

Whereas, the Board adopts the findings and recommendations of the examiner's report, and finds that the requirements of the FTZ Act and the Board's regulations are satisfied, and that the proposal is in the public interest;

Now, therefore, the Board hereby orders:

The application for manufacturing authority under zone procedures within FTZ 277 on behalf of Sub-Zero, Inc., as described in the application and **Federal Register** notice, is approved, subject to the FTZ Act and the Board's regulations, including Section 400.13.

Signed at Washington, DC, this 30th day of November 2012.

Ronald K. Lorentzen,

Acting Assistant Secretary for Import Administration, Alternate Chairman, Foreign-Trade Zones Board.

Andrew McGilvray,

Executive Secretary.

[FR Doc. 2012–29769 Filed 12–7–12; 8:45 am]

BILLING CODE P

DEPARTMENT OF COMMERCE

Foreign-Trade Zones Board

[B–62–2012]

Authorization of Export Production Activity, Foreign-Trade Subzone 12A, TST NA Trim, LLC (Fabric/Leather Lamination and Cutting), Hidalgo, TX

On July 25, 2012, the McAllen Foreign Trade Zone, Inc., grantee of FTZ 12, submitted a notification of proposed production activity to the Foreign-Trade Zones (FTZ) Board on behalf of TST NA Trim, LLC, within Subzone 12A, in Hidalgo, Texas.

The notification was processed in accordance with the regulations of the FTZ Board (15 CFR part 400), including notice in the **Federal Register** inviting public comment (77 FR 48960, 8–15–2012). The FTZ Board has determined that no further review of the activity is warranted at this time. The production activity described in the notification is authorized, subject to the FTZ Act and the Board's regulations, including Section 400.14, and further subject to a restriction requiring that all foreign-status merchandise admitted to the subzone must be re-exported.

Dated: November 30, 2012.

Andrew McGilvray,

Executive Secretary.

[FR Doc. 2012–29766 Filed 12–7–12; 8:45 am]

BILLING CODE P

DEPARTMENT OF COMMERCE

International Trade Administration

[A–427–801, A–428–801, A–475–801]

Ball Bearings and Parts Thereof From France, Germany, and Italy: Final Results of Antidumping Duty Administrative Reviews; 2010–2011

AGENCY: Import Administration, International Trade Administration, Department of Commerce.

SUMMARY: On June 5, 2012, the Department of Commerce (the Department) published the preliminary results of the administrative reviews of the antidumping duty orders on ball bearings and parts thereof from France, Germany, and Italy. On October 16, 2012, the Department released its post-preliminary analysis in these reviews. For these final results, we continue to find that sales of the subject merchandise have not been made at prices below normal value.

DATES: *Effective Date:* December 10, 2012.

FOR FURTHER INFORMATION CONTACT: Dustin Ross, AD/CVD Operations, Office 1, Import Administration, International Trade Administration, U.S. Department of Commerce, 14th Street and Constitution Avenue NW., Washington, DC 20230; telephone: (202) 482–0747.

SUPPLEMENTARY INFORMATION:

Background

On June 5, 2012, the Department published the preliminary results of the administrative reviews of the antidumping duty orders on ball bearings and parts thereof from France, Germany, and Italy.[1] The period of review is May 1, 2010, through April 30, 2011.

We invited interested parties to comment on the *Preliminary Results.* We received case and rebuttal briefs from various parties to the proceedings.

On October 16, 2012, we issued a post-preliminary analysis in which we addressed the targeted dumping allegations made by the petitioner and invited comments from interested parties.[2] We received additional briefs from interested parties commenting on the *Post-Preliminary Analysis.*

On July 5, 2012, the petitioner requested hearings with respect to these reviews on ball bearings and parts thereof from France and Germany. The petitioner and SKF Italy requested a hearing with respect to the review on ball bearings from Italy. On November 14, 2012, the petitioner withdrew its hearing request with respect to France and Germany. On November 21, 2012, the Department conducted a hearing on the review of ball bearings and parts thereof from to Italy.

The Department has conducted these administrative reviews in accordance with section 751 of the Tariff Act of 1930, as amended (the Act).

Scope of the Orders

The products covered by the orders are ball bearings and parts thereof. Imports of these products are classified under the following Harmonized Tariff Schedule of the United States (HTSUS) subheadings: 3926.90.45, 4016.93.10, 4016.93.50, 6909.19.50.10, 8414.90.41.75, 8431.20.00, 8431.39.00.10, 8482.10.10, 8482.10.50, 8482.80.00, 8482.91.00, 8482.99.05, 8482.99.35, 8482.99.25.80, 8482.99.65.95, 8483.20.40, 8483.20.80, 8483.30.40, 8483.30.80, 8483.50.90, 8483.90.20, 8483.90.30, 8483.90.70, 8708.50.50, 8708.60.50, 8708.60.80, 8708.93.30, 8708.93.60.00, 8708.99.06, 8708.99.31.00, 8708.99.40.00, 8708.99.49.60, 8708.99.58, 8708.99.80.15, 8708.99.80.80, 8803.10.00, 8803.20.00, 8803.30.00, 8803.90.30, 8803.90.90, 8708.30.50.90, 8708.40.75.70, 8708.40.75.80,

[1] *See Ball Bearings and Parts Thereof From France, Germany, and Italy: Preliminary Results of Antidumping Duty Administrative Reviews and Rescission of Antidumping Duty Administrative Reviews in Part,* 77 FR 33159 (June 5, 2012) (*Preliminary Results*).

[2] *See* Memorandum to Paul Piquado, ''2010/2011 Reviews of the Antidumping Duty Orders on Ball Bearings and Parts Thereof from France, Germany, and Italy: Post-Preliminary Analysis and Calculation Memorandum'' (*Post-Preliminary Analysis*).

8708.50.79.00, 8708.50.89.00, 8708.50.91.50, 8708.50.99.00, 8708.70.60.60, 8708.80.65.90, 8708.93.75.00, 8708.94.75, 8708.95.20.00, 8708.99.55.00, 8708.99.68, and 8708.99.81.80. Although the HTSUS item numbers above are provided for convenience and customs purposes, the written descriptions of the scope of the orders remain dispositive.

Analysis of the Comments Received

All issues raised in the case briefs by parties to these administrative reviews are addressed in the ''Issues and Decision Memorandum'' (Decision Memorandum) from Gary Taverman, Senior Advisor for Antidumping and Countervailing Duty Operations, to Paul Piquado, Assistant Secretary for Import Administration, dated concurrently with this notice, which is hereby adopted by this notice. A list of the issues which parties have raised and to which we have responded is in the Decision Memorandum and attached to this notice as an Appendix. The Decision Memorandum is a public document and is on file electronically via Import Administration's Antidumping and Countervailing Duty Centralized Electronic Service System (''IA ACCESS''). IA ACCESS is available to registered users at *http://iaaccess.trade.gov* and it is available to all parties in the Central Records Unit (''CRU''), room 7046 of the main Department of Commerce building. In addition, a complete version of the Decision Memorandum can be accessed directly on the internet at *http://www.trade.gov/ia/frn/index.html.* The signed Decision Memorandum and the electronic versions of the Decision Memorandum are identical in content.

Rates for Non-Selected Companies

Based on available resources, we selected certain companies for individual examination of their sales of the subject merchandise to the United States during the period of review as permitted under section 777A(c)(2) of the Act. For a detailed discussion on the selection of the respondents for individual examination, *see Preliminary Results,* 77 FR at 33160 through 33161. For the final results, we have not changed the rates we applied to respondents not selected for individual examination.

Rescission of Review in Part

In accordance with 19 CFR 351.213(d), the Department will rescind an administrative review in part ''if a party that requested a review withdraws the request within 90 days of the date of the publication of notice of initiation of the requested review.'' On September 7, 2011, Intertechnique SAS (''Intertechnique'') timely withdrew its request for an administrative review. However, in the *Preliminary Results* we inadvertently did not include Intertechnique in the list of companies for which the review was rescinded. Instead, we preliminarily assigned Intertechnique the rate for all non-selected respondents from France. Because there are no other requests for review for Intertechnique, we are rescinding the review with respect to Intertechnique, effective June 5, 2012, the date of publication of the *Preliminary Results,* in accordance with 19 CFR 351.213(d)(1).

Changes Since the Preliminary Results

Based on our analysis of the comments received, we have corrected programming and other errors in the weighted-average dumping margins which we included in the *Preliminary Results,* where applicable. These changes, however, did not affect the final weighted-average dumping margins for the reviewed respondents. A detailed discussion of each correction we made is in the company-specific analysis memoranda dated concurrently with this notice, which are on file electronically via IA ACCESS and in the CRU of the main Commerce building.

Sales Below Cost in the Home Market

Pursuant to section 773(b)(1) of the Act, the Department disregarded sales in the home market that failed the cost-of-production test for the following firms for these final results of reviews: France—NTN–SNR; Germany—myonic GmbH; Italy—Schaeffler Italia S.r.l./WPB Water Pump Bearing GmbH & Co. KG/Schaeffler Italia SpA/The Schaeffler Group and SKF Industries S.p.A./Somecat S.p.A./SKF RIV–SKF Officine di Villar Perosa S.p.A.

Final Results of the Reviews

We determine that the following weighted-average dumping margins on ball bearings and parts thereof exist for the period May 1, 2010, through April 30, 2011:

Company	Margin (percent)
France:	
Audi AG	0.00
Bosch Rexroth SAS	0.00
Caterpillar Group Services S.A	0.00
Caterpillar Materials Routiers S.A.S	0.00
Caterpillar S.A.R.L	0.00
Perkins Engines Company Limited	0.00
SNECMA	0.00
NTN–SNR	0.00
Volkswagen AG	0.00
Volkswagen Zubehor GmbH	0.00
Germany:	
Bayerische Motoren Werke AG	0.00
Bosch Rexroth AG	0.00
BSH Bosech und Siemens Hausgerate GmbH	0.00
Caterpillar S.A.R.L	0.00
myonic GmbH	0.00
Robert Bosch GmbH	0.00
Robert Bosch GmbH Power Tools and Hagglunds Drives	0.00
Italy:	
Audi AG	0.00
Bosch Rexroth S.p.A	0.00
Caterpillar Overseas S.A.R.L	0.00
Caterpillar of Australia Pty. Ltd	0.00
Caterpillar Group Services S.A	0.00
Caterpillar Mexico, S.A. de C.V	0.00
Caterpillar Americas C.V	0.00
Hagglunds Drives S.r.l	0.00
Perkins Engines Company Limited	0.00
Schaeffler Italia S.r.l. and WPB Water Pump Bearing GmbH & Co. KG, Schaeffler italia SpA and The Schaeffler Group	0.00
SKF Industries S.p.A., Somcat S.p.A., and SKF Riv–SKF Officine di Villar Perosa S.p.A	0.00
SNECMA	0.00
Volkswagen AG	0.00
Volkswagen Zubehor GmbH	0.00

Assessment Rates

In accordance with the *Final Modification,* we will instruct U.S. Customs and Border Protection (CBP) to liquidate the reviews' entries without regard to antidumping duties.[3]

The Department clarified its ''automatic assessment'' regulation on May 6, 2003. This clarification will apply to entries of subject merchandise during the period of review produced by companies selected for individual examination in the reviews for which the reviewed companies did not know their merchandise was destined for the United States. In such instances, we will instruct CBP to liquidate unreviewed entries at the country-specific all-others rate if there is no rate for the

[3] *See Antidumping Proceedings: Calculation of the Weighted-Average Dumping Margin and Assessment Rate in Certain Antidumping Duty Proceedings; Final Modification,* 77 FR 8101 (February 14, 2012) (*Final Modification*).

intermediate company(ies) involved in the transaction. For a full discussion of this clarification, *see Antidumping and Countervailing Duty Proceedings: Assessment of Antidumping Duties,* 68 FR 23954 (May 6, 2003).

For the companies which were not selected for individual examination, we will instruct CBP to apply the rates listed above to all entries of subject merchandise produced and/or exported by such firms.

We intend to issue liquidation instructions to CBP 15 days after publication of the final results of these reviews.

Cash Deposit Requirements

Because we revoked the order effective September 15, 2011, no cash deposit for estimated antidumping duties on future entries of subject merchandise is required.[4]

Notifications

This notice serves as a final reminder to importers of their responsibility under 19 CFR 351.402(f)(2) to file a certificate regarding the reimbursement of antidumping duties prior to liquidation of the relevant entries during this review period. Failure to comply with this requirement could result in the Department's presumption that reimbursement of antidumping duties occurred and the subsequent assessment of doubled antidumping duties.

This notice also serves as a reminder to parties subject to administrative protective order (APO) of their responsibility concerning the disposition of proprietary information disclosed under APO in accordance with 19 CFR 351.305(a)(3). Timely notification of the destruction of APO materials or conversion to judicial protective order is hereby requested. Failure to comply with the regulations and the terms of an APO is a sanctionable violation.

These final results of administrative reviews are issued and published in accordance with sections 751(a)(1), 751(b)(1), and 777(i)(1) of the Act.

Dated: December 4, 2012

Paul Piquado,

Assistant Secretary for Import Administration.

Appendix

1. Targeted Dumping Methodology
2. ISEs, Packing, and Inland Freight Costs
3. G&A Expenses
4. U.S. Warehousing Expenses
5. Home Market Interest Expense Calculation
6. Capping Interest Revenue at the Amount of Credit Expenses
7. Other Issues

[FR Doc. 2012–29770 Filed 12–7–12; 8:45 am]

BILLING CODE 3510–DS–P

[4] *See Ball Bearings and Parts Thereof from France, Germany and Italy: Final Results of Sunset Reviews and Revocation of Antidumping Duty Orders,* 76 FR 57019 (September 15, 2011).

DEPARTMENT OF COMMERCE

International Trade Administration

[A–570–900]

Diamond Sawblades and Parts Thereof From the People's Republic of China: Preliminary Results of Antidumping Duty Administrative Review: 2010–2011

AGENCY: Import Administration, International Trade Administration, Department of Commerce.

SUMMARY: The Department of Commerce (''the Department'') is conducting an administrative review of the antidumping duty order on diamond sawblades and parts thereof (''diamond sawblades'') from the People's Republic of China (''PRC''). The period of review (''POR'') is November 1, 2010 through October 31, 2011. The Department has preliminarily determined that certain companies covered by this review made sales of subject merchandise at less than normal value.

DATES: *Effective Date:* December 10, 2012.

FOR FURTHER INFORMATION CONTACT: Yang Jin Chun or Michael A. Romani, AD/CVD Operations, Office 1, Import Administration, International Trade Administration, U.S. Department of Commerce, 14th Street and Constitution Avenue NW., Washington, DC 20230; telephone: (202) 482–5760 and (202) 482–0198, respectively.

Scope of the Order

The products covered by the order are all finished circular sawblades, whether slotted or not, with a working part that is comprised of a diamond segment or segments, and parts thereof, regardless of specification or size, except as specifically excluded below. Within the scope of the order are semifinished diamond sawblades, including diamond sawblade cores and diamond sawblade segments. Diamond sawblade cores are circular steel plates, whether or not attached to non-steel plates, with slots. Diamond sawblade cores are manufactured principally, but not exclusively, from alloy steel. A diamond sawblade segment consists of a mixture of diamonds (whether natural or synthetic, and regardless of the quantity of diamonds) and metal powders (including, but not limited to, iron, cobalt, nickel, tungsten carbide) that are formed together into a solid shape (from generally, but not limited to, a heating and pressing process).

Sawblades with diamonds directly attached to the core with a resin or electroplated bond, which thereby do not contain a diamond segment, are not included within the scope of the order. Diamond sawblades and/or sawblade cores with a thickness of less than 0.025 inches, or with a thickness greater than 1.1 inches, are excluded from the scope of the order. Circular steel plates that have a cutting edge of non-diamond material, such as external teeth that protrude from the outer diameter of the plate, whether or not finished, are excluded from the scope of the order. Diamond sawblade cores with a Rockwell C hardness of less than 25 are excluded from the scope of the order. Diamond sawblades and/or diamond segment(s) with diamonds that predominantly have a mesh size number greater than 240 (such as 250 or 260) are excluded from the scope of the order. Merchandise subject to the order is typically imported under heading 8202.39.00.00 of the Harmonized Tariff Schedule of the United States (''HTSUS''). When packaged together as a set for retail sale with an item that is separately classified under headings 8202 to 8205 of the HTSUS, diamond sawblades or parts thereof may be imported under heading 8206.00.00.00 of the HTSUS. On October 11, 2011, the Department included the 6804.21.00.00 HTSUS classification number to the customs case reference file, pursuant to a request by U.S. Customs and Border Protection (''CBP'').[1] The tariff classification is provided for convenience and customs purposes; however, the written description of the scope of the order is dispositive.

Fraud Allegation

The petitioner, Diamond Sawblades Manufacturers' Coalition, alleges that Chinese and Korean producers of diamond sawblades sold subject merchandise in the United States bearing a false country of origin designation and requests that the Department take information related to this allegation into consideration in both the first and second administrative reviews. We continue to examine this allegation. The Department recently completed verifications in the first administrative review at which the facts

[1] *See Diamond Sawblades and Parts Thereof From the Republic of Korea: Preliminary Results of Antidumping Duty Administrative Review,* 76 FR 76128 (December 6, 2011).

surrounding the fraud allegation were examined thoroughly. We intend to release the verification reports and issue a post-preliminary analysis addressing the fraud allegation.

Methodology

The Department has conducted this review in accordance with section 751(a)(1)(B) of the Tariff Act of 1930, as amended (''the Act''). Export price and constructed export price have been calculated in accordance with section 772 of the Act. Because the PRC is a nonmarket economy (''NME'') within the meaning of section 771(18) of the Act, normal value has been calculated in accordance with section 773(c) of the Act. Specifically, the respondents' factors of production have been valued in Thailand, which is economically comparable to the PRC and is a significant producer of comparable merchandise. The financial ratios were derived from the financial statements of a producer of comparable merchandise in the Philippines, which is economically comparable to the PRC.

For a full description of the methodology underlying our conclusions, *see* ''Decision Memorandum for Preliminary Results of 2010–2011 Antidumping Duty Administrative Review: Diamond Sawblades and Parts Thereof from the People's Republic of China'' from Gary Taverman, Senior Advisor for Antidumping and Countervailing Duty Operations, to Ronald K. Lorentzen, Acting Assistant Secretary for Import Administration, dated December 3, 2012 (''Preliminary Decision Memorandum, hereby adopted by this notice. The Preliminary Decision Memorandum is a public document and is on file electronically via Import Administration's Antidumping and Countervailing Duty Centralized Electronic Service System (''IA ACCESS''). IA ACCESS is available to registered users at *https://iaaccess.trade.gov* and in the Central Records Unit, room 7046 of the main Department of Commerce building. In addition, a complete version of the Preliminary Decision Memorandum can be accessed directly on the internet at *http://www.trade.gov/ia/.* The signed Preliminary Decision Memorandum and the electronic versions of the Preliminary Decision Memorandum are identical in content.

Affiliation and Treatment of Affiliated Parties as a Single Entity

For the preliminary results of review, we find that Advanced Technology & Materials Co., Ltd. (''ATM''), Beijing Gang Yan Diamond Products Company (''BGY''), and HXF Saw Co., Ltd.[2] (''HXF'') are affiliated.[3] Additionally, we preliminarily find that BGY and Cliff (''Tianjin'') International Ltd. (''Cliff'') are affiliated and that ATM and AT&M International Trading Co., Ltd. (''ATMI'') are affiliated. Therefore, in these preliminary results the ''ATM Single Entity'' consists of ATM, ATMI, BGY, Cliff, and HXF.[4]

Withdrawal of Request for Review

We received a letter of withdrawal from Danyang Hantronic Import & Export Co., Ltd. (''Danyang Hantronic''), with respect to the review.[5] Because Danyang Hantronic has not previously received a separate rate, we are not rescinding this review. While the request for review for this company was timely withdrawn, the company remains part of the PRC-wide entity.

Preliminary Determination of No Shipments

Qingdao Shinhan Diamond Industrial Co., Ltd. (''Qingdao Shinhan''), which has a separate rate, reported that it did not have any exports of subject merchandise during the POR.[6] This is consistent with the CBP data for the POR, which showed no evidence of imports from this company.[7] Additionally, we requested that CBP report any contrary information. To date, CBP has not responded to our inquiry and we have not received any evidence that this entity had any shipments to the United States of subject merchandise during the POR.[8] Consistent with the Department's recently announced refinement to its assessment practice in NME cases regarding no shipment claims, we are completing the review with respect to Qingdao Shinhan, and will issue appropriate instructions to CBP based on the final results of the review.[9]

We also received a no shipment claim from China Iron & Steel Research Institute Group (''CISRI'')[10] which does not have a separate rate. Because CISRI does not have a separate rate and remains part of the PRC entity, we are not addressing its no shipment claim.

Preliminary Results of Review

The Department preliminarily determines that the following weighted-average dumping margins exist:

Exporter	Margin (percent)
Advanced Technology & Materials Co., Ltd	0.00
AT&M International Trading Co., Ltd	0.00
Beijing Gang Yan Diamond Products Co.[11]	0.00
Bosun Tools Co., Ltd.[12]	35.09
Chengdu Huifeng Diamond Tools Co., Ltd	35.09
Cliff International Ltd	0.00
Danyang Huachang Diamond Tools Manufacturing Co., Ltd	35.09
Danyang NYCL Tools Manufacturing Co., Ltd	35.09
Danyang Weiwang Tools Manufacturing Co., Ltd	35.09
Guilin Tebon Superhard Material Co., Ltd	35.09
Hangzhou Deer King Industrial & Trading Co., Ltd	35.09

[2] *See* letter to the Secretary of Commerce dated February 27, 2012, entitled ''Diamond Sawblades from the People's Republic of China: No Shipment Certification''.

[3] *See Final Determination of Sales at Less Than Fair Value and Final Partial Affirmative Determination of Critical Circumstances: Diamond Sawblades and Parts Thereof from the People's Republic of China*, 71 FR 29303, 29304, 29306–07 (May 22, 2006).

[4] For a full discussion of these companies' affiliation status, *see* the memorandum entitled ''Diamond Sawblades and Parts Thereof from the People's Republic of China: ATM Single Entity,'' dated December 3, 2012.

[5] *See* the letter from Danyang Hantronic dated March 28, 2012.

[6] *See* the no shipment letter filed by Qingdao Shinhan on February 28, 2012.

[7] *See* the memorandum entitled ''Diamond Sawblades and Parts Thereof from the People's Republic of China—placing CBP Data on the record of this review'' dated January 6, 2012.

[8] CBP only responds to the Department's inquiry when there are records of shipments from the company in question. *See, e.g., Certain Hot-Rolled Flat-Rolled Carbon Quality Steel Flat Products From Brazil: Notice of Rescission of Antidumping Duty Administrative Review,* 75 FR 65453, 65454 (October 25, 2010).

[9] *See Non-Market Economy Antidumping Proceedings: Assessment of Antidumping Duties,* 76 FR 65694 (October 24, 2011) and the ''Assessment Rates'' section below.

[10] *See* the no shipment letter filed by CISRI on February 27, 2012.

Exporter	Margin (percent)
Hebei Husqvarna-Jikai Diamond Tools Co., Ltd[13]	35.09
Huzhou Gu's Import & Export Co., Ltd	35.09
HXF Saw Co., Ltd.[14]	0.00
Jiangsu Fengtai Diamond Tool Manufacture Co., Ltd	35.09
Jiangsu Inter-China Group Corporation[15]	35.09
Jiangsu Youhe Tool Manufacturer Co., Ltd.[16]	35.09
Quanzhou Zhongzhi Diamond Tool Co. Ltd	35.09
Rizhao Hein Saw Co., Ltd	35.09
Saint-Gobain Abrasives (Shanghai) Co., Ltd.[17]	35.09
Shanghai Robtol Tool Manufacturing Co., Ltd	35.09
Weihai Xiangguang Mechanical Industrial Co., Ltd	35.09
Wuhan Wanbang Laser Diamond Tools Co	35.09
Xiamen ZL Diamond Technology Co., Ltd.[18]	35.09
Zhejiang Wanli Tools Group Co., Ltd	35.09
PRC-Wide Entity[19]	164.09

Disclosure and Public Comment

The Department will disclose calculations performed for these preliminary results to the parties within five days of the date of publication of this notice in accordance with 19 CFR 351.224(b). Interested parties may submit written comments no later than 30 days after the date of publication of these preliminary results of review.[20] Rebuttals to written comments may be filed no later than five days after the written comments are filed.[21]

Any interested party may request a hearing within 30 days of publication of this notice.[22] Hearing requests should contain the following information: (1) The party's name, address, and telephone; (2) the number of participants; and (3) a list of issues to be discussed. Oral presentations will be limited to issues raised in the briefs. If a request for a hearing is made, parties will be notified of the time and date for the hearing to be held at the U.S. Department of Commerce, 1401 Constitution Avenue NW., Washington, DC 20230.[23]

The Department will issue the final results of this administrative review, which will include the results of its analysis of issues raised in any such comments, within 120 days of publication of these preliminary results, pursuant to section 751(a)(3)(A) of the Act.

[11] Beijing Gang Yan Diamond Products Co. reported that Gang Yan Diamond Products Inc., a company for which we initiated this review in *Initiation of Antidumping and Countervailing Duty Administrative Reviews and Request for Revocation in Part,* 76 FR 82268, 82271 (December 30, 2011) (*Initiation Notice*), is its U.S. affiliate. *See* the ATM Single Entity's section A response dated March 19, 2012, at page A–1.

[12] Bosun Tools Co., Ltd. was previously known as Bosun Tools Group Co., Ltd., a company for which we initiated this review in *Initiation Notice,* 76 FR at 82270. *See Diamond Sawblades and Parts Thereof From the People's Republic of China: Preliminary Results of Antidumping Duty Administrative Review and Intent To Rescind Review in Part,* 76 FR 76135, 76137 (December 6, 2011). Also, Bosun Tools Co., Ltd., reported that Bosun Tools Inc., a company for which we initiated this review in *Initiation Notice,* 76 FR at 82271, is its U.S. affiliate. *See* Bosun Tools Co., Ltd.'s separate rate application dated February 28, 2012, at 4.

[13] Hebei Husqvarna-Jikai Diamond Tools Co., Ltd., reported that Husqvarna Construction Products North America, Inc., a company for which we initiated this review in *Initiation Notice,* 76 FR at 82271, is its U.S. affiliate. *See* Hebei Husqvarna-Jikai Diamond Tools Co., Ltd.'s separate rate application dated February 24, 2012, at 18 and Appendix A.

[14] Yichang HXF Circular Saw Industrial Co., Ltd., changed its name to HXF Saw Co., Ltd. *See* the ATM Single Entity's October 5, 2012, response at Exhibit SA–9.

[15] Jiangsu Inter-China Group Corporation was previously known as Zhenjiang Inter-China Import & Export Co., Ltd., a company for which we initiated this review in *Initiation Notice,* 76 FR at 82271. *See* Jiangsu Inter-China Group Corporation's August 6, 2012, supplemental separate rate application at Exhibit S–1.

[16] Jiangsu Youhe Tool Manufacturer Co., Ltd., was previously known as Danyang Youhe Tool Manufacturer Co., Ltd., a company for which we initiated this review in *Initiation Notice,* 76 FR at 82271. *See* Jiangsu Youhe Tool Manufacturer Co., Ltd.'s February 28, 2012, separate rate application at 4 and Exhibit 1.

[17] Saint-Gobain Abrasives (Shanghai) Co., Ltd. reported that Saint-Gobain Abrasives Inc., a company for which we initiated this review in *Initiation Notice,* 76 FR at 82271, is its U.S. affiliate. *See* Saint-Gobain Abrasives (Shanghai) Co., Ltd.'s February 28, 2012, separate rate application at 9.

[18] Xiamen ZL Diamond Technology Co., Ltd., stated in its separate rate application that its name before the POR was Xiamen ZL Diamond Tools Co., Ltd., for which we initiated this review in *Initiation Notice,* 76 FR at 82271. *See* Xiamen ZL Diamond Technology Co., Ltd.'s February 22, 2012, separate rate application at 2.

[19] The deadline to file a separate rate application, separate rate certification, or a notification of no sales, exports or entries is 60 days after the initiation of the administrative review, which in this case was February 28, 2012. Therefore, as of February 29, 2012, the remaining companies under review that did not demonstrate eligibility for a separate rate effectively became part of the PRC-wide entity. Accordingly, the PRC-wide entity includes the following companies: Central Iron and Steel Research Institute Group, CISRI, Danyang Aurui Hardware Products Co., Ltd., Danyang Dida Diamond Tools Manufacturing Co., Ltd., Danyang Hantronic, Danyang Tsunda Diamond Tools Co., Ltd., Danyang Youmei Tools Co., Ltd., Electrolux Construction Products (Xiamen) Co. Ltd., Fujian Quanzhou Wanlong Stone Co., Ltd., Hebei Jikai Industrial Group Co., Ltd., Hua Da Superabrasive Tools Technology Co., Ltd., Huachang Diamond Tools Manufacturing Co., Ltd., Jiangsu Fengyu Tools Co., Ltd., Jiangyin Likn Industry Co., Ltd., Protech Diamond Tools, Pujiang Talent Diamond Tools Co., Ltd., Quanzhou Shuangyang Diamond Tools Co., Ltd., Shanghai Deda Industry & Trading Co., Ltd., Shijiazhuang Global New Century Tools Co., Ltd., Sichuan Huili Tools Co., Task Tools & Abrasives, Wuxi Lianhua Superhard Material Tools Co., Ltd., Zhejiang Tea Import & Export Co., Ltd., Zhejiang Wanda Import and Export Co., Zhejiang Wanda Tools Group Corp., Zhejiang Wanli Superhard Materials Co., Ltd., and Wanli Tools Group.

[20] *See* 19 CFR 351.309(c).

[21] *See* 19 CFR 351.309(d).

[22] *See* 19 CFR 351.310(c).

[23] *See* 19 CFR 351.310(d).

Deadline for Submission of Publicly Available Surrogate Value Information

In accordance with 19 CFR 351.301(c)(3)(ii), the deadline for submission of publicly available information to value factors production under 19 CFR 351.408(c) is 20 days after the date of publication of these preliminary results. In accordance with 19 CFR 351.301(c)(1), if an interested party submits factual information less than ten days before, on, or after (if the Department has extended the deadline), the applicable deadline for submission of such factual information, an interested party may submit factual information to rebut, clarify, or correct the factual information no later than ten days after such factual information is served on the interested party. However, the Department generally will not accept in the rebuttal submission additional or alternative surrogate value information not previously on the record, if the deadline for submission of surrogate value information has passed.[24] Furthermore, the Department generally will not accept business proprietary information in either the surrogate value submissions or the rebuttals thereto, as the regulation regarding the submission of surrogate values allows only for the submission of publicly available information.[25]

Assessment Rates

Upon issuing the final results of review, the Department will determine, and CBP shall assess, antidumping duties on all appropriate entries covered by this review.[26] If a respondent's weighted-average dumping margin is above *de minimis* (*i.e.*, 0.50 percent) in the final results of this review, we will calculate an importer-specific assessment rate on the basis of the ratio of the total amount of dumping calculated for the importer's examined sales and the total entered value of those sales in accordance with 19 CFR 351.212(b)(1). Specifically, the Department will apply the assessment rate calculation method adopted in *Final Modification for Reviews, i.e.*, on the basis of monthly average-to-average comparisons using only the transactions associated with that importer with offsets being provided for non-dumped comparisons.[27] Where an importer- (or customer-) specific *ad valorem* rate is zero or *de minimis,* we will instruct CBP to liquidate appropriate entries without regard to antidumping duties.[28]

The Department recently announced a refinement to its assessment practice in NME cases. Pursuant to this refinement in practice, for entries that were not reported in the U.S. sales databases submitted by companies individually examined during this review, the Department will instruct CBP to liquidate such entries at the PRC-wide rate. In addition, if the Department determines that an exporter under review had no shipments of the subject merchandise, any suspended entries that entered under that exporter's case number (*i.e.,* at that exporter's rate) will be liquidated at the PRC-wide rate.[29] The Department intends to issue appropriate assessment instructions directly to CBP 15 days after publication of the final results of review.

Cash Deposit Requirements

The following cash deposit requirements will be effective upon publication of the final results of this administrative review for shipments of the subject merchandise from the PRC entered, or withdrawn from warehouse, for consumption on or after the publication date, as provided by section 751(a)(2)(C) of the Act: (1) For subject merchandise exported by the ATM Single Entity, Weihai, and non-selected respondents which have separate rates, the cash deposit rate will be that established in the final results of review (except, if the rate is zero or *de minimis,* then zero cash deposit will be required); (2) for previously investigated or reviewed PRC and non-PRC exporters not listed above that received a separate rate in a prior segment of this proceeding, the cash deposit rate will continue to be the existing exporter-specific rate; (3) for all PRC exporters of subject merchandise that have not been found to be entitled to a separate rate, the cash deposit rate will be that for the PRC-wide entity; and (4) for all non-PRC exporters of subject merchandise which have not received their own rate, the cash deposit rate will be the rate applicable to the PRC exporter that supplied that non-PRC exporter. These deposit requirements, when imposed, shall remain in effect until further notice.

Notification to Importers

This notice also serves as a preliminary reminder to importers of their responsibility under 19 CFR 351.402(f)(2) to file a certificate regarding the reimbursement of antidumping duties prior to liquidation of the relevant entries during this review period. Failure to comply with this requirement could result in the Department's presumption that reimbursement of antidumping duties occurred and the subsequent assessment of double antidumping duties.

We are issuing and publishing these results in accordance with sections 751(a)(1) and 777(i)(1) of the Act and 19 CFR 351.213.

Dated: December 3, 2012.

Ronald K. Lorentzen,

Acting Assistant Secretary for Import Administration.

List of Topics Discussed in the Preliminary Decision Memorandum

Fraud Allegation
Non-Market Economy Country Status
Separate Rate
Separate Rate Respondent
(1) *Wholly Foreign-Owned*
(2) *Joint Ventures Between Chinese and Foreign Companies or Wholly Chinese-Owned Companies*
(3) *Separate Rate for Non-Selected Companies*
(4) *PRC-Wide Entity*
Surrogate Country
Affiliation
Fair Value Comparison
U.S. Price
Export Price Sales
Constructed Export Price Sales
Further Manufactured Sales
Revenue Caps
Normal Value
Factor Valuations
Currency Conversion

[FR Doc. 2012–29786 Filed 12–7–12; 8:45 am]

BILLING CODE 3510–DS–P

DEPARTMENT OF COMMERCE

International Trade Administration

[A–580–855]

Diamond Sawblades and Parts Thereof From the Republic of Korea: Preliminary Results of Antidumping Duty Administrative Review; 2010–2011

AGENCY: Import Administration, International Trade Administration, Department of Commerce.

[24] *See, e.g., Glycine from the People's Republic of China: Final Results of Antidumping Duty Administrative Review and Final Rescission, in Part, 72 52 58809* (October 17, 2007), and accompanying Issues and Decision Memorandum at Comment 2.

[25] *See* 19 CFR 351.301(c)(3).

[26] *See* 19 CFR 351.212(b)(1).

[27] *See Antidumping Proceeding: Calculation of the Weighted-Average Dumping Margin and Assessment Rate in Certain Antidumping Duty Proceedings; Final Modification,* 77 FR 8103 (February 14, 2012) (''*Final Modification for Reviews*'').

[28] *See* 19 CFR 351.106(c)(2).

[29] For a full discussion of this practice, *see Non-Market Economy Antidumping Proceedings: Assessment of Antidumping Duties,* 76 FR 65694 (October 24, 2011).

SUMMARY: The Department of Commerce (''Department'') is conducting an administrative review of the antidumping duty order on diamond sawblades and parts thereof (''diamond sawblades'') from the Republic of Korea (''Korea''). The period of review (''POR'') is November 1, 2010, through October 23, 2011, and the review covers three manufacturers/exporters: Ehwa Diamond Industrial Co., Ltd. (''Ehwa''); Hyosung D&P Co., Ltd. (''Hyosung''); and Shinhan Diamond Industrial Co., Ltd. (''Shinhan''). We preliminarily find that sales of subject merchandise have been made at prices below normal value.

DATES: *Effective Date:* December 10, 2012.

FOR FURTHER INFORMATION CONTACT: David Layton or Sergio Balbontin, AD/CVD Operations, Office 1, Import Administration, International Trade Administration, U.S. Department of Commerce, 14th Street and Constitution Avenue NW., Washington, DC 20230; telephone: (202) 482–0371, and (202) 482–6478, respectively.

SUPPLEMENTARY INFORMATION:

Scope of the Order

The merchandise subject to the order is diamond sawblades. The product is typically imported under heading 8202.39.00.00 of the Harmonized Tariff Schedule of the United States (''HTSUS''). When packaged together as a set for retail sale with an item that is separately classified under headings 8202 to 8205 of the HTSUS, diamond sawblades or parts thereof may be imported under heading 8206.00.00.00 of the HTSUS. Subject merchandise may also enter under heading HTSUS 6804.21.00.00 to the scope description pursuant to a request by U.S. Customs and Border Protection (''CBP''). Although the HTSUS headings are provided for convenience and customs purposes, the written product description available in *Diamond Sawblades and Parts Thereof From the Republic of Korea: Preliminary Results of Antidumping Duty Administrative Review,* 76 FR 76128 (December 6, 2011), remains dispositive.

Fraud Allegation

The petitioner, Diamond Sawblades Manufacturers' Coalition, alleges that Chinese and Korean producers of diamond sawblades sold subject merchandise in the United States bearing a false country of origin designation and requests that the Department take information related to this allegation into consideration in both the first and second administrative reviews. We continue to examine this allegation. The Department recently completed verifications in the first administrative review at which the facts surrounding the fraud allegation were examined thoroughly. We intend to release the verification reports and issue a post-preliminary analysis addressing the fraud allegation.

Adverse Facts Available

Because Hyosung did not respond to our request for information, we determine that it is appropriate to apply ''facts otherwise available'' pursuant to section 776(a)(2)(B) of the Tariff Act of 1930, as amended (''Act''). We further determine that an adverse inference is warranted in accordance with section 776(b) of the Act because, in failing to respond, Hyosung has not acted to the best of its ability to comply with our request for information. For further details of our decision to apply adverse facts available, *see* the ''Preliminary Decision Memorandum for Administrative Review of the Antidumping Duty Order on Diamond Sawblades and Parts Thereof from the Republic of Korea'' (''Preliminary Decision Memorandum''), dated concurrently with this notice and hereby adopted by this notice. The Preliminary Decision Memorandum is a public document and is on file electronically via Import Administration's Antidumping and Countervailing Duty Centralized Electronic Service System (''IA ACCESS''). IA ACCESS is available to registered users at *http://iaaccess.trade.gov* and in the Central Records Unit, room 7046 of the main Department of Commerce building. In addition, a complete version of the Preliminary Decision Memorandum can be accessed directly on the internet at *http://www.trade.gov/ia/*. The signed Preliminary Decision Memorandum and the electronic versions of the Preliminary Decision Memorandum are identical in content.

Methodology

The Department has conducted this review in accordance with section 751(a)(2) of the Act. Constructed export price is calculated in accordance with section 772 of the Act. Normal value has been calculated in accordance with section 773 of the Act. For a full description of the methodology underlying our conclusions, *see* the Preliminary Decision Memorandum.

Preliminary Results of Review

As a result of this administrative review, we preliminarily determine that the following weighted-average percentage dumping margins exist for the period November 1, 2010, through October 23, 2011:

Exporter/manufacturer	Margin (percent)
Ehwa Diamond Industrial Co., Ltd	12.25
Hyosung Diamond Industrial Co., Ltd, Western Diamond Tools Inc., and Hyosung D&P Co., Ltd	121.19
Shinhan Diamond Industrial Co., Ltd. and SH Trading, Inc	0.00

Disclosure and Public Comment

The Department will disclose to parties to this proceeding the calculations performed in reaching the preliminary results within five days of the date of publication of these preliminary results.[1] Interested parties may submit written comments (case briefs) within 30 days of publication of the preliminary results and rebuttal comments (rebuttal briefs) within five days after the time limit for filing case briefs.[2] Pursuant to 19 CFR 351.309(d)(2), rebuttal briefs must be limited to the issues raised in the case briefs. Parties who submit arguments are requested to submit with the argument: (1) A statement of the issue; (2) a brief summary of the argument; and (3) a table of authorities.

Interested parties who wish to request a hearing, or to participate if one is requested, must submit a written request to the Assistant Secretary for Import Administration, U.S. Department of Commerce, filed electronically using IA ACCESS. An electronically filed document must be received successfully in its entirety by the Department's electronic records system, IA ACCESS, by 5 p.m. Eastern Standard Time within 30 days after the date of publication of this notice.[3] Requests should contain the party's name, address, and telephone number, the number of participants, and a list of issues to be discussed. If a request for a hearing is made, we will inform parties of the scheduled date for the hearing which will be held at the U.S. Department of Commerce, 14th Street and Constitution Avenue NW., Washington DC 20230, at a time and location to be determined.[4] Parties should confirm by telephone the date, time, and location of the hearing.

Unless the deadline is extended pursuant to section 751(a)(2)(B)(iv) of the Act, the Department will issue the final results of this administrative

[1] *See* 19 CFR 351.224(b).

[2] *See* 19 CFR 351.309(c)(1)(ii).

[3] *See* 19 CFR 351.310(c).

[4] *See* 19 CFR 351.310.

review, including the results of its analysis of issues raised by parties in their comments, within 120 days after the issuance of these preliminary results.

Assessment Rates

The Department shall determine, and CBP will assess, antidumping duties on all appropriate entries in accordance with 19 CFR 351.212(b)(1). Pursuant to an order issued by the U.S. Court of International Trade on October 24, 2011, liquidation of the entries covered by this administrative review is enjoined. Accordingly, the Department will not instruct CBP to assess antidumping duties pending resolution of the associated litigation.

For any individually examined respondents whose weighted-average dumping margin is above *de minimis,* we will calculate importer-specific *ad valorem* duty assessment rates based on the ratio of the total amount of dumping calculated for the importer's examined sales to the total entered value of those same sales in accordance with 19 CFR 351.212(b)(1).[5]

We will instruct CBP to assess antidumping duties on all appropriate entries covered by this review when the importer-specific assessment rate calculated in the final results of this review is above *de minimis (i.e.,* 0.50 percent). Where either the respondent's weighted-average dumping margin is zero or *de minimis,* or an importer-specific assessment rate is zero or *de minimis,* we will instruct CBP to liquidate the appropriate entries without regard to antidumping duties. The final results of this review shall be the basis for the assessment of antidumping duties on entries of merchandise covered by the final results of this review where applicable.

The Department clarified its ''automatic assessment'' regulation on May 6, 2003. *See Antidumping and Countervailing Duty Proceedings: Assessment of Antidumping Duties,* 68 FR 23954 (May 6, 2003) (*''Assessment Policy Notice''*). This clarification will apply to entries of subject merchandise during the POR produced by Ehwa and Shinhan for which these companies did not know that their merchandise was destined for the United States. In such instances, we will instruct CBP to liquidate unreviewed entries at the all-others rate if there is no rate for the intermediate involved in the transaction. For a full discussion of this clarification, *see Assessment Policy Notice.*

Cash Deposit Requirements

Effective October 24, 2011, the Department revoked the antidumping duty order on diamond sawblades from Korea, pursuant to a proceeding under section 129 of the Uruguay Round Agreements Act to implement the findings of the World Trade Organization dispute settlement panel in United States—*Use of Zeroing in Anti-Dumping Measures Involving Products from Korea* (WTIDS402/R) (January 18, 2011). *See Notice of Implementation of Determination Under Section 129 of the Uruguay Round Agreements Act and Revocation of the Antidumping Duty Order on Diamond Sawblades and Parts Thereof From the Republic of Korea,* 76 FR 66892 (October 28, 2011), and accompanying Issues and Decision Memorandum. Consequently, no cash deposits are required on imports of subject merchandise.

Notification to Importers

This notice also serves as a preliminary reminder to importers of their responsibility under 19 CFR 351.402(f)(2) to file a certificate regarding the reimbursement of antidumping duties prior to liquidation of the relevant entries during this review period. Failure to comply with this requirement could result in the Secretary's presumption that reimbursement of antidumping duties occurred and the subsequent assessment of double antidumping duties.

This review and notice are in accordance with sections 751(a)(1), 751(a)(3), and 777(i) of the Act.

Dated: December 3, 2012.

Ronald K. Lorentzen,

Acting Assistant Secretary for Import Administration.

Appendix

List of Topics Discussed in Preliminary Decision Memorandum

1. Fraud Allegation
2. Discussion of Methodology
   a. Application of Facts Available
   b. Adverse Facts Available
   c. Corroboration
   d. Comparison to Normal Value
   e. Product Comparisons
   f. Date of Sale
   g. Constructed Export Price
   h. Normal Value
   i. Currency Conversion

[FR Doc. 2012–29757 Filed 12–7–12; 8:45 am]

BILLING CODE 3510–DS–P

[5] In these preliminary results, the Department applied the assessment rate calculation method adopted in *Antidumping Proceedings: Calculation of the Weighted-Average Dumping Margin and Assessment Rate in Certain Antidumping Proceedings: Final Modification,* 77 FR 8101 (February 14, 2012).

DEPARTMENT OF COMMERCE

International Trade Administration

[A–201–838]

Seamless Refined Copper Pipe and Tube From Mexico: Preliminary Results of Antidumping Duty Administrative Review; 2010–2011

AGENCY: Import Administration, International Trade Administration, Department of Commerce.

SUMMARY: The Department of Commerce (the Department) is conducting an administrative review of the antidumping duty order on seamless refined copper pipe and tube from Mexico. The review covers two producers/exporters of the subject merchandise, GD Affiliates S. de R.L. de C.V. and its affiliate Hong Kong GD Trading Co., Ltd. (collectively, Golden Dragon) and Nacional de Cobre, S.A. de C.V. (Nacobre). The period of review (POR) is May 1, 2011, through October 31, 2011, for Golden Dragon and November 22, 2010, through October 31, 2011, for Nacobre. We have preliminarily found that sales of the subject merchandise have not been made at prices below normal value.

DATES: *Effective Date:* December 10, 2012.

FOR FURTHER INFORMATION CONTACT: Elizabeth Eastwood or Dennis McClure, AD/CVD Operations, Office 2, Import Administration, International Trade Administration, U.S. Department of Commerce, 14th Street and Constitution Avenue NW., Washington, DC 20230; telephone: (202) 482–3874 or (202) 482–5973, respectively.

SUPPLEMENTARY INFORMATION:

Scope of the Order

The merchandise subject to the order is seamless refined copper pipe and tube. The product is currently classified under the Harmonized Tariff Schedule of the United States (HTSUS) subheadings 7407.10.1500, 7419.99.5050, 8415.90.8065, and 8415.90.8085. Although the HTSUS numbers are provided for convenience and customs purposes, the written product description, available in *Seamless Refined Copper Pipe and Tube From Mexico and the People's Republic of China: Antidumping Duty Orders and Amended Final Determination of Sales at Less Than Fair Value From Mexico,* 75 FR 71070 (Nov. 22, 2010) (*Amended Final and Order*), remains dispositive.

Methodology

The Department has conducted this review in accordance with section

751(a)(2) of the Tariff Act of 1930, as amended (the Act). Constructed export price is calculated in accordance with section 772 of the Act. Normal value is calculated in accordance with section 773 of the Act.

For a full description of the methodology underlying our conclusions, see the memorandum from Gary Taverman, Senior Advisor for Antidumping and Countervailing Duty Operations, to Ronald K. Lorentzen, Acting Assistant Secretary for Import Administration, entitled, ''Decision Memorandum for Preliminary Results of Antidumping Duty Administrative Review: Seamless Refined Copper Pipe and Tube from Mexico'' (dated concurrently with this notice) (Preliminary Decision Memorandum), which is hereby adopted by this notice. The Preliminary Decision Memorandum is a public document and is on file electronically via Import Administration's Antidumping and Countervailing Duty Centralized Electronic Service System (IA ACCESS). Access to IA ACCESS is available to registered users at *http://iaaccess.trade.gov* and it is available to all parties in the Central Records Unit, 7046 of the main Department of Commerce building. In addition, a complete version of the Preliminary Decision Memorandum can be accessed directly on the Internet at *http://www.trade.gov/ia/*. The signed Preliminary Decision Memorandum and the electronic versions of the Preliminary Decision Memorandum are identical in content.

Preliminary Results of Review

As a result of this review, we preliminarily determine that no weighted-average dumping margin exists for Golden Dragon for the period May 1, 2010, through October 31, 2011, or for Nacobre for the period November 22, 2010, through October 31, 2011.

Disclosure and Public Comment

The Department intends to disclose to interested parties the calculations performed in connection with these preliminary results within five days of the date of publication of this notice.[1] Pursuant to 19 CFR 351.309(c), interested parties may submit cases briefs not later than 30 days after the date of publication of this notice. Rebuttal briefs, limited to issues raised in the case briefs, may be filed not later than five days after the date for filing case briefs.[2] Parties who submit case briefs or rebuttal briefs in this proceeding are encouraged to submit with each argument: (1) A statement of the issue; (2) a brief summary of the argument; and (3) a table of authorities.[3] Case and rebuttal briefs should be filed using IA ACCESS.[4]

Pursuant to 19 CFR 351.310(c), interested parties who wish to request a hearing, or to participate if one is requested, must submit a written request to the Assistant Secretary for Import Administration, filed electronically via IA ACCESS. An electronically-filed document must be received successfully in its entirety by the Department's electronic records system, IA ACCESS, by 5 p.m. Eastern Standard Time within 30 days after the date of publication of this notice.[5] Requests should contain: (1) The party's name, address, and telephone number; (2) the number of participants; and (3) a list of issues to be discussed. Issues raised in the hearing will be limited to those raised in the respective case briefs. The Department will issue the final results of this administrative review, including the results of its analysis of the issues raised in any written briefs, not later than 120 days after the date of publication of this notice, pursuant to section 751(a)(3)(A) of the Act.

Assessment Rates

Upon issuance of the final results, the Department shall determine, and U.S. Customs and Border Protection (CBP) shall assess, antidumping duties on all appropriate entries covered by this review. Golden Dragon and Nacobre reported the names of the importers of record and the entered value for all of their sales to the United States during the POR. If Golden Dragon's and Nacobre's weighted-average dumping margins are above *de minimis* (*i.e.,* 0.50 percent) in the final results of this review, we will calculate importer-specific assessment rates on the basis of the ratio of the total amount of dumping calculated for the importer's examined sales and the total entered value of those sales in accordance with 19 CFR 351.212(b)(1). We will instruct CBP to assess antidumping duties on all appropriate entries covered by this review when the importer-specific assessment rate calculated in the final results of this review is above *de minimis.* Where either the respondent's weighted-average dumping margin is zero or *de minimis,* or an importer-specific assessment rate is zero or *de minimis,* we will instruct CBP to liquidate the appropriate entries without regard to antidumping duties.

The Department clarified its ''automatic assessment'' regulation on May 6, 2003. This clarification will apply to entries of subject merchandise during the POR produced by Golden Dragon and Nacobre for which they did not know its merchandise was destined for the United States. In such instances, we will instruct CBP to liquidate unreviewed entries at the all-others rate if there is no rate for the intermediate company(ies) involved in the transaction. For a full discussion of this clarification, see *Antidumping and Countervailing Duty Proceedings: Assessment of Antidumping Duties,* 68 FR 23954 (May 6, 2003).

We intend to issue instructions to CBP 15 days after publication of the final results of this review.

Cash Deposit Requirements

The following deposit requirements will be effective upon publication of the notice of final results of administrative review for all shipments of seamless refined copper pipe and tube from Mexico entered, or withdrawn from warehouse, for consumption on or after the date of publication as provided by section 751(a)(2) of the Act: (1) The cash deposit rates for Golden Dragon and Nacobre will be the rates established in the final results of this administrative review; (2) for merchandise exported by manufacturers or exporters not covered in this review but covered in a prior segment of the proceeding, the cash deposit rate will continue to be the company-specific rate published for the most recently completed segment; (3) if the exporter is not a firm covered in this review, a prior review, or the original investigation but the manufacturer is, the cash deposit rate will be the rate established for the most recently completed segment for the manufacturer of the merchandise; (4) the cash deposit rate for all other manufacturers or exporters will continue to be 26.03 percent, the all-others rate established in the *Amended Final and Order.* These cash deposit requirements, when imposed, shall remain in effect until further notice.

Notification to Importers

This notice also serves as a preliminary reminder to importers of their responsibility under 19 CFR 351.402(f)(2) to file a certificate regarding the reimbursement of antidumping duties prior to liquidation of the relevant entries during this review period. Failure to comply with this requirement could result in the Secretary's presumption that

[1] *See* 19 CFR 351.224(b).

[2] *See* 19 CFR 351.309(d).

[3] *See* 19 CFR 351.309(c)(2) and (d)(2).

[4] *See* 19 CFR 351.303.

[5] *See* 19 CFR 351.310(c).

reimbursement of antidumping duties occurred and the subsequent assessment of double antidumping duties.

We are issuing and publishing these results in accordance with sections 751(a)(1) and 777(i)(1) of the Act.

Dated: December 3, 2012.

Ronald K. Lorentzen,

Acting Assistant Secretary for Import Administration.

Appendix

List of Topics Discussed in the Preliminary Decision Memorandum

1. Fair-Value Comparisons
2. Targeted Dumping
3. Product Comparisons
4. Date of Sale
5. Constructed Export Price
6. Normal Value
7. Currency Conversion

[FR Doc. 2012–29783 Filed 12–7–12; 8:45 am]

BILLING CODE 3510–DS–P

DEPARTMENT OF COMMERCE

International Trade Administration

[A–552–801]

Certain Frozen Fish Fillets From the Socialist Republic of Vietnam: Partial Rescission of Antidumping Duty Administrative Review

AGENCY: Import Administration, International Trade Administration, Department of Commerce.

SUMMARY: The Department of Commerce (''the Department'') is conducting an administrative review of the antidumping duty order on certain frozen fish fillets (''fish fillets'') from the Socialist Republic of Vietnam (''Vietnam'').[1] The Department is rescinding the review with respect to An Giang Fisheries Import & Export Joint Stock Company (''Agifish''). The period of review (''POR'') is August 1, 2010, through July 31, 2011.

DATES: *Effective Date:* December 10, 2012.

FOR FURTHER INFORMATION CONTACT: Paul Walker, AD/CVD Operations, Office 9, Import Administration, International Trade Administration, U.S. Department of Commerce, 14th Street and Constitution Avenue NW., Washington, DC 20230; telephone 202.482.0413.

SUPPLEMENTARY INFORMATION:

Case History

On October 3, 2011, the Department initiated the eighth administrative review of fish fillets from Vietnam with respect to 32 companies.[2] On January 2 and 3, 2012, Agifish, along with the Catfish Farmers of America and individual U.S. catfish processors (collectively, ''Petitioners''), withdrew their requests for an administrative review of Agifish.[3] On September 12, 2012, the Department published the *Preliminary Results*.[4]

Partial Rescission of Administrative Review

Pursuant to 19 CFR 351.213(d)(1), the Secretary will rescind an administrative review, in whole or in part, if a party who requested the review withdraws the request within 90 days of the date of publication of notice of initiation of the requested review. The withdrawal requests filed by the Petitioners and Agifish were submitted within the 90 day period and, thus, are timely. Because the withdrawal requests were timely submitted and because no other party continues to have an outstanding request for review of Agifish, in accordance with section 351.213(d)(1) of the Department's regulations, we are partially rescinding this review with respect to Agifish.

Assessment Rates

The Department will instruct U.S. Customs and Border Protection (''CBP'') to assess antidumping duties on all appropriate entries. Agifish has a separate rate from a prior segment of this proceeding; therefore, antidumping duties shall be assessed at a rate equal to the cash deposit of estimated antidumping duties required at the time of entry, or withdrawal from warehouse, for consumption during the POR in accordance with 19 CFR 351.212(c)(2). The Department intends to issue appropriate assessment instructions directly to CBP 15 days after publication of this notice.

Notification to Interested Parties

This notice serves as a preliminary reminder to importers of their responsibility under 19 CFR 351.402(f)(2) to file a certificate regarding the reimbursement of antidumping duties prior to liquidation of the relevant entries during this POR. Failure to comply with this requirement could result in the Secretary's presumption that reimbursement of antidumping duties occurred and the subsequent assessment of double antidumping duties.

Notification Regarding Administrative Protective Orders

This notice also serves as a reminder to parties subject to administrative protective order (''APO'') of their responsibility concerning the return or destruction of proprietary information disclosed under APO in accordance with 19 CFR 351.305(a)(3), which continues to govern business proprietary information in this segment of the proceeding. Timely written notification of the return/destruction of APO materials or conversion to judicial protective order is hereby requested. Failure to comply with the regulations and terms of an APO is a violation which is subject to sanction.

We are issuing and publishing this determination in accordance with sections 751(a)(1) and 777(i)(1) of the Tariff Act of 1930, as amended.

Dated: November 30, 2012.

Gary Taverman,

Senior Advisor for Antidumping and Countervailing Duty Operations.

[FR Doc. 2012–29775 Filed 12–7–12; 8:45 am]

BILLING CODE 3510–DS–P

DEPARTMENT OF COMMERCE

International Trade Administration

[A–583–849]

Steel Wire Garment Hangers From Taiwan: Antidumping Duty Order

AGENCY: Import Administration, International Trade Administration, Department of Commerce.

DATES: *Effective Date:* December 10, 2012.

SUMMARY: Based on affirmative final determinations by the Department of Commerce (the ''Department'') and the International Trade Commission (the ''ITC''), the Department is issuing an antidumping duty order on steel wire garment hangers from Taiwan.

FOR FURTHER INFORMATION CONTACT: Paul Walker, AD/CVD Operations, Office 9, Import Administration, International Trade Administration, U.S. Department of Commerce, 14th Street and Constitution Avenue NW., Washington, DC 20230; telephone 202.482.0413.

SUPPLEMENTARY INFORMATION:

---

[1] *See Notice of Antidumping Duty Order: Certain Frozen Fish Fillets from the Socialist Republic of Vietnam,* 68 FR 47909 (August 12, 2003).

[2] *See Initiation of Antidumping and Countervailing Duty Administrative Reviews and Requests for Revocation,* 76 FR 61076 (October 3, 2011).

[3] *See* Agifish's submission dated January 3, 2012 at 1. *See* Petitioners' submission dated January 2, 2012 at 1.

[4] *See Certain Frozen Fish Fillets from the Socialist Republic of Vietnam: Preliminary Results of the Eighth Antidumping Duty Administrative Review and Ninth New Shipper Reviews, Partial Rescission of Review, and Intent to Revoke Order in Part,* 77 FR 56180 (September 12, 2012) (''*Preliminary Results*'').

Background

In accordance with sections 735(d) and 777(i)(1) of the Tariff Act of 1930, as amended (the ''Act''), on October 15, 2012, the Department published the *Final Determination* of sales at less than fair value in the antidumping duty investigation of steel wire garment hangers from Taiwan.[1] On November 29, 2012, the ITC notified the Department of its affirmative determination that an industry in the United States is materially injured within the meaning of section 735(b)(1)(A)(i) of the Act by reason of less-than-fair-value imports of steel wire garment hangers from Taiwan.[2] Pursuant to section 736(a) of the Act, the Department is publishing an antidumping duty order on the subject merchandise.

Scope of the Order

The merchandise subject to this order are steel wire garment hangers, fabricated from carbon steel wire, whether or not galvanized or painted, whether or not coated with latex or epoxy or similar gripping materials, and whether or not fashioned with paper covers or capes (with or without printing) or nonslip features such as saddles or tubes. These products may also be referred to by a commercial designation, such as shirt, suit, strut, caped, or latex (industrial) hangers.

Specifically excluded from the scope of the order are (a) wooden, plastic, and other garment hangers that are not made of steel wire; (b) steel wire garment hangers with swivel hooks; (c) steel wire garment hangers with clips permanently affixed; and (d) chrome plated steel wire garment hangers with a diameter of 3.4 mm or greater.

The products subject to the order are currently classified under U.S. Harmonized Tariff Schedule (''HTSUS'') subheadings 7326.20.0020 and 7323.99.9080. Although the HTSUS subheadings are provided for convenience and customs purposes, the written description of the merchandise is dispositive.

Antidumping Duty Order

As stated above, on November 29, 2012, in accordance with section 735(d) of the Act, the ITC notified the Department of its final determination in this investigation, in which it found material injury with respect to steel wire garment hangers from Taiwan.[3] Because the ITC determined that imports steel wire garment hangers from Taiwan are materially injuring a U.S. industry, all unliquidated entries of such merchandise from Taiwan, entered or withdrawn from warehouse, are subject to the assessment of antidumping duties.

Therefore, in accordance with section 736(a)(1) of the Act, the Department will direct U.S. Customs and Border Protection (''CBP'') to assess, upon further instruction by the Department, antidumping duties equal to the amounts listed below for all relevant entries of steel wire garment hangers from Taiwan. These antidumping duties will be assessed on unliquidated entries of steel wire garment hangers from Taiwan entered, or withdrawn from warehouse, for consumption on or after August 2, 2012, the date of publication of the *Preliminary Determination*.[4]

Continuation of Suspension of Liquidation

In accordance with section 735(c)(1)(B) of the Act, we will instruct CBP to continue to suspend liquidation on all entries of steel wire garment hangers from Taiwan. We will also instruct CBP to require cash deposits equal to the amounts as indicated below. These instructions suspending liquidation will remain in effect until further notice.

Accordingly, effective on the date of publication of the ITC's final affirmative injury determination, CBP will require, at the same time as importers would normally deposit estimated duties on this subject merchandise, a cash deposit equal to the estimated weighted-average antidumping duty margins listed below.[5]

Provisional Measures

Section 733(d) of the Act states that instructions issued pursuant to an affirmative preliminary determination may not remain in effect for more than four months except where exporters representing a significant proportion of exports of the subject merchandise request the Department to extend that four-month period to no more than six months. In the underlying investigation, the Department published the *Preliminary Determination* on August 2, 2012, and no exporters representing a significant proportion of exports of the subject merchandise requested that the Department extend the four-month period to six months. Therefore, the four-month period beginning on the date of the publication of the *Preliminary Determination* ended on November 30, 2012. Furthermore, section 737(b) of the Act states that definitive duties are to begin on the date of publication of the ITC's final injury determination.

Therefore, in accordance with section 733(d) of the Act and our practice, we will instruct CBP to terminate the suspension of liquidation and to liquidate, without regard to antidumping duties, unliquidated entries of steel wire garment hangers from Taiwan entered, or withdrawn from warehouse, for consumption after November 30, 2012, the date provisional measures expired, until and through the day preceding the date of publication of the ITC's final injury determination in the **Federal Register**. Suspension of liquidation will resume on the date of publication of the ITC's final injury determination in the **Federal Register**.

The weighted-average dumping margins are as follows:

Manufacturer/exporter	Margin (percent)
Golden Canyon Ltd	69.98
Taiwan Hanger Manufacturing Co., Ltd	125.43
All Others	69.98

This notice constitutes the antidumping duty order with respect to steel wire garment hangers from Taiwan pursuant to section 736(a) of the Act. Interested parties can find an updated list of antidumping duty orders currently in effect at *http://ia.ita.doc.gov/stats/iastats1.html.*

This order is published in accordance with section 736(a) of the Act and section 351.211 of the Department's regulations.

Dated: December 4, 2012.

Paul Piquado,

Assistant Secretary for Import Administration.

[FR Doc. 2012–29765 Filed 12–7–12; 8:45 am]

BILLING CODE 3510–DS–P

[1] *See Steel Wire Garment Hangers from Taiwan: Final Determination of Sales at Less Than Fair Value,* 77 FR 62492 (October 15, 2012) (''*Final Determination*'').

[2] *See Steel Wire Garment Hangers from Taiwan* (Investigation No. 731–TA–1197 (Final), USITC Publication 4363, November 2012).

[3] *Id.*

[4] *See Steel Wire Garment Hangers from Taiwan: Preliminary Determination of Sales at Less than Fair Value,* 77 FR 46055 (August 2, 2012) (''*Preliminary Determination*'').

[5] *See* section 736(a)(3) of the Act.

DEPARTMENT OF COMMERCE

International Trade Administration

[A–570–836]

Glycine From the People's Republic of China: Final Partial Affirmative Determination of Circumvention of the Antidumping Duty Order

AGENCY: Import Administration, International Trade Administration, Department of Commerce.

SUMMARY: The Department of Commerce (the Department) continues to determine that glycine processed by Salvi Chemical Industries Limited (Salvi) and AICO Laboratories India Ltd. (AICO) and exported to the United States from India is circumventing the antidumping duty order on glycine from the People's Republic of China (China), as provided in section 781(b) of the Tariff Act of 1930, as amended (the Act).[1] With respect to Paras Intermediates Pvt. Ltd. (Paras), the Department continues to find that Paras is not circumventing the *Order* because it is producing glycine from raw materials of Indian origin and exporting such merchandise to the United States.

DATES: *Effective Date:* December 10, 2012.

FOR FURTHER INFORMATION CONTACT: David Cordell, Dena Crossland, or Angelica Mendoza, AD/CVD Operations, Office 7, Import Administration, International Trade Administration, U.S. Department of Commerce, 14th Street and Constitution Avenue NW., Washington, DC 20230; telephone: (202) 482–0408, (202) 482–3362, or (202) 482–3019, respectively.

SUPPLEMENTARY INFORMATION:

Background

On April 10, 2012, the Department published in the **Federal Register** the affirmative preliminary determination that glycine processed by Salvi and AICO and exported to the United States from India was circumventing the *Order* as provided in section 781(b) of the Act.[2] In the same preliminary determination, the Department found that Paras was not circumventing the *Order* because it produced glycine from raw materials of Indian origin and exported such merchandise to the United States. Pursuant to section 781(e) of the Act, on April 3, 2012, the Department notified the U.S. International Trade Commission (ITC) of its preliminary partial affirmative determination of circumvention, in accordance with section 781(e) of the Act, and informed the ITC of its ability to request consultations with the Department regarding the possible inclusion of the products in question within the *Order* pursuant to section 781(e)(2) of the Act. The Department received no request for consultations from the ITC.

On April 30, 2012, GEO Specialty Chemicals, Inc. and Chattem Chemicals, Inc., (domestic interested parties) filed comments on the Department's *Preliminary Determination.* On April 30, 2012, AICO filed comments which were accidently misfiled in Import Administration's Antidumping and Countervailing Duty Centralized Electronic Service System (IA ACCESS), and which subsequently were filed correctly on May 21, 2012. On May 1, 2012, Salvi submitted its final version of its comments. On May 10, 2012, the Department received rebuttal comments from Paras, the Domestic Interested Parties, and joint rebuttal comments from AICO and Salvi. We held individual meetings with counsel to all parties on June 7 and June 13, 2012, and memoranda to the file recording those meetings were placed on the record of the proceeding.[3]

On October 31, 2012, the Department exercised its discretion to toll deadlines for the duration of the closure of the Federal Government from October 29 through October 30, 2012.[4] Thus, the deadline for this inquiry was extended by two days. Accordingly, the deadline for the final results of this anti-circumvention inquiry was extended from November 30, 2012, to December 2, 2012. Because December 2, 2012, falls on a weekend, the deadline for the final determination of this inquiry is December 3, 2012.[5]

Scope of the Order

The product covered by this order is glycine, which is a free-flowing crystalline material, like salt or sugar. Glycine is produced at varying levels of purity and is used as a sweetener/taste enhancer, a buffering agent, reabsorbable amino acid, chemical intermediate, and a metal complexing agent. This order covers glycine of all purity levels. Glycine is currently classified under subheading 2922.49.4020 of the Harmonized Tariff Schedule of the United States (HTSUS).[6] Although the HTSUS subheading is provided for convenience and customs purposes, the written description of the merchandise under the order is dispositive.

Scope of the Anti-Circumvention Inquiry

The product covered by this inquiry is glycine, as described in the ''Scope of the Order'' section, above, which is exported from India, but processed using Chinese-origin inputs (*e.g.,* crude or technical-grade glycine). This inquiry covers glycine produced by AICO, Paras, and Salvi. Salvi and Paras have stated on the record that they also self-produce glycine from Indian-origin inputs. The focus of this proceeding is to determine whether glycine is: (1) Manufactured in China; (2) processed by AICO, Paras, or Salvi in India; and (3) then exported to the United States as Indian-origin glycine constitutes circumvention of the *Order* under section 781(b) of the Act.

Analysis of Comments Received

All issues raised in the post-preliminary comments by parties in this proceeding are addressed in the Memorandum from Gary Taverman, Senior Advisor for Antidumping and Countervailing Duty Operations, to Ronald K. Lorentzen, Acting Assistant Secretary for Import Administration, ''Issues and Decision Memorandum for the Final Determination of the Anti-Circumvention Inquiry of the Antidumping Duty Order on Glycine from the People's Republic of China,'' dated December 3, 2012 (Decision Memorandum) and hereby adopted by this notice. A list of the issues which the parties raised and to which the Department responds in the Decision Memorandum is attached to this notice as Appendix I. The Decision Memorandum is a public document and is on file electronically via IA ACCESS. Access to IA ACCESS is available to registered users at *http://iaaccess.trade.gov* and in the Central

[1] *See Antidumping Duty Order: Glycine From the People's Republic of China,* 60 FR 16116 (March 29, 1995) (*Order*).

[2] *See Glycine From the People's Republic of China: Preliminary Partial Affirmative Determination of Circumvention of the Antidumping Duty Order and Initiation of Scope Inquiry,* 77 FR 21532 (April 10, 2012) (*Preliminary Determination*).

[3] *See* Memorandum to the File, dated June 12, 2012, with respect to the meeting with domestic interested parties on June 7, 2012, and the two Memoranda to the File, dated June 25, 2012, with respect to the two meetings with respondents on June 13, 2012.

[4] *See* Memorandum to the Record from Paul Piquado, As for Import Administration, regarding ''Tolling of Administrative Deadlines As a Result of the Government Closure During the Recent Hurricane,'' dated October 31, 2012.

[5] *See Notice of Clarification: Application of ''Next Business Day'' Rule for Administrative Determination Deadlines Pursuant to the Tariff Act of 1930, As Amended,* 70 FR 24533 (May 10, 2005).

[6] In a separate scope ruling, the Department determined that D(-) Phenylglycine Ethyl Dane Salt is outside the scope of the order. *See Notice of Scope Rulings and Anticircumvention Inquiries,* 62 FR 62288 (November 21, 1997).

Records Unit, room 7046 of the main Department of Commerce building. In addition, a complete version of the Decision Memorandum can be accessed directly on the Internet at *http://www.trade.gov/ia/*. The signed Decision Memorandum and the electronic versions of the Decision Memorandum are identical in content.

Final Determination of Circumvention

For the final determination, we continue to rely on the statutory criteria that we considered in making our *Preliminary Determination*.[7] Based on our review of the record evidence and our analysis of the comments received, the Department continues to find that glycine exported from India, but processed using Chinese-origin inputs (*e.g.,* crude or technical-grade glycine) by Salvi and AICO, is circumventing the antidumping duty order on glycine from China. The Department also continues to find Paras is not circumventing the antidumping duty order on glycine from the PRC because its exports of glycine to the United States were produced from India-origin inputs. For a complete discussion of the Department's analysis, *see* the accompanying Decision Memorandum.

Scope Ruling

The Department self-initiated a scope ruling in its *Preliminary Determination*.[8] On September 13, 2012, the Department issued its preliminary scope ruling.[9] The Department preliminarily determined that the processing of Chinese-origin technical grade or crude glycine, including but not limited to AAA–97TE, ACAA-97TE,[10] sodium glycinate and glycine slurry, is not substantially transformed into glycine of Indian origin and therefore such glycine remains within the scope of the *Order.*

The Department also adopted a certification requirement to ensure that merchandise meeting this scope clarification is properly identified as subject merchandise, and applied this certification to all imports of glycine from India, with the exception of AICO and Salvi, who were subject to the *Preliminary Determination,* in which glycine produced by AICO and Salvi was determined to be circumventing the *Order,* and therefore subject to the rates established for glycine from China. In the Final Scope Ruling, which is being issued concurrently with this final determination, we are affirming the decisions and actions outlined in the Preliminary Scope Ruling, which are addressed in the Final Scope Ruling.

Continuation of Suspension of Liquidation

The Department determines, pursuant to section 781(b) of the Act, that glycine processed by AICO and Salvi from Chinese-produced glycine covered under the narrative description of the scope of the *Order* constitutes subject merchandise and is therefore subject to cash deposit requirements. Accordingly, we are instructing CBP to continue to suspend liquidation and collect cash deposits on all unliquidated entries of glycine processed by AICO and Salvi and exported to the United States from India at the rate applicable to the relevant PRC-manufacturer, including the current PRC-wide entity if applicable.[11] In requiring that CBP collect cash deposits on AICO's or Salvi's exports of glycine found to be in circumvention of the antidumping order as appropriate, the Department is making no final determination of AICO's or Salvi's dumping duty liability at this time.

Accordingly, the Department will continue to direct CBP to suspend liquidation and to require a cash deposit of estimated duties at the applicable rate on unliquidated entries of glycine produced and/or exported by AICO or Salvi that were entered, or withdrawn from warehouse, for consumption on or after October 22, 2010, the date of initiation of the anti-circumvention inquiry.

The action we are taking with respect to the merchandise at issue does not constitute a determination of the final liability for payment of antidumping duties. The United States operates a retrospective system of duty assessment and under such a system the cash deposit is only an estimate. Final duties are not assessed at the time the subject merchandise is imported into the United States. Should AICO or Salvi wish to seek a determination of whether it is dumping, it can request a review of its exports so that the Department may determine the final dumping liability through the standard administrative process. As such, the Department is requiring that CBP collect cash deposits on AICO's or Salvi's exports of glycine found to be in circumvention of an antidumping order as appropriate, but is making no final determination of dumping herein. The Department also notes that AICO or Salvi may also request a changed circumstance review if they can show their exports of glycine to the United States are not processed from PRC-origin glycine.

Certifications Requirements

The Department has broadened its analysis and determined in its Final Scope Ruling that Chinese-origin glycine processed in India and exported to the United States is subject merchandise. In its Final Scope Ruling, the Department has instituted a country-wide certification mechanism, for all imports of glycine from India, to ensure that subject merchandise does not enter the United States as glycine from India. *See* Preliminary Scope Ruling and Final Scope Ruling for more details.

Notification to Interested Parties

This notice serves as the only reminder to parties subject to the administrative protective order (APO) of their responsibility concerning the return or destruction of proprietary information disclosed under APO in accordance with 19 CFR 351.305. Timely written notification of the return or destruction of APO materials or conversion to judicial protective order is hereby requested. Failure to comply with the regulations and terms of an APO is a violation which is subject to sanction.

This final affirmative circumvention determination is published in accordance with section 781(b) of the Act and 19 CFR 351.225

Dated: December 3, 2012.

Ronald K. Lorentzen,

Acting Assistant Secretary for Import Administration.

Appendix I

Discussion of the Issues

Issue 1: Whether to Include AICO's and Salvi's Affiliates in Any Anti-Circumvention Remedy

Issue 2: Whether to Apply a Country-Wide Remedy

Issue 3: Whether to Require Importer and/or

[7] *See Preliminary Determination,* 77 FR at 21533–34.

[8] *Id.* at 21535.

[9] *See* Memorandum from David Cordell and Dena Crossland, International Trade Analysts, AD/CVD Operations, Office 7, through Angelica Mendoza, Program Manager, AD/CVD Operations, Office 7, and Richard Weible, Director, AD/CVD Operations, Office 7, to Gary Taverman, Senior Advisor for Antidumping and Countervailing Duty Operations, ''Preliminary Scope Ruling concerning the Antidumping Duty Order on Glycine from the People's Republic of China (PRC),'' dated September 13, 2012 (Preliminary Scope Ruling).

[10] The Department notes that in the recommendation section of its Preliminary Scope Ruling and in the U.S. Customs and Border Protection (CBP) instructions at paragraph 6, the Department inadvertently referred to this product as ACA–97TE. The correct reference to the product is ACAA–97TE.

[11] *See, e.g., Certain Tissue Paper Products From the People's Republic of China: Affirmative Final Determination of Circumvention of the Antidumping Duty Order,* 76 FR 47551 (August 5, 2011), and accompanying Issues and Decision Memorandum at Comments 4 and 5. For a full discussion of this issue, *see* the accompanying Decision Memorandum at Comment 5.

Exporter Certification(s)
Issue 4: Whether Salvi's Value Added was Calculated Incorrectly
Issue 5: Whether the Production in India is Minor or Insignificant
Issue 6: Whether AICO Acted to the Best of its Ability in this Anti-Circumvention Inquiry

[FR Doc. 2012–29787 Filed 12–7–12; 8:45 am]

BILLING CODE 3510–DS–P

DEPARTMENT OF COMMERCE

International Trade Administration

[C–570–987]

Hardwood and Decorative Plywood From the People's Republic of China: Postponement of Preliminary Determination in the Countervailing Duty Investigation

AGENCY: Import Administration, International Trade Administration, Department of Commerce.

FOR FURTHER INFORMATION CONTACT: David Lindgren, Lingjun Wang or Toni Page, AD/CVD Operations, Office 6, Import Administration, International Trade Administration, U.S. Department of Commerce, 14th Street and Constitution Avenue NW., Washington, DC 20230; telephone: (202) 482–3870, (202) 482–2316 and (202) 482–1398, respectively.

SUPPLEMENTARY INFORMATION:

Background

On October 17, 2012, the Department of Commerce (the Department) initiated the countervailing duty (CVD) investigation of hardwood and decorative plywood, from the People's Republic of China.[1] Currently, the preliminary determination for this investigation is due no later than December 24, 2012. The Department originally extended the deadline for this preliminary determination from December 21, 2012 until December 23, 2012. As explained in the memorandum from the Assistant Secretary for Import Administration, the Department exercised its discretion to toll deadlines for the duration of the closure of the Federal Government from October 29, through October 30, 2012 [2] Therefore, the due date for the preliminary determination was extended to Sunday, December 23, 2012. However, it is the Department's long-standing practice to make a determination on the next business day when the statutory deadline falls on a weekend, federal holiday, or any other day when the Department is closed.[3] Accordingly, the preliminary determination is currently Monday, December 24, 2012.

Postponement of Due Date for the Preliminary Determination

Section 703(b)(1) of the Tariff Act of 1930, as amended (the Act), requires the Department to issue the preliminary determination in a CVD investigation within 65 days after the date on which the Department initiated the investigation. However, section 703(c)(1)(A) of the Act permits the Department to postpone making the preliminary determination until no later than 130 days after the date on which it initiated the investigation if the petitioner makes a timely request for an extension. In the instant investigation, the Coalition for Fair Trade of Hardwood Plywood and its individual members (Petitioners), made a timely request on November 28, 2012 that we postpone the preliminary CVD determination.[4]

The Department finds no compelling reason to deny the request. Therefore, pursuant to section 703(c)(1)(A) of the Act, we are extending the due date for the preliminary determination to no later than 130 days after the date on which this investigation was initiated, *i.e.,* to February 24, 2013. However, as discussed above, the Department is tolling all deadlines an additional two days due to the closing of the Federal Government in late October. Thus, the new deadline for the preliminary determination in this case will be February 26, 2013.

This notice is issued and published pursuant to section 703(c)(2) of the Act and 19 CFR 351.205(f)(1).

Dated: December 4, 2012.

Paul Piquado,

Assistant Secretary for Import Administration.

[FR Doc. 2012–29761 Filed 12–7–12; 8:45 am]

BILLING CODE 3510–DS–P

[1] *See Hardwood and Decorative Plywood From the People's Republic of China: Initiation of Countervailing Duty Investigation,* 77 FR 64955 (October 24, 2012).

[2] *See* Memorandum to the Record from Paul Piquado, Assistant Secretary for Import Administration, regarding ''Tolling of Administrative Deadlines as a Result of the Government Closure During Hurricane Sandy,'' dated October 31, 2012.

[3] *See Notice of Clarification: Application of ''Next Business Day'' Rule for Administrative Determination Deadlines Pursuant to the Tariff Act of 1930, As Amended,* 70 FR 24533 (May 10, 2005).

[4] *See* Petitioners' November 28, 2012 letter requesting postponement of the preliminary determination.

DEPARTMENT OF COMMERCE

International Trade Administration

[A–570–924]

Polyethylene Terephthalate Film, Sheet, and Strip From the People's Republic of China: Preliminary Results of Administrative Review; 2010–2011

AGENCY: Import Administration, International Trade Administration, Department of Commerce.

SUMMARY: In response to requests from interested parties, the Department of Commerce (the ''Department'') is conducting the third administrative review of the antidumping duty order on polyethylene terephthalate film, sheet, and strip (''PET film'') from the People's Republic of China (''PRC''), covering the period November 1, 2010, through October 31, 2011. The Department has preliminarily determined that during the period of review (''POR'') respondents in this proceeding have made sales of subject merchandise at less than normal value (''NV'').

DATES: Effective Date: December 10, 2012.

FOR FURTHER INFORMATION CONTACT: Thomas Martin or Jonathan Hill, AD/CVD Operations, Office 4, Import Administration, International Trade Administration, U.S. Department of Commerce, 14th Street and Constitution Avenue NW., Washington, DC 20230; telephone: (202) 482–3936 and (202) 482–3518 respectively.

SUPPLEMENTARY INFORMATION:

Scope of Order

The products covered by the order are all gauges of raw, pre-treated, or primed PET film, whether extruded or co-extruded.[1] PET film is classifiable under subheading 3920.62.00.90 of the Harmonized Tariff Schedule of the United States (''HTSUS''). Although the HTSUS subheadings are provided for convenience and customs purposes, our written description of the scope of the order is dispositive.

Methodology

The Department has conducted this review in accordance with section

[1] *See* Memorandum from Gary Taverman, Senior Advisor for Antidumping and Countervailing Duty Operations to Ronald K. Lorentzen, Acting Assistant Secretary for Import Administration ''Decision Memorandum for Preliminary Results of Antidumping Duty Administrative Review: Polyethylene Terephthalate Film, Sheet, and Strip from the People's Republic of China,'' dated December 3, 2012 (''Preliminary Decision Memorandum'') for a full description of the Scope of the Order.

751(a)(1)(A) of the Tariff Act of 1930, as amended (the ''Act''). Export prices and constructed export prices were calculated in accordance with section 772 of the Act. Because the PRC is a nonmarket economy within the meaning of section 771(18) of the Act, NV has been calculated in accordance with section 773(c) of the Act. Specifically, the respondents' factors of production have been valued in Indonesian prices, which is economically comparable to the PRC and is a significant producer of comparable merchandise.

For a full description of the methodology underlying our conclusions, please see the Preliminary Decision Memorandum, dated concurrently with these results and hereby adopted by this notice. The Preliminary Decision Memorandum is a public document and is on file electronically via Import Administration's Antidumping and Countervailing Duty Centralized Electronic Service System (''IA ACCESS''). IA ACCESS is available to registered users at *http://iaaccess.trade.gov* and in the Central Records Unit, room 7046 of the main Department of Commerce building. In addition, a complete version of the Preliminary Decision Memorandum can be accessed directly on the Internet at *http://www.trade.gov/ia/*. The signed Preliminary Decision Memorandum and the electronic versions of the Preliminary Decision Memorandum are identical in content.

Preliminary Results of Review

The Department has determined that the following preliminary dumping margins exist:

Exporter	Margin (percent)
DuPont Teijin China Limited	2.95
Shaoxing Xiangyu Green Packing Co., Ltd	0.00
Fuwei Films (Shandong) Co., Ltd	2.95
Tianjin Wanhua Co., Ltd. Sichuan	2.95
Dongfang Insulating Material Co., Ltd	2.95

Disclosure and Public Comment

The Department will disclose calculations performed for these preliminary results to the parties within five days of the date of publication of this notice in accordance with 19 CFR 351.224(b). Interested parties may submit written comments no later than 30 days after the date of publication of these preliminary results of review.[2] Rebuttals to written comments may be filed no later than five days after the written comments are filed.[3]

Any interested party may request a hearing within 30 days of publication of this notice.[4] Hearing requests should contain the following information: (1) The party's name, address, and telephone number; (2) the number of participants; and (3) a list of the issues to be discussed. Oral presentations will be limited to issues raised in the briefs. If a request for a hearing is made, parties will be notified of the time and date for the hearing to be held at the U.S. Department of Commerce, 1401 Constitution Avenue NW., Washington, DC 20230.[5]

The Department intends to issue the final results of this administrative review, which will include the results of its analysis of issues raised in any such comments, within 120 days of publication of these preliminary results, pursuant to section 751(a)(3)(A) of the Act.

Deadline for Submission of Publicly Available Surrogate Value Information

In accordance with 19 CFR 351.301(c)(3)(ii), the deadline for submission of publicly available information to value factors of production under 19 CFR 351.408(c) is 20 days after the date of publication of the preliminary results. In accordance with 19 CFR 351.301(c)(1), if an interested party submits factual information less than ten days before, on, or after (if the Department has extended the deadline) the applicable deadline for submission of such factual information, an interested party may submit factual information to rebut, clarify, or correct the factual information no later than ten days after such factual information is served on the interested party. However, the Department generally will not accept in the rebuttal submission additional or alternative surrogate value information not previously on the record, if the deadline for submission of surrogate value information has passed.[6] Furthermore, the Department generally will not accept business proprietary information in either the surrogate value submissions or the rebuttals thereto, as the regulation regarding the submission of surrogate values allows only for the submission of publicly available information.[7]

Assessment Rates

Upon issuing the final results of the review, the Department shall determine, and U.S. Customs and Border Protection (''CBP'') shall assess, antidumping duties on all appropriate entries. The Department intends to issue assessment instructions to CBP 15 days after the date of publication of the final results of review. For any individually examined respondents whose weighted-average dumping margin is above *de minimis,* we will calculate importer-specific *ad valorem* duty assessment rates based on the ratio of the total amount of dumping calculated for the importer's examined sales to the total entered value of those same sales in accordance with 19 CFR 351.212(b)(1).[8]

We will instruct CBP to assess antidumping duties on all appropriate entries covered by this review when the importer-specific assessment rate calculated in the final results of this review is above *de minimis.* Where either the respondent's weighted-average dumping margin is zero or *de minimis,* or an importer-specific assessment rate is zero or *de minimis,* we will instruct CBP to liquidate the appropriate entries without regard to antidumping duties. The Department recently announced a refinement to its assessment practice in NME cases. Pursuant to this refinement in practice, for entries that were not reported in the U.S. sales databases submitted by companies individually examined during this review, the Department will instruct CBP to liquidate such entries at the PRC-wide rate. In addition, if the Department determines that an exporter under review had no shipments of the subject merchandise, any suspended entries that entered under that exporter's case number (*i.e.,* at that exporter's rate) will be liquidated at the PRC-wide rate.[9]

The final results of this review shall be the basis for the assessment of antidumping duties on entries of merchandise covered by the final results of this review and for future deposits of estimated duties, where applicable.

[2] *See* 19 CFR 351.309(c).

[3] *See* 19 CFR 351.309(d).

[4] *See* 19 CFR 351.310(c).

[5] *See* 19 CFR 351.310(d).

[6] *See, e.g., Glycine from the People's Republic of China: Final Results of Antidumping Duty Administrative Review and Final Rescission, in Part,* 72 FR 58809 (October 17, 2007), and accompanying Issues and Decision Memorandum at Comment 2.

[7] *See* 19 CFR 351.301(c)(3).

[8] In these preliminary results, the Department applied the assessment rate calculation method adopted in *Antidumping Proceedings: Calculation of the Weighted-Average Dumping Margin and Assessment Rate in Certain Antidumping Proceedings: Final Modification,* 77 FR 8101 (February 14, 2012).

[9] For a full discussion of this practice, *see Non-Market Economy Antidumping Proceedings: Assessment of Antidumping Duties,* 76 FR 65694 (October 24, 2011).

Cash Deposit Requirements

The following cash deposit requirements will be effective upon publication of the final results of this administrative review for shipments of the subject merchandise from the PRC entered, or withdrawn from warehouse, for consumption on or after the publication date, as provided by section 751(a)(2)(C) of the Act: (1) For the DuPont Group, Green Packing, Dongfang, Fuwei Films, and Wanhua, which have separate rates, the cash deposit rate will be that established in the final results of this review (except, if the rate is zero or *de minimis,* zero cash deposit will be required); (2) for previously investigated or reviewed PRC and non-PRC exporters not listed above that received a separate rate in a prior segment of this proceeding, the cash deposit rate will continue to be the exporter-specific rate; (3) for all PRC exporters of subject merchandise that have not been found to be entitled to a separate rate, the cash deposit rate will be the PRC-wide rate of 76.72 percent; [10] and (4) for all non-PRC exporters of subject merchandise which have not received their own rate, the cash deposit rate will be the rate applicable to the PRC exporter that supplied that non-PRC exporter. These deposit requirements, when imposed, shall remain in effect until further notice.

Notification to Importers

This notice serves as a preliminary reminder to importers of their responsibility under 19 CFR 351.402(f)(2) to file a certificate regarding the reimbursement of antidumping duties prior to liquidation of the relevant entries during this review period. Failure to comply with this requirement could result in the Secretary's presumption that reimbursement of antidumping duties occurred and the subsequent assessment of double antidumping duties.

This administrative review and notice are in accordance with sections 751(a)(1) and 777(i) of the Act and 19 CFR 351.213.

Dated: December 3, 2012.

Ronald K. Lorentzen,

Acting Assistant Secretary for Import Administration.

Appendix I

List of Topics Discussed in the Preliminary Decision Memorandum

1. Separate Rates
2. Rate for Non-Selected Companies
3. Non-Market Economy Country Status
4. Surrogate Country
5. Date of Sale
6. Fair Value Comparisons
7. U.S. Price
8. Normal Value
9. Targeted Dumping
10. Factor Valuations
11. Currency Conversion

[FR Doc. 2012–29748 Filed 12–7–12; 8:45 am]

BILLING CODE 3510–DS–P

[10] *See Polyethylene Terephthalate Film, Sheet, and Strip from the People's Republic of China: Final Determination of Sales at Less Than Fair Value,* 73 FR 55039, 55041 (September 24, 2008).

DEPARTMENT OF COMMERCE

International Trade Administration

[C–552–813]

Steel Wire Garment Hangers From the Socialist Republic of Vietnam: Preliminary Affirmative Determination of Critical Circumstances

AGENCY: Import Administration, International Trade Administration, Department of Commerce.

SUMMARY: The Department of Commerce (the Department) has preliminarily determined that critical circumstances exist with respect to imports of steel wire garment hangers from the Socialist Republic of Vietnam (Vietnam) with the exception of imports from the Hamico Companies.[1]

DATES: *Effective Date:* December 10, 2012.

FOR FURTHER INFORMATION CONTACT: Robert Copyak, AD/CVD Operations, Office 3, Import Administration, International Trade Administration, U.S. Department of Commerce, Room CC114, 14th Street and Constitution Avenue NW., Washington, DC 20230; telephone: 202–482–2209.

SUPPLEMENTARY INFORMATION:

Case History

On December 29, 2011, the Department received a countervailing duty (CVD) petition concerning imports of garment hangers from Vietnam filed in proper form by M&B Metal Products Company, Inc., Innovative Fabrication LLC/Indy Hanger, and US Hanger Company, LLC (collectively, Petitioners).[2] This investigation was initiated on January 18, 2012.[3] The affirmative preliminary determination was published on June 4, 2012.[4]

On July 10, 2012, Petitioners alleged that critical circumstances exist with respect to imports of steel wire garment hangers from Vietnam and submitted U.S. Census Data in support of their allegation.[5] On July 23, 2012, the Department requested from the two mandatory respondents—the Hamico Companies and the Infinite Companies [6]—monthly shipment data of subject merchandise to the United States for the period August 2011 through May 2012.

On July 31, 2011, the Hamico Companies submitted to the Department their monthly shipment data of subject merchandise to the United States for the period August 2011 through May 2012.[7] At verification, the Department officials confirmed the accuracy of the Hamico Companies' shipment data.[8] The Infinite Companies did not submit their monthly shipment data of subject merchandise to the United States for the period August 2011 through May 2012. On August 3, 2012, the Infinite Companies withdrew from the investigation.[9]

Period of Investigation

The period for which we are measuring subsidies, or the period of investigation (POI), is calendar year 2011.

Scope of Investigation

The merchandise subject to the investigation is steel wire garment hangers, fabricated from carbon steel wire, whether or not galvanized or painted, whether or not coated with latex or epoxy or similar gripping

---

[1] The Hamico Companies are the South East Asia Hamico Export Joint Stock Company, Nam A Hamico Export Joint Stock Company, and Linh Sa Hamico Company Limited.

[2] *See* Petition for the Imposition of Countervailing Duties (Petition). A public version of the Petition and all other public documents and public versions for this investigation are available on the public file in the Central Records Unit (CRU), Room 7046 of the main Department of Commerce building.

[3] *See Steel Wire Garment Hangers From the Socialist Republic of Vietnam: Initiation of Countervailing Duty Investigation,* 77 FR 3737 (January 25, 2011), and accompanying Initiation Checklist.

[4] *See Certain Steel Wire Garment Hangers from the Socialist Republic of Vietnam: Preliminary Affirmative Countervailing Duty Determination and Alignment of Final Countervailing Duty Determination with Final Antidumping Duty Determination,* 77 FR 32930 (June 4, 2012) (*Preliminary Determination*).

[5] *See* Petitioners' Critical Circumstances Allegation (July 10, 2012), at Attachment 1.

[6] The Infinite Companies are Infinite Industrial Hanger Limited and Supreme Hanger Company Limited.

[7] *See* the Hamico Companies' critical circumstances questionnaire response (July 31, 2012).

[8] *See* the Department's September 24, 2012, verification report titled ''Verification of South East Asia Hamico Export Joint Stock Company (SEA Hamico), Nam A Hamico Export Joint Stock Company (Nam A Hamico) and Linh Sa Hamico Company Limited (Linh Sa Hamico) (collectively SEA Hamico)'' at 5 (filed on IA ACCESS on September 26, 2012).

[9] *See* the Infinite Companies' August 3, 2012 letter titled ''Steel Wire Garment Hangers from the Socialist Republic of Vietnam: Withdrawal from Investigation.''

materials, and/or whether or not fashioned with paper covers or capes (with or without printing) and/or nonslip features such as saddles or tubes. These products may also be referred to by a commercial designation, such as shirt, suit, strut, caped, or latex (industrial) hangers.

Specifically excluded from the scope of the investigation are (a) wooden, plastic, and other garment hangers that are not made of steel wire; (b) steel wire garment hangers with swivel hooks; (c) steel wire garment hangers with clips permanently affixed; and (d) chrome-plated steel wire garment hangers with a diameter of 3.4mm or greater.

The products subject to the investigation are currently classified under U.S. Harmonized Tariff Schedule (HTSUS) subheadings 7326.20.0020 and 7323.99.9080. Although the HTSUS subheadings are provided for convenience and customs purposes, the written description of the merchandise is dispositive.

Comments of the Parties

In their critical circumstances allegation, Petitioners also allege that there is a reasonable basis to believe that there are subsidies in this investigation which are inconsistent with the World Trade Organization Agreement on Subsidies and Countervailing Measures (Subsidies Agreement). Petitioners cite to the *Preliminary Determination*, in which the Department preliminarily determined that Hamico Companies and the Infinite Companies have received subsidies which are contingent on export performance.[10]

Petitioners also claim in their critical circumstances allegation that there have been massive imports of hangers in the four months following the filing of the petition on December 29, 2011. Petitioners provided data from the U.S. Department of Commerce and U.S. International Trade Commission (ITC), which they contend demonstrate that imports of subject merchandise increased by more than 15 percent, which is required to be considered ''massive'' under 19 CFR 351.206(h)(2).

Critical Circumstances Analysis

Section 703(e)(1) of the Act provides that the Department will determine that critical circumstances exist if there is a reasonable basis to believe or suspect that: (A) The alleged countervailable subsidy is inconsistent with the Subsidies Agreement, and (B) there have been massive imports of the subject merchandise over a relatively short period.

When determining whether an alleged countervailable subsidy is inconsistent with the Subsidies Agreement, the Department limits its findings to those subsidies contingent on export performance or use of domestic over imported goods (*i.e.*, those prohibited under Article 3 of the Subsidies Agreement).[11]

In determining whether imports of the subject merchandise have been ''massive,'' 19 CFR 351.206(h)(1) provides that the Department normally will examine: (i) The volume and value of the imports; (ii) seasonal trends; and (iii) the share of domestic consumption accounted for by the imports. In addition, the Department will not consider imports to be massive unless imports during the ''relatively short period'' (comparison period) have increased by at least 15 percent compared to imports during an ''immediately preceding period of comparable duration'' (base period). *See* 19 CFR 351.206(h)(2).

Section 351.206(i) of the Department's regulations defines ''relatively short period'' as normally being the period beginning on the date the proceeding commences (*i.e.*, the date the petition is filed) and ending at least three months later. For consideration of this allegation, we have used a five-month base period (*i.e.*, August 2011 through December 2011) and a five-month comparison period (*i.e.*, January 2012 through May 2012).

Hamico Companies

In the *Preliminary Determination*, the Department found that, during the POI, the Hamico Companies received countervailable benefits under two programs that are contingent upon export performance: Import Duty Exemptions and Export Loans. Therefore, we preliminarily determine that there is a reasonable basis to believe or suspect that these two programs are inconsistent with the Subsidies Agreement.

In determining whether there were massive imports from the Hamico Companies, we analyzed the Hamico Companies' monthly shipment data for the period August 2011 through May 2012. These data indicate that there was not a massive increase in shipments of subject merchandise to the United States by the Hamico Companies during the five-month period immediately following the filing of the petition on December 29, 2011. Specifically, shipments of subject merchandise to the United States from the Hamico Companies decreased, both in terms of volume and value.[12]

Infinite Companies

As noted in the case history, on August 3, 2012, the Infinite Companies withdrew from the investigation. Section 776(a)(2) of the Tariff Act of 1930, as amended (the Act) provides that, if an interested party (A) withholds information that has been requested by the Department, (B) fails to provide such information in a timely manner or in the form or manner requested, subject to subsections 782(c)(1) and (e) of the Act, (C) significantly impedes a proceeding under the antidumping statute, or (D) provides such information but the information cannot be verified, the Department shall, subject to subsection 782(d) of the Act, use facts otherwise available in reaching the applicable determination.

Information on the record of this investigation indicates that the Infinite Companies, in their August 3, 2012, letter to the Department, declined to further participate in the investigation. As a result, pursuant to section 776(a)(2)(D) of the Act, we find that the use of facts available is appropriate. Section 776(b) of the Act provides that, in selecting from among the facts otherwise available, the Department may employ an adverse inference if an interested party fails to cooperate by not acting to the best of its ability to comply with requests for information. We find that, because the Infinite Companies provided information that could not be verified, it has failed to cooperate to the best of its ability. Therefore, the Department finds that an adverse inference is appropriate.

As adverse facts available (AFA), we preliminarily determine that the Infinite Companies received countervailable benefits under programs that are contingent upon export performance. Also, as AFA, we preliminarily determine that the Infinite Companies made massive imports of subject merchandise over a relatively short period of time.

[10] *See* Petitioners' Critical Circumstances Allegation (July 10, 2012) at 2–4.

[11] *See, e.g., Notice of Preliminary Negative Determination of Critical Circumstances: Certain New Pneumatic Off-the-Road Tires From the People's Republic of China*, 73 FR 21588, 21589–90 (April 22, 2008), unchanged in *Final Affirmative Countervailing Duty Determination and Final Negative Critical Circumstances Determination: Carbon and Certain Alloy Steel Wire Rod From Germany*, 67 FR 55808, 55809 (August 30, 2002).

[12] *See* the Memorandum to the File from Robert Copyak, Senior Financial Analyst, AD/CVD Operations Office 3, titled ''Critical Circumstances Shipment Data Analysis,'' dated concurrently with this notice (Critical Circumstances Memorandum), at Attachment I.

All Other Exporters

With regard to whether imports of subject merchandise by the ''all other'' exporters of hangers from Vietnam were massive, we preliminarily determine that because there is evidence of the existence of countervailable subsidies that are inconsistent with the Subsidies Agreement, an analysis is warranted as to whether there was a massive increase in shipments by the ''all other'' companies, in accordance with 19 CFR 351.206(h)(1). Therefore, we analyzed, in accordance with 19 CFR 351.206(i), monthly shipment data for the period August 2011 through May 2012, using shipment data from the ITC's Dataweb, adjusted to remove the shipments by the respondents participating in the investigation.[13] For this analysis, we used only the data pertaining to the HTSUS numbers 7326.20.0020 and 7323.99.9080, which are the HTSUS categories under which a majority of the subject merchandise entered the United States. The data provided by the Hamico Companies and the data for shipments by other exporters from the ITC's Dataweb indicate there was a massive increase in shipments, as defined by 19 CFR 351.206(h). See Critical Circumstances Memorandum at Attachment II.

Conclusion

We preliminarily determine that critical circumstances do not exist for imports of steel wire garment hangers from Hamico Companies. Although the *Preliminary Determination* indicates that the Hamico Companies benefited from programs that are inconsistent with the Subsidies Agreement, the Hamico Companies' shipment data do not indicate a massive increase in shipments of subject merchandise to the United States. With regard to the Infinite Companies, as AFA, we preliminarily determine that the companies benefited from programs that are inconsistent with the Subsidies Agreement and that there was a massive increase in the companies' shipments of subject merchandise to the United States. Therefore, we preliminarily determine that critical circumstances do not exist with regard to shipments from one mandatory respondent, the Hamico Companies and, as AFA, preliminarily determine that critical circumstances exist with regard to shipments from the other mandatory respondent, the Infinite Companies.

We also preliminarily determine, based on our analysis of the shipment data provided by the Hamico Companies and the ITC Dataweb data, that critical circumstances exist for imports from ''all other'' exporters of steel wire garment hangers from Vietnam. The Department conducted its analysis of the shipment data for all other exporters of steel wire garment hangers by subtracting the total quantity and value of the Hamico Companies' reported quantity and value during the POI from the total quantity and value of all imports of steel wire garment hangers from Vietnam. The results of this analysis indicate that the imports attributed to all other imports exceeded the fifteen percent threshold. *See Critical Circumstances Memorandum* at Attachment 1. We will make a final determination concerning critical circumstances for steel wire garment hangers from Vietnam when we make our final countervailable subsidy determination in this investigation.

Suspension of Liquidation

In accordance with section 703(e)(2)(A) of the Act, we are directing U.S. Customs and Border Protection to suspend liquidation, with regard all exporters except the Hamico Companies, of any unliquidated entries of subject merchandise from the Vietnam entered, or withdrawn from warehouse for consumption, on or after March 6, 2012, which is 90 days prior to the date of publication of the *Preliminary Determination* in the ***Federal Register***.

ITC Notification

In accordance with section 703(f) of the Act, we will notify the ITC of our determination.

This determination is issued and published pursuant to sections 703(f) and 777(i)(1) of the Act.

Dated: December 4, 2012.

Paul Piquado,

Assistant Secretary for Import Administration.

[FR Doc. 2012–29767 Filed 12–7–12; 8:45 am]

BILLING CODE 3510–DS–P

[13] *See, e.g., Certain Oil Country Tubular Goods From the People's Republic of China: Preliminary Affirmative Countervailing Duty Determination, Preliminary Negative Critical Circumstances Determination*, 74 FR 47210, 47212 (September 15, 2009), unchanged in *Certain Oil Country Tubular Goods From the People's Republic of China: Final Affirmative Countervailing Duty Determination: Final Negative Critical Circumstances Determination,* 74 FR 64045 (December 7, 2009).

DEPARTMENT OF COMMERCE

National Oceanic and Atmospheric Administration

Proposed Information Collection; Comment Request; Survey of Shore-Based and Boat-Based Non-Commercial Fishing on St. Croix, U.S. Virgin Islands

AGENCY: National Oceanic and Atmospheric Administration (NOAA), Commerce.

ACTION: Notice.

SUMMARY: The Department of Commerce, as part of its continuing effort to reduce paperwork and respondent burden, invites the general public and other Federal agencies to take this opportunity to comment on proposed and/or continuing information collections, as required by the Paperwork Reduction Act of 1995.

DATES: Written comments must be submitted on or before February 8, 2013.

ADDRESSES: Direct all written comments to Jennifer Jessup, Departmental Paperwork Clearance Officer, Department of Commerce, Room 6616, 14th and Constitution Avenue NW., Washington, DC 20230 (or via the Internet at *JJessup@doc.gov*).

FOR FURTHER INFORMATION CONTACT: Requests for additional information or copies of the information collection instrument and instructions should be directed to Theresa L. Goedeke, (301) 713–3028 x 237 or *theresa.goedeke@noaa.gov*.

SUPPLEMENTARY INFORMATION:

I. Abstract

This request is for a new information collection to benefit local fishery managers in the U.S. Virgin Islands (USVI). Non-commercial fishing is an important activity on St. Croix, USVI yet robust data characterizing the catch, effort and cultural attributes of such fishing are limited. Without these basic data on the non-commercial fishery on St. Croix, it is not possible to develop required fishery management plans. Consequently, local fishery managers have asked for collection of information required to make management decisions, information that will help them to balance the need for more effective fishery management with social, economic and cultural imperatives of the region.

Researchers propose to conduct two distinct data collection efforts, Collection A and Collection B. Collection A will consist of a survey of non-commercial, shore-based fishers. This survey will ascertain the catch,

effort, and socioeconomic characteristics of fishers using this mode of fishing on St. Croix. Collection B will be a survey of boat-based, non-commercial fishers on St. Croix to document levels of catch and effort for this mode of fishing.

The data gathered will be used to describe recreational and subsistence sectors in St. Croix, and evaluate the socio-economic impacts of federal regulatory actions.

In addition, the information will be used to strengthen and improve fishery management decision-making, satisfy legal mandates under Executive Order 12866, the Magnuson Stevens Fishery Conservation and Management Act (U.S.C. 1801 *et seq.*), the Regulatory Flexibility Act, the Endangered Species Act, and the National Environmental Policy Act, and other pertinent statues.

II. Method of Collection

Collection A, which will take place over a 12-month period, will be comprised of two data collection activities: (1) A survey of shore-based fishers, and (2) counts of shore-based fishers. Collection B, which will take place over a 24-month period, will include two data collection activities: (1) A survey of fishers at boat ramps and, (2) a count of boat trailers or vehicles at launch sites where surveys are administered.

III. Data

OMB Control Number: None.

Form Number: None.

Type of Review: Regular submission (request for a new information collection).

Affected Public: Individuals or households.

Estimated Number of Respondents: 5,400.

Estimated Time per Response: Collection A survey, 10 minutes; Collection B survey, 5 minutes.

Estimated Total Annual Burden Hours: 484 (Collection A, 67; Collection B, 417).

Estimated Total Annual Cost to Public: $0 in recordkeeping/reporting costs.

IV. Request for Comments

Comments are invited on: (a) Whether the proposed collection of information is necessary for the proper performance of the functions of the agency, including whether the information shall have practical utility; (b) the accuracy of the agency's estimate of the burden (including hours and cost) of the proposed collection of information; (c) ways to enhance the quality, utility, and clarity of the information to be collected; and (d) ways to minimize the burden of the collection of information on respondents, including through the use of automated collection techniques or other forms of information technology.

Comments submitted in response to this notice will be summarized and/or included in the request for OMB approval of this information collection; they also will become a matter of public record.

Dated: December 4, 2012.

Gwellnar Banks,

Management Analyst, Office of the Chief Information Officer.

[FR Doc. 2012–29703 Filed 12–7–12; 8:45 am]

BILLING CODE 3510–22–P

DEPARTMENT OF COMMERCE

National Oceanic and Atmospheric Administration

RIN 0648–XC358

Appointments to a Recreational Fisheries Working Group by the Marine Fisheries Advisory Committee

AGENCY: National Marine Fisheries Service (NMFS), National Oceanic and Atmospheric Administration (NOAA), Commerce.

ACTION: Notice; request for nominations.

SUMMARY: Nominations are being solicited for appointment to a Recreational Fisheries Working Group of the Marine Fisheries Advisory Committee (MAFAC). The members will be appointed by MAFAC in consultation with NOAA and will serve for an initial term of up to two years, with the option to apply to be re-appointed. The term would begin in February or March 2013. Nominees should possess demonstrable expertise in the management or business of recreational fishing and/or fisheries science; a well-informed background in recreational fisheries issues; an operational knowledge of federal agencies and interactions with the Fishery Management Councils and/or regional and state partners; and be able to fulfill the time commitments required for up to two annual meetings.

DATES: Applications must be received on or before January 9, 2013, via mail or email.

ADDRESSES: Applications should be sent to Danielle Rioux, Recreational Fisheries Policy Specialist, NMFS SF–13336, 1315 East-West Highway, Silver Spring, MD 20910 or *Danielle.Rioux@noaa.gov.*

FOR FURTHER INFORMATION CONTACT: Danielle Rioux, Recreational Fisheries Policy Specialist; (301) 427–8516; email: *Danielle.Rioux@noaa.gov.*

SUPPLEMENTARY INFORMATION: MAFAC is the only Federal advisory committee with the responsibility to advise the Secretary of Commerce (Secretary) on all matters concerning living marine resources that are the responsibility of the Department of Commerce. MAFAC established a Recreational Fisheries Working Group (RFWG) in 2010, to assist it in the development of recommendations to the Secretary on regulations, policies and programs critical to the mission and goals of the NMFS. The RFWG is composed of people with a specific interest and qualification related to NOAA's recreation-related activities. Beginning in 2013, half of the RFWG appointments will expire every year, and applications/nominations will be solicited each year to fill these seats. The RFWG is expected to have no more than 25 members to be selected from a balance of the diverse national and regional recreational fisheries sector and community perspectives. With this solicitation NOAA will fill 6 currently empty seats, as well as any vacancies that develop during the reappointment process.

MAFAC established the RFWG to advise MAFAC on issues of importance to the recreational fishing community, including, but not limited to: (1) Review and possible revision of the NOAA National and Regional Recreational Fisheries Action Agendas, (2) planning for a second National Saltwater Recreational Fisheries Summit, and such other recreational fisheries issues and activities identified as appropriate by MAFAC.

The RGWG members cannot be employed by NOAA or a member of a Regional Fishery Management Council or have been registered as a lobbyist with the Secretary of the Senate and the Clerk of the House of Representatives within two years of the date of appointment. Membership is voluntary, and except for reimbursable travel and related expenses, service is without pay.

Each submission should provide the nominee's name and affiliation (i.e. private angler, charterboat, trade association, etc.) and contact information including address, phone number, fax number, and email address (if available); and should describe the nominee's qualifying experience in the following areas:

1. Expertise in the management or business of recreational fishing, and/or fisheries science;

2. Informed background in recreational fisheries issues; and

3. Operational knowledge of federal agencies and interactions with the Fishery Management Councils and/or regional and state partners.

Letters of support will be accepted, and may be submitted with the application or separately. Applications and letters of support should be sent to (see **ADDRESSES**) and must be received by (see **DATES**). The full text of the MAFAC Charter and its current membership can be viewed at the NMFS Web page at *www.nmfs.noaa.gov/ocs/mafac/.*

Dated: December 5, 2012.

Samuel D. Rauch III,

Deputy Assistant Administrator for Regulatory Programs, performing the functions and duties of the Assistant Administrator for Fisheries.

[FR Doc. 2012–29758 Filed 12–7–12; 8:45 am]

BILLING CODE 3510–22–P

DEPARTMENT OF COMMERCE

National Oceanic and Atmospheric Administration

RIN 0648–XC374

Takes of Marine Mammals Incidental to Specified Activities; Taking Marine Mammals Incidental to Seismic Survey in Cook Inlet, AK

AGENCY: National Marine Fisheries Service (NMFS), National Oceanic and Atmospheric Administration (NOAA), Commerce.

ACTION: Notice; proposed incidental harassment authorization; request for comments.

SUMMARY: NMFS received an application from Apache Alaska Corporation (Apache) for an Incidental Harassment Authorization (IHA) to take marine mammals, by harassment, incidental to a proposed 3D seismic survey in Cook Inlet, Alaska, between January 2013 and January 2014. Pursuant to the Marine Mammal Protection Act (MMPA), NMFS requests comments on its proposal to issue an IHA to Apache to take, by Level B harassment only, five species of marine mammals during the specified activity.

DATES: Comments and information must be received no later than January 9, 2013.

ADDRESSES: Comments on the application should be addressed to Michael Payne, Chief, Permits and Conservation Division, Office of Protected Resources, National Marine Fisheries Service, 1315 East-West Highway, Silver Spring, MD 20910. The mailbox address for providing email comments is *ITP.Hopper@noaa.gov.* NMFS is not responsible for email comments sent to addresses other than the one provided here. Comments sent via email, including all attachments, must not exceed a 10-megabyte file size.

Instructions: All comments received are a part of the public record and will generally be posted to *http://www.nmfs.noaa.gov/pr/permits/incidental.htm* without change. All Personal Identifying Information (for example, name, address, etc.) voluntarily submitted by the commenter may be publicly accessible. Do not submit Confidential Business Information or otherwise sensitive or protected information.

An electronic copy of the application used in this document may be obtained by writing to the address specified above, telephoning the contact listed below (see **FOR FURTHER INFORMATION CONTACT**), or visiting the Internet at: *http://www.nmfs.noaa.gov/pr/permits/incidental.htm.* Documents cited in this notice may also be viewed, by appointment, during regular business hours, at the aforementioned address.

FOR FURTHER INFORMATION CONTACT: Brian D. Hopper, Office of Protected Resources, NMFS, (301) 427–8401.

SUPPLEMENTARY INFORMATION:

Background

Sections 101(a)(5)(A) and (D) of the MMPA (16 U.S.C. 1361 *et seq.*) direct the Secretary of Commerce to allow, upon request, the incidental, but not intentional, taking of small numbers of marine mammals by U.S. citizens who engage in a specified activity (other than commercial fishing) within a specified geographical region if certain findings are made and either regulations are issued or, if the taking is limited to harassment, a notice of a proposed authorization is provided to the public for review.

Authorization for incidental takings shall be granted if NMFS finds that the taking will have a negligible impact on the species or stock(s), will not have an unmitigable adverse impact on the availability of the species or stock(s) for subsistence uses (where relevant), and if the permissible methods of taking and requirements pertaining to the mitigation, monitoring and reporting of such takings are set forth. NMFS has defined ''negligible impact'' in 50 CFR 216.103 as ''* * * an impact resulting from the specified activity that cannot be reasonably expected to, and is not reasonably likely to, adversely affect the species or stock through effects on annual rates of recruitment or survival.''

Section 101(a)(5)(D) of the MMPA established an expedited process by which citizens of the U.S. can apply for an authorization to incidentally take small numbers of marine mammals by harassment. Section 101(a)(5)(D) establishes a 45-day time limit for NMFS review of an application followed by a 30-day public notice and comment period on any proposed authorizations for the incidental harassment of marine mammals. Within 45 days of the close of the comment period, NMFS must either issue or deny the authorization.

Except with respect to certain activities not pertinent here, the MMPA defines ''harassment'' as: ''any act of pursuit, torment, or annoyance which (i) has the potential to injure a marine mammal or marine mammal stock in the wild [Level A harassment]; or (ii) has the potential to disturb a marine mammal or marine mammal stock in the wild by causing disruption of behavioral patterns, including, but not limited to, migration, breathing, nursing, breeding, feeding, or sheltering [Level B harassment].''

Summary of Request

NMFS received an application on June 15, 2012, from Apache for the taking, by harassment, of marine mammals incidental to a 3D seismic survey program in Cook Inlet, Alaska. This is the second IHA application NMFS has received from Apache for takes of marine mammals incidental to conducting a seismic survey in Cook Inlet. On April 30, 2012, NMFS issued a one-year IHA to Apache for their first season of seismic acquisition in Cook Inlet (77 FR 27720). Except for the location and the size of the survey area, the activities proposed for the second survey season are essentially the same as those conducted during the first season.

The proposed 3D seismic surveys would employ the use of two source vessels. Each source vessel would be equipped with compressors and 2400 in^3 air gun arrays, as well as additional lower-powered and higher frequency survey equipment for collecting bathymetric and shallow sub-bottom data. In addition, one source vessel would be equipped with a 440 in^3 shallow water air gun array, which it can deploy at high tide in the intertidal area in less than 1.8 m of water. The proposed survey would take place in Cook Inlet, and during the second survey season Apache anticipates completing ~1,010 km^2 of seismic acquisition in an area that extends from just south of Anchor Point along the east coast extending up to Point Possession and along the west coast from the

McArthur River up to the Beluga river, in water depths of 0–128 m (0–420 ft).

In Area 2, Apache intends to mobilize crews and equipment in January 2012 in order to be ready to conduct offshore/transition (intertidal) zone marine surveys in March-April 2013, but could commence sooner if weather conditions permit. Nearshore areas adjacent to uplands and offshore areas will be surveyed between April and September 2013. Impacts to marine mammals may occur from noise produced from active acoustic sources (primarily air guns) used in the surveys.

Description of the Specified Activity

In 2010, Apache acquired over 300,000 acres of oil and gas leases in Cook Inlet with the primary objective to explore for and develop oil fields. In the spring of 2011, Apache conducted a seismic test program to evaluate the feasibility of using new nodal (i.e., no cables) technology seismic recording equipment for operations in the Cook Inlet environment and to test various seismic acquisition parameters to finalize the design for a 3D seismic program in Cook Inlet. The test program took place in late March 2011 and results indicated that the nodal technology was feasible in the Cook Inlet environment. Apache proposes to conduct a phased 3D seismic survey program throughout Cook Inlet over the course of the next three to five years. The first area surveyed—and the subject of the IHA issued in April 2012—was located in mid-Cook Inlet extending along the west coast from the Big River up to south of the Beluga River, and on the east coast from Salamantof on the Kenai peninsula to 4.4 miles north of the Swanson River. The second area to be surveyed—and the subject of this IHA—would cover a lower portion of Cook Inlet, but also includes all of Area 1.

The proposed operations are essentially the same as those that were conducted in Area 1 under the IHA for the first seismic season. The proposed operations would again be performed from multiple vessels. Apache would employ the use of two source vessels. Each source vessel would be equipped with compressors and 2400 in^3 air gun arrays. In addition, one source vessel would be equipped with a 440 in^3 shallow water air gun array, which it can deploy at high tide in the intertidal area in less than 1.8 m of water. Three shallow draft vessels would support cable/nodal deployment and retrieval operations, and one mitigation/chase vessel would be used, which would also provide berthing for the Protected Species Observers (PSOs). Finally, two smaller jet boats would be used for personnel transport and node support in the extremely shallow water of the intertidal area. For additional information, such as vessel specifications, see Apache's application.

Acquiring ~1,010 km^2 would take approximately 160 days to complete over the course of 8–9 months. Apache anticipates conducting survey operations 24 hours per day. During each 24 hour period, seismic operations would be active; however air guns would only be used for approximately 2.5 hours during each of the slack tide periods. There are approximately four slack tide periods in a 24-hour day, therefore, air gun operations would be active during approximately 10–12 hours per day, if weather conditions allow.

3D Seismic Surveys

Seismic surveys are designed to collect bathymetric and sub-seafloor data that allow the evaluation of potential shallow faults, gas zones, and archeological features at prospective exploration drilling locations. Data are typically collected using multiple types of acoustic equipment. During the surveys, Apache proposes to use the following in-water acoustic sources: two 2400 in^3 air gun arrays; a single 440 in^3 air gun array; a 10 in^3 air gun; a Scout Ultra-Short Baseline (USBL) Transceiver; and a Lightweight Release (LR) USBL Transponder. Apache successfully measured the sounds produced by the air guns and pingers during a 2D test program conducted in March 2011 and found levels to be consistent with the modeled mitigation threshold levels (180 dB for cetaceans, 190 dB for pinnipeds); therefore, a sound source verification study would not be included in the proposed 3D seismic survey.

In addition, Apache plans to detonate 4 kg of Orica OSX Pentolite explosives onshore to acquire data. Except for the explosives, the operating frequencies and estimated source levels of the survey equipment are provided below.

(1) Airguns

The 2400 in^3 air gun arrays and the 440 in^3 air gun array would be used to obtain geological data during the survey. The acoustic source level of the 2400 in^3 air gun array was predicted using an air gun array source model (AASM) developed by JASCO. The AASM simulates the expansion and oscillation of the air bubbles generated by each air gun within a seismic array, taking into account pressure interaction effects between bubbles from different air guns. It includes effects from surface-reflected pressure waves, heat transfer from the bubbles to the surrounding water, and the movements of bubbles due to their buoyancy. The model outputs high-resolution air gun pressure signatures for each air gun, which are superimposed with the appropriate time delays to yield the overall array source signature in any direction. The 190, 180, and 160 dB_{rms} re 1 μPa isopleths were estimated at three different water depths (5 m, 25 m, and 45 m) for nearshore surveys and at 80 m for channel surveys. The distances to these thresholds for the nearshore survey locations are provided in Table 1 and correspond to the three transects modeled at each site in the onshore, offshore, and parallel to shore directions. The distances to the thresholds for the channel survey locations are provided in Table 2 and correspond to the broadside and endfire directions. The areas ensonified to the 160 dB isopleth for the nearshore survey are provided in Table 3. The area ensonifed to the 160 dB isopleth for the channel survey is 389 km^2.

TABLE 1—DISTANCES TO SOUND THRESHOLDS FOR THE NEARSHORE SURVEYS

Threshold (dB re 1 μPa)	Water depth at source location (m)	Distance in the onshore direction (km)	Distance in the offshore direction (km)	Distance in the parallel to shore direction (km)
160	5	0.85	3.91	1.48
	25	4.70	6.41	6.34
	45	5.57	4.91	6.10
180	5	0.46	0.60	0.54
	25	1.06	1.07	1.42
	45	0.70	0.83	0.89

TABLE 1—DISTANCES TO SOUND THRESHOLDS FOR THE NEARSHORE SURVEYS—Continued

Threshold (dB re 1 μPa)	Water depth at source location (m)	Distance in the onshore direction (km)	Distance in the offshore direction (km)	Distance in the parallel to shore direction (km)
190	5	0.28	0.33	0.33
	25	0.35	0.36	0.44
	45	0.10	0.10	0.51

TABLE 2—DISTANCE TO SOUND THRESHOLDS FOR THE CHANNEL SURVEYS

Threshold (dB re 1 μPa)	Water depth at source location (m)	Distance in the broadside direction (km)	Distance in the endfire direction (km)
160	80	4.24	4.89
180	80	0.91	0.98
190	80	0.15	0.18

TABLE 3—AREAS ENSONIFIED TO 160 DB FOR NEARSHORE SURVEYS

Nearshore survey depth classification	Depth range (m)	Area ensonifed to 160 dB (km^2)
Shallow	5–21	346
Mid-Depth	21–38	458
Deep	38–54	455

(2) Pingers

These instruments would be operated during survey operations to determine the exact position of the nodes after they have been placed on the seafloor. One device, the Scout Ultra-Short Baseline Transceiver, operates at frequencies between 33 and 55 kHz with a source level of 188 dB re 1 μPa at 1 m. The other device, an LR Ultra-Short Baseline Transponder, operates at a frequency of 35–50 kHz at a source level of 185 dB re 1 μPa at 1 m. With respect to these two sources, Apache provided and NMFS relied on the distances to the Level B harassment thresholds estimated for the ''louder'' of the two; therefore, assuming a simple spreading loss of 20 log R (where R is radius), with a source level of 188 dB the distance to the 190, 180, and 160 dB isopleths would be 1, 3, and 25 m, respectively. Another technique for locating the nodes in deeper water is called Ocean Bottom Receiver Location, which uses a small volume air gun (10 in^3) firing parallel to the node line.

(3) Detonations of Explosives

The onshore areas would be surveyed using explosives as the sound source. Seismic surveys on land use ''shot holes'' that are drilled every 50 m along source lines and are oriented perpendicular to the receiver lines and parallel to the coast. At each source location, Apache would drill to the prescribed hole depth of approximately 10 m and load it with 4 kg of explosives. The hole would then capped with a ''smart cap'' that makes it impossible to detonate the explosive without the proper detonator. During a 2D test program conducted in March 2011, Apache deployed acoustic recorders to measure underwater sound produced by land-based explosives; however, the resulting measurements were inconclusive and Apache conducted a sound source verification (SSV) study in September 2011 to characterize the underwater received sound levels and determine if marine mammal monitoring would be required for future onshore operations. The SSV study found that in-water noise generated from explosive detonations onshore did not rise to a level that would result in the harassment of marine mammals in the water.

Description of Marine Mammals in the Area of the Specified Activity

The marine mammal species under NMFS's jurisdiction that could occur near operations in Cook Inlet include three cetacean species, all odontocetes (toothed whales): beluga whale (*Delphinapterus leucas*), killer whale (*Orcinus orca*), and harbor porpoise (*Phocoena phocoena*), and two pinniped species: harbor seal (*Phoca vitulina richardsi*) and Steller sea lions (*Eumetopias jubatus*). The marine mammal species that is likely to be encountered most widely (in space and time) throughout the period of the planned surveys is the harbor seal.

Of the five marine mammal species likely to occur in the proposed marine survey area, only Cook Inlet beluga whales and Steller sea lions are listed as endangered under the ESA (Steller sea lions are listed as two distinct population segments (DPSs), an eastern and a western DPS; the relevant DPS in Cook Inlet is the western DPS). These species are also designated as ''depleted'' under the MMPA. Despite these designations, Cook Inlet beluga whales and the western DPS of Steller sea lions have not made significant progress towards recovery. The Cook Inlet population of beluga whales has been decreasing at a rate of 1.5 percent annually for nearly a decade (Allen and Angliss, 2010). With respect to Steller sea lions, results of aerial surveys conducted in 2008 (Fritz *et al.,* 2008) confirmed that the recent (2004–2008) overall trend in the western population of adult and juvenile Steller sea lions in Alaska is stable or possibly in decline; however, there continues to be considerable regional variability in recent trends. Pursuant to the ESA, critical habitat has been designated for Cook Inlet beluga whales and Steller sea lions. The proposed action falls within critical habitat designated in Cook Inlet for beluga whales, but is not within

critical habitat designated for Steller sea lions. The portion of beluga whale critical habitat—identified as Area 2 in the critical habitat designation—where the seismic survey will occur is located south of the Area 1 critical habitat where belugas are particularly vulnerable to impacts due to their high seasonal densities and the biological importance of the area for foraging, nursery, and predator avoidance. Area 2 is largely based on dispersed fall and winter feeding and transit areas in waters where whales typically appear in smaller densities or deeper waters (76 FR 20180, April 11, 2011).

Cetaceans

Beluga Whales—Cook Inlet beluga whales reside in Cook Inlet year-round although their distribution and density changes seasonally. Factors that are likely to influence beluga whale distribution within the inlet include prey availability, predation pressure, sea-ice cover, and other environmental factors, reproduction, sex and age class, and human activities (Rugh *et al.,* 2000; NMFS 2008). Seasonal movement and density patterns as well as site fidelity appear to be closely linked to prey availability, coinciding with seasonal salmon and eulachon concentrations (Moore *et al.,* 2000). For example, during spring and summer, beluga whales are generally concentrated near the warmer waters of river mouths where prey availability is high and predator occurrence in low (Huntington 2000; Moore *et al.,* 2000). During the winter (November to April), belugas disperse throughout the upper and mid-inlet areas, with animals found between Kalgin Island and Point Possession (Rugh *et al.,* 2000). During these months, there are generally fewer observations of beluga whales in the Anchorage and Knik Arm area (NMML 2004; Rugh *et al.,* 2004).

Beluga whales use several areas of the upper Cook Inlet for repeated summer and fall feeding. The primary hotspots for beluga feeding include the Big and Little Susitna rivers, Eagle Bay to Eklutna River, Ivan Slough, Theodore River, Lewis River, and Chickaloon River and Bay (NMFS 2008). Availability of prey species appears to be the most influential environmental variable affecting Cook Inlet beluga whale distribution and relative abundance (Moore *et al.* 2000). The patterns and timing of eulachon and salmon runs have a strong influence on beluga whale feeding behavior and their seasonal movements (Nemeth *et al.,* 2007; NMFS 2008). The presence of prey species may account for the seasonal changes in beluga group size and composition (Moore *et al.,* 2000). Aerial and vessel-based monitoring conducted by Apache during the March 2011 2D test program in Cook Inlet reported 33 beluga sightings. One of the sightings was of a large group (~25 individuals on March 27, 2011) of feeding/milling belugas near the mouth of the Drift River. Also on March 27, 2011, PSOs onboard the *M/V Dreamcatcher* reported a group of seven beluga whales approximately 0.5 nm from the vessel. Land-based PSOs were able to observe this group of beluga whales for approximately 2.5 hrs. A single beluga whale was observed near the mouth of the Drift River by the aerial-based monitors on March 28, 2011, prior to the seismic ramp-up period. If belugas are present during the late summer/early fall, they are more likely to occur in shallow areas near river mouths in upper Cook Inlet. For example, no beluga whales were sighted in Trading Bay during the SSV conducted in September 2011 because during this time of year they are more likely to be in the upper regions of Cook Inlet. Expected densities were calculated from the annual aerial surveys conducted by NMFS between 2000 and 2011 (Rugh *et al.* 2000, 2001, 2002, 2003, 2004, 2005, 2006, 2007; Shelden *et al.* 2008, 2009, 2010; Hobbs *et al.* 2011). Those densities are presented below in Table 5.

Killer Whales—In general, killer whales are rare in upper Cook Inlet, where transient killer whales are known to feed on beluga whales and resident killer whales are known to feed on anadromous fish (Shelden *et al.,* 2003). The availability of these prey species largely determines the likeliest times for killer whales to be in the area. Between 1993 and 2004, 23 sightings of killer whales were reported in the lower Cook Inlet during aerial surveys by Rugh *et al.* (2005). Surveys conducted over a span of 20 years by Shelden *et al.* (2003) reported 11 sightings in upper Cook Inlet between Turnagain Arm, Susitna Flats, and Knik Arm. No killer whales were spotted during recent surveys by Funk *et al.* (2005), Ireland *et al.* (2005), Brueggeman *et al.* (2007a, 2007b, 2008), or Prevel Ramos *et al.* (2006, 2008). Eleven killer whale strandings have been reported in Turnagain Arm, six in May 1991 and five in August 1993. Therefore, very few killer whales, if any, are expected to approach or be in the vicinity of the action area.

Harbor Porpoise—The most recent estimated density for harbor porpoises in Cook Inlet is 7.2 per 1,000 km^2 (Dahlheim *et al.,* 2000) indicating that only a small number use Cook Inlet. Harbor porpoise have been reported in lower Cook Inlet from Cape Douglas to the West Foreland, Kachemak Bay, and offshore (Rugh *et al.,* 2005). Small numbers of harbor porpoises have been consistently reported in upper Cook Inlet between April and October, except for a recent survey that recorded higher than usual numbers. Prevel Ramos *et al.* (2008) reported 17 harbor porpoises from spring to fall 2006, while other studies reported 14 in the spring of 2007 (Brueggeman *et al.* 2007) and 12 in the fall (Brueggeman *et al.* 2008). During the spring and fall of 2007, 129 harbor porpoises were reported between Granite Point and the Susitna River; however, the reason for the increase in numbers of harbor porpoise in the upper Cook Inlet remains unclear and the disparity with the result of past sightings suggests that it may be an anomaly. The spike in reported sightings occurred in July, which was followed by sightings of 79 harbor porpoises in August, 78 in September, and 59 in October, 2007. It is important to note that the number of porpoises counted more than once was unknown, which suggests that the actual numbers are likely smaller than those reported. In addition, recent passive acoustic research in Cook Inlet by the Alaska Department of Fish and Game and the National Marine Mammal Laboratory have indicated that harbor porpoises occur in the area more frequently than previously thought, particularly in the West Foreland area in the spring (NMFS 2011); however overall numbers are still unknown at this time.

Pinnipeds

Two species of pinnipeds may be encountered in Cook Inlet: harbor seal and Steller sea lion.

Harbor Seals—Harbor seals inhabit the coastal and estuarine waters of Cook Inlet. In general, harbor seals are more abundant in lower Cook Inlet than in upper Cook Inlet, but they do occur in the upper inlet throughout most of the year (Rugh *et al.* 2005). Harbor seals are non-migratory; their movements are associated with tides, weather, season, food availability, and reproduction. The major haulout sites for harbor seals are located in lower Cook Inlet and their presence in the upper inlet coincides with seasonal runs of prey species. For example, harbor seals are commonly observed along the Susitna River and other tributaries along upper Cook Inlet during the eulachon and salmon migrations (NMFS 2003). During aerial surveys of upper Cook Inlet in 2001, 2002, and 2003, harbor seals were observed 24 to 96 km south-southwest of Anchorage at the Chickaloon, Little Susitna, Susitna, Ivan, McArthur, and

Beluga Rivers (Rugh *et al.,* 2005). During the 2D test program in March 2011, two harbor seals were observed by vessel-based PSOs. On March 25, 2011, one harbor seal was observed approximately 400 m from the *M/V Miss Diane.* At the time of the observation, the vessel was operating the positioning pinger and PSOs instructed the operator to implement a shut-down. The pinger was shut down for 30 minutes while PSO monitored the area and re-started the device when the animal was not sighted again during the 30 minute site clearing protocol. No unusual behaviors were reported during the time the animal was observed. The second harbor seal was observed on March 26, 2011, by vessel-based PSO onboard the *M/V Dreamcatcher* approximately 4260 m from the source vessel, which was operating the 10 in^3 air gun at the time. The animal was well outside of the 160 dB zone (330 m for the 10 in^3 air gun) and no unusual behaviors were observed. Many harbor seals were observed during the 3D seismic survey conducted under the April 2012 IHA, especially when survey operations were conducted close to shore. NMFS and Apache do not anticipate encountering large haulouts of seals in Area 2—the closest haulout site to the action area is located on Kalgin Island, which is approximately 22 km away from the McArthur River—but we do expect to see curious individual harbor seals; especially during large fish runs in the various rivers draining into Cook Inlet.

Steller Sea Lion—Two separate stocks of Steller sea lions are recognized within U.S. waters: an eastern U.S. stock, which includes animals east of Cape Suckling, Alaska; and a western U.S. stock, which includes animals west of Cape Suckling (NMFS 2008). Individuals in Cook Inlet are considered part of the western U.S. stock, which is listed as endangered under the ESA. Steller sea lions primarily occur in lower, rather than upper Cook Inlet and are rarely sighted north of Nikiski on the Kenai Peninsula. Haul-outs and rookeries are located near Cook Inlet at Gore Point, Elizabeth Island, Perl Island, and Chugach Island (NMFS 2008). No Steller seal lion haul-outs or rookeries are located in the vicinity of the proposed seismic survey. Furthermore, no sightings of Steller sea lions were reported by Apache during the 2D test program in March 2011. During the 3D seismic survey, one Steller sea lion was observed from the *M/V Dreamcatcher* on August 18, 2012, during a period when the air guns were not active. Although Apache has requested takes of Steller sea lions, Steller sea lions would be rare in the action area during seismic survey operations.

Apache's application contains information on the status, distribution, seasonal distribution, and abundance of each of the species under NMFS jurisdiction mentioned in this document. Please refer to the application for that information (see **ADDRESSES**). Additional information can also be found in the NMFS Stock Assessment Reports (SAR). The Alaska 2011 SAR is available at: *http://www.nmfs.noaa.gov/pr/pdfs/sars/ak2011.pdf.*

Potential Effects of the Specified Activity on Marine Mammals

Operating active acoustic sources, such as air gun arrays, has the potential for adverse effects on marine mammals.

Potential Effects of Air Gun Sounds on Marine Mammals

The effects of sounds from air gun pulses might include one or more of the following: tolerance, masking of natural sounds, behavioral disturbance, and temporary or permanent hearing impairment or non-auditory effects (Richardson *et al.* 1995). As outlined in previous NMFS documents, the effects of noise on marine mammals are highly variable, often depending on species and contextual factors, and can be categorized as follows (based on Richardson *et al.* 1995):

(1) Tolerance

Numerous studies have shown that pulsed sounds from air guns are often readily detectable in the water at distances of many kilometers. Numerous studies have also shown that marine mammals at distances more than a few kilometers from operating survey vessels often show no apparent response. That is often true even in cases when the pulsed sounds must be readily audible to the animals based on measured received levels and the hearing sensitivity of that mammal group. In general, pinnipeds and small odotocetes (toothed whales) seem to be more tolerant of exposure to air gun pulses than baleen whales. Although various toothed whales, and (less frequently) pinnipeds have been shown to react behaviorally to air gun pulses under some conditions, at other times, mammals of both types have shown no overt reactions. For example, the available evidence also indicates that Cook Inlet beluga whales are less impacted behaviorally by anthropogenic sounds compared to marine mammals in more pristine acoustic environments (e.g., the Beaufort Sea) given the Cook Inlet population's greater experience with anthropogenic sounds.

(2) Behavioral Disturbance

Marine mammals may behaviorally react to sound when exposed to anthropogenic noise. These behavioral reactions are often shown as: Changing durations of surfacing and dives, number of blows per surfacing, or moving direction and/or speed; reduced/increased vocal activities; changing/cessation of certain behavioral activities (such as socializing or feeding); visible startle response or aggressive behavior (such as tail/fluke slapping or jaw clapping); avoidance of areas where noise sources are located; and/or flight responses (e.g., pinnipeds flushing into water from haulouts or rookeries).

The biological significance of many of these behavioral disturbances is difficult to predict, especially if the detected disturbances appear minor. However, the consequences of behavioral modification have the potential to be biologically significant if the change affects growth, survival, or reproduction. Examples of significant behavioral modifications include:

- Drastic change in diving/surfacing patterns (such as those thought to be causing beaked whale stranding due to exposure to military mid-frequency tactical sonar);
- Habitat abandonment due to loss of desirable acoustic environment; and
- Cessation of feeding or social interaction.

The onset of behavioral disturbance from anthropogenic noise depends on both external factors (characteristics of noise sources and their paths) and the receiving animals (hearing, motivation, experience, demography) and is also difficult to predict (Southall *et al.* 2007).

Currently NMFS uses a received level of 160 dB re 1 μPa to estimate the onset threshold for marine mammal behavioral harassment for impulse noises (such as air gun pulses). As explained below, NMFS has determined that use of this threshold is appropriate for Apache's IHA considering the scientific literature pertaining to this issue and the evidence specific to the marine mammal species and populations in question.

(3) Masking

Marine mammals use acoustic signals for a variety of purposes, which differ among species, but include communication between individuals, navigation, foraging, reproduction, and learning about their environment (Erbe and Farmer, 2000; Tyack, 2000). Masking, or auditory interference,

generally occurs when sounds in the environment are louder than, and of a similar frequency as, auditory signals an animal is trying to receive. Masking is a phenomenon that affects animals that are trying to receive acoustic information about their environment, including sounds from other members of their species, predators, prey, and sounds that allow them to orient in their environment. Masking these acoustic signals can disturb the behavior of individual animals, groups of animals, or entire populations.

Masking occurs when noise and signals (that the animal utilizes) overlap at both spectral and temporal scales. For the air gun noise generated from the proposed seismic surveys, noise will consist of low frequency (under 500 Hz) pulses with extremely short durations (less than one second). Lower frequency man-made noises are more likely to affect detection of communication calls and other potentially important natural sounds such as surf and prey noise. There is little concern regarding masking near the noise source due to the brief duration of these pulses and relatively longer silence between air gun shots (approximately 12 seconds). However, at long distances (over tens of kilometers away), due to multipath propagation and reverberation, the durations of air gun pulses can be ''stretched'' to seconds with long decays (Madsen *et al.* 2006), although the intensity of the noise is greatly reduced.

This could affect communication signals used by low frequency mysticetes when they occur near the noise band and thus reduce the communication space of animals (e.g., Clark *et al.* 2009) and cause increased stress levels (e.g., Foote *et al.* 2004; Holt *et al.* 2009); however, no baleen whales are expected to occur within the action area. Marine mammals are thought to be able to compensate for masking by adjusting their acoustic behavior by shifting call frequencies, and/or increasing call volume and vocalization rates. For example, blue whales are found to increase call rates when exposed to seismic survey noise in the St. Lawrence Estuary (Di Iorio and Clark 2010). The North Atlantic right whales (*Eubalaena glacialis*) exposed to high shipping noise increase call frequency (Parks *et al.* 2007), while some humpback whales respond to low-frequency active sonar playbacks by increasing song length (Miller *el al.* 2000).

(4) Hearing Impairment

Marine mammals exposed to high intensity sound repeatedly or for prolonged periods can experience hearing threshold shift (TS), which is the loss of hearing sensitivity at certain frequency ranges (Kastak *et al.* 1999; Schlundt *et al.* 2000; Finneran *et al.* 2002; 2005). TS can be permanent (PTS), in which case the loss of hearing sensitivity is unrecoverable, or temporary (TTS), in which case the animal's hearing threshold will recover over time (Southall *et al.* 2007). Just like masking, marine mammals that suffer from PTS or TTS could have reduced fitness in survival and reproduction, either permanently or temporarily. Repeated noise exposure that leads to TTS could cause PTS. For transient sounds, the sound level necessary to cause TTS is inversely related to the duration of the sound.

Researchers have studied TTS in certain captive odontocetes and pinnipeds exposed to strong sounds (reviewed in Southall *et al.,* 2007). However, there has been no specific documentation of TTS let alone permanent hearing damage, i.e., permanent threshold shift (PTS), in free-ranging marine mammals exposed to sequences of airgun pulses during realistic field conditions.

Temporary Threshold Shift—TTS is the mildest form of hearing impairment that can occur during exposure to a strong sound (Kryter, 1985). While experiencing TTS, the hearing threshold rises and a sound must be stronger in order to be heard. At least in terrestrial mammals, TTS can last from minutes or hours to (in cases of strong TTS) days. For sound exposures at or somewhat above the TTS threshold, hearing sensitivity in both terrestrial and marine mammals recovers rapidly after exposure to the noise ends. Few data on sound levels and durations necessary to elicit mild TTS have been obtained for marine mammals, and none of the published data concern TTS elicited by exposure to multiple pulses of sound. Available data on TTS in marine mammals are summarized in Southall *et al.* (2007).

To avoid the potential for injury, NMFS (1995, 2000) concluded that cetaceans and pinnipeds should not be exposed to pulsed underwater noise at received levels exceeding 180 and 190 dB re 1 μPa (rms), respectively. The 180 and 190 dB (rms) criteria are not considered to be the levels above which TTS might occur. Rather, they are the received levels above which, in the view of a panel of bioacoustics specialists convened by NMFS before TTS measurements for marine mammals started to become available, one could not be certain that there would be no injurious effects, auditory or otherwise, to marine mammals. NMFS also assumes that cetaceans and pinnipeds exposed to levels exceeding 160 dB re 1 μPa (rms) may experience Level B harassment.

For toothed whales, researchers have derived TTS information for odontocetes from studies on the bottlenose dolphin and beluga. The experiments show that exposure to a single impulse at a received level of 207 kPa (or 30 psi, p-p), which is equivalent to 228 dB re 1 Pa (p-p), resulted in a 7 and 6 dB TTS in the beluga whale at 0.4 and 30 kHz, respectively. Thresholds returned to within 2 dB of the pre-exposure level within 4 minutes of the exposure (Finneran *et al.,* 2002). For the one harbor porpoise tested, the received level of airgun sound that elicited onset of TTS was lower (Lucke *et al.,* 2009). If these results from a single animal are representative, it is inappropriate to assume that onset of TTS occurs at similar received levels in all odontocetes (*cf.* Southall *et al.,* 2007). Some cetaceans apparently can incur TTS at considerably lower sound exposures than are necessary to elicit TTS in the beluga or bottlenose dolphin.

In pinnipeds, researchers have not measured TTS thresholds associated with exposure to brief pulses (single or multiple) of underwater sound. Initial evidence from more prolonged (non-pulse) exposures suggested that some pinnipeds (harbor seals in particular) incur TTS at somewhat lower received levels than do small odontocetes exposed for similar durations (Kastak *et al.,* 1999, 2005; Ketten *et al.,* 2001). The TTS threshold for pulsed sounds has been indirectly estimated as being an SEL of approximately 171 dB re 1 $\mu Pa^2 \cdot s$ (Southall *et al.,* 2007) which would be equivalent to a single pulse with a received level of approximately 181 to 186 dB re 1 μPa (rms), or a series of pulses for which the highest rms values are a few dB lower. Corresponding values for California sea lions and northern elephant seals are likely to be higher (Kastak *et al.,* 2005).

No cases of TTS are expected as a result of Apache's proposed activities given the strong likelihood that marine mammals would avoid the approaching air guns (or vessel) before being exposed to levels high enough for there to be any possibility of TTS, and the mitigation measures proposed to be implemented during the survey described later in this document.

Permanent Threshold Shift—When PTS occurs, there is physical damage to the sound receptors in the ear. In severe cases, there can be total or partial deafness, whereas in other cases, the animal has an impaired ability to hear sounds in specific frequency ranges

(Kryter, 1985). There is no specific evidence that exposure to pulses of airgun sound can cause PTS in any marine mammal, even with large arrays of airguns. However, given the possibility that mammals close to an airgun array might incur at least mild TTS, there has been further speculation about the possibility that some individuals occurring very close to airguns might incur PTS (e.g., Richardson *et al.,* 1995; Gedamke *et al.,* 2008). Single or occasional occurrences of mild TTS are not indicative of permanent auditory damage, but repeated or (in some cases) single exposures to a level well above that causing TTS onset might elicit PTS.

Relationships between TTS and PTS thresholds have not been studied in marine mammals, but are assumed to be similar to those in humans and other terrestrial mammals (Southall *et al.,* 2007). PTS might occur at a received sound level at least several dBs above that inducing mild TTS if the animal were exposed to strong sound pulses with rapid rise times. Based on data from terrestrial mammals, a precautionary assumption is that the PTS threshold for impulse sounds (such as airgun pulses as received close to the source) is at least 6 dB higher than the TTS threshold on a peak-pressure basis, and probably greater than 6 dB (Southall *et al.,* 2007).

Given the higher level of sound necessary to cause PTS as compared with TTS, it is considerably less likely that PTS would occur during the proposed seismic survey in Cook Inlet. Cetaceans generally avoid the immediate area around operating seismic vessels, as do some other marine mammals. Some pinnipeds show avoidance reactions to airguns, but their avoidance reactions are generally not as strong or consistent as those of cetaceans, and occasionally they seem to be attracted to operating seismic vessels (NMFS, 2010).

(5) Non-Auditory Physical Effects

Non-auditory physical effects might occur in marine mammals exposed to strong underwater pulsed sound. Possible types of non-auditory physiological effects or injuries that theoretically might occur in mammals close to a strong sound source include stress, neurological effects, bubble formation, and other types of organ or tissue damage. Some marine mammal species (i.e., beaked whales) may be especially susceptible to injury and/or stranding when exposed to strong pulsed sounds. However, there is no definitive evidence that any of these effects occur even for marine mammals in close proximity to large arrays of air guns, and beaked whales do not occur in the proposed project area. In addition, marine mammals that show behavioral avoidance of seismic vessels, including most baleen whales, some odontocetes (including belugas), and some pinnipeds, are especially unlikely to incur non-auditory impairment or other physical effects. The distances to the 180 and 190 dB thresholds for the air gun array proposed to be used by Apache are provided above in Tables 1 and 2.

Therefore, it is unlikely that such effects would occur during Apache's proposed surveys given the brief duration of exposure and the planned monitoring and mitigation measures described later in this document.

(6) Stranding and Mortality

Marine mammals close to underwater detonations of high explosive can be killed or severely injured, and the auditory organs are especially susceptible to injury (Ketten *et al.* 1993; Ketten 1995). Air gun pulses are less energetic and their peak amplitudes have slower rise times. To date, there is no evidence that serious injury, death, or stranding by marine mammals can occur from exposure to air gun pulses, even in the case of large air gun arrays.

However, in numerous past IHA notices for seismic surveys, commenters have referenced two stranding events allegedly associated with seismic activities, one off Baja California and a second off Brazil. NMFS has addressed this concern several times, including in the **Federal Register** notice announcing the IHA for Apache's first seismic survey in 2012, and, without new information, does not believe that this issue warrants further discussion. For information relevant to strandings of marine mammals, readers are encouraged to review NMFS' response to comments on this matter found in 69 FR 74905 (December 14, 2004), 71 FR 43112 (July 31, 2006), 71 FR 50027 (August 24, 2006), 71 FR 49418 (August 23, 2006), and 77 FR 27720 (May 11, 2012).

It should be noted that strandings related to sound exposure have not been recorded for marine mammal species in Cook Inlet. Beluga whale strandings in Cook Inlet are not uncommon; however, these events often coincide with extreme tidal fluctuations (''spring tides'') or killer whale sightings (Shelden *et al.,* 2003). For example, in August 2012, a group of Cook Inlet beluga whales stranded in the mud flats of Turnagain Arm during low tide and were able to swim free with the flood tide. No strandings or marine mammals in distress were observed during the 2D test survey conducted by Apache in March 2011 and none were reported by Cook Inlet inhabitants. Furthermore, no strandings were reported during seismic survey operations conducted under the April 2012 IHA. As a result, NMFS does not expect any marine mammals will incur serious injury or mortality in Cook Inlet or strand as a result of the proposed seismic survey.

Potential Effects From Pingers on Marine Mammals

Active acoustic sources other than the airguns have been proposed for Apache's 2013 seismic survey in Cook Inlet. The specifications for the pingers (source levels and frequency ranges) were provided earlier in this document. In general, the potential effects of this equipment on marine mammals are similar to those from the airguns, except the magnitude of the impacts is expected to be much less due to the lower intensity of the source.

Potential Effects From Vessels and Vessel Noise on Marine Mammals

Vessel activity and noise associated with vessel activity will temporarily increase in the action area during Apache's seismic survey as a result of the operation of eight vessels. To minimize the effects of vessels and noise associated with vessel activity, Apache will follow NMFS' Marine Mammal Viewing Guidelines and Regulations and will alter heading or speed if a marine mammal gets too close to a vessel. In addition, vessels will be operating at slow speed (2–4 knots) when conducting surveys and in a purposeful manner to and from work sites in as direct a route as possible. Marine mammal monitoring observers and passive acoustic devices will alert vessel captains as animals are detected to ensure safe and effective measures are applied to avoid coming into direct contact with marine mammals. Therefore, NMFS neither anticipates nor authorizes takes of marine mammals from ship strikes.

Odontocetes, such as beluga whales, killer whales, and harbor porpoises, often show tolerance to vessel activity; however, they may react at long distances if they are confined by ice, shallow water, or were previously harassed by vessels (Richardson, 1995). Beluga whale response to vessel noise varies greatly from tolerance to extreme sensitivity depending on the activity of the whale and previous experience with vessels (Richardson, 1995). Reactions to vessels depends on whale activities and experience, habitat, boat type, and boat behavior (Richardson, 1995) and may

include behavioral responses, such as altered headings or avoidance (Blane and Jaakson, 1994; Erbe and Farmer, 2000); fast swimming; changes in vocalizations (Lesage *et al.,* 1999; Scheifele *et al.,* 2005); and changes in dive, surfacing, and respiration patterns.

There are few data published on pinniped responses to vessel activity, and most of the information is anecdotal (Richardson, 1995). Generally, sea lions in water show tolerance to close and frequently approaching vessels and sometimes show interest in fishing vessels. They are less tolerant when hauled out on land; however, they rarely react unless the vessel approaches within 100–200 m (330–660 ft; reviewed in Richardson, 1995).

The addition of eight vessels and noise due to vessel operations associated with the seismic survey would not be outside the present experience of marine mammals in Cook Inlet, although levels may increase locally. Given the large number of vessels in Cook Inlet and the apparent habituation to vessels by Cook Inlet beluga whales and the other marine mammals that may occur in the area, vessel activity and noise is not expected to have effects that could cause significant or long-term consequences for individual marine mammals or their populations.

Potential Effects From Aircraft Noise on Marine Mammals

Apache plans to utilize the crew helicopter to conduct aerial surveys near river mouths in order to identify locations or congregations of beluga whales and other marine mammals prior to the commencement of operations. The helicopter will not be used every day, but will be used for surveys near river mouths. Aerial surveys will fly at an altitude of 305 m (1,000 ft) when practicable and weather conditions permit. In the event of a marine mammal sighting, aircraft will try to maintain a radial distance of 457 m (1,500 ft) from the marine mammal(s). Aircraft will avoid approaching marine mammals from head-on, flying over or passing the shadow of the aircraft over the marine mammals.

Studies on the reactions of cetaceans to aircraft show little negative response (Richardson *et al.,* 1995). In general, reactions range from sudden dives and turns and are typically found to decrease if the animals are engaged in feeding or social behavior. Whales with calves or in confined waters may show more of a response. Generally there has been little or no evidence of marine mammals responding to aircraft overflights when altitudes are at or above 1,000 ft, based on three decades of flying experience in the Arctic (NMFS, unpublished data). Based on long-term studies that have been conducted on beluga whales in Cook Inlet since 1993, NMFS expect that there will be no effects of this activity on beluga whales or other cetaceans. No change in beluga swim directions or other noticeable reactions have been observed during the Cook Inlet aerial surveys flown from 600 to 800 ft. (e.g., Rugh *et al.,* 2000). By applying the operational requirements discussed above, sound levels underwater are not expected to reach NMFS' harassment thresholds.

The majority of observations of pinnipeds reacting to aircraft noise are associated with animals hauled out on land or ice. There are very little data describing the reactions of pinnipeds in water to aircraft (Richardson *et al.,* 1995). In the presence of aircraft, pinnipeds hauled out for pupping or molting generally became alert and then rushed or slipped (when on ice) into the water. Stampedes often result from this response and may increase pup mortality due to crushing or an increase rate of pup abandonment. The greatest reactions from hauled out pinnipeds were observed when low flying aircrafts passed directly above the animal(s) (Richardson *et al.,* 1995). Although noise associated with aircraft activity could cause hauled out pinnipeds to rush into the water, there are no known haul out sites in the vicinity of the survey site.

Therefore, the operation of aircraft during the seismic survey is not expected to have effects that could cause significant or long-term consequences for individual marine mammals or their populations. To minimize the noise generated by aircraft, Apache will follow NMFS' Marine Mammal Viewing Guidelines and Regulations found at *http://www.alaskafisheries.noaa.gov/protectedresources/mmv/guide.htm.*

Land-Based Explosives

The onshore component of the seismic survey involves the underground detonation of explosive devices to acquire seismic data on land. Because underwater sound levels associated with the land-based explosives were previously unknown, in September 2011, Apache conducted a SSV study, which found that marine mammals would not be exposed to underwater sound levels that exceed the NMFS injury or harassment thresholds.

Anticipated Effects on Marine Mammal Habitat

The primary potential impacts to marine mammal habitat and other marine species are associated with elevated sound levels produced by airguns and other active acoustic sources. However, other potential impacts to the surrounding habitat from physical disturbance are also possible and are discussed below.

Potential Impacts on Prey Species

With regard to fish as a prey source for cetaceans and pinnipeds, fish are known to hear and react to sounds and to use sound to communicate (Tavolga *et al.,* 1981) and possibly avoid predators (Wilson and Dill, 2002). Experiments have shown that fish can sense both the strength and direction of sound (Hawkins, 1981). Primary factors determining whether a fish can sense a sound signal, and potentially react to it, are the frequency of the signal and the strength of the signal in relation to the natural background noise level.

The level of sound at which a fish will react or alter its behavior is usually well above the detection level. Fish have been found to react to sounds when the sound level increased to about 20 dB above the detection level of 120 dB (Ona, 1988); however, the response threshold can depend on the time of year and the fish's physiological condition (Engas *et al.,* 1993). In general, fish react more strongly to pulses of sound rather than a continuous signal (Blaxter *et al.,* 1981), and a quicker alarm response is elicited when the sound signal intensity rises rapidly compared to sound rising more slowly to the same level.

Investigations of fish behavior in relation to vessel noise (Olsen *et al.,* 1983; Ona, 1988; Ona and Godo, 1990) have shown that fish react when the sound from the engines and propeller exceeds a certain level. Avoidance reactions have been observed in fish such as cod and herring when vessels approached close enough that received sound levels are 110 dB to 130 dB (Nakken, 1992; Olsen, 1979; Ona and Godo, 1990; Ona and Toresen, 1988). However, other researchers have found that fish such as polar cod, herring, and capeline are often attracted to vessels (apparently by the noise) and swim toward the vessel (Rostad *et al.,* 2006). Typical sound source levels of vessel noise in the audible range for fish are 150 dB to 170 dB (Richardson *et al.,* 1995).

Potential Impacts to the Benthic Environment

Apache's seismic survey requires the deployment of a submersible recording system in the inter-tidal and marine zones. An autonomous ''nodal'' (i.e., no cables) system would be placed on the seafloor by specific vessels in lines parallel to each other with a node line spacing of 402 m. Each nodal ''patch'' would have six to eight node lines parallel to each other. The lines generally run perpendicular to the shoreline. An entire patch would be placed on the seafloor prior to air gun activity. As the patches are surveyed, the node lines would be moved either side to side or inline to the next location. Placement and retrieval of the nodes may cause temporary and localized increases in turbidity on the seafloor. The substrate of Cook Inlet consists of glacial silt, clay, cobbles, pebbles, and sand (Sharma and Burrell, 1970). Sediments like sand and cobble dissipate quickly when suspended, but finer materials like clay and silt can create thicker plumes that may harm fish; however, the turbidity created by placing and removing nodes on the seafloor would settle to background levels within minutes after the cessation of activity.

In addition, seismic noise will radiate throughout the water column from air guns and pingers until is dissipates to background levels. No studies have demonstrated that seismic noise affects the life stages, condition, or amount of food resources (fish, invertebrates, eggs) used by marine mammals, except when exposed to sound levels within a few meters of the seismic source or in few very isolated cases. Where fish or invertebrates did respond to seismic noise, the effects were temporary and of short duration. Consequently, disturbance to fish species due to the activities associated with the seismic survey (i.e, placement and retrieval of nodes and noise from sound sources) would be short term and fish would be expected to return to their pre-disturbance behavior once seismic survey activities cease.

Based on the preceding discussion, the proposed activity is not expected to have any habitat-related effects that could cause significant or long-term consequences for individual marine mammals or their populations.

Proposed Mitigation

In order to issue an incidental take authorization under section 101(a)(5)(D) of the MMPA, NMFS must set forth the permissible methods of taking pursuant to such activity, and other means of effecting the least practicable adverse impact on such species or stock and its habitat, paying particular attention to rookeries, mating grounds, and areas of similar significance, and on the availability of such species or stock for taking for certain subsistence uses.

For the proposed seismic survey in Cook Inlet, Apache worked with NMFS and proposed the following mitigation measures to minimize the potential impacts to marine mammals in the project vicinity as a result of the survey activities.

Mitigation Measures Proposed in Apache's IHA Application

For the proposed mitigation measures, Apache listed the following protocols to be implemented during its seismic survey in Cook Inlet.

(1) Operation of Mitigation Air Gun at Night

Apache proposes to conduct both daytime and nighttime operations. Nighttime operations would only be initiated if a mitigation air gun (typically the 10 in^3) has been continuously operational from the time that PSO monitoring has ceased for the day. The mitigation airgun would operate on a longer duty cycle than the full airgun arrays, firing every 30–45 seconds. Seismic activity would not ramp up from an extended shut-down (i.e., when the airgun has been down with no activity for at least 10 minutes) during nighttime operations and survey activities would be suspended until the following day because dedicated PSOs would not be on duty and any unseen animals may be exposed to injurious levels of sound from the full array. At night, the vessel captain and crew would maintain lookout for marine mammals and would order the airgun(s) to be shut down if marine mammals are observed in or about to enter the established safety radii.

(2) Safety and Disturbance Zones

NMFS mitigation or shutdown ''safety radii'' for limiting marine mammal exposure to impulse sources typically correspond to the distances within which received sound levels are ≥180 dB_{rms} re 1 μPa for cetaceans and ≥190 dB_{rms} re 1 μPa for pinnipeds. These safety criteria are based on an assumption that SPLs received at levels lower than these will not injure these animals or impair their hearing abilities. Disturbance or behavioral effects to marine mammals from underwater sound may occur from exposure to sound at lower SPLs, at distances greater than the safety radii (Richardson *et al.,* 1995). The disturbance zone is defined as the area between the 180/190 dB threshold and the 160 dB threshold where NMFS has determined that harassment in the form of behavioral disturbance may occur.

The proposed survey would use airgun sources composed of two 2400 in^3 airguns, a single 440 in^3 airgun, and a single 10 in^3 airgun. Safety and disturbance radii for the sound levels produced by the planned airgun configurations and pinger have been estimated (see Table 4) and would be used for mitigation purposes during the seismic survey activities.

TABLE 4—ESTIMATED DISTANCES TO SOUND THRESHOLDS

Source	190 dB	180 dB	160 dB
Pinger	1 m	3 m	25 m
10 cui Airgun	10 m	33 m	330 m
440 cui Airgun	NA	NA	NA
2,400 cui airgun (nearshore)	0.51 km	1.42 km	6.41 km
2,400 cui airgun (offshore)	1.18 km	0.98 km	4.89 km

In addition to the marine mammal monitoring radii described above, pursuant to Alaska Department of Fish and Game restrictions, there would be a 1.6 km setback of sound source points from the mouths of any anadromous streams.

Apache also plans to use dedicated vessels to deploy and retrieve the nodal recording system. Sounds produced by the vessels are not expected to exceed 180 dB (rms). Therefore, mitigation related to acoustic impacts from these activities is not expected to be necessary.

(3) Speed and Course Alterations

If a marine mammal is detected outside the applicable safety radius and, based on its position and the relative motion, is likely to enter the safety radius, changes of the vessel's speed and/or direct course would be considered if this does not compromise operational safety. For marine seismic surveys using large arrays, course alterations are not typically possible. However, for the smaller air gun arrays planned during the proposed site surveys, such changes may be possible. After any such speed and/or course alteration is begun, the marine mammal activities and movements relative to the survey vessel would be closely monitored to ensure that the marine mammal does not approach within the safety radius. If the mammal appears likely to enter the safety radius, further mitigative actions would be taken, including a power down or shut down of the airgun(s).

(4) Power-Downs

A power-down for mitigation purposes is the immediate reduction in the number of operating airguns such that the radii of the 190 dB rms and 180 dB rms zones are decreased to the extent that an observed marine mammal(s) are not in the applicable safety zone of the full array. During a power-down, one air gun, typically the 10 in^3, continues firing. Operation of the 10 in^3 air gun decreases the safety radii to 10 m, 33 m, and 330 m for the 190 dB, 180 dB, and 160 dB, respectively. The continued operation of one airgun is intended to (a) alert marine mammals to the presence of the survey vessel in the area, and (b) retain the option of initiating a ramp up to full operations under poor visibility conditions.

The array would be immediately powered down whenever a marine mammal is sighted approaching close to or within the applicable safety zone of the full array, but is outside the applicable safety zone of the single mitigation airgun. Likewise, if a mammal is already within the safety zone when first detected, the airguns would be powered down immediately. If a marine mammal is sighted within or about to enter the applicable safety zone of the single mitigation airgun, it too would be shut down (see following section).

Following a power-down, operation of the full airgun array would not resume until the marine mammal has cleared the safety zone. The animal would be considered to have cleared the safety zone if it:

- Is visually observed to have left the safety zone of the full array, or
- Has not been seen within the zone for 15 min in the case of pinnipeds or small odontocetes, or
- Has not been seen within the zone for 30 min in the case of large odontocetes.

(5) Shut-Downs

The operating airgun(s) would be shut down completely if a marine mammal approaches or enters the safety radius and a power-down is not practical or adequate to reduce exposure to less than 190 or 180 dB rms, as appropriate. In most cases, this means the mitigation airgun would be shut down completely if a marine mammal approaches or enters the estimated safety radius around the single 10 in^3 air gun while it is operating during a power dow090Airgun activity would not resume until the marine mammal has cleared the safety radius. The animal would be considered to have cleared the safety radius as described above under power down procedures.

(6) Ramp-Ups

A ramp-up of an airgun array provides a gradual increase in sound levels, and involves a step-wise increase in the number and total volume of air guns firing until the full volume is achieved. The purpose of a ramp-up (or ''soft start'') is to ''warn'' cetaceans and pinnipeds in the vicinity of the airguns and to provide the time for them to leave the area and thus avoid any potential injury or impairment of their hearing abilities.

During the proposed seismic survey, the seismic operator will ramp up the airgun array slowly. NMFS requires the rate of ramp-up to be no more than 6 dB per 5-minute period. Ramp-up is used at the start of airgun operations, after a power- or shut-down, and after any period of greater than 10 minutes in duration without airgun operations (i.e., extended shutdown).

A full ramp-up after a shut down will not begin until there has been a minimum of 30 minutes of observation of the safety zone by PSOs to assure that no marine mammals are present. The entire safety zone must be visible during the 30-minute lead-in to a full ramp up. If the entire safety zone is not visible, then ramp-up from a cold start cannot begin. If a marine mammal(s) is sighted within the safety zone during the 30-minute watch prior to ramp-up, ramp-up will be delayed until the marine mammal(s) is sighted outside of the safety zone or the animal(s) is not sighted for at least 15–30 minutes: 15 minutes for small odontocetes and pinnipeds (e.g. harbor porpoises, harbor seals, and Steller sea lions), or 30 minutes for large odontocetes (e.g., killer whales and beluga whales).

(7) Shut-Downs for Aggregations of Whales and Beluga Cow-Calf Pairs

The following additional protective measures beluga whale cow-calf pairs and aggregations of whales are proposed. Specifically, a 160-dB vessel monitoring zone would be established and monitored in Cook Inlet during all seismic surveys. Whenever an aggregation of beluga whales or killer whales (five or more whales of any age/sex class that appear to be engaged in a non-migratory, significant biological behavior (e.g., feeding, socializing)), or beluga whale cow-calf pairs are observed approaching the 160-dB safety zone around the survey operations, the survey activity would not commence or would shut down, until they are no longer present within the 160-dB safety zone of seismic surveying operations.

Additional Mitigation Measures Proposed by NMFS

Furthermore, NMFS proposes the following measures be included in the IHA, if issued:

(1) All vessels should reduce speed when within 300 yards (274 m) of whales, and those vessels capable of steering around such groups should do so. Vessels may not be operated in such a way as to separate members of a group of whales from other members of the group;

(2) Avoid multiple changes in direction and speed when within 300 yards (274 m) of whales; and

(3) When weather conditions require, such as when visibility drops, support vessels must adjust speed (increase or decrease) and direction accordingly to avoid the likelihood of injury to whales.

Mitigation Measures Considered But Not Proposed

NMFS considered whether time/area restrictions were warranted. NMFS has preliminary determined that such restrictions are not necessary or practicable here. Beluga whales remain in Cook Inlet year-round, but demonstrate seasonal movement within the Inlet; in the summer and fall, they concentrate in upper Cook Inlet's rivers and bays, but tend to disperse offshore and move to mid-Inlet in winter (Hobbs *et al.,* 2005). The available information indicates that in the winter months belugas are dispersed in deeper waters in mid-Inlet past Kalgin Island, with occasional forays into the upper inlet, including the upper ends of Knik and Turnagain Arms. Their winter

distribution does not appear to be associated with river mouths, as it is during the warmer months. The spatial dispersal and diversity of winter prey are likely to influence the wider beluga winter range throughout the mid-Inlet. Apache now expects to mobilize crews and equipment for its seismic survey in January 2013, which would coincide with the time of year when belugas are dispersed offshore in the mid-Inlet and away from river mouths. In the spring, beluga whales are regularly sighted in the upper Inlet beginning in late April or early May, coinciding with eulachon runs in the Susitna River and Twenty Mile River in Turnagain Arm, and well outside of the area where Apache will be conducting seismic surveys. Therefore, NMFS believes that the timing and location of the seismic survey, as proposed, will avoid areas and seasons that overlap with important beluga whale behavioral patterns.

NMFS also considered whether to require time area restrictions for areas identified as home ranges during August through March for 14 satellite-tracked beluga whales in Hobbs *et al.,* 2005. NMFS has preliminarily determined not to require time/area restrictions for these areas within the phase 2 survey area. The areas in question within phase 2 are relatively large areas in which belugas are dispersed. In addition, data for 14 tracked belugas does not establish that belugas will not appear in other areas—particularly during the periods of the year when belugas are more dispersed in Cook Inlet. Time/area restrictions for these areas thus would not yield a material benefit for the species. Such restrictions also are not practicable given the applicant's need to survey the areas in question and the need for operational flexibility given weather conditions, real-time adjustment of operations to avoid marine mammals and other factors.

Mitigation Conclusions

NMFS has carefully evaluated the applicant's proposed mitigation measures and considered a range of other measures in the context of ensuring that NMFS prescribes the means of effecting the least practicable impact on the affected marine mammal species and stocks and their habitat. Our evaluation of potential measures included consideration of the following factors in relation to one another:

- The manner in which, and the degree to which, the successful implementation of the measure is expected to minimize adverse impacts to marine mammals;
- The proven or likely efficacy of the specific measure to minimize adverse impacts as planned; and
- The practicability of the measure for applicant implementation.

Based on our evaluation of the applicant's proposed measures, as well as other measures considered, NMFS has preliminarily determined that the proposed mitigation measures provide the means of effecting the least practicable impact on marine mammal species or stocks and their habitat, paying particular attention to rookeries, mating grounds, and areas of similar significance.

Proposed Monitoring and Reporting

In order to issue an ITA for an activity, section 101(a)(5)(D) of the MMPA states that NMFS must set forth ''requirements pertaining to the monitoring and reporting of such taking''. The MMPA implementing regulations at 50 CFR 216.104 (a)(13) indicate that requests for ITAs must include the suggested means of accomplishing the necessary monitoring and reporting that will result in increased knowledge of the species and of the level of taking or impacts on populations of marine mammals that are expected to be present in the proposed action area.

Monitoring Measures Proposed in Apache's IHA Application

The monitoring plan proposed by Apache can be found in section 13 of the IHA application. The plan may be modified or supplemented based on comments or new information received from the public during the public comment period. A summary of the primary components of the plan follows.

(1) Visual Vessel-Based Monitoring

Vessel-based monitoring for marine mammals would be done by experienced PSOs throughout the period of marine survey activities. PSOs would monitor the occurrence and behavior of marine mammals near the survey vessel during all daylight periods during operation and during most daylight periods when airgun operations are not occurring. PSO duties would include watching for and identifying marine mammals, recording their numbers, distances, and reactions to the survey operations, and documenting ''take by harassment'' as defined by NMFS.

A sufficient number of PSOs would be required onboard the survey vessel to meet the following criteria: (1) 100 percent monitoring coverage during all periods of survey operations in daylight; (2) maximum of 4 consecutive hours on watch per PSO; and (3) maximum of 12 hours of watch time per day per PSO.

PSO teams would consist of experienced field biologists. An experienced field crew leader would supervise the PSO team onboard the survey vessel. Apache currently plans to have PSOs aboard the three vessels: the two source vessels (*M/V Peregrine Falcon* and *M/V Arctic Wolf*) and one support vessel (*M/V Dreamcatcher*). Two PSOs would be on the source vessels and two PSOs would be on the support vessel to observe the safety, power down, and shut down areas. When marine mammals are about to enter or are sighted within designated safety zones, airgun or pinger operations would be powered down (when applicable) or shut down immediately. The vessel-based observers would watch for marine mammals during all periods when sound sources are in operation and for a minimum of 30 minutes prior to the start of airgun or pinger operations after an extended shut down.

Crew leaders and most other biologists serving as observers would be individuals with experience as observers during seismic surveys in Alaska or other areas in recent years.

The observer(s) would watch for marine mammals from the best available vantage point on the source and support vessels, typically the flying bridge. The observer(s) would scan systematically with the unaided eye and 7×50 reticle binoculars. Laser range finders would be available to assist with estimating distance. Personnel on the bridge would assist the observer(s) in watching for marine mammals.

All observations would be recorded in a standardized format. Data would be entered into a custom database using a notebook computer. The accuracy of the data would be verified by computerized validity data checks as the data are entered and by subsequent manual checks of the database. These procedures would allow for initial summaries of the data to be prepared during and shortly after the completion of the field program, and would facilitate transfer of the data to statistical, geographical, or other programs for future processing and achieving. When a mammal sighting is made, the following information about the sighting would be recorded:

(A) Species, group size, age/size/sex categories (if determinable), behavior when first sighted and after initial sighting, heading (if consistent), bearing and distance from the PSO, apparent reaction to activities (e.g., none, avoidance, approach, paralleling, etc.),

closest point of approach, and behavioral pace;

(B) Time, location, speed, activity of the vessel, sea state, ice cover, visibility, and sun glare; and

(C) The positions of other vessel(s) in the vicinity of the PSO location.

The ship's position, speed of support vessels, and water temperature, water depth, sea state, ice cover, visibility, and sun glare would also be recorded at the start and end of each observation watch, every 30 minutes during a watch, and whenever there is a change in any of those variables.

(2) Visual Shore-Based Monitoring

In addition to the vessel-based PSOs, Apache proposes to utilize a shore-based station to visually monitor for marine mammals. The shore-based station would follow all safety procedures, including bear safety. The location of the shore-based station would need to be sufficiently high to observe marine mammals; the PSOs would be equipped with pedestal mounted ''big eye'' (20x110) binoculars. The shore-based PSOs would scan the area prior to, during, and after the air gun operations, and would be in contact with the vessel-based PSOs via radio to communicate sightings of marine mammals approaching or within the project area.

(3) Aerial-Based Monitoring

When survey operations occur near a river mouth, Apache will utilize the crew helicopter to conduct aerial surveys near river mouths prior to the commencement of airgun operations in order to identify locations where beluga whales congregate. The helicopter may also be used at other times. The helicopter would not be used every day, but will be used when survey operations occur near a river mouth. The types of helicopters currently planned for use by Apache include a Bell 407, Bell UH1B, and ASB3. Weather and scheduling permitting, aerial surveys would fly at an altitude of 305 m (1,000 ft). In the event of a marine mammal sighting, aircraft would attempt to maintain a radial distance of 457 m (1,500 ft) from the marine mammal(s). Aircraft would avoid approaching marine mammals from head-on, flying over or passing the shadow of the aircraft over the marine mammal(s). By following these operational requirements, sound levels underwater are not expected to meet or exceed NMFS harassment thresholds (Richardson *et al.,* 1995; Blackwell *et al.,* 2002).

(4) Acoustic Monitoring

To further enhance detection of cetaceans, Apache proposes to deploy passive acoustic monitoring (PAM) devices during the seismic survey. Apache anticipates utilizing the same system that was deployed under the April 2012 IHA, which involved an over-the-side hydrophone floating from the M/V *Dreamcatcher.* Apache would continue to use this system until a better mooring system for the PAM buoys is developed. The PAM operators would use specialized real-time detection software and audio playback to detect marine mammal sounds. If the PAM operators detect marine mammals, Apache would initiate a temporary shut-down of the airgun arrays to avoid takes. Following a shut-down, the airguns may be restarted in accordance with the ramp-up procedure described earlier.

Based on data collected from Apache during its survey operations conducted under the April 2012 IHA, NMFS believes that the foregoing monitoring measures will allow Apache to identify animals nearing or entering the 160 db zone with a reasonably high degree of accuracy.

Reporting Measures

(1) Field Reports

During the proposed survey program, the PSOs would prepare a report each day or at such other interval as the IHA (if issued), or Apache may require, summarizing the recent results of the monitoring program. The field reports would summarize the species and numbers of marine mammals sighted. These reports would be provided to NMFS and to the survey operators on a weekly basis. At the end of each month, a summary of the weekly reports would be submitted to NMFS.

(2) Technical Report

The results of Apache's 2013 monitoring program, including estimates of ''take'' by harassment (based on presence in the 160 dB harassment zone), would be presented in the ''90-day'' and Final Technical reports. The Technical Report would include:

(a) Summaries of monitoring effort (e.g., total hours, total distances, and marine mammal distribution through the study period, accounting for sea state and other factors affecting visibility and detectability of marine mammals);

(b) Analyses of the effects of various factors influencing detectability of marine mammals (e.g., sea state, number of observers, and fog/glare);

(c) Species composition, occurrence, and distribution of marine mammal sightings, including date, water depth, numbers, age/size/gender categories (if determinable), group sizes, and ice cover;

(d) Analyses of the effects of survey operations;

- Sighting rates of marine mammals during periods with and without seismic survey activities (and other variables that could affect detectability), such as:
- Initial sighting distances versus survey activity state;
- Closest point of approach versus survey activity state;
- Observed behaviors and types of movements versus survey activity state;
- Numbers of sightings/individuals seen versus survey activity state;
- Distribution around the source vessels versus survey activity state; and
- Estimates of take by harassment based on presence in the 160 dB disturbance zone.

(3) Comprehensive Report

Following the survey season, a comprehensive report describing the vessel-based, shore-based, aerial-based, and acoustic monitoring programs would be prepared. The comprehensive report would describe the methods, results, conclusions and limitations of each of the individual data sets in detail. The report would also integrate (to the extent possible) the studies into a broad based assessment of industry activities, and other activities that occur in Cook Inlet, and their impacts on marine mammals. The report would help to establish long-term data sets that can assist with the evaluation of changes in the Cook Inlet ecosystem. The report would attempt to provide a regional synthesis of available data on industry activity in this part of Alaska that may influence marine mammal density, distribution and behavior.

(4) Notification of Injured or Dead Marine Mammals

In the unanticipated event that the specified activity clearly causes the take of a marine mammal in a manner prohibited by the IHA (if issued), such as an injury (Level A harassment), serious injury or mortality (e.g., ship-strike, gear interaction, and/or entanglement), Apache would immediately cease the specified activities and immediately report the incident to the Chief of the Permits and Conservation Division, Office of Protected Resources, NMFS, and the Alaska Regional Stranding Coordinators. The report would include the following information:

- Time, date, and location (latitude/longitude) of the incident;
- Name and type of vessel involved;
- Vessel's speed during and leading up to the incident;
- Description of the incident;
- Status of all sound source use in the 24 hours preceding the incident;
- Water depth;
- Environmental conditions (e.g., wind speed and direction, Beaufort sea state, cloud cover, and visibility);
- Description of all marine mammal observations in the 24 hours preceding the incident;
- Species identification or description of the animal(s) involved;
- Fate of the animal(s); and
- Photographs or video footage of the animal(s) (if equipment is available).

Activities would not resume until NMFS is able to review the circumstances of the prohibited take. NMFS would work with Apache to determine what is necessary to minimize the likelihood of further prohibited take and ensure MMPA compliance. Apache would not be able to resume their activities until notified by NMFS via letter, email, or telephone.

In the event that Apache discovers an injured or dead marine mammal, and the lead PSO determines that the cause of the injury or death is unknown and the death is relatively recent (i.e., in less than a moderate state of decomposition as described in the next paragraph), Apache would immediately report the incident to the Chief of the Permits and Conservation Division, Office of Protected Resources, NMFS, and the NMFS Alaska Stranding Hotline and/or by email to the Alaska Regional Stranding Coordinators. The report would include the same information identified in the paragraph above. Activities would be able to continue while NMFS reviews the circumstances of the incident. NMFS would work with Apache to determine whether modifications in the activities are appropriate.

In the event that Apache discovers an injured or dead marine mammal, and the lead PSO determines that the injury or death is not associated with or related to the activities authorized in the IHA (e.g., previously wounded animal, carcass with moderate to advanced decomposition, or scavenger damage), Apache would report the incident to the Chief of the Permits and Conservation Division, Office of Protected Resources, NMFS, and the NMFS Alaska Stranding Hotline and/or by email to the Alaska Regional Stranding Coordinators, within 24 hours of the discovery. Apache would provide photographs or video footage (if available) or other documentation of the stranded animal sighting to NMFS and the Marine Mammal Stranding Network.

Estimated Take of Marine Mammals

Except with respect to certain activities not pertinent here, the MMPA defines ''harassment'' as: any act of pursuit, torment, or annoyance which (i) has the potential to injure a marine mammal or marine mammal stock in the wild [Level A harassment]; or (ii) has the potential to disturb a marine mammal or marine mammal stock in the wild by causing disruption of behavioral patterns, including, but not limited to, migration, breathing, nursing, breeding, feeding, or sheltering [Level B harassment]. Only take by Level B behavioral harassment is anticipated as a result of the proposed marine survey program. Anticipated impacts to marine mammals are associated with noise propagation from the sound sources (e.g., airguns and pingers) used in the seismic survey; no take is expected to result from the detonation of explosives onshore, as supported by the SSV study, or from vessel strikes.

Apache requests authorization to take five marine mammal species by Level B harassment. These five marine mammal species are: Cook Inlet beluga whale (*Delphinapterus leucas*); killer whale (*Orcinus orca*); harbor porpoise (*Phocoena phocoena*); harbor seal (*Phoca vitulina richardsi*), and Steller sea lion (*Eumetopias jubatus*).

The full suite of potential impacts to marine mammals was described in detail in the ''Potential Effects of the Specified Activity on Marine Mammals'' section found earlier in this document. The potential effects of sound from the proposed seismic survey might include one or more of the following: Tolerance; masking of natural sounds; behavioral disturbance; non-auditory physical effects; and, at least in theory, temporary or permanent hearing impairment (Richardson *et al.* 1995). The most common and likely impact would be from behavioral disturbance, including avoidance of the ensonified area or changes in speed, direction, and/or diving profile of the animal. Hearing impairment (TTS and PTS) are highly unlikely to occur based on the proposed mitigation and monitoring measures that would preclude marine mammals being exposed to noise levels high enough to cause hearing impairment.

For impulse sounds, such as those produced by airgun(s) used in the seismic survey, NMFS uses the 160 dB_{rms} re 1 μPa isopleth to indicate the onset of Level B harassment. To estimate take by Level B harassment, Apache provided calculations for the 160-dB isopleths and then overlaid those isopleths with the density of marine mammals in the total area ensonified within those isopleths over the time of the surveys. Apache provided a full description of the methodology used to estimate takes by harassment in its IHA application (see **ADDRESSES**), which is also provided in the following sections. NMFS used Apache's takes estimates in its analyses.

Basis for Estimating ''Take by Harassment''

As stated previously, it is current NMFS policy to estimate take by Level B harassment for impulse sounds at a received level of 160 dB_{rms} re 1μPa. As described earlier in this notice, impulsive sounds would be generated by airgun arrays that would be used to obtain geological data during the surveys. To estimate potential takes by Level B harassment in this application, as well as for mitigation radii to be implemented by PSOs, ranges to the 160 dB_{rms} re 1 μPa isopleths were estimated at three different water depths (5 m, 25 m, and 45 m) for nearshore surveys and at 80 m for channel surveys. The distances to this threshold for the nearshore survey locations are provided in Table 1 and correspond to the three transects modeled at each site in the onshore, nearshore, and parallel to shore directions. The distances to the thresholds for the channel survey locations are provided in Table 2 and correspond to the broadside and endfire directions. The areas ensonified to the 160 dB isopleth for the nearshore survey are provided in Table 3. The area ensonifed to the 160 dB isopleth for the channel survey is 389 km^2.

The following subsections describe the estimated densities of marine mammals that may occur in the areas where activities are planned, and areas of water that may be ensonified by pulsed sounds to ≥160 dB.

Marine mammal densities near the planned activities in Cook Inlet were estimated from the annual aerial surveys conducted by NMFS between 2000 and 2011 for Cook Inlet beluga whales (Rugh *et al.* 2000, 2001, 2002, 2003, 2004, 2005, 2006, 2007; Shelden *et al.* 2008, 2009, 2010; Hobbs *et al.* 2011). These surveys are flown in June to collect abundance data for beluga whales, but sightings of other marine mammals are also reported. Although these data are only collected in one month each year, these surveys provide the best available relatively long-term data set for sighting information in the proposed action area, but do not correct for missed whales or account for seasonal variations in

distribution or habitat use of each species.

The maximum and average densities over the course of the total survey years (2000–2011) are provided in Table 5. As discussed below, beluga whales are observed in higher concentrations near river mouths, particularly the Susitna River, due to feeding. In the IHA application for Area 1, Apache attempted to account for the higher concentrations near river mouths by using the highest number of beluga whales observed for each survey to provide a density for near river mouths. Conversely, to account for the lower concentrations away from river mouths, the average number of beluga whales observed for each survey was used to provide a density away from river mouths. However, based on comments received regarding this methodology, for the Area 2 IHA application, Apache has included only the highest daily total observed in the survey (not total over the entire survey period because of re-sighting). These densities were used to estimate the number of Level B takes incidental to the proposed activity.

TABLE 5—SUMMARY OF MARINE MAMMAL DENSITIES

Species	Density (number/km²)	
	Maximum	Average
Beluga whale (maximum number observed—rivers)	0.00128	0.00051
Harbor seal (total number observed)	0.00644	0.00317
Harbor porpoise (total number observed)	0.00179	0.00006
Killer whale (total number observed)	0.00011	0.00001
Steller sea lion (total number observed)	0.00035	0.00011

Fifteen species of marine mammals are known to occur in Cook Inlet, but only five (Cook Inlet beluga whales, killer whales, harbor porpoises, harbor seals, and Steller sea lions) are likely to be encountered during the proposed survey activities. Two of the five species (Cook Inlet beluga whales and western population of Steller sea lions) are listed as endangered under the ESA.

Potential Number of Takes by Harassment

This subsection provides estimates of the number of individuals potentially exposed to sound levels ≥ 160 dB_{rms} re 1 μPa during seismic survey operations. The estimates were calculated by multiplying the expected densities by the anticipated area ensonified by levels ≥ 160 dB_{rms} re 1 μPa by the number of expected days that will be subject to seismic survey activities in the action area. According to section 2 in Apache's IHA application, a survey crew will collect seismic data 10–12 hours per day over approximately 160 days over the course of 8 to 9 months. Apache assumes that over the course of these 160 days, 100 days would be working in the offshore region and 60 days would be working in the shallow, intermediate, and deep nearshore region. Of those 60 days in the nearshore region, 20 days would be spent working in each of the three depths. It is important to note that environmental conditions (such as ice, wind, and fog) will play a significant role in the actual number of operating days; therefore, these estimates are conservative in order to provide a basis for the probability of encountering these marine mammal species in the action area.

The number of estimated takes by Level B harassment was calculated using the following assumptions:

- The number of nearshore and shallow water survey days is 20 and daily acoustic footprint is 356 km².
- The number of nearshore and intermediate water depth survey days is 20 and daily acoustic footprint is 468 km².
- The number of nearshore and deep water depth survey days is 20 days and daily acoustic footprint is 455 km².
- The number of offshore survey days is 100 and daily acoustic footprint is 389 km².

Table 6 shows the probability of sightings per species for the second year of seismic surveys in Area 2 with the methods and assumptions outlined above. As noted earlier, the use of the NMML aerial survey data has inherent weaknesses. For example, the densities used here were calculated based on a relatively large area that was surveyed compared to Area 2, sightings of beluga whales are not corrected from missed animals, and the results do not account for changes in the seasonal distribution of all species.

In addition, the probability of sightings for harbor seals and Steller sea lions is higher than what is anticipated because there are no haul-out sites within the action area. These density estimates are skewed by the numbers observed in large haul outs during aerial surveys. Seals in the water usually travel in small groups or as single individuals; therefore, although Table 6 indicates an average of 204 and maximum of 414 seals to be observed, it is highly unlikely that those number of seals will actually be taken by harassment during the proposed seismic survey.

Similarly, and for many of the same reasons, the number of actual takes by Level B harassment of Steller sea lions is expected to be much lower than the average of four and maximum of 22. During the NMFS aerial surveys, no Steller sea lions were observed in upper Cook Inlet. Less than five Steller sea lions have been observed by the Port of Anchorage monitoring program, and those observed have been juvenile animals (likely male). To date, only one Steller sea lions has been observed during seismic survey operations conducted under the April 2012 IHA. Therefore, Apache anticipates that there will be less than five Steller sea lions in the proposed action area during the one-year effective period of the IHA, if issued.

The average and maximum observations for harbor porpoise and killer whales shown in Table 6 appear to be reasonable based on the NMFS aerial surveys, although the actual number of animals is expected to be low.

The average and maximum estimated sightings of Cook Inlet beluga whales in Area 2 are 32 and 82, respectively. However, it is important to note that a combination of factors—including extensive visual and acoustic monitoring used throughout this project, particularly for sighting beluga whales approaching the area—are expected to result in the actual number of takes being much lower than these estimates. In addition, the total number of days surveying that will actually occur near river mouths is much lower than the 160 days used to estimate takes in the different water depths; therefore, this take estimate is likely to be extremely conservative. As a result, due to the

actual number of days and hours Apache is likely to be operating air guns near river mouths and taking into account the monitoring and mitigation measures applicable when operating seismic survey equipment near rivers, Apache expects the actual number of takes by Level B harassment estimated for Cook Inlet beluga whales to be much lower than the numbers provided in Table 6.

TABLE 6—PROBABILITY OF SIGHTINGS PER SPECIES FOR YEAR 2

Species	Shallow (356 km²)		Intermediate (458 km²)		Deep (455 km²)		Offshore (389 km²)		Total	
	20 days		20 days		20 days		100 days		60 days	
	max	avg	max	avg	max	avg	max	avg	max	avg
Beluga whales	9.1	3.6	11.7	4.6	11.6	4.6	49.7	19.7	82.1	32.6
Harbor seals	45.9	22.6	59.0	29.0	58.6	28.9	250.5	123.4	414	203.8
Harbor porpoises	12.8	0.4	16.4	0.6	16.3	0.6	69.7	2.4	115.2	4.0
Killer whales	0.8	0.1	1.0	0.1	1.0	0.1	4.3	0.6	7.2	1.0
Steller sea lions	2.5	0.8	3.2	1.1	3.2	1.0	13.6	4.5	22.5	7.4

Estimated Take Conclusions

Cetaceans—Effects on cetaceans are generally expected to be restricted to avoidance of an area around the seismic survey and short-term changes in behavior, falling within the MMPA definition of ''Level B harassment''.

Using the 160 dB criterion, the requested take numbers of individual cetaceans exposed to sounds > 160 dB_{rms} re 1 μPa represent varying proportions of the populations of each species in Cook Inlet (Table 7). For Cook Inlet beluga whales, Apache requests 30 takes by Level B harassment. The number of beluga whale takes requested is based, in part, on the average number of sightings estimated over the course of the survey (see Table 6), as well as the seasonal distribution and habitat use of belugas in Cook Inlet and the monitoring information acquired during the seismic survey conducted under the 2012 IHA. This number is approximately 10 percent of the population of approximately 284 animals (Hobbs *et al.* 2011). For other cetaceans that might occur in the vicinity of the seismic survey in Cook Inlet, the requested takes represent an even smaller percentage of their respective populations. The requested takes of 10 killer whales and 20 harbor porpoises represent 0.89 percent and 0.06 percent of their respective populations in the proposed action area.

Pinnipeds—Two pinniped species may be encountered in the proposed action area, but the harbor seal is likely to be the more abundant species in this area. The number of takes requested for individuals exposed to sounds at received levels >160 dB_{rms} re 1 μPa during the proposed seismic survey are as follows: harbor seals (200) and Steller sea lions (20). These numbers represent 0.69 percent and 0.12 percent of their respective populations in the proposed action area.

TABLE 7—REQUESTED NUMBER OF TAKES

Species	Number of requested takes	Population abundance	Percent of population
Beluga whales	30	284	10.56
Harbor seals	200	29,175	0.69
Harbor porpoises	20	31,406	0.06
Killer whales	10	1,437	0.89
Steller sea lions	20	41,197	0.12

Preliminary Determinations

Negligible Impact

NMFS has defined ''negligible impact'' in 50 CFR 216.103 as ''* * * an impact resulting from the specified activity that cannot be reasonably expected to, and is not reasonably likely to, adversely affect the species or stock through effects on annual rates of recruitment or survival.'' In making a negligible impact determination, NMFS considers a variety of factors, including but not limited to: (1) The number of anticipated mortalities; (2) the number and nature of anticipated injuries; (3) the number, nature, intensity, and duration of Level B harassment; and (4) the context in which the takes occur.

Given the required mitigation and related monitoring, no injuries or mortalities are anticipated to occur as a result of Apache's proposed seismic survey in Cook Inlet, and none are proposed to be authorized. Additionally, animals in the area are not expected to incur hearing impairment (i.e., TTS or PTS) or non-auditory physiological effects. The small number of takes that are anticipated are expected to be limited to short-term Level B behavioral harassment. Although it is possible that some marine mammals individuals may be exposed to sounds from seismic survey activities more than once, the duration of these multi-exposures is expected to be low since both the animals and the survey vessels will be moving constantly in and out of the survey area and the seismic airguns do not operate continuously all day, but for a few hours at a time totaling about 12 hours a day.

Odontocete (including Cook Inlet beluga whales, killer whales, and harbor porpoises) reactions to seismic energy pulses are usually assumed to be limited to shorter distances from the airgun(s) than are those of mysticetes, in part because odontocete low-frequency hearing is assumed to be less sensitive than that of mysticetes. When in the Canadian Beaufort Sea in summer, belugas appear to be fairly responsive to seismic energy, with few being sighted within 6–12 mi (10–20 km) of seismic vessels during aerial surveys (Miller *et al.* 2005). However, as noted above, Cook Inlet belugas are more accustomed

to anthropogenic sound than beluga whales in the Beaufort Sea. Accordingly, NMFS does not find this data determinative here. Also, due to the dispersed distribution of beluga whales in Cook Inlet during winter and the concentration of beluga whales in upper Cook Inlet from late April through early fall, belugas would likely occur in small numbers in the phase two survey area during the survey period and few will likely be affected by the survey activity in a manner that would be considered behavioral harassment. In addition, due to the constant moving of the survey vessel, the duration of the noise exposure by cetaceans to seismic impulse would be brief. For the same reason, it is unlikely that any individual animal would be exposed to high received levels multiple times.

Taking into account the mitigation measures that are planned, effects on cetaceans are generally expected to be restricted to avoidance of a limited area around the survey operation and short-term changes in behavior, falling within the MMPA definition of ''Level B harassment''. Animals are not expected to permanently abandon any area that is surveyed, and any behaviors that are interrupted during the activity are expected to resume once the activity ceases. Only a very small portion of marine mammal habitat will be affected at any time, and other areas within Cook Inlet will be available for necessary biological functions. In addition, the area where the survey will take place is not known to be an important location where beluga whales congregate for feeding, calving, or nursing.

Furthermore, the estimated numbers of animals potentially exposed to sound levels sufficient to cause Level B harassment are low percentages of the population sizes in Cook Inlet, as shown in Table 7.

Mitigation measures such as controlled vessel speed, dedicated marine mammal observers, non-pursuit, and shut downs or power downs when marine mammals are seen within defined ranges will further reduce short-term reactions and minimize any effects on hearing sensitivity. In all cases, the effects of the seismic survey are expected to be short-term, with no lasting biological consequence. Therefore, the exposure of cetaceans to sounds produced by the phase two seismic survey is not anticipated to have an effect on annual rates or recruitment or survival.

Some individual pinnipeds may be exposed to sound from the proposed marine surveys more than once during the time frame of the project. However, as discussed previously, due to the constant moving of the survey vessel, the probability of an individual pinniped being exposed to sound multiple times is much lower than if the source is stationary. Taking into account the mitigation measures that are planned, effects on pinnipeds are generally expected to be restricted to avoidance of a limited area around the survey operation and short-term changes in behavior, falling within the MMPA definition of ''Level B harassment''. Animals are not expected to permanently abandon any area that is surveyed, and any behaviors that are interrupted during the activity are expected to resume once the activity ceases. Only a very small portion of marine mammal habitat will be affected at any time, and other areas within Cook Inlet will be available for necessary biological functions. In addition, the area where the survey will take place is not known to be an important location where pinnipeds haulout. The closest known haulout site is located on Kalgin Island, which is about 22 km from the McArther River. Therefore, NMFS has preliminarily determined that the exposure of pinnipeds to sounds produced by the proposed seismic survey in Cook Inlet is not expected to result in more than Level B harassment and is anticipated to have no more than a negligible impact on the animals.

Potential impacts to marine mammal habitat were discussed previously in this document (see the ''Anticipated Effects on Habitat'' section). Although some disturbance is possible to food sources of marine mammals, the impacts are anticipated to be minor enough as to not affect rates of recruitment or survival of marine mammals in the area. Based on the size of Cook Inlet where feeding by marine mammals occurs versus the localized area of the marine survey activities, any missed feeding opportunities in the direct project area would be minor based on the fact that other feeding areas exist elsewhere.

Small Numbers

The requested takes proposed to be authorized represent 10 percent of the Cook Inlet beluga whale population of approximately 284 animals (Hobbs *et al.,* 2011), 0.89 percent of the combined Alaska resident stock and Gulf of Alaska, Aleutian Island and Bering Sea stock of killer whales (1,123 residents and 314 transients), and 0.06 percent of the Gulf of Alaska stock of approximately 31,046 harbor porpoises. The take requests presented for harbor seals represent 0.69 percent of the Gulf of Alaska stock of approximately 29,175 animals. The requested takes proposed for Steller sea lions represent 0.12 percent of the western stock of approximately 41,197 animals. These take estimates represent the percentage of each species or stock that could be taken by Level B behavioral harassment if each animal is taken only once. The number of marine mammals taken is small relative to the affected species or stocks. In addition, the mitigation and monitoring measures (described previously in this document) proposed for inclusion in the IHA (if issued) are expected to reduce even further any potential disturbance to marine mammals.

Conclusion

Based on the analysis contained herein of the likely effects of the specified activity on marine mammals and their habitat, and taking into consideration the implementation of the mitigation and monitoring measures, NMFS preliminarily finds that the total taking from Apache's proposed seismic survey in Cook Inlet will have a negligible impact on the affected species or stocks. NMFS also preliminarily finds that small numbers of marine mammals will be taken relative to the populations of the affected species or stocks.

Impact on Availability of Affected Species or Stock for Taking for Subsistence Uses

Section 101(a)(5)(D) also requires NMFS to determine that the authorization will not have an unmitigable adverse effect on the availability of marine mammal species or stocks for subsistence use. NMFS has defined ''unmitigable adverse impact'' in 50 CFR 216.103 as: An impact resulting from the specified activity: (1) That is likely to reduce the availability of the species to a level insufficient for a harvest to meet subsistence needs by: (i) Causing the marine mammals to abandon or avoid hunting areas; (ii) Directly displacing subsistence users; or (iii) Placing physical barriers between the marine mammals and the subsistence hunters; and (2) That cannot be sufficiently mitigated by other measures to increase the availability of marine mammals to allow subsistence needs to be met.

The subsistence harvest of marine mammals transcends the nutritional and economic values attributed to the animal and is an integral part of the cultural identity of the region's Alaska Native communities. Inedible parts of the whale provide Native artisans with materials for cultural handicrafts, and the hunting itself perpetuates Native traditions by transmitting traditional

skills and knowledge to younger generations (NOAA 2007). However, due to dramatic declines in the Cook Inlet beluga whale population, on May 21, 1999, legislation was passed to temporarily prohibit (until October 1, 2000) the taking of Cook Inlet belugas under the subsistence harvest exemption in section 101(b) of the MMPA without a cooperative agreement between NMFS and the affected Alaska Native Organizations (ANOs) (Pub. L. 106–31, section 3022, 113 Stat. 57,100). That prohibition was extended indefinitely on December 21, 2000 (Pub. L. 106–553, section 1(a)(2), 114 Stat. 2762). NMFS subsequently entered into six annual co-management agreements (2000–2003, 2005–2006) with the Cook Inlet Marine Mammal Council, an ANO representing Cook Inlet beluga hunters, which allowed for the harvest of 1–2 belugas. On October 15, 2008, NMFS published a final rule that established long-term harvest limits on the Cook Inlet beluga whales that may be taken by Alaska Natives for subsistence purposes (73 FR 60976). That rule prohibits harvest for a 5-year period (2008–2012), if the average abundance for the Cook Inlet beluga whales from the prior five years (2003–2007) is below 350 whales. The next 5-year period that could allow for a harvest (2013–2017), would require the previous five-year average (2008–2012) to be above 350 whales.

There is a low level of subsistence hunting for harbor seals in Cook Inlet. Seal hunting occurs opportunistically among Alaska Natives who may be fishing or travelling in the upper Inlet near the mouths of the Susitna River, Beluga River, and Little Susitna River. Consistent with NMFS' implementing regulations, Apache met with the Cook Inlet Marine Mammal Council (CIMMC)—a now dissolved ANO that represented Cook Inlet tribes—on March 29, 2011, to discuss the proposed activities and discuss any subsistence concerns. Apache also met with the Tyonek Native Corporation on November 9, 2010 and the Salamatof Native Corporation on November 22, 2010. Additional meetings were held with the Native Village of Tyonek, the Kenaitze Indian Tribe, and Knik Tribal Council, and the Ninilchik Traditional Council. According to Apache, during these meetings, no concerns were raised regarding potential conflict with subsistence harvest of marine mammals. Apache has identified the following features that are intended to reduce impacts to subsistence users:

- In-water seismic activities will follow mitigation procedures to minimize effects on the behavior of marine mammals and, therefore, opportunities for harvest by Alaska Native communities; and
- Regional subsistence representatives may support recording marine mammal observations along with marine mammal biologists during the monitoring programs and will be provided with annual reports.

Since the issuance of the April 2012 IHA, Apache has maintained regular and consistent communication with federally recognized Alaska Natives. The Alaska Natives, Native Corporations, and ANOs that Apache has communicated with include: The Native Village of Tyonek; Tyonek Native Corporation; Ninilchik Native Association; Ninilchik Traditional Council; Salamatof Native Association; Knikatnu; Knik Native Council; Alexander Creek; Cook Inlet Region, Inc.; the Native Village of Eklutna; Kenaitze Indian Tribe; and Seldovia Native Association. Apache has shared information gathered during the seismic survey conducted under the April 2012 IHA, and plans on hosting an information exchange with Alaska Native Villages, Native Corporations, and other Non-Governmental Organizations in the spring of 2013 where data from the past year's monitoring operations would be presented.

Apache concluded, and NMFS agrees, that the size of the affected area, mitigation measures, and input from the consultations Alaska Natives should result in the proposed action having no effect on the availability of marine mammals for subsistence uses. Apache and NMFS recognize the importance of ensuring that ANOs and federally recognized tribes are informed, engaged, and involved during the permitting process and will continue to work with the ANOs and tribes to discuss operations and activities.

On February 6, 2012, in response to requests for government-to-government consultations by the CIMMC and Native Village of Eklutna, NMFS met with representatives of these two groups and a representative from the Ninilchik. We engaged in a discussion about the proposed IHA for Area 1, the MMPA process for issuing an IHA, concerns regarding Cook Inlet beluga whales, and how to achieve greater coordination with NMFS on issues that impact tribal concerns. Following the publication of the proposed IHA, NMFS will be contacting the local Native Villages to inform them of the availability of the **Federal Register** notice and the opening of the public comment period.

NMFS anticipates that any effects from Apache's proposed seismic survey on marine mammals, especially harbor seals and Cook Inlet beluga whales, which are or have been taken for subsistence uses, would be short-term, site specific, and limited to inconsequential changes in behavior and mild stress responses. NMFS does not anticipate that the authorized taking of affected species or stocks will reduce the availability of the species to a level insufficient for a harvest to meet subsistence needs by: (1) Causing the marine mammals to abandon or avoid hunting areas; (2) directly displacing subsistence users; or (3) placing physical barriers between the marine mammals and the subsistence hunters; and that cannot be sufficiently mitigated by other measures to increase the availability of marine mammals to allow subsistence needs to be met. Therefore, NMFS has preliminarily determined that the proposed regulations will not have an unmitigable adverse impact on the availability of marine mammal stocks for subsistence uses.

Endangered Species Act (ESA)

There are two marine mammal species listed as endangered under the ESA with confirmed or possible occurrence in the proposed project area: the Cook Inlet beluga whale and Steller sea lion. In addition, the proposed action would occur within designated critical habitat for the Cook Inlet beluga whales. On September 2, 2011, NMFS' Permits and Conservation Division initiated consultation under section 7 of the ESA with the Alaska Regions, NMFS, Protected Resources Division on the issuance of IHAs to Apache under section 101(a)(5)(D) of the MMPA, which includes the action area for this proposed activity. In February 2012, this consultation was concluded and a Biological Opinion was issued. The Biological Opinion determined that the issuance of IHAs is not likely to jeopardize the continued existence of the Cook Inlet beluga whales or the western DPS of Steller sea lions, or destroy or adversely modify Cook Inlet beluga whale critical habitat. Finally, the BiOp included an Incidental Take Statement (ITS) for Cook Inlet beluga whales and Steller sea lions. The ITS contains reasonable and prudent measures implemented by terms and conditions to minimize the effects of this take.

National Environmental Policy Act (NEPA)

NMFS is currently preparing an Environmental Assessment, pursuant to NEPA, to determine whether or not this proposed activity may have a significant effect on the human environment. This

analysis will be completed prior to the issuance or denial of the IHA.

Proposed Authorization

As a result of these preliminary determinations, NMFS proposes to authorize the take of marine mammals incidental to Apache's seismic survey in Cook Inlet, Alaska, provided the previously mentioned mitigation, monitoring, and reporting requirements are incorporated.

Dated: December 4, 2012.

Helen M. Golde,

Acting Director, Office of Protected Resources, National Marine Fisheries Service.

[FR Doc. 2012–29740 Filed 12–5–12; 4:15 pm]

BILLING CODE 3510–22–P

DEPARTMENT OF COMMERCE

National Oceanic and Atmospheric Administration

RIN 0648–XC361

Schedules for Atlantic Shark Identification Workshops and Protected Species Safe Handling, Release, and Identification Workshops

AGENCY: National Marine Fisheries Service (NMFS), National Oceanic and Atmospheric Administration (NOAA), Commerce.

ACTION: Notice of public workshops.

SUMMARY: Free Atlantic Shark Identification Workshops and Protected Species Safe Handling, Release, and Identification Workshops will be held in January, February, and March of 2013. Certain fishermen and shark dealers are required to attend a workshop to meet regulatory requirements and to maintain valid permits. Specifically, the Atlantic Shark Identification Workshop is mandatory for all federally permitted Atlantic shark dealers. The Protected Species Safe Handling, Release, and Identification Workshop is mandatory for vessel owners and operators who use bottom longline, pelagic longline, or gillnet gear, and who have also been issued shark or swordfish limited access permits. Additional free workshops will be conducted during 2013 and will be announced in a future notice.

DATES: The Atlantic Shark Identification Workshops will be held January 17, February 21, and March 14, 2013.

The Protected Species Safe Handling, Release, and Identification Workshops will be held on January 16, January 23, February 7, February 13, March 6, and March 13, 2013.

See **SUPPLEMENTARY INFORMATION** for further details.

ADDRESSES: The Atlantic Shark Identification Workshops will be held in Kenner, LA; Norfolk, VA; and Fort Pierce, FL.

The Protected Species Safe Handling, Release, and Identification Workshops will be held in Manahawkin, NJ; Panama City, FL; Portland, ME; Kitty Hawk, NC; Houston, TX; and Clearwater, FL.

See **SUPPLEMENTARY INFORMATION** for further details on workshop locations.

FOR FURTHER INFORMATION CONTACT: Richard A. Pearson by phone: (727) 824–5399, or by fax: (727) 824–5398.

SUPPLEMENTARY INFORMATION: The workshop schedules, registration information, and a list of frequently asked questions regarding these workshops are posted on the Internet at: *http://www.nmfs.noaa.gov/sfa/hms/workshops/.*

Atlantic Shark Identification Workshops

Since January 1, 2008, Atlantic shark dealers have been prohibited from receiving, purchasing, trading, or bartering for Atlantic sharks unless a valid Atlantic Shark Identification Workshop certificate is on the premises of each business listed under the shark dealer permit which first receives Atlantic sharks (71 FR 58057; October 2, 2006). Dealers who attend and successfully complete a workshop are issued a certificate for each place of business that is permitted to receive sharks. These certificate(s) are valid for 3 years. Approximately 80 free Atlantic Shark Identification Workshops have been conducted since January 2007.

Currently, permitted dealers may send a proxy to an Atlantic Shark Identification Workshop. However, if a dealer opts to send a proxy, the dealer must designate a proxy for each place of business covered by the dealer's permit which first receives Atlantic sharks. Only one certificate will be issued to each proxy. A proxy must be a person who is currently employed by a place of business covered by the dealer's permit; is a primary participant in the identification, weighing, and/or first receipt of fish as they are offloaded from a vessel; and who fills out dealer reports. Atlantic shark dealers are prohibited from renewing a Federal shark dealer permit unless a valid Atlantic Shark Identification Workshop certificate for each business location which first receives Atlantic sharks has been submitted with the permit renewal application. Additionally, trucks or other conveyances that are extensions of a dealer's place of business must possess a copy of a valid dealer or proxy Atlantic Shark Identification Workshop certificate.

Workshop Dates, Times, and Locations

1. January 17, 2013, 12 p.m.–4 p.m., LaQuinta Inn & Suites, 2610 Williams Boulevard, Kenner, LA 70062.
2. February 21, 2013, 12 p.m.–4 p.m., LaQuinta Inn & Suites, 1387 North Military Highyway, Norfolk, VA 23502.
3. March 14, 2013, 12 p.m.–4 p.m., LaQuinta Inn & Suites, 2655 Crossroads Parkway, Fort Pierce, FL 34945.

Registration

To register for a scheduled Atlantic Shark Identification Workshop, please contact Eric Sander at *esander@peoplepc.com* or at (386) 852–8588.

Registration Materials

To ensure that workshop certificates are linked to the correct permits, participants will need to bring the following specific items to the workshop:

- Atlantic shark dealer permit holders must bring proof that the attendee is an owner or agent of the business (such as articles of incorporation), a copy of the applicable permit, and proof of identification.
- Atlantic shark dealer proxies must bring documentation from the permitted dealer acknowledging that the proxy is attending the workshop on behalf of the permitted Atlantic shark dealer for a specific business location, a copy of the appropriate valid permit, and proof of identification.

Workshop Objectives

The Atlantic Shark Identification Workshops are designed to reduce the number of unknown and improperly identified sharks reported in the dealer reporting form and increase the accuracy of species-specific dealer-reported information. Reducing the number of unknown and improperly identified sharks will improve quota monitoring and the data used in stock assessments. These workshops will train shark dealer permit holders or their proxies to properly identify Atlantic shark carcasses.

Protected Species Safe Handling, Release, and Identification Workshops

Since January 1, 2007, shark limited-access and swordfish limited-access permit holders who fish with longline or gillnet gear have been required to submit a copy of their Protected Species Safe Handling, Release, and Identification Workshop certificate in order to renew either permit (71 FR 58057; October 2, 2006). These

certificate(s) are valid for 3 years. As such, vessel owners who have not already attended a workshop and received a NMFS certificate, or vessel owners whose certificate(s) will expire prior to the next permit renewal, must attend a workshop to fish with, or renew, their swordfish and shark limited-access permits. Additionally, new shark and swordfish limited-access permit applicants who intend to fish with longline or gillnet gear must attend a Protected Species Safe Handling, Release, and Identification Workshop and submit a copy of their workshop certificate before either of the permits will be issued. Approximately 142 free Protected Species Safe Handling, Release, and Identification Workshops have been conducted since 2006.

In addition to certifying vessel owners, at least one operator on board vessels issued a limited-access swordfish or shark permit that uses longline or gillnet gear is required to attend a Protected Species Safe Handling, Release, and Identification Workshop and receive a certificate. Vessels that have been issued a limited-access swordfish or shark permit and that use longline or gillnet gear may not fish unless both the vessel owner and operator have valid workshop certificates onboard at all times. Vessel operators who have not already attended a workshop and received a NMFS certificate, or vessel operators whose certificate(s) will expire prior to their next fishing trip, must attend a workshop to operate a vessel with swordfish and shark limited-access permits that uses longline or gillnet gear.

Workshop Dates, Times, and Locations

1. January 16, 2013, 9 a.m.–5 p.m., Holiday Inn, 151 Route 72 East, Manahawkin, NJ 08050.
2. January 23, 2013, 9 a.m.– 5 p.m., Holiday Inn Select, 2001 Martin Luther King Boulevard, Panama City, FL 32405.
3. February 7, 2013, 9 a.m.– 5 p.m., Holiday Inn, 88 Spring Street, Portland, ME 04101.
4. February 13, 2013, 9 a.m.– 5 p.m., Hilton Garden Inn, 5353 North Virginia Dare Trail, Kitty Hawk, NC 27949.
5. March 6, 2013, 9 a.m.– 5 p.m., Holiday Inn Express, 8080 South Main Street, Houston, TX 77025.
6. March 13, 2013, 9 a.m.– 5 p.m., Holiday Inn Express, 2580 Gulf to Bay Boulevard, Clearwater, FL 33765.

Registration

To register for a scheduled Protected Species Safe Handling, Release, and Identification Workshop, please contact Angler Conservation Education at (386) 682–0158.

Registration Materials

To ensure that workshop certificates are linked to the correct permits, participants will need to bring the following specific items with them to the workshop:

- Individual vessel owners must bring a copy of the appropriate swordfish and/or shark permit(s), a copy of the vessel registration or documentation, and proof of identification.
- Representatives of a business-owned or co-owned vessel must bring proof that the individual is an agent of the business (such as articles of incorporation), a copy of the applicable swordfish and/or shark permit(s), and proof of identification.
- Vessel operators must bring proof of identification.

Workshop Objectives

The Protected Species Safe Handling, Release, and Identification Workshops are designed to teach longline and gillnet fishermen the required techniques for the safe handling and release of entangled and/or hooked protected species, such as sea turtles, marine mammals, and smalltooth sawfish. In an effort to improve reporting, the proper identification of protected species will also be taught at these workshops. Additionally, individuals attending these workshops will gain a better understanding of the requirements for participating in these fisheries. The overall goal of these workshops is to provide participants with the skills needed to reduce the mortality of protected species, which may prevent additional regulations on these fisheries in the future.

Authority: 16 U.S.C. 1801 *et seq.*

Dated: December 4, 2012.

Emily H. Menashes,

Deputy Director, Office of Sustainable Fisheries, National Marine Fisheries Service.

[FR Doc. 2012–29754 Filed 12–7–12; 8:45 am]

BILLING CODE 3510–22–P

DEPARTMENT OF COMMERCE

Patent and Trademark Office

Grace Period Study

ACTION: Proposed collection; comment request.

SUMMARY: The United States Patent and Trademark Office (USPTO), as part of its continuing effort to reduce paperwork and respondent burden, invites the general public and other Federal agencies to take this opportunity to comment on this new information collection, as required by the Paperwork Reduction Act of 1995, Public Law 104–13 (44 U.S.C. 3506(c)(2)(A)).

DATES: Written comments must be submitted on or before February 8, 2013.

ADDRESSES: You may submit comments by any of the following methods:

- Email: *InformationCollection@uspto.gov*. Include ''0651–00xx Grace Period Study comment'' in the subject line of the message.
- Mail: Susan K. Fawcett, Records Officer, Office of the Chief Information Officer, United States Patent and Trademark Office, P.O. Box 1450, Alexandria, VA 22313–1450.
- Federal Rulemaking Portal: *http://www.regulations.gov*.

FOR FURTHER INFORMATION CONTACT: Requests for additional information should be directed to the attention of Jim Moore, Attorney Advisor, Office of Governmental Affairs, United States Patent and Trademark Office, P.O. Box 1450, Alexandria, VA 22313–1450; by telephone at 571–272–5661; or by email to *James.Moore@USPTO.Gov* with ''Paperwork'' in the subject line.

SUPPLEMENTARY INFORMATION:

I. Abstract

The United States' grace period, which permits exceptions to absolute novelty, figures centrally in the international discourse on patent law harmonization. The grace period allows individuals to improve upon their ideas by sharing them with the research and business communities without jeopardizing their intellectual property interests. Many European countries, however, lack adequate grace periods. The consequences of this are not fully understood. Few studies in the past ten years have dealt with the grace period, and none of them have quantified the effects of premature disclosure on researchers' failure to apply for or receive patents. To study this issue, the USPTO plans to conduct a study to estimate the commercial opportunities lost as a result of the lack of grace periods.

As part of this study, the USPTO plans to survey European scientific researchers from select European research institutions. The results from this USPTO-sponsored study would provide current, quantitative data on the effects of the premature disclosure on European patenting. The data collected from the survey can be used to estimate the value of lost commercial opportunities in Europe due to the lack

of grace periods for these patents. This study would support the USPTO's efforts to be a leader on intellectual property matters internationally and to promote efficiency and cooperation in the global patent system.

The USPTO plans to survey scientific researchers affiliated with select European universities who have published journal articles disclosing potentially patentable materials during a five year period. The universities will be selected from the Times Higher Education university rankings for specific, patent-intensive research areas.

The USPTO envisions that the respondents will be surveyed only once. The survey may be distributed in waves for convenience.

The Grace Period Study survey will be an electronic survey. The cover letter that will be distributed with the survey will reference the journal article used to identify the respondent, explain why the USPTO is conducting the survey, explain that the responses will be kept confidential, and provide instructions on how to access the survey. Pre-response and reminder letters, in addition to a brief non-response follow-up for a small sample of nonrespondents, will be used to encourage response from the sample members.

This is a voluntary survey and all responses will remain confidential. The collected data will not be linked to the respondent and contact information that is used for sampling purposes will be maintained in a separate file from the quantitative data. Respondents are not required to provide any identifying information such as their name, address, or Social Security Number. In order to access and complete the online survey, respondents will need to use a username, password, and survey ID number.

II. Method of Collection

Electronically over the Internet through a secure, third-party survey distributor using access information supplied by IIPI.

III. Data

OMB Number: 0651–00xx.

Form Number(s): No form numbers.

Type of Review: New information collection.

Affected Public: Businesses or other for-profits and non-profit institutions.

Estimated Number of Respondents: 420 responses per year. The USPTO estimates that no responses will be received from small entities. Out of a sample size of 3,000, the USPTO estimates that 420 completed surveys will be received, for a response rate of 14%. This estimate is based on the response rate of a similar survey of German researchers conducted by the German Ministry for Education and Research (BMBF).

Estimated Time per Response: The USPTO estimates that it will take approximately 10 minutes (0.17 hours) to complete this survey. This estimated time includes reading the instructions for the survey, gathering the necessary information, completing the survey, and submitting it to the USPTO.

Estimated Total Annual Respondent Burden Hours: 71 hours.

Estimated Total Annual Respondent Cost Burden: $3,287. The USPTO estimates that scientists will be completing these surveys and that their hourly rate will be comparable to the hourly rate for scientists in the United States. Using the hourly mean rate of $46.29 from the U.S. Bureau of Labor Statistics for physical scientists and others, the USPTO estimates $3,287 per year for the respondent cost burden for this collection.

Item	Estimated time for response (min)	Estimated annual responses	Estimated annual burden hours
Grace Period Study Survey	10	420	71
Totals		420	71

Estimated Total Annual Non-hour Respondent Cost Burden: $0. There are no annual (non-hour) costs for this information collection. The USPTO covers the costs of all survey materials.

IV. Request for Comments

Comments are invited on: (a) Whether the proposed collection of information is necessary for the proper performance of the functions of the agency, including whether the information shall have practical utility; (b) the accuracy of the agency's estimate of the burden (including hours and cost) of the proposed collection of information; (c) ways to enhance the quality, utility, and clarity of the information to be collected; and (d) ways to minimize the burden of the collection of information on respondents, *e.g.,* the use of automated collection techniques or other forms of information technology.

Comments submitted in response to this notice will be summarized or included in the request for OMB approval of this information collection; they also will become a matter of public record.

Dated: December 4, 2012.

Susan K. Fawcett,

Records Officer, USPTO, Office of the Chief Information Officer.

[FR Doc. 2012–29637 Filed 12–7–12; 8:45 am]

BILLING CODE 3510–16–P

CORPORATION FOR NATIONAL AND COMMUNITY SERVICE

Proposed Information Collection; Comment Request

AGENCY: Corporation for National and Community Service.

ACTION: Notice.

SUMMARY: The Corporation for National and Community Service (CNCS), as part of its continuing effort to reduce paperwork and respondent burden, conducts a pre-clearance consultation program to provide the general public and federal agencies with an opportunity to comment on proposed and/or continuing collections of information in accordance with the Paperwork Reduction Act of 1995 (PRA95) (44 U.S.C. 3506(c)(2)(A)). This program helps to ensure that requested data can be provided in the desired format, reporting burden (time and financial resources) is minimized, collection instruments are clearly understood, and the impact of collection requirement on respondents can be properly assessed.

Currently, CNCS is soliciting comments concerning its proposed renewal of its Senior Corps Project Progress Report (PPR) (OMB Control Number 3045–0033). The Senior Corps PPR has two components: (1) Narratives and work plans, and (2) the Progress Report Supplement (PRS), which is an annual survey of volunteer demographics and grantee characteristics. The resulting data is used by grantees and the CNCS to track performance, as well as to identify trends and to support management and

analysis. In conjunction with the PPR renewal, CNCS proposes to change the PPR reporting frequency of narratives and work plans from annual to semi-annual submission.

Copies of the information collection requests can be obtained by contacting the office listed in the address section of this notice.

DATES: Written comments must be submitted to the individual and office listed in the **ADDRESSES** section by February 8, 2013.

ADDRESSES: You may submit comments, identified by the title of the information collection activity, by any of the following methods:

(1) *By mail sent to:* Corporation for National and Community Service, Senior Corps; Attention Ms. Angela Roberts, Associate Director, Room 9401; 1201 New York Avenue NW., Washington, DC 20525.

(2) By hand delivery or by courier to the CNCS mailroom on the 8th Floor at the mail address given in paragraph (1) above, between 9 a.m. and 4 p.m. Monday through Friday, except Federal holidays.

(3) *By fax to:* (202) 606–3475, Attention Ms. Angela Roberts, Associate Director

(4) Electronically through *www.regulations.gov*. Individuals who use a telecommunications device for the deaf (TTY–TDD) may call 1–800–833–3722 between 8:00 a.m. and 8:00 p.m. Eastern Time, Monday through Friday.

FOR FURTHER INFORMATION CONTACT: Angela Roberts, (202) 606–6822 or by email at *aroberts@cns.gov*.

SUPPLEMENTARY INFORMATION: CNCS is particularly interested in comments that:

- Evaluate whether the proposed collection of information is necessary for the proper performance of the functions of CNCS, including whether the information will have practical utility;
- Evaluate the accuracy of the agency's estimate of the burden of the proposed collection of information, including the validity of the methodology and assumptions used;
- Enhance the quality, utility, and clarity of the information to be collected; and
- Minimize the burden of the collection of information on those who are expected to respond, including the use of appropriate automated, electronic, mechanical, or other technological collection techniques or other forms of information technology (e.g., permitting electronic submissions of responses).

Background

The Progress Report (PPR) was designed to ensure that grantees of the Senior Corps' programs (RSVP, Foster Grandparent and Senior Companion Programs) address and fulfill legislated program purposes; meet agency program management and grant requirements; track and measure progress to benefit the local project and its contributions to senior volunteers and the community; and to report progress toward work plan objectives agreed upon in the granting of the award.

Current Action

CNCS seeks to renew and revise the current OMB-approved Progress Report. In August of 2013, Senior Corps revised its OMB approved Grant Application Instructions. The revised Grant Application Instructions incorporated new standard national performance measures for Senior Corps programs. The revised PPR will align with the new national performance measures, and allow grantees to enter actual data and progress towards plans and targets set in the Grant Application.

The revised PPR will be used in the same manner as the existing PPR to report progress toward accomplishing work plan goals and objectives, reporting volunteer and service outputs, reporting actual outcomes related to self-nominated performance measures meeting challenges encountered, describing significant activities, and requesting technical assistance. CNCS also seeks to continue using the current application until the revised application is approved by OMB. The current application is due to expire on August 31, 2013.

Type of Review: Renewal.

Agency: Corporation for National and Community Service.

Title: Senior Corps Project Progress Report.

OMB Number: 3045–0033.

Agency Number: CNCS Form 1020.

Affected Public: Sponsors of Senior Corps grants.

Total Respondents: 1,250.

Frequency: Work plans and narratives: Semi-Annual; Progress Report Supplement: Annual.

Average Time per Response: Work plans and narratives: 4 hours. Progress Report Supplement: 8 hours.

Estimated Total Burden Hours: 20,000 hours.

Total Burden Cost (capital/startup): None.

Total Burden Cost (operating/maintenance): None.

Comments submitted in response to this notice will be summarized and/or included in the request for Office of Management and Budget approval of the information collection request; they will also become a matter of public record.

Dated: December 3, 2012.

Erwin Tan,

Director, Senior Corps.

[FR Doc. 2012–29781 Filed 12–7–12; 8:45 am]

BILLING CODE 6050–$$–P

CORPORATION FOR NATIONAL AND COMMUNITY SERVICE

Revision of Information Collection; Comment Request

AGENCY: Corporation for National and Community Service.

ACTION: Notice.

SUMMARY: The Corporation for National and Community Service (CNCS), as part of its continuing effort to reduce paperwork and respondent burden, conducts a pre-clearance consultation program to provide the general public and federal agencies with an opportunity to comment on proposed and/or continuing collections of information in accordance with the Paperwork Reduction Act of 1995 (PRA95) (44 U.S.C. Sec. 3506(c)(2)(A)). This program helps to ensure that requested data can be provided in the desired format, reporting burden (time and financial resources) is minimized, collection instruments are clearly understood, and the impact of collection requirement on respondents can be properly assessed.

Currently, CNCS is soliciting comments concerning its proposed revision of its Senior Corps Grant Application (424–NSSC) (OMB Control Number 3045–0035). CNCS proposes to revise the Senior Corps Grant Application with the following modifications to:

- Align language with standard national performance measure requirements; revise the Grant Application Narrative questions to clarify new concepts;
- Simplify language and wording of questions;
- Revise questions to better express the desired outcomes;
- Facilitate stronger alignment between narrative sections and the performance measures work plans. The proposed revisions do not change the estimated respondent burden.

Copies of the information collection request can be obtained by contacting the office listed in the addresses section of this Notice.

DATES: Written comments must be submitted to the individual and office

listed in the **ADDRESSES** section by February 8, 2013.

ADDRESSES: You may submit comments, identified by the title of the information collection activity, by any of the following methods:

(1) *By mail sent to:* Corporation for National and Community Service, Senior Corps, Attention: Ms. Angela Roberts, Associate Director, 9401; 1201 New York Avenue NW., Washington, DC 20525.

(2) By hand delivery or by courier to the CNCS mailroom at Room 8100 at the mail address given in paragraph (1) above, between 9:00 a.m. and 4:00 p.m. Monday through Friday, except Federal holidays.

(3) *By fax to:* (202) 606–3475, Attention: Ms. Angela Roberts, Associate Director.

(4) Electronically through *www.regulations.gov*. Individuals who use a telecommunications device for the deaf (TTY–TDD) may call (202) 606–3472 between 8:30 a.m. and 5:00 p.m. Eastern Time, Monday through Friday.

FOR FURTHER INFORMATION CONTACT: Angela Roberts by email at *aroberts@cns.gov*.

SUPPLEMENTARY INFORMATION: CNCS is particularly interested in comments that:

- Evaluate whether the proposed collection of information is necessary for the proper performance of the functions of CNCS, including whether the information will have practical utility;
- Evaluate the accuracy of the agency's estimate of the burden of the proposed collection of information, including the validity of the methodology and assumptions used;
- Enhance the quality, utility, and clarity of the information to be collected; and
- Minimize the burden of the collection of information on those who are expected to respond, including the use of appropriate automated, electronic, mechanical, or other technological collection techniques or other forms of information technology (e.g., permitting electronic submissions of responses).

Background

The Senior Corps Grant Application is completed by applicant organizations interested in sponsoring a Senior Corps program. The grant application is also used by existing grantees to apply for continuation year grants (annual submissions in years two and three of a three year grant). The grant application is completed electronically using the CNCS web-based grants management system, eGrants.

Current Action

CNCS seeks to revise the current application with modifications. The proposed revisions do not change the estimated respondent burden. The information collection will otherwise be used in the same manner as the existing application. CNCS also seeks to continue using the current application until the revised application is approved by OMB. The current application is due to expire on September 30, 2015.

Type of Review: Revision.

Agency: Corporation for National and Community Service.

Title: National Senior Service Corps Grant Application.

OMB Number: 3045–0035.

Agency Number: SF 424–NSSC.

Affected Public: Current and prospective sponsors of National Senior Service Corps Grants.

Total Respondents: 1,250.

Frequency: Annually, with exceptions.

Average Time per Response: Estimated at 16.5 hours each for 180 first-time respondents; 15 hours each for 900 continuation sponsors; 5 hours each for 270 revisions.

Estimated Total Burden Hours: 17,820 hours.

Total Burden Cost (capital/startup): None.

Total Burden Cost (operating/maintenance): None.

Comments submitted in response to this notice will be summarized and/or included in the request for Office of Management and Budget approval of the information collection request; they will also become a matter of public record.

Dated: December 3, 2012.

Erwin Tan,

Director, Senior Corps.

[FR Doc. 2012–29780 Filed 12–7–12; 8:45 am]

BILLING CODE 6050–$$–P

DEPARTMENT OF DEFENSE

Department of the Army

Transportation Workers Identification Card (TWIC) Removal for Commercial Users To Access Electronic Transportation Acquisition (ETA)

AGENCY: Department of the Army, DoD.

ACTION: Notice.

SUMMARY: To implement DoD Instruction 8520.2, dated April 1, 2004, SDDC required all commercial accounts accessing transportation systems and applications to use a commercial PKI certificate or Transportation Workers Identification Credential (TWIC). TWIC does not meet DOD security standards and cannot be used as of January 29, 2013.

DATES: *Effective date:* January 29, 2013.

ADDRESSES: Submit comments to SDDC/G6/IMA/ES, #1 Soldier Way, Scott AFB, IL 62225 ATTN: ETA Program Manager.

FOR FURTHER INFORMATION CONTACT: ETA Program Manager at *sddc.safb.etapmo@us.army.mil.* Technical questions should be addressed to the source of certificate.

SUPPLEMENTARY INFORMATION: The DoD PKI office has determined that the Transportation Workers Identification Card (TWIC) PKI certificate cannot be used to authenticate users for access to DoD systems. The DoD PKI office has not established a trust relationship with Homeland Security/TSA. Information on the TWIC can be found at *http://www.tsa.gov.*

Starting January 29, 2013, TWIC certificates cannot be accepted by ETA to access the SDDC transportation applications and USTRANSCOM Defense Personal Property System (DPS). All current TWIC holders accessing an application within ETA will need to purchase an External Certificate Authority (ECA) prior to January 29, 2013. Instructions for purchase and implementation can be found on the ETA home page, under Help, PKI Information. To view all External Approved PKI's please refer to the DISA interoperability Web site: *http://iase.disa.mil/pki-pke/interoperability/index.html.* If you have any questions, please contact ETA Program Manager at *sddc.safb.etapmo@us.army.mil.*

References: Department of Defense Instruction number 8520.2, April 1, 2004, 4.4 Joint Task Force-Global Network Operations (JTF–GNO) Communication Tasking Order (CTO) 07–015 Task 10.

Miscellaneous: DOD Instruction 8520.2 can be accessed at the following Web site: DoD Instruction 8520.2 (*http://www.cac.mil/assets/pdfs/DoDD_8520.2.pdf*).

Judith A. Beussink,

Deputy to the Commander for G6/CIO.

[FR Doc. 2012–29693 Filed 12–7–12; 8:45 am]

BILLING CODE 3710–08–P

DEPARTMENT OF DEFENSE

Department of the Army

Change to the Military Freight Carrier Registration Program (FCRP)

AGENCY: Department of the Army, DoD.

SUMMARY: The Military Surface Deployment and Distribution Command (SDDC) is providing notice that it will, effective 1 December 2012, only accept domestic motor transportation service provider (TSP) registrations during the FCRP open season which will run 1 September through 30 November each year. This will affect domestic motor TSPs only (common, contract, logistics, freight forwarders, and brokers). This does not apply to registration of air, rail, ocean, pipeline, barge, international, and household goods TSPs. This update will be included in the next release of the Military Freight Traffic Unified Rules Publication (MFTURP) NO. 1.

ADDRESSES: Submit comments to Military Surface Deployment and Distribution Command, ATTN: AMSSD–SBD–QA, 1 Soldier Way, Scott AFB, IL 62225–5006. Request for additional information may be sent by email to: *kathy.a.baker16.civ@mail.mil* or *usarmy.scott.sddc.mbx.carrier-registrations@mail.mil.*

FOR FURTHER INFORMATION CONTACT: Ms. Kathy Baker, (618) 220–6853 or (618) 220–6470.

SUPPLEMENTARY INFORMATION:

References: SDDC Docketing System, Docket Misc., 1015.

Background: SDDC reviews qualifications on all registered motor freight carriers yearly. To provide DoD customers the best available services, utilizing an open season for freight motor carrier registration, allows SDDC to perform qualification reviews of TSPs in the FCRP program.

Miscellaneous: The SDDC Docketing System can be accessed at *http://docketing.sddc.army.mil.*

Grover P. Beasley III,

Deputy Director, Strategic Business.

[FR Doc. 2012–29691 Filed 12–7–12; 8:45 am]

BILLING CODE 3710–08–P

DEPARTMENT OF DEFENSE

Department of the Army

Update to the TR–12 Fuel Related Rate Adjustment Policy (SDDC Fuel Surcharge Policy)

AGENCY: Department of the Army, DOD.

SUMMARY: FRA for freight-all-kinds (FAK) and transportation protective service (TPS) truckload (TL) shipments will be calculated using a mileage-based formula. The current percentage of line-haul formula will remain in effect for less-than-truckload (LTL) and Personal Property (PP) shipments. The percentage of line-haul increment factor will increase from $.10 to $.13. The baseline will remain at $2.50. At the discretion of SDDC, FRA may be paid for negotiated shipments based on the terms of the negotiation.

Changes to PP will become effective in 15 May 2013. The mileage-based formula and the increment change will take effect in 1 June 2013 for FAK and TPS. No changes made to DTC or PSSFC FRA effective dates.

The above changes will not apply to the Defense Transportation Coordination (DTC) contract or the Protective Security Service Freight Contract (PSSFC) for Defense Distribution Center, Warner Robins, GA (DDWG). Shipments for DTC and PSSFC DDWG will be calculated using a percentage of line haul formula with $.10 increments. DTC baseline will remain at $1.30 and PSSFC DDWG will remain at $2.50.

SDDC will not pay FRA on ''Spot Bid'' or One Time Only (OTO) personal property movements, regardless of mode. SDDC will not pay a FRA for any type of rail shipment. SDDC will not pay FRA on commercial security escort vehicles (CSEV).

ADDRESSES: Submit comments to, Strategy, Plans, Policy and Programs Division, Strategy & Analysis Division, 1 Soldier Way, Building 1900W, ATTN: SDDC–SPS, Scott AFB 62225. Request for additional information may be sent by email to: *usarmy.scott.sddc.mbx.hq-g35-strat-analysis@mail.mil.*

FOR FURTHER INFORMATION CONTACT: Isis Green, (618) 220–5078.

SUPPLEMENTARY INFORMATION:

Reference: TR–12 Fuel Related Rate Adjustment Policy.

Background: The following FRA policy applies to commercial TSP freight and personal property movements within the United States. This policy provides the transportation industry, including individual TSPs, economic adjustment and reasonable relief for unanticipated increases in diesel fuel prices.

Miscellaneous: A copy of the TR–12 FRA Policy can be accessed via the SDDC Web site at: *http://www.sddc.army.mil/GCD/default.aspx.*

This version of Policy No. TR–12 supersedes all previous versions of TR–12, except to the extent that a previous version is explicitly referenced as the basis for payment in an agreement with SDDC.

Debbie Harvey-Davis,

Division Chief, SDDC–G5, Strategy & Analysis Division.

[FR Doc. 2012–29694 Filed 12–7–12; 8:45 am]

BILLING CODE 3710–08–P

DEPARTMENT OF DEFENSE

Department of the Army; Corps of Engineers

Notice of Correction to the Notice of Intent To Prepare a Joint Environmental Impact Statement (EIS) for the Gateway Pacific Terminals Bulk Dry Goods Shipping Facility and the Custer Spur Rail Expansion Projects

AGENCY: Department of the Army, U.S. Army Corps of Engineers, DoD.

ACTION: Notice of correction.

SUMMARY: This notice corrects the date of one of the public scoping meetings listed in the Notice of Intent published in the **Federal Register** (77 FR 71405) on Friday, November 30, 2012. The Seattle public scoping meeting will be held at the Washington State Convention Center, Ballroom 6F, 800 Convention Place, Seattle, WA 98101 on Thursday, December 13, 2012, from 4:00 p.m. to 7:00 p.m.

FOR FURTHER INFORMATION CONTACT: Mr. Randel Perry via email at: *randel.j.perry@usace.army.mil,* by phone at (360) 734–3156, or by regular mail at Mr. Randel Perry, U.S. Army Corps of Engineers, Seattle District, Care of: GPT/BNSF Custer Spur EIS Co-Lead Agencies, 1100 112th Avenue Northeast, Suite 400, Bellevue, WA 98004. Additional information on scoping meetings can be found at *www.eisgatewaypacificwa.gov.*

Brenda S. Bowen,

Army Federal Register Liaison Officer.

[FR Doc. 2012–29692 Filed 12–7–12; 8:45 am]

BILLING CODE 3720–58–P

DEPARTMENT OF DEFENSE

Department of the Navy

Notice of Intent To Grant Exclusive Patent License; Fiber Optic Sensor Systems Technology Corporation

AGENCY: Department of the Navy, DoD.

ACTION: Notice.

SUMMARY: The Department of the Navy hereby gives notice of its intent to grant to Fiber Optic Sensor Systems Technology Corporation a revocable, nonassignable, exclusive license to practice the field of use of electrical power measurements for the measurement or control of temperature, pressure, strain, vibration, acceleration, and any other measurement enabled in electrical power systems, including but not limited to, substations, generating facilities, transmission lines, distribution facilities and other

electrical power infrastructure and in electrical power systems equipment, including but not limited to, generators, motors, transformers, switches, power supplies, batteries and other devices employed to generate, transform, transport, distribute or store electrical energy; the field of use microphones for the measurement of sound pressure; the field of use of monitoring and control systems used in industrial production and infrastructure monitoring and control, including particularly supervisory control systems and distributed control systems used in manufacturing, mining and utilities in the United States, the Government-owned inventions described in U.S. Patent No. 7,020,354: Intensity Modulated Fiber Optic Pressure Sensor, Navy Case No. 83,816.//U.S. Patent No. 7,149,374: Fiber Optic Pressure Sensor, Navy Case No. 84,557.//U.S. Patent No. 7,379,630: Multiplexed Fiber Optic Sensor System, Navy Case No. 97,488.// U.S. Patent No. 7,460,740: Intensity Modulated Fiber Optic Static Pressure Sensor System, Navy Case No. 97,279.// U.S. Patent No. 7,646,946: Intensity Modulated Fiber Optic Strain Sensor, Navy Case No. 97,005.//U.S. Patent No. 7,697,798: Fiber Optic Pressure Sensors and Catheters, Navy Case No. 97,569.// U.S. Patent No. 8,195,013: Miniature Fiber Optic Temperature Sensors, Navy Case No. 98,030.//U.S. Patent Application No. 12/698,646: Miniature Fiber Optic Temperature Sensors, Navy Case No. 100,134 and any continuations, divisionals or re-issues thereof.

DATES: Anyone wishing to object to the grant of this license must file written objections along with supporting evidence, if any, not later than December 26, 2012.

ADDRESSES: Written objections are to be filed with the Naval Research Laboratory, Code 1004, 4555 Overlook Avenue SW., Washington, DC 20375–5320.

FOR FURTHER INFORMATION CONTACT: Rita Manak, Head, Technology Transfer Office, NRL Code 1004, 4555 Overlook Avenue SW., Washington, DC 20375–5320, telephone 202–767–3083. Due to U.S. Postal delays, please fax 202–404–7920, email: *rita.manak@nrl.navy.mil* or use courier delivery to expedite response.

(Authority: 35 U.S.C. 207, 37 CFR Part 404.)

Dated: December 3, 2012.

C.K. Chiappetta,

Lieutenant Commander, Office of the Judge Advocate General, U.S. Navy, Federal Register Liaison Officer.

[FR Doc. 2012–29719 Filed 12–7–12; 8:45 am]

BILLING CODE 3810–FF–P

DEPARTMENT OF DEFENSE

Department of the Navy

Nominations for Membership on the Ocean Research Advisory Panel

AGENCY: Department of the Navy, DoD.

ACTION: Notice of request for nominations.

SUMMARY: The Ocean Research Advisory Panel (ORAP) is soliciting nominations for eight new members.

DATES: Nominations should be submitted no later than 5:00 p.m. EST, January 31, 2013.

ADDRESSES: Nominations should be submitted via email to CDR Stephen D. Martin, US Navy, at *stephen.d.martin@navy.mil.*

Contact Information: Office of Naval Research, 875 North Randolph Street Suite 1425, ATTN: ONR Code 322B Room 1075, Arlington, VA 22203, telephone 703–696–4395.

FOR FURTHER INFORMATION CONTACT: Dr. Joan S. Cleveland, Office of Naval Research, 875 North Randolph Street, Suite 1425, Arlington, VA 22203–1995, telephone 703–696–4532; or CDR Stephen D. Martin, telephone 703–696–4395.

SUPPLEMENTARY INFORMATION: ORAP is a statutorily mandated federal advisory committee that provides senior advice to the National Ocean Research Leadership Council (NORLC), the governing body of the National Oceanographic Partnership Program (NOPP). Under the National Ocean Policy, the National Ocean Council (NOC) Deputy-level Committee has assumed the responsibilities of the NORLC. ORAP provides independent advice and guidance to the NOC. The NOC routinely provides guidance and direction on the areas for which it seeks advice and recommendations from the ORAP. The ORAP also advises on selection of projects and allocation of funds for the NOPP.

Panel Member Duties and Responsibilities: Members of the panel represent the National Academy of Sciences, the National Academy of Engineering, the Institute of Medicine, ocean industries, state governments, academia and others, including individuals who are eminent in the fields of marine science, marine policy, or related fields, including ocean resource management. Members are appointed annually and may serve a term of four years, and are not normally compensated except for travel expenses and per diem while away from their homes in performance of services for the panel.

The panel meets for at least one two-day public meeting per year, but possibly meets three times per year, on dates agreeable by the panel members; attendance at meetings is expected. Intercessional activities not involving formal decisions or recommendations may be carried out electronically, and the panel may establish sub-panels composed of less than full membership to carry out panel duties.

Nominations: Any interested person or organization may nominate qualified individuals (including one's self) for membership on the panel. Nominated individuals should have extended expertise and experience in the field of ocean science and/or ocean resource management. Nominations should be identified by name, occupation, position, address, telephone number, email address, and a brief paragraph describing their qualifications in the context of the ORAP Charter, that can be found on-line at (*http://www.nopp.org/committees/orap/*), and ability to represent a stakeholder group. Nominations should also include a résumé or curriculum vitae.

Process and Deadline for Submitting Nominations: Submit nominations via email to CDR Stephen Martin (*stephen.d.martin@navy.mil*) no later than 5:00 p.m. EST, January 31, 2013. ORAP nomination committees under the direction of the National Ocean Council will evaluate the nominees identified by respondents to this **Federal Register** Notice and down-select to a short-list of available candidates (150% of the available open positions for consideration). These selected candidates will be required to fill-out the ''Confidential Financial Disclosure Report'' OGE form 450. This confidential form will allow Government officials to determine whether there is a statutory conflict between a person's public responsibilities and private interests and activities, or the appearance of a lack of impartiality, as defined by federal regulation. The form and additional guidance may be viewed at: (*http://www.oge.gov/Financial-Disclosure/Confidential-Financial-Disclosure-450/Confidential-Financial-Disclosure/*).

In accordance with section 7903 of title 10, United States Code, the short-

list of candidates will then be submitted for approval by the Secretaries of the Navy and Defense who are the appointing officials for their consideration. At this time, eight openings are envisioned on the Panel and the final set of nominees will seek to balance a range of geographic and sector representation and experience. Applicants must be US citizens. Successful nominees must provide detailed information required to evaluate potential conflicts of interest. Typically the time required to achieve the final appointments to the Panel is 10–12 months. Members of the Panel serve as Special Government Employees who volunteer their time but whose travel costs for Panel business is provided by the Government. The ORAP is a Federal Advisory Committee and operates under the principles of open and transparent development of advice to the government.

The selection of new panel members will be based on the nominee's qualifications to provide senior advice to the NOC; the availability of the potential panel member to fully participate in the panel meetings; absence of any conflict of interest or appearance of lack of impartiality, and lack of bias; the candidates' areas of expertise and professional qualifications; and achieving an overall balance of different perspectives, geographic representation, and expertise on the panel.

Dated: December 3, 2012.

C.K. Chiappetta,

Lieutenant Commander, Office of the Judge Advocate General, U.S. Navy, Federal Register Liaison Officer.

[FR Doc. 2012–29720 Filed 12–7–12; 8:45 am]

BILLING CODE 3810–FF–P

DEPARTMENT OF ENERGY

Office of Energy Efficiency and Renewable Energy

[Docket Number: EERE–2012–VT–0049]

Vehicle Technologies Program; Request for Information

AGENCY: Office of Energy Efficiency and Renewable Energy and Office of the General Counsel, Department of Energy.

ACTION: Request for information; request for comment.

SUMMARY: The U.S. Department of Energy (DOE) wishes to continue promoting and improving the electronic tools it makes available to assist fleets and consumers in reducing petroleum consumption in vehicles. DOE is seeking partners interested in including customized versions of the electronic tools, as well as other relevant data sets and content, on their Web sites. To facilitate this process, DOE is publishing this request for information (RFI) to solicit feedback on DOE's current Web site tools.

DATES: Written comments and information are requested by January 9, 2013.

ADDRESSES: Interested persons are encouraged to submit comments using the Federal eRulemaking Portal at *http://www.regulations.gov.* Follow the instructions for submitting comments. Alternatively, interested persons may submit comments, identified by docket number EERE–2012–VT–0049, by one of the following methods:

1. *Email: Shannon.shea@ee.doe.gov.* Include EERE–2012–VT–0049 in the subject line of the message.

2. *Mail or deliver:* Ms. Shannon Shea, U.S. Department of Energy, (EE–2G), Room 5F–034, 1000 Independence Avenue SW., Washington, DC 20585–0121, Telephone: (202) 586–8161. Please submit one signed paper original.

Instructions: All submissions received must include the agency name and docket number for this request.

Docket: For access to the docket to read background documents, or comments received, go to the Federal eRulemaking Portal at *http://www.regulations.gov.*

FOR FURTHER INFORMATION CONTACT:

Ms. Shannon Shea, U.S. Department of Energy, (EE–2G), Room 5F–034, 1000 Independence Avenue SW., Washington, DC 20585–0121, Telephone: (202) 586–8161, Email: *shannon.shea@ee.doe.gov.*

Mr. Ari Altman, U.S. Department of Energy, Office of the General Counsel, (GC–71), 1000 Independence Avenue SW., Washington, DC 20585, Telephone: (202) 287–6307, Email: *ari.altman@hq.doe.gov.*

SUPPLEMENTARY INFORMATION:

I. Authority and Background

FuelEconomy.gov is authorized under the 1975 Energy Policy and Conservation Act (Pub. L. 94–163), which required DOE to publish and distribute the annual Fuel Economy Guide to consumers. DOE established *FuelEconomy.gov* to complement the printed Guide and expand the accessibility of information to consumers. The Alternative Fuels Data Center (AFDC; *afdc.energy.gov*) was authorized by the 1988 Alternative Motor Fuels Act (Pub. L. 100–494), which contained provisions to formally establish an alternative fuels education and data resource center. Clean Cities, within the Office of Energy Efficiency and Renewable Energy's Vehicle Technologies Program, is authorized under the Energy Policy Act of 1992 (Pub. L. 102–486) and manages both *FuelEconomy.gov* and the AFDC. Under these statutes, both Web sites are authorized to make information and data available to the public. By providing a variety of tools, databases, and informational resources on fuel-efficient and alternative fuel vehicles, both Web sites help users make decisions about which transportation options are right for them.

These Web sites feature 14 interactive web tools (*afdc.energy.gov/tools*) that allow users to view and use data in a variety of ways. These tools include calculators, interactive maps, and data searches.

DOE also offers eight ''widgets'' based on the Web site functionality described above. A widget is a simplified version of a tool or Web site that provides many of the same features, but in a separate application that independent Web site operators can ''drop in'' to their Web sites with a minimal amount of web coding. For example: DOE launched the Find-A-Car widget on *FuelEconomy.gov* (*http://www.fueleconomy.gov/feg/findacar.shtml*) in September 2012. The full version of this tool allows users to search for any car from 1984 onward and compare it to any other one on fuel economy, greenhouse gas emissions, energy impact, and cost of fuel. The widget version has a simpler and more targeted purpose, allowing users to find the fuel economy of any car, also from 1984 onward. *FuelEconomy.gov* also has a ''Fuel Saving Tip of the Week'' widget, launched in May 2011. This widget is not based on a pre-existing interactive tool, but rather on *FuelEconomy.gov's* Gas Mileage Tips section. Both widgets are available at *www.fueleconomy.gov/widgets.*

DOE launched the Vehicle Cost Calculator (*www.afdc.energy.gov/calculator*) and accompanying widgets on the AFDC in October 2011. The full version of this tool allows users to provide basic information about driving habits to compare emissions and lifetime operating costs of specific vehicle models, including conventional cars and trucks, as well as vehicles running on alternative fuels such as electricity, ethanol, natural gas, or biodiesel. This tool has a basic widget version, which allows users to select a representative alternative fuel vehicle (not a specific model, as in the full version) and compare its fuel cost and emissions to a similar conventional vehicle. This tool also has four specialty

widgets that each focus on a specific type of alternative fuel vehicle (biodiesel, compressed natural gas, E85, and electric drive).

Finally, DOE launched the Alternative Fueling Station Locator widget on the AFDC in August 2012. The full tool allows users to obtain addresses, maps, and driving directions for charging and alternative fueling stations near a particular address. The widget version allows users to embed a specific section of the locator map on their Web site, so that they can highlight a particular geographic area or a particular fuel.

Working with outside partners to modify and distribute both these tools and their accompanying widgets will expose this information to a larger pool of users and help consumers find it on Web sites that they already frequent.

II. Public Participation

A. Submission of Comments

DOE will accept comments in response to this RFI under the timeline provided in the **DATES** section above. Comments submitted to the Department through the eRulemaking Portal or by email should be provided in WordPerfect, Microsoft Word, PDF, or text file format. Those responding should avoid the use of special characters or any form of encryption, and wherever possible, comments should include the electronic signature of the author. Comments submitted to the Department by mail or hand delivery/courier should include one signed original paper copy. No telefacsimiles will be accepted.

The Department encourages interested parties to contact DOE if they would like to meet in person to discuss their comments. The Department's policy governing ex parte communications is posted on the Office of the General Counsel's Web site at: *http://www.gc.energy.gov/1309.htm.*

Confidential Business Information. According to 10 CFR 1004.11, any person submitting information that he or she believes to be confidential and exempt by law from public disclosure should submit via email, postal mail, or hand delivery two well-marked copies: one copy of the document marked confidential including all the information believed to be confidential, and one copy of the document marked non-confidential with the information believed to be confidential deleted. Submit these documents via email or on a CD, if feasible. DOE will make its own determination about the confidential status of the information and treat it according to its determination.

Factors of interest to DOE when evaluating requests to treat submitted information as confidential include: (1) A description of the items; (2) whether and why such items are customarily treated as confidential within the industry; (3) whether the information is generally known by or available from other sources; (4) whether the information has previously been made available to others without obligation concerning its confidentiality; (5) an explanation of the competitive injury to the submitting person that would result from public disclosure; (6) when such information might lose its confidential character due to the passage of time; and (7) why disclosure of the information would be contrary to the public interest.

It is DOE's policy that all comments may be included in the public docket, without change and as received, including any personal information provided in the comments (except information deemed to be exempt from public disclosure).

B. Issues on Which DOE Seeks Information

Although DOE welcomes comments on any aspect of this request for information, DOE is particularly interested in receiving comments and views of interested parties concerning the availability of DOE's transportation-oriented electronic tools, as well as the potential to partner with Internet information providers, as set forth below.

(1) Current Electronic Tools and Content

DOE would like to expand the reach of its current electronic tools designed to reduce petroleum use in transportation. The Vehicle Cost Calculator and the Alternative Fueling Station Locator on the AFDC, as well as the Find-A-Car tool and Gas Saving Tips on *FuelEconomy.gov,* are all currently available in ''widget'' form. Are the full tools currently available useful? Are the widget versions of these tools useful? Are there other existing tools on the AFDC or *FuelEconomy.gov* that your company would like available as widgets? Would your company embed the current widgets on its Web site? Why or why not? Are there other types of content on the AFDC and *FuelEconomy.gov* sites besides the current electronic tools that Web site operators would like to use?

(2) Interest in Partnering on Electronic Tool Customization

While any independent Web site can use the tools in widget form, DOE is interested in partnering with major Web sites that provide information on vehicles to consumers and fleet managers to offer customized versions of these widgets. Ideal candidates are entities whose users, stakeholders, or members look to them for information about vehicle purchases. The primary objective of the effort is to pair the capabilities of interested entities with DOE's electronic tools to provide additional value to partner Web sites, and in turn, more value and education about transportation options to end users. DOE seeks to identify entities with whom to collaborate on this effort. Note that DOE is not offering funding related to this request. What companies would be interested in such a collaboration? What services do they currently offer to users and how would these widgets complement those services? What is the membership or user base of these existing Web sites? What types of customization would these Web sites want for the widgets described previously?

Issued in Washington, DC, on November 19, 2012.

Patrick B. Davis,

Program Manager, Vehicle Technologies Program, Energy Efficiency and Renewable Energy.

[FR Doc. 2012–29759 Filed 12–7–12; 8:45 am]

BILLING CODE 6450–01–P

ENVIRONMENTAL PROTECTION AGENCY

[FRL–9759–4]

California State Motor Vehicle Pollution Control Standards; Notice of Waiver of Clean Air Act Preemption; California's 2010 Model Year Heavy-Duty Vehicle and Engine On-Board Diagnostic Standards

AGENCY: Environmental Protection Agency (EPA).

ACTION: Notice of decision.

SUMMARY: EPA has granted the California Air Resources Board (CARB) its request to confirm that its amendments to California's heavy-duty vehicle and engine on-board diagnostic (HD OBD) requirements that relax the standards for 2010–2012 model years (MYs) are within the scope of a previous waiver of preemption of the Clean Air Act (Act). The amendments to the HD OBD requirements for MY 2013 and later are granted a new waiver of preemption.

ADDRESSES: EPA has established a docket for this action under Docket ID EPA–HQ–OAR–2011–0816. All documents relied upon in making this decision, including those submitted to

EPA by CARB, are contained in the public docket. Publicly available docket materials are available either electronically through *www.regulations.gov* or in hard copy at the Air and Radiation docket in the EPA Headquarters Library, EPA West Building, Room 3334, located at 1301 Constitution Avenue NW., Washington, DC. The Public Reading Room is open to the public on all federal government working days from 8:30 a.m. to 4:30 p.m.; generally it is open Monday through Friday, excluding holidays. The telephone number for the Reading room is (202) 566–1744. The Air and Radiation Docket and Information Center's Web site is *http://www.epa.gov/oar/docket.html.* The electronic mail (email) address for the Air and Radiation Docket is: *a-and-r-Docket@epa.gov,* the telephone number is (202) 566–1742, and the fax number is (202) 566–9744. An electronic version of the public docket is available through the federal government's electronic public docket and comment system. You may access EPA dockets at *http://www.regulations.gov.* After opening the *www.regulations.gov* Web site, enter EPA–HQ–OAR–2011–0816 in the ''Enter Keyword or ID'' fill-in box to view documents in the record. Although a part of the official docket, the public docket does not include Confidential Business Information (''CBI'') or other information whose disclosure is restricted by statute.

EPA's Office of Transportation and Air Quality (''OTAQ'') maintains a Web page that contains general information on its review of California waiver requests. Included on that page are links to prior waiver **Federal Register** notices, some of which are cited in today's notice; the page can be accessed at *http://www.epa.gov/otaq/cafr.htm.*

FOR FURTHER INFORMATION CONTACT: David Dickinson, Compliance Division, U.S. Environmental Protection Agency, Ariel Rios Building (6405J), 1200 Pennsylvania Avenue NW., Washington, DC 20460. Telephone: (202) 343–9256. EMail Address: *Dickinson.David@EPA.GOV.*

SUPPLEMENTARY INFORMATION: I confirm that the amendments to California's HD OBD requirements that relax the requirements for the 2010–2012 MYs are within the scope of a previous waiver of Clean Air Act preemption. I am also granting a new waiver of Clean Air Act preemption for the amendments to California's HD OBD requirements that create more stringent requirements for MYs 2013 and later pursuant to section 209(b) of the Act.[1]

Section 209(b) of the Act provides that, if certain criteria are met, the Administrator shall waive preemption for California to enforce new motor vehicle emissions standards and accompanying enforcement procedures. The criteria include consideration of whether California arbitrarily and capriciously determined that its standards are, in the aggregate, at least as protective of public health and welfare as the applicable Federal standards, whether California needs State standards to meet compelling and extraordinary conditions, and whether the standards are consistent with section 202(a) of the Act.

If California acts to amend a previously waived standard or accompanying enforcement procedure, the amendment may be considered within the scope of the previously granted waiver, provided that it doesn't undermine California's determination that its standards, in the aggregate, are at least as protective of public health and welfare as the applicable Federal standards, does not affect its consistency with section 202(a) of the Act, and raises no new issues affecting EPA's previous waiver decisions.

In its request letter to EPA, CARB asked EPA to confirm that the HD OBD amendments that relax the requirements for the 2010–2012 MYs are within the scope of an earlier waiver. CARB stated that these amendments will not cause the California standards, in the aggregate, to be less protective of public health and welfare than the applicable Federal standards. EPA received no information during this proceeding that questioned whether CARB's HD OBD requirements are less protective than applicable Federal standards. Therefore, I cannot find that CARB's HD OBD regulations would cause the California motor vehicle emissions standards, in the aggregate, to be less protective of public health and welfare than applicable Federal standards.

CARB stated in its request letters that the amendments do not raise any concerns of technological infeasibility, inadequate lead-time or imposition of any inconsistent certification requirements. Because EPA has not received any adverse public comment, or any other relevant information on this issue, I cannot find that CARB's HD OBD regulations, as noted, would cause the California motor vehicle emission standards to be inconsistent with section 202(a).

EPA has received no comments on whether the amendments to California's HD OBD regulations that relax the requirements for the 2010–2012 MYs raise any new issues. Therefore, I find that these particular amendments do not raise any new issues.

Given the above, EPA can confirm that the amendments that relax the requirements for the 2010–2012 MYs are within the scope of the previous waiver of preemption.

In its request letter to EPA, CARB also asked EPA to confirm that the HD OBD amendments for MYs 2013 and later are within the scope of an earlier waiver. EPA cannot confirm that the amendments to California's HD OBD requirements that create new, more stringent standards for 2013 and later model year engines, and the new enforcement procedures are within the scope of the previous waiver of preemption. EPA has stated in prior waiver and authorization determinations that increases in the stringency of standards are ''new issues'' for which full waiver or authorization is required.[2] Because the amendments for MY 2013 and later increase the stringency of the standards, they are not within the scope of the previous waiver, and must be evaluated under the standards for a full waiver of preemption.

In its request letter to EPA, CARB asked EPA, in the alternative, to grant a full waiver of preemption for the amendments that create new, more stringent requirements for 2013 and later MYs, and the accompanying enforcement procedures. Therefore, EPA has applied the traditional, full waiver analysis to these particular amendments.

CARB stated in its request that the HD OBD regulations, as amended, are at least as protective of public health and safety as the comparable Federal standards. EPA has not received any information suggesting that the new standards are any less protective of public health and safety as the comparable Federal standards. Therefore, I cannot find that CARB acted arbitrarily and capriciously in determining that its OBD regulations would not cause the California motor vehicle emission standards, in the aggregate, to be less protective of public health and welfare than applicable Federal standards.

[1] The CARB Board approved the OBD amendments by Resolution 09–37 on May 28, 2009 and the California Office of Administrative Law approved the regulations on May 18, 2010.

[2] *See, e.g.,* 71 FR 44027 at 44028 (August 3, 2006)(''EPA believed it possible that CARB's amendments do in fact raise 'new issues' as they impose new more stringent standards * * *'').

CARB has repeatedly demonstrated the existence of compelling and extraordinary conditions in California. EPA has not received any adverse comments to suggest that California no longer suffers from compelling and extraordinary conditions. Because EPA has not received adverse public comment, or any other relevant information, challenging the need for CARB's own motor vehicle pollution control program based on lack of compelling and extraordinary conditions for the purposes of this waiver request, I cannot deny the waiver based on a lack of compelling and extraordinary conditions.

CARB stated in its request letter that the amendments and accompanying enforcement procedures do not raise any concerns of technological infeasibility, inadequate lead time or impose any inconsistent certification requirements. Because EPA has not received adverse public comment, or any other relevant information regarding the consistency of California's HD OBD amendments with section 202(a) of the Clean Air Act, I cannot find that CARB's HD OBD regulations, as noted, would cause the California motor vehicle emissions standards to be inconsistent with section 202(a).

Therefore, as to the amendments that create new, more stringent requirements for the 2013 and later MYs, and the new enforcement procedures, there is insufficient basis to deny a full waiver of preemption under the criteria set forth in section 209(b) of the Act.

A full explanation of EPA's decision is contained in a Decision Document which may be obtained as explained above.

The Administrator has delegated the authority to grant California section 209(b) waivers of preemption to the Assistant Administrator for Air and Radiation. After evaluating California's HD OBD amendments and CARB's submissions, EPA is taking the following actions. First, EPA is confirming that the amendments that relax the HD OBD requirements for 2010–2012 MYs are within the scope of the previous waiver of preemption. Second, EPA is granting a new waiver of preemption for the amendments to the HD OBD regulations that create new, more stringent requirements for MY 2013 and later, along with the accompanying enforcement procedures.

My decision will affect not only persons in California but also the manufacturers outside the State who must comply with California's requirements in order to produce heavy-duty vehicles and engines for sale in California. For this reason, I hereby determine and find that this is a final action of national applicability for the purposes of section 307(b)(1) of the Act. Pursuant to section 307(b)(1) of the Act, judicial review of this final action may be sought only in the United States Court of Appeals for the District of Columbia Circuit. Petitions for review must be filed by February 8, 2013. Judicial review of this action may not be obtained in subsequent enforcement proceedings, pursuant to section 307(b)(2) of the Act.

As with past waiver decisions, this action is not a rule as defined by Executive Order 12866. Therefore, it is exempt from review by the Office of Management and Budget as required for rules and regulations by Executive Order 12866.

In addition, this action is not a rule as defined in the Regulatory Flexibility Act, 5 U.S.C. 601(2). Therefore, EPA has not prepared a supporting regulatory flexibility analysis addressing the impact of this action on small business entities.

Further, the Congressional Review Act, 5 U.S.C. 801, *et seq.,* as added by the Small Business Regulatory Enforcement Fairness Act of 1996, does not apply because this action is not a rule for the purposes of 5 U.S.C. 804(3).

Dated: November 29, 2012.

Gina McCarthy,

Assistant Administrator, Office of Air and Radiation.

[FR Doc. 2012–29792 Filed 12–7–12; 8:45 am]

BILLING CODE 6560–50–P

FEDERAL COMMUNICATIONS COMMISSION

[MB Docket Nos. 09–182 and 07–294; DA 12–1946]

Commission Seeks Comment on Broadcast Ownership Report

AGENCY: Federal Communications Commission.

ACTION: Notice; solicitation of comments.

SUMMARY: This document solicits comment on data contained in the Media Bureau's recently released report on the ownership of commercial broadcast stations, which provides detailed information by race, ethnicity, and gender concerning ownership of commercial television, radio, Class A television, and low-power television stations.

DATES: Comments may be filed on or before December 26, 2012, and reply comments may be filed on or before January 4, 2013.

ADDRESSES: Federal Communications Commission, 445 12th Street SW., Washington, DC 20554.

FOR FURTHER INFORMATION CONTACT: Hillary DeNigro, Industry Analysis Division, Media Bureau, FCC, (202) 418–2330.

SUPPLEMENTARY INFORMATION: This is a synopsis of the Commission's Public Notice in MB Docket Nos. 09–182, 07–294, DA 12–1946, released December 3, 2012. The complete text of the document is available for inspection and copying during normal business hours in the FCC Reference Center, 445 12th Street SW., Washington, DC 20554, and may also be purchased from the Commission's copy contractor, BCPI, Inc., Portals II, 445 12th Street SW., Washington, DC 20054. Customers may contact BCPI, Inc. at their Web site *http://www.bcpi.com* or call 1–800–378–3160.

Synopsis of the Public Notice

1. The Public Notice offers an opportunity for additional comment on data contained in the Media Bureau's recently released report on the ownership of commercial broadcast stations (''Ownership Report''). The Ownership Report provides detailed information by race, ethnicity, and gender concerning ownership of commercial television, radio, Class A television, and low-power television stations.

2. As the Commission has long recognized, minorities and women own broadcast stations in disproportionately small numbers. This fact has been well established in our media ownership docket, including in the 2009 biennial ownership data detailed in the *NPRM* prior to the release of the final Ownership Report. The recently released Ownership Report confirms that minority and female ownership numbers remain low and provides more detailed ownership figures. These data are part of the record and have been considered in our current quadrennial review and, along with additional data gathered in subsequent biennial filings, will be considered in our succeeding quadrennial reviews.

3. The Ownership Report represents the latest step in the Commission's ongoing efforts to collect and publicly release minority and female ownership data. As explained in the *NPRM*, the Commission has sought actively in recent years to improve its collection and analysis of broadcast ownership information. These initiatives include improvements to the reliability and utility of the data reported in FCC Form 323. Although refinements to the

collection and assessment of these data are ongoing, the recently released Ownership Report signifies a substantial improvement in minority and female ownership data. We anticipate going forward that these and additional ownership reports will provide useful periodic ''snapshots'' of minority and female ownership in the broadcast industry. We expect that our continuing efforts to reform and refine our ownership data collection will yield more and better data to support trend analyses in the future.

4. The Ownership Report was released to the public on November 14, 2012 and parties have submitted material in the record concerning the data. Several parties have requested an additional, formal opportunity to comment on the Ownership Report. Thus, while this proceeding has provided numerous opportunities for public input and participation, we will establish a further comment cycle for this limited purpose. Comments are due December 26, 2012; reply comments are due January 4, 2013.

Procedural Matters

5. *Ex Parte Rules.* This proceeding will be treated as ''permit but disclose'' for purposes of the Commission's *ex parte* rules.[1] As a result of the permit-but-disclose status of this proceeding, *ex parte* presentations will be governed by the procedures set forth in Section 1.1206 of the Commission's rules applicable to non-restricted proceedings.[2] Persons making *ex parte* presentations must file a copy of any written presentation or a memorandum summarizing any oral presentation within two business days after the presentation (unless a different deadline applicable to the Sunshine period applies).

6. Persons making oral *ex parte* presentations are reminded that memoranda summarizing the presentation must (1) list all persons attending or otherwise participating in the meeting at which the *ex parte* presentation was made, and (2) summarize all data presented and arguments made during the presentation. If the presentation consisted in whole or in part of the presentation of data or arguments already reflected in the presenter's written comments, memoranda or other filings in the proceeding, the presenter may provide citations to such data or arguments in his or her prior comments, memoranda, or other filings (specifying the relevant page and/or paragraph numbers where such data or arguments can be found) in lieu of summarizing them in the memorandum. Documents shown or given to Commission staff during *ex parte* meetings are deemed to be written *ex parte* presentations and must be filed consistent with rule 1.1206(b). Written *ex parte* presentations and memoranda summarizing oral *ex parte* presentations, and all attachments thereto, must be filed through the electronic comment filing system available for that proceeding, and must be filed in their native format (*e.g.*, .doc, .xml, .ppt, searchable .pdf). Participants in this proceeding should familiarize themselves with the Commission's *ex parte* rules.

7. *Comment Information.* Pursuant to sections 1.415 and 1.419 of the Commission's rules, 47 CFR 1.415, 1.419, interested parties may file comments and reply comments on or before the dates indicated on the first page of this document. Comments may be filed using the Commission's Electronic Comment Filing System (ECFS). *See Electronic Filing of Documents in Rulemaking Proceedings*, 63 FR 24121 (1998).

- Electronic Filers: Comments may be filed electronically using the Internet by accessing the ECFS: *http://fjallfoss.fcc.gov/ecfs2/.*
- Paper Filers: Parties who choose to file by paper must file an original and one copy of each filing. If more than one docket or rulemaking number appears in the caption of this proceeding, filers must submit two additional copies for each additional docket or rulemaking number.

Filings can be sent by hand or messenger delivery, by commercial overnight courier, or by first-class or overnight U.S. Postal Service mail. All filings must be addressed to the Commission's Secretary, Office of the Secretary, Federal Communications Commission.

- All hand-delivered or messenger-delivered paper filings for the Commission's Secretary must be delivered to FCC Headquarters at 445 12th St. SW., Room TW–A325, Washington, DC 20554. The filing hours are 8:00 a.m. to 7:00 p.m. All hand deliveries must be held together with rubber bands or fasteners. Any envelopes and boxes must be disposed of before entering the building.
- Commercial overnight mail (other than U.S. Postal Service Express Mail and Priority Mail) must be sent to 9300 East Hampton Drive, Capitol Heights, MD 20743.
- U.S. Postal Service first-class, Express, and Priority mail must be addressed to 445 12th Street SW., Washington DC 20554.

People with Disabilities: To request materials in accessible formats for people with disabilities (braille, large print, electronic files, audio format), send an email to *fcc504@fcc.gov* or call the Consumer & Governmental Affairs Bureau at 202–418–0530 (voice), 202–418–0432 (tty).

Federal Communications Commission.

Robert Ratcliffe,

Deputy Bureau Chief, Media Bureau.

[FR Doc. 2012–29768 Filed 12–7–12; 8:45 am]

BILLING CODE 6712–01–P

FEDERAL COMMUNICATIONS COMMISSION

Sunshine Act Meeting FCC To Hold Open Commission Meeting Wednesday, December 12, 2012

December 5, 2012.

The Federal Communications Commission will hold an Open Meeting on the subjects listed below on Wednesday, December 12, 2012. The meeting is scheduled to commence at 1:00 p.m. in Room TW–C305, at 445 12th Street SW., Washington, DC. The Commission is waiving the sunshine period prohibition contained in Section 1.1203 of the Commission's rules, 47 CFR 1.1203, until 5:00 p.m. on Thursday, December 6, 2012. Thus, presentations with respect to the items listed below will be permitted until that time.

Item No.	Bureau	Subject
1	Wireless Telecommunications, International and Office of Engineering & Technology.	*Title:* Amendment of the Commission's Rules with Regard to Commercial Operations in the 3550–3650 MHz Band.

[1] 47 CFR 1.1200, 1.1206.

[2] 47 CFR 1.1206.

Item No.	Bureau	Subject
		Summary: The Commission will consider a Notice of Proposed Rulemaking to broaden its initiatives in unleashing broadband spectrum, promoting technological innovation, and encouraging investment via the creation of a shared access broadband service in the 3550–3650 MHz band for small cell use.
2	Public Safety & Homeland Security.	*Title:* Facilitating the Development of Text-to-911 and Other Next Generation 911 Applications (PS Docket No. 11–153) and Framework for Next Generation 911 Deployment (PS Docket No. 10–255). *Summary:* The Commission will consider an item on developing the capability for Americans to contact 911 emergency services via text messaging, and providing automatic consumer notification where text to 911 is not supported.
3	Wireline Competition	*Title:* Rural Health Care Support Mechanism (WC Docket No. 02–60). *Summary:* The Commission will consider a Report and Order on reforming the FCC's universal service support programs for healthcare that would expand healthcare providers' access to broadband, especially in rural areas, while increasing overall efficiency and accountability in the programs.
4	Wireless Telecommunications	*Title:* Service Rules for Advanced Wireless Services in the 2000–2020 MHz and 2180–2200 MHz Bands (WT Docket No. 12–70); Fixed and Mobile Services in the Mobile Satellite Service Bands at 1525–1559 MHz and 1626.5–1660.5 MHz, 1610–1626.5 MHz and 2483.5–2500 MHz, and 2000–2020 MHz and 2180–2200 MHz (ET Docket No. 10–142); and Service Rules for Advanced Wireless Services in the 1915–1920 MHz, 1995–2000 MHz, 2020–2025 MHz and 2175–2180 MHz Bands (WT Docket No. 04–356). *Summary:* The Commission will consider a Report and Order and Order of Proposed Modification to increase the Nation's supply of spectrum for mobile broadband by adopting service rules for 40 megahertz of spectrum in the 2 GHz band (2000–2020 MHz and 2180–2200 MHz).
5	Wireless Telecommunications	*Title:* Service Rules for the Advanced Wireless Services H Block—Implementing Section 6401 of the Middle Class Tax Relief and Job Creation Act of 2012 Related to the 1915–1920 MHz and 1995–2000 MHz bands. *Summary:* The Commission will consider a Notice of Proposed Rulemaking that would implement the Congressional directive in the Middle Class Tax Relief and Job Creation Act of 2012 to grant new initial licenses for the 1915–1920 MHz and the 1995–2000 MHz bands through a system of competitive bidding.

The meeting site is fully accessible to people using wheelchairs or other mobility aids. Sign language interpreters, open captioning, and assistive listening devices will be provided on site. Other reasonable accommodations for people with disabilities are available upon request. In your request, include a description of the accommodation you will need and a way we can contact you if we need more information. Last minute requests will be accepted, but may be impossible to fill. Send an email to: *fcc504@fcc.gov* or call the Consumer & Governmental Affairs Bureau at 202–418–0530 (voice), 202–418–0432 (tty).

Additional information concerning this meeting may be obtained from Meribeth McCarrick, Office of Media Relations, (202) 418–0500; TTY 1–888–835–5322. Audio/Video coverage of the meeting will be broadcast live with open captioning over the Internet from the FCC Live Web page at *www.fcc.gov/live*.

For a fee this meeting can be viewed live over George Mason University's Capitol Connection. The Capitol Connection also will carry the meeting live via the Internet. To purchase these services call (703) 993–3100 or go to *www.capitolconnection.gmu.edu*.

Copies of materials adopted at this meeting can be purchased from the FCC's duplicating contractor, Best Copy and Printing, Inc. (202) 488–5300; Fax (202) 488–5563; TTY (202) 488–5562. These copies are available in paper format and alternative media, including large print/type; digital disk; and audio and video tape. Best Copy and Printing, Inc. may be reached by email at *FCC@BCPIWEB.com*.

Federal Communications Commission.

Marlene H. Dortch,

Secretary.

[FR Doc. 2012–29874 Filed 12–6–12; 4:15 pm]

BILLING CODE 6712–01–P

FEDERAL DEPOSIT INSURANCE CORPORATION

Sunshine Act Meetings

Pursuant to the provisions of the ''Government in the Sunshine Act'' (5 U.S.C. 552b), notice is hereby given that the Federal Deposit Insurance Corporation's Board of Directors will meet in open session at 10:00 a.m. on Tuesday, December 11, 2012, to consider the following matters:

Summary Agenda: No substantive discussion of the following items is anticipated. These matters will be resolved with a single vote unless a member of the Board of Directors requests that an item be moved to the discussion agenda.

Disposition of minutes of previous Board of Directors' Meetings.

Summary reports, status reports, reports of the Office of Inspector General, and reports of actions taken pursuant to authority delegated by the Board of Directors.

Memorandum and resolution re: Amendments to the Statement of Policy for Section 19 of the Federal Deposit Insurance Act.

Memorandum and resolution re: Quadrennial Civil Penalty Inflation Adjustment Final Rule.

Memorandum and resolution re: Request for Approval of the Corporate Investment Policy.

Memorandum and resolution re: Request for Authority to Publish a Privacy Act Notice in the **Federal Register** to Delete a System of Records.

Memorandum and resolution re: Recommendation for Designated Reserve Ratio for 2013.

Discussion Agenda:

Memorandum and resolution re: 2013 Corporate Operating Budget.

The meeting will be held in the Board Room on the sixth floor of the FDIC Building located at 550 17th Street NW., Washington, DC.

This Board meeting will be Web cast live via the Internet and subsequently made available on-demand approximately one week after the event. Visit *http://www.vodium.com/goto/fdic/boardmeetings.asp* to view the event. If you need any technical assistance, please visit our Video Help page at: *http://www.fdic.gov/video.html.*

The FDIC will provide attendees with auxiliary aids (e.g., sign language interpretation) required for this meeting. Those attendees needing such assistance should call 703–562–2404 (Voice) or 703–649–4354 (Video Phone) to make necessary arrangements.

Requests for further information concerning the meeting may be directed to Mr. Robert E. Feldman, Executive Secretary of the Corporation, at 202–898–7043.

Dated: December 4, 2012.

Federal Deposit Insurance Corporation.

Robert E. Feldman,

Executive Secretary.

[FR Doc. 2012–29840 Filed 12–6–12; 4:15 pm]

BILLING CODE P

FEDERAL HOUSING FINANCE AGENCY

[No. 2012–N–18]

Privacy Act of 1974; System of Records

AGENCY: Federal Housing Finance Agency.

ACTION: Notice of proposed establishment of new system of records; Request for comments.

SUMMARY: In accordance with the requirements of the Privacy Act of 1974, as amended, 5 U.S.C. 552a (Privacy Act), the Federal Housing Finance Agency (FHFA) gives notice of and requests comments on the establishment of one new system of records. The proposed new system of records is ''National Mortgage Database'' (FHFA–21).

DATES: The effective date of the notice is January 22, 2013 unless comments necessitate otherwise. FHFA will publish a new notice if, in order to review comments, the effective date is delayed or if changes are made based on comments received. To be assured of consideration, comments must be received on or before January 9, 2013.

ADDRESSES: Submit comments, identified by ''2012–N–18,'' using only one of the following methods:

- Email: Comments to Alfred M. Pollard, General Counsel, may be sent by email to *RegComments@fhfa.gov.* Please include ''2012–N–18'' in the subject line of the message.
- Federal eRulemaking Portal: *http://www.regulations.gov.* Follow the instructions for submitting comments. If you submit your comment to the Federal eRulemaking Portal, please also send it by email to FHFA at *RegComments@fhfa.gov* to ensure timely receipt by FHFA. Please include ''2012–N–18'' in the subject line of the message.
- U.S. Mail, United Parcel Service, Federal Express, or Other Mail Service: The mailing address for comments is: Alfred M. Pollard, General Counsel, Attention: Comments/2012–N–18, Federal Housing Finance Agency, 400 Seventh Street SW., Washington, DC 20024. Please note that all mail sent to FHFA via the U.S. Postal Service is routed through a national irradiation facility, a process that may delay delivery by approximately two weeks. For any time-sensitive correspondence, please plan accordingly.
- Hand Delivered/Courier: The hand delivery address is: Alfred M. Pollard, General Counsel, Attention: Comments/2012–N–18, Federal Housing Finance Agency, 400 Seventh Street SW., Washington, DC 20024. To ensure timely receipt of hand delivered package, please ensure that the package is delivered to the Seventh Street entrance Guard Desk, First Floor, on business days between 9 a.m. to 5 p.m.

See **SUPPLEMENTARY INFORMATION** for additional information on submission and posting of comments.

FOR FURTHER INFORMATION CONTACT: Stacy Easter, Privacy Act Officer, *privacy@fhfa.gov* or 202–649–3803, or David A. Lee, Senior Agency Official for Privacy, *privacy@fhfa.gov* or 202–649–3803 (not toll-free numbers), Federal Housing Finance Agency, Eighth Floor, 400 Seventh Street SW., Washington, DC 20024. The telephone number for the Telecommunications Device for the Deaf is 800–877–8339.

SUPPLEMENTARY INFORMATION:

I. Comments

FHFA seeks public comments on the proposed system of records, and will take all comments into consideration. *See* 5 U.S.C. 552a(e)(4) and (11). In addition to referencing ''Comments/2012–N–18,'' please reference ''National Mortgage Database'' (FHFA–21).

All comments received will be posted without change on the FHFA Web site at *http://www.fhfa.gov,* and will include any personal information provided, such as name, address (mailing and email), and telephone numbers. In addition, copies of all comments received will be available without change for public inspection on business days between the hours of 10 a.m. and 3 p.m., at the Federal Housing Finance Agency, 400 Seventh Street SW., Washington, DC 20024. To make an appointment to inspect comments, please call the Office of General Counsel at 202–649–3804.

II. Introduction

This notice satisfies the Privacy Act requirement that an agency publish a system of records notice in the **Federal Register** when there is an addition or change to the agency's systems of records. Congress has recognized that application of all requirements of the Privacy Act to certain categories of records may have an undesirable and often unacceptable effect upon agencies in the conduct of necessary public business. Consequently, Congress established general exemptions and specific exemptions that could be used to exempt records from provisions of the Privacy Act. Congress also required that exempting records from provisions of the Privacy Act would require the head of an agency to publish a determination to exempt a record from the Privacy Act as a rule in accordance with the Administrative Procedure Act. The Acting Director of FHFA has determined that records and information in this system of records are not exempt from the requirements of the Privacy Act.

As required by the Privacy Act, 5 U.S.C. 552a(r), and pursuant to paragraph 4c of Appendix I to OMB Circular No. A–130, ''Federal Agency Responsibilities for Maintaining Records About Individuals,'' dated February 8, 1996 (61 FR 6427, 6435 February 20, 1996), FHFA has submitted a report describing the one system of records covered by this notice to the Committee on Oversight and Government Reform of the House of Representatives, the Committee on Homeland Security and Governmental Affairs of the Senate, and the Office of Management and Budget.

III. Proposed System of Records

The new proposed system, ''National Mortgage Database'' (FHFA–21), will contain records related to loan-level information on first lien single-family mortgages.

The proposed system of records notice is set out in its entirety and described in detail below.

FHFA–21

SYSTEM NAME:

National Mortgage Database.

SECURITY CLASSIFICATION:

Sensitive but unclassified.

SYSTEM LOCATION:

Federal Housing Finance Agency, 400 Seventh Street SW., Washington, DC 20024, and any alternate work site utilized by employees of the Federal Housing Finance Agency (FHFA) or by individuals assisting such employees.

CATEGORIES OF INDIVIDUALS COVERED BY THE SYSTEM:

Individuals who have records in one or more credit bureaus, consumer reporting agencies, other Federal government systems of records, commercial data aggregators, or other commercial entities.

CATEGORIES OF RECORDS IN THE SYSTEM:

Records include loan-level information on first lien single-family mortgages, including but not limited to the following data fields:

Mortgage Data:

1. Sales price of home (or appraised value if a refinance)
2. Amount of down payment (zero if a refinance)
3. Mortgage insurance (e.g., yes/no)
4. Date of origination
5. Amount
6. Interest rate
7. Term to maturity
8. Type (e.g., FRM, ARM, etc.)
9. Product (e.g., conventional, FHA, VA, USDA RD, etc.)
10. Was a second mortgage obtained at origination of the first mortgage?
11. Purpose of loan

Property Characteristics:

1. How occupied (e.g., rental, primary residence, etc.)
2. Type of home (e.g., single-family detached, townhouse, condo, manufactured home, etc.)
3. Number of units financed by the mortgage
4. New or existing property

Household Characteristics:

1. Adult composition of household (e.g., single male, married couple, etc.)
2. Age of borrower(s)
3. Total household income
4. Number of adult wage earners in household
5. Gender of borrower(s)
6. Metric of credit worthiness of borrower(s)
7. Debt-to-income ratio of borrower(s)
8. Education of borrower(s)
9. Ethnicity of borrower(s)

AUTHORITY FOR MAINTENANCE OF THE SYSTEM:

12 U.S.C. 4544.

PURPOSE(S):

The records in this system of records are maintained in order to facilitate mandatory reporting as well as to conduct research, performance modeling, and examination monitoring.

ROUTINE USES OF RECORDS MAINTAINED IN THE SYSTEM, INCLUDING CATEGORIES OF USERS AND THE PURPOSES OF SUCH USES:

In addition to those disclosures generally permitted under 5 U.S.C. 552a(b) of the Privacy Act, these records or information contained therein may specifically be disclosed outside FHFA as a routine use pursuant to 5 U.S.C. 552a(b)(3) as follows:

(1) When (a) it is suspected or confirmed that the security or confidentiality of information in the system of records has been compromised; (b) FHFA has determined that as a result of the suspected or confirmed compromise there is a risk of harm to economic or property interests, identity theft or fraud, or harm to the security or integrity of this system or other systems or programs (whether maintained by FHFA or another agency or entity) that rely upon the compromised information; and (c) the disclosure is made to such agencies, entities, and persons who are reasonably necessary to assist in connection with FHFA's efforts to respond to the suspected or confirmed compromise and prevent, minimize, or remedy such harm.

(2) Where there is an indication of a violation or potential violation of law, whether civil, criminal or regulatory in nature, and whether arising by general statute or particular program statute, or by regulation, rule or order issued pursuant thereto, the relevant records in the system of records may be referred, as a routine use, to the appropriate agency, whether federal, state, local, tribal, foreign or a financial regulatory organization, including the Financial Crimes Enforcement Network and other law enforcement and government entities, as determined by FHFA to be appropriate and that are charged with the responsibility of investigating or prosecuting such violation or charged with enforcing or implementing a statute, or rule, regulation or order issued pursuant thereto.

(3) To any individual during the course of any inquiry or investigation conducted by FHFA, or in connection with civil litigation, if FHFA has reason to believe that the individual to whom the record is disclosed may have further information about the matters related therein, and those matters appeared to be relevant at the time to the subject matter of the inquiry.

(4) To any individual with whom FHFA contracts to reproduce, by typing, photocopy or other means, any record within this system for use by FHFA and its employees in connection with their official duties or to any individual who is utilized by FHFA to perform clerical or stenographic functions relating to the official business of FHFA.

(5) To members of advisory committees that are created by FHFA or by Congress to render advice and recommendations to FHFA or to Congress, to be used solely in connection with their official, designated functions and is related to the purpose for which FHFA collected the records.

(6) To a Congressional office from the record of an individual in response to an inquiry from the Congressional office made at the request of that individual.

(7) To contractor personnel, grantees, volunteers, interns, and others performing or working on a contract, service, grant, cooperative agreement, or project for FHFA.

(8) To a court, magistrate, or administrative tribunal in the course of presenting evidence, including disclosures to opposing counsel or witnesses in the course of civil discovery, litigation, or settlement negotiations, or in connection with criminal law proceedings, or in response to a subpoena from a court of competent jurisdiction.

(9) To the Office of Management and Budget, Department of Justice (DOJ), Department of Labor, Office of Personnel Management, Equal Employment Opportunity Commission, Office of Special Counsel, Department of Homeland Security, or other Federal agencies to obtain advice regarding statutory, regulatory, policy, and other requirements related to the purpose for which FHFA collected the records.

(10) To DOJ (including United States Attorney Offices) or other Federal agencies conducting litigation or in proceedings before any court, or adjudicative or administrative body, when it is necessary to the litigation and one of the following is a party to the litigation or has an interest in such litigation:

1. FHFA
2. Any employee of FHFA in his/her official capacity;
3. Any employee of FHFA in his/her individual capacity where DOJ or FHFA has agreed to represent the employee; or
4. The United States or any agency thereof, is a party to the litigation or has an interest in such litigation, and FHFA determines that the records are both relevant and necessary to the litigation and the use of such records is compatible with the purpose for which FHFA collected the records.

(11) To the National Archives and Records Administration or other Federal agencies pursuant to records management inspections being conducted under the authority of 44 U.S.C. 2904 and 2906.

(12) To a Federal agency, organization, or individual for the purpose of performing audit or oversight operations as authorized by law, but only such information as is necessary and relevant to such audit or oversight function.

(13) To Fannie Mae, Freddie Mac, or a Federal Home Loan Bank as it relates to the purpose for which FHFA collected the records.

(14) To the Consumer Finance Protection Bureau in order to facilitate reporting under the Dodd-Frank Wall Street Reform and Consumer Protection Act (Pub. L. 111–203), as well as to conduct research, performance modeling, and examination monitoring.

DISCLOSURE TO CONSUMER REPORTING AGENCIES:

None.

POLICIES AND PRACTICE FOR STORING, RETRIEVING, ACCESSING, RETAINING AND DISPOSING OF RECORDS IN THE SYSTEM:

STORAGE:

Records are maintained in electronic format, paper form, and magnetic disk or tape. Electronic records are stored in computerized databases. Paper and magnetic disc, or tape records are stored in locked file rooms, locked file cabinets, or locked safes.

RETRIEVABILITY:

Records may be retrieved by unique loan identifier, or other identifier.

SAFEGUARDS:

Records are safeguarded in a secured environment. Buildings where records are stored have security cameras and 24-hour security guard service. Computerized records are safeguarded through use of access codes and other information technology security measures. Paper records are safeguarded by locked file rooms, locked file cabinets, or locked safes. Access to the records is restricted to those who require the records in the performance of official duties related to the purposes for which the system is maintained.

RETENTION AND DISPOSAL:

Records are maintained in accordance with National Archives and Records Administration and FHFA retention schedules. Records are disposed of according to accepted techniques.

SYSTEM MANAGER(S) AND ADDRESS:

Project Manager, National Mortgage Database, Federal Housing Finance Agency, 400 Seventh Street SW., Washington, DC 20024.

NOTIFICATION PROCEDURES:

Direct inquiries as to whether this system contains a record pertaining to an individual to the Privacy Act Officer. Inquiries may either be mailed to the Privacy Act Officer, Federal Housing Finance Agency, 400 Seventh Street SW., Washington, DC 20024, or submitted electronically at *http://www.fhfa.gov/Default.aspx?Page=236* in accordance with the procedures set forth in 12 CFR part 1204.

RECORD ACCESS PROCEDURES:

Direct requests for access to the Privacy Act Officer. Requests may either be mailed to the Privacy Act Officer, Federal Housing Finance Agency, 400 Seventh Street SW., Washington, DC 20024, or submitted electronically at *http://www.fhfa.gov/Default.aspx?Page=236* in accordance with the procedures set forth in 12 CFR part 1204.

CONTESTING RECORD PROCEDURES:

Direct requests to contest or appeal an adverse decision for a record to the Privacy Act Appeals Officer. Appeals may either be mailed to the Privacy Act Appeals Officer, Federal Housing Finance Agency, 400 Seventh Street SW., Washington, DC 20024, or submitted electronically at *http://www.fhfa.gov/Default.aspx?Page=236* in accordance with the procedures set forth in 12 CFR part 1204.

RECORD SOURCE CATEGORIES:

The information is obtained from credit repository files, other FHFA systems of records, other Federal government systems of records, commercial data aggregators, or other commercial entities.

EXEMPTIONS CLAIMED FOR THE SYSTEM:

None.

Dated: December 3, 2012.

Edward J. DeMarco,

Acting Director, Federal Housing Finance Agency.

[FR Doc. 2012–29689 Filed 12–7–12; 8:45 am]

BILLING CODE 8070–01–P

FEDERAL RESERVE SYSTEM

Change in Bank Control Notices; Acquisitions of Shares of a Bank or Bank Holding Company

The notificants listed below have applied under the Change in Bank Control Act (12 U.S.C. 1817(j)) and § 225.41 of the Board's Regulation Y (12 CFR 225.41) to acquire shares of a bank or bank holding company. The factors that are considered in acting on the notices are set forth in paragraph 7 of the Act (12 U.S.C. 1817(j)(7)).

The notices are available for immediate inspection at the Federal Reserve Bank indicated. The notices also will be available for inspection at the offices of the Board of Governors. Interested persons may express their views in writing to the Reserve Bank indicated for that notice or to the offices of the Board of Governors. Comments must be received not later than December 24, 2012.

A. Federal Reserve Bank of Atlanta (Chapelle Davis, Assistant Vice President) 1000 Peachtree Street, NE., Atlanta, Georgia 30309:

1. *John D. DuBard and Carolyn DuBard,* both of Tallahassee, Florida; to acquire additional voting shares of BSA Financial Services, Inc. and thereby indirectly acquire additional voting shares of Bank of St. Augustine, both in St. Augustine, Florida.

Board of Governors of the Federal Reserve System, December 5, 2012.

Robert deV. Frierson,

Secretary of the Board.

[FR Doc. 2012–29741 Filed 12–7–12; 8:45 am]

BILLING CODE 6210–01–P

FEDERAL RESERVE SYSTEM

Formations of, Acquisitions by, and Mergers of Bank Holding Companies

The companies listed in this notice have applied to the Board for approval, pursuant to the Bank Holding Company Act of 1956 (12 U.S.C. 1841 *et seq.*) (BHC Act), Regulation Y (12 CFR Part 225), and all other applicable statutes and regulations to become a bank holding company and/or to acquire the assets or the ownership of, control of, or the power to vote shares of a bank or bank holding company and all of the banks and nonbanking companies owned by the bank holding company, including the companies listed below.

The applications listed below, as well as other related filings required by the Board, are available for immediate inspection at the Federal Reserve Bank indicated. The applications will also be available for inspection at the offices of the Board of Governors. Interested persons may express their views in writing on the standards enumerated in the BHC Act (12 U.S.C. 1842(c)). If the proposal also involves the acquisition of a nonbanking company, the review also includes whether the acquisition of the nonbanking company complies with the standards in section 4 of the BHC Act

(12 U.S.C. 1843). Unless otherwise noted, nonbanking activities will be conducted throughout the United States.

Unless otherwise noted, comments regarding each of these applications must be received at the Reserve Bank indicated or the offices of the Board of Governors not later than December 26, 2012.

A. Federal Reserve Bank of St. Louis (Yvonne Sparks, Community Development Officer) P.O. Box 442, St. Louis, Missouri 63166–2034:

1. *Ozark Bancorp, Inc.;* to become a bank holding company by acquiring 100 percent of the voting shares of, Progressive Ozark Bank, Savings Bank, both of Salem, Missouri, from a federally chartered savings bank to a state-chartered commercial bank.

Board of Governors of the Federal Reserve System, December 5, 2012.

Robert deV. Frierson,

Secretary of the Board.

[FR Doc. 2012–29743 Filed 12–7–12; 8:45 am]

BILLING CODE 6210–01–P

FEDERAL RESERVE SYSTEM

Notice of Proposals To Engage in or To Acquire Companies Engaged in Permissible Nonbanking Activities

The companies listed in this notice have given notice under section 4 of the Bank Holding Company Act (12 U.S.C. 1843) (BHC Act) and Regulation Y, (12 CFR Part 225) to engage *de novo*, or to acquire or control voting securities or assets of a company, including the companies listed below, that engages either directly or through a subsidiary or other company, in a nonbanking activity that is listed in § 225.28 of Regulation Y (12 CFR 225.28) or that the Board has determined by Order to be closely related to banking and permissible for bank holding companies. Unless otherwise noted, these activities will be conducted throughout the United States.

Each notice is available for inspection at the Federal Reserve Bank indicated. The notice also will be available for inspection at the offices of the Board of Governors. Interested persons may express their views in writing on the question whether the proposal complies with the standards of section 4 of the BHC Act.

Unless otherwise noted, comments regarding the applications must be received at the Reserve Bank indicated or the offices of the Board of Governors not later than January 4, 2013.

A. Federal Reserve Bank of Richmond (Adam M. Drimer, Assistant Vice President) 701 East Byrd Street, Richmond, Virginia 23261–4528:

1. Live Oak Bancshares, Inc., Wilmington, North Carolina; to acquire 100 percent of the voting shares of Government Loan Solutions, Inc., Cleveland, Ohio, and engage in providing support services in connection with the settlement, accounting, and securitization processes for government guaranteed loans, including loans originated under the U.S. Small Business Administration loan programs and USDA loans; and thereby indirectly acquire 51percent of the voting shares of Secondary Market Access, LLC, Cleveland, Ohio, and thereby engage in activities related to extending credit and management consulting, pursuant to sections 225.28(b)(1); (b)(2) (b)(14), all of Regulation Y.

Board of Governors of the Federal Reserve System, December 5, 2012.

Robert deV. Frierson,

Secretary of the Board.

[FR Doc. 2012–29742 Filed 12–7–12; 8:45 am]

BILLING CODE 6210–01–P

FEDERAL TRADE COMMISSION

Agency Information Collection Activities; Proposed Collection; Comment Request; Extension

AGENCY: Federal Trade Commission (''Commission'' or ''FTC'').

ACTION: Notice.

SUMMARY: The information collection requirements described below will be submitted to the Office of Management and Budget (''OMB'') for review, as required by the Paperwork Reduction Act (''PRA''). The FTC seeks public comments on its proposal to extend through April 30, 2016 the current PRA clearance for information collection requirements contained in its Alternative Fuels Rule. That clearance expires on April 30, 2013.

DATES: Comments must be submitted on or before February 8, 2013.

ADDRESSES: Interested parties may file a comment online or on paper, by following the instructions in the Request for Comment part of the **SUPPLEMENTARY INFORMATION** section below. Write ''Paperwork Comment: FTC File No. P134200'' on your comment, and file your comment online at *https://ftcpublic.commentworks.com/ftc/altfuelspra* by following the instructions on the web-based form. If you prefer to file your comment on paper, mail or deliver your comment to the following address: Federal Trade Commission, Office of the Secretary, Room H–113 (Annex J), 600 Pennsylvania Avenue NW., Washington, DC 20580.

FOR FURTHER INFORMATION CONTACT: Requests for additional information or copies of the proposed information requirements for the Alternative Fuels Rule should be addressed to Hampton Newsome, Attorney, Division of Marketing Practices, Bureau of Consumer Protection, Federal Trade Commission, Room M–8102B, 600 Pennsylvania Avenue NW., Washington, DC 20580, (202) 326–2889.

SUPPLEMENTARY INFORMATION: Under the PRA, 44 U.S.C. 3501–3521, federal agencies must obtain approval from OMB for each collection of information they conduct or sponsor. ''Collection of information'' means agency requests or requirements that members of the public submit reports, keep records, or provide information to a third party. 44 U.S.C. 3502(3), 5 CFR 1320.3(c). As required by section 3506(c)(2)(A) of the PRA, the FTC is providing this opportunity for public comment before requesting that OMB extend the existing PRA clearance for the Alternative Fuels Rule, 16 CFR Part 309 (OMB Control Number 3084–0094).

The Rule, which implements the Energy Policy Act of 1992, Public Law 102–486, requires disclosure of specific information on labels posted on fuel dispensers for non-liquid alternative fuels and on labels on Alternative Fueled Vehicles (AFVs). To ensure the accuracy of these disclosures, the Rule also requires that sellers maintain records substantiating product-specific disclosures they include on these labels.

It is common practice for alternative fuel industry members to determine and monitor fuel ratings in the normal course of their business activities. This is because industry members must know and determine the fuel ratings of their products in order to monitor quality and to decide how to market them. ''Burden'' for PRA purposes is defined to exclude effort that would be expended regardless of any regulatory requirement. 5 CFR 1320.2(b)(2). Moreover, as originally anticipated when the Rule was promulgated in 1995, many of the information collection requirements and the originally-estimated hours were associated with one-time start up tasks of implementing standard systems and processes.

Other factors also limit the burden associated with the Rule. Certification may be a one-time event or require only infrequent revision. Disclosures on electric vehicle fuel dispensing systems may be useable for several years. Nonetheless, there is still some burden

associated with posting labels. There also will be some minimal burden associated with new or revised certification of fuel ratings and recordkeeping. The burden on vehicle manufacturers is limited because only newly-manufactured vehicles will require label posting and manufacturers produce very few new models each year.

I. Annual Hours Burden

Estimated total annual hours burden: 52,272 total burden hours

A. Non-Liquid Alternative Fuels

Certification: Staff estimates that the Rule's fuel rating certification requirements will affect approximately 550 industry members (compressed natural gas producers and distributors and manufacturers of electric vehicle fuel dispensing systems) and consume approximately one hour each per year for a total of 550 hours.

Recordkeeping: Staff estimates that all 5,900 industry members (non-liquid fuel producers, distributors, and retailers) will be subject to the Rule's recordkeeping requirements (associated with fuel rating certification) and that compliance will require approximately one-tenth hour each per year for a total of 590 hours.

Labeling: Staff estimates that labeling requirements will affect approximately nine of every ten industry members (or roughly 5,300 members out of 5,900), but that the number of annually affected members is approximately 1,100 because labels may remain effective for several years (staff assumes that in any given year approximately 20% of 5,300 industry members will need to replace their labels). Staff estimates that industry members require approximately one hour each per year for labeling their fuel dispensers for a total of 1,100 hours.

Sub-total: 2,240 hours (550 + 590 +1,100)

B. AFV Manufacturers

Recordkeeping: Staff estimates that a total of 13 manufacturers will require 30 minutes to comply with the Rule's recordkeeping requirements for a total of 7 hours, rounded.

Producing labels: Staff estimates 2.5 hours as the average time required of manufacturers to produce labels for each of the 10 new AFV models introduced industry-wide each year for a total of 25 hours.

Posting labels: Staff estimates 2 minutes as the average time to comply with the posting requirements for each of the approximately 1,500,000 new AFVs manufactured each year for a total of 50,000 hours.

Sub-total: 50,032 hours (7 + 25 + 50,000)

Thus, the total burden for these industries combined is approximately 52,272 hours (2,240 + 50,032).

II. Labor Costs

Estimated total labor costs: $1,090,918.

Labor costs are derived by applying appropriate hourly cost figures to the burden hours described above. According to Bureau of Labor Statistics data for 2011 (most recent available whole-year information),[1] the average compensation for fuel system operators is $28.99 per hour; $10.33 per hour for automotive service attendants; and $20.69 per hour for transportation equipment painters.

A. Non-Liquid Alternative Fuels

Certification and labeling: Generally, all of the estimated hours except for recordkeeping will be performed by fuel system operators, i.e., producers and distributors of fuels. Thus, the associated labor costs would be $47,833. [(550 certification hours + 1,100 labeling hours) × $28.99]

Recordkeeping: Only 1/6 of the total recordkeeping hours will be performed by fuel system operators (1/6 of 590 hours = approximately 98 hours; 98 hours × $28.99 = $2,841); the other 5/6 is attributable to service station employees (5/6 of 590 hours = approximately 492 hours; 492 hours × $10.33 = $5,082). Thus, the labor cost due to recordkeeping for the entire industry is approximately $7,923 ($2,841 for fuel system operators + $5,082 for service station employees).

Associated labor cost: $55,756 ($48,833 for certification and labeling costs + $7,923 for recordkeeping costs).

B. AFV Manufacturers

The maximum labor cost for the entire industry is approximately $1,035,162 per year for recordkeeping and producing and posting labels (50,032 total hours × $20.69 per hour).

Thus, the estimated total labor cost for both industries for all collection of information requirements is $1,090,918 ($55,756 + $1,035,162) per year.

III. Non-Labor Cost Burden

Estimated annual non-labor cost burden: $577,153.

A. Non-Liquid Alternative Fuels

Staff believes that there are no current start-up costs associated with the Rule, inasmuch as the Rule has been in effect since 1995. Industry members, therefore, have in place the capital equipment and means necessary to determine automotive fuel ratings and comply with the Rule. Industry members, however, incur the cost of procuring fuel dispenser and AFV labels to comply with the Rule. The estimated annual fuel labeling cost, based on estimates of approximately 2,140 fuel dispensers (assumptions: an estimated 20% of 5,350 total fuel retailers need to replace labels in any given year with an approximate five-year life for labels—i.e., 1,070 retailers—multiplied by an average of two dispensers per retailer) at thirty-eight cents for each label (per industry sources), is $813 ($0.38 × 2,140).

B. AFV Manufacturers

Here, too, staff believes that there are no current start-up costs associated with the Rule, for the same reasons as stated immediately above regarding the nonliquid alternative fuel industry. However, based on the labeling of an estimated 1,493,000 new and used AFVs each year at thirty-eight cents for each label (per industry sources), the annual AFV labeling cost is estimated to be $567,340 ($0.38 × 1,493,000).

Thus, the estimated total annual non-labor cost burden associated with the Rule is $577,153 ($813 + $576,340).

IV. Request for Comment

You can file a comment online or on paper. For the Commission to consider your comment, we must receive it on or before February 8, 2013. Write ''Paperwork Comment: FTC File No. P134200'' on your comment. Your comment B including your name and your state B will be placed on the public record of this proceeding, including, to the extent practicable, on the public Commission Web site, at *http://www.ftc.gov/os/publiccomments.shtm.* As a matter of discretion, the Commission tries to remove individuals' home contact information from comments before placing them on the Commission Web site.

Because your comment will be made public, you are solely responsible for making sure that your comment doesn't include any sensitive personal information, like anyone's Social Security number, date of birth, driver's license number or other state identification number or foreign country equivalent, passport number, financial account number, or credit or debit card

[1] The wage estimates in this Notice are based on mean hourly wages found at *http://www.bls.gov/news.release/archives/ocwage_03272012.pdf* (''Occupational Employment and Wages–May 2011,'' U.S. Department of Labor, released March 2012, Table 1 (''National employment and wage data from the Occupational Employment Statistics survey by occupation, May 2011'').

number. You are also solely responsible for making sure that your comment doesn't include any sensitive health information, like medical records or other individually identifiable health information. In addition, don't include any ''[t]rade secret or any commercial or financial information which is obtained from any person and which is privileged or confidential * * *, '' as provided in Section 6(f) of the FTC Act, 15 U.S.C. 46(f), and FTC Rule 4.10(a)(2), 16 CFR 4.10(a)(2). If you want the Commission to give your comment confidential treatment, you must file it in paper form, with a request for confidential treatment, and you have to follow the procedure explained in FTC Rule 4.9(c), 16 CFR 4.9(c). Your comment will be kept confidential only if the FTC General Counsel, in his or her sole discretion, grants your request in accordance with the law and the public interest.

Postal mail addressed to the Commission is subject to delay due to heightened security screening. As a result, we encourage you to submit your comments online, or to send them to the Commission by courier or overnight service. To make sure that the Commission considers your online comment, you must file it at *https://ftcpublic.commentworks.com/ftc/altfuelspra,* by following the instructions on the web-based form. If this Notice appears at *http://www.regulations.gov/#!home,* you also may file a comment through that Web site.

If you file your comment on paper, write ''Paperwork Comment: FTC File No. P134200'' on your comment and on the envelope, and mail or deliver it to the following address: Federal Trade Commission, Office of the Secretary, Room H–113 (Annex J), 600 Pennsylvania Avenue NW., Washington, DC 20580. If possible, submit your paper comment to the Commission by courier or overnight service.

Visit the Commission Web site at *http://www.ftc.gov* to read this Notice. The FTC Act and other laws that the Commission administers permit the collection of public comments to consider and use in this proceeding as appropriate. The Commission will consider all timely and responsive public comments that it receives on or before February 8, 2013. You can find more information, including routine uses permitted by the Privacy Act, in the Commission's privacy policy, at *http://www.ftc.gov/ftc/privacy.htm.*

The FTC invites comments on: (1) Whether the proposed collection of information is necessary for the proper performance of the functions of the agency, including whether the information will have practical utility; (2) the accuracy of the agency's estimate of the burden of the proposed collection of information, including the validity of the methodology and assumptions used; (3) ways to enhance the quality, utility, and clarity of the information to be collected; and (4) ways to minimize the burden of the collection of information.

David C. Shonka,

Acting General Counsel.

[FR Doc. 2012–29734 Filed 12–7–12; 8:45 am]

BILLING CODE 6750–01–P

DEPARTMENT OF HEALTH AND HUMAN SERVICES

Centers for Disease Control and Prevention

[60Day–13–0469]

Proposed Data Collections Submitted for Public Comment and Recommendations

In compliance with the requirement of Section 3506(c)(2)(A) of the Paperwork Reduction Act of 1995 for opportunity for public comment on proposed data collection projects, the Centers for Disease Control and Prevention (CDC) will publish periodic summaries of proposed projects. To request more information on the proposed projects or to obtain a copy of the data collection plans and instruments, call 404–639–7570 or send comments to Kimberly Lane, 1600 Clifton Road, MS D–74, Atlanta, GA 30333 or send an email to *omb@cdc.gov.*

Comments are invited on: (a) Whether the proposed collection of information is necessary for the proper performance of the functions of the agency, including whether the information shall have practical utility; (b) the accuracy of the agency's estimate of the burden of the proposed collection of information; (c) ways to enhance the quality, utility, and clarity of the information to be collected; and (d) ways to minimize the burden of the collection of information on respondents, including through the use of automated collection techniques or other forms of information technology. Written comments should be received within 60 days of this notice.

Proposed Project

National Program of Cancer Registries Cancer Surveillance System (OMB No. 0920–0469, exp. 11/30/2012)—Reinstatement—National Center for Chronic Disease Prevention and Health Promotion (NCCDPHP), Centers for Disease Control and Prevention (CDC).

Background and Brief Description

One of every four deaths in the United States is attributable to cancer, making it the second leading cause of death among Americans. In 2009, over 1,500,000 people were diagnosed with invasive cancer and 650,000 people died of cancer. Living with cancer also affects many people. In January 2008, the National Cancer Institute estimated that 11.9 million Americans were alive with a history of invasive cancer.

In addition to the personal impact of cancer, the financial burden is also substantial. The direct treatment costs of cancer in 2008 have been estimated at $93.2 billion, with additional indirect costs of $134.9 billion in lost productivity due to illness and premature death.

In 1992, Congress passed the Cancer Registries Amendment Act, which established the National Program of Cancer Registries (NPCR). Through the NPCR, CDC provides support for state-based central cancer registries (CCR) that collect, manage, and analyze data about cancer cases in their jurisdictions. The CCR are responsible for obtaining diagnostic and treatment information from a variety of sources and for reconciling this information to produce accurate incidence and prevalence statistics. Through the NPCR, CDC also provides CCR with technical assistance that supports common standards for data definition and quality in a core set of data items. The NPCR-funded registries, which are located in states, the District of Columbia, and U.S. territories, have reported a standardized data set to CDC annually through the National Program of Cancer Registries Cancer Surveillance System (NPCR CSS)(OMB No. 0920–0469, exp. 11/30/2012). Many registries maintain additional data items that are not part of the standard NPCR CSS report to CDC.

The NPCR CSS has allowed CDC to collect, aggregate, evaluate and disseminate cancer incidence data at the national and state level. The NPCR CSS is the primary source of information for *United States Cancer Statistics* (*USCS*), which CDC has published annually since 2002. The latest *USCS* report published in 2012 provided cancer statistics for 98% of the United States population from all cancer registries whose data met national data standards. Prior to the publication of *USCS,* cancer incidence data at the national level were available for only 14% of the population of the United States.

CDC has also used information reported through the NPCR CSS to

monitor cancer trends over time, describe geographic variation in cancer incidence throughout the country, and provide incidence data on minority populations and rare cancers. In addition, data on stage at diagnosis, type of treatment provided, and vital status allow CDC to assess progress in reducing morbidity and mortality from cancer. These activities and analyses further support CDC's planning and evaluation efforts for state and national cancer control and prevention. Finally, datasets compiled through the NPCR CSS have been made available to investigators for secondary analysis.

CDC plans to request OMB approval to reinstate the NPCR CSS information collection, with changes. First, the frequency of reporting to CDC will be changed from an annual to a semi-annual schedule. The additional report will allow CDC to compile preliminary cancer incidence estimates in advance of the lengthy process of data validation required for each registry's final annual report. Second, data definitions for each report will be updated to reflect changes in national standards for cancer diagnosis, treatment, and coding. These changes will affect the standard reports for all NPCR-funded central cancer registries.

The third set of changes applies to a subset of 10 central cancer registries. These CCR received ARRA funding to develop common standards and reporting mechanisms for enhanced description of cases of breast cancer, colorectal cancer, and chronic myelogenous leukemia (CML). The enhanced data items will support more in-depth analysis of treatment strategies and patient outcomes than is currently possible with the standard NPCR CSS information collection. The 10 registries that participated in the enhancement process will begin reporting the additional data items to CDC in 2013 as part of their routine submission. CDC plans to make de-identified data available for comparative effectiveness research (CER).

OMB approval will be requested for three years. Respondents will be NPCR-supported central cancer registries in U.S. states, territories, and the District of Columbia. Information will be reported electronically to CDC twice per year. The first report will consist of a single-year file for data that includes diagnoses 12 months past the close of the diagnosis year. The second report will consist of a cumulative file containing incidence data from the first diagnosis year for which the cancer registry collected data with the assistance of NPCR funds (e.g., 1995) through 24 months past the close of the diagnosis year (e.g., 2010 data submitted in 2012). The estimated burden per response is two hours. Because cancer incidence data are already collected, aggregated and used for analyses at the state level, the additional burden of reporting the information to CDC is small and the number of data items in the report does not affect the estimated burden per response. There are no costs to respondents except their time.

ESTIMATED ANNUALIZED BURDEN HOURS

Type of respondents	Form name	Number of respondents	Number of responses per respondent	Average burden per response (in hours)	Total burden (in hours)
Central Cancer Registries in States, Territories, and the District of Columbia.	Standard NPCR CSS Report	38	2	2	152
	Enhanced NPCR CSS Report	10	2	2	40
Total					192

Dated: December 4, 2012.

Ron A. Otten,

Director, Office of Scientific Integrity (OSI), Office of the Associate Director for Science (OADS), Office of the Director, Centers for Disease Control and Prevention.

[FR Doc. 2012–29722 Filed 12–7–12; 8:45 am]

BILLING CODE 4163–18–P

DEPARTMENT OF HEALTH AND HUMAN SERVICES

Centers for Disease Control and Prevention

[30Day-13–0128]

Agency Forms Undergoing Paperwork Reduction Act Review

The Centers for Disease Control and Prevention (CDC) publishes a list of information collection requests under review by the Office of Management and Budget (OMB) in compliance with the Paperwork Reduction Act (44 U.S.C. Chapter 35). To request a copy of these requests, call (404) 639–7570 or send an email to *omb@cdc.gov.* Send written comments to CDC Desk Officer, Office of Management and Budget, Washington, DC or by fax to (202) 395–5806. Written comments should be received within 30 days of this notice.

Proposed Project

Congenital Syphilis Case Investigation and Reporting Form (CDC73.126), OMB 0920–0128, Expiration 03/31/2013—Revision—National Center for HIV, Viral Hepatitis, STD and TB Prevention (NCHHSTP), Centers for Disease Control and Prevention (CDC).

Background and Brief Description

Congenital syphilis (CS) is an important sentinel health event that marks potential problems in both prenatal care and syphilis prevention programs. Congenital syphilis (CS) is nearly 100% preventable by early detection and treatment of syphilis in pregnant women before or during pregnancy.

Reducing congenital syphilis is a national objective in the U.S. Department of Health and Human Services report entitled, ''Healthy People 2020''.

The CDC continues to collect and report information on congenital syphilis morbidity as part of its ongoing Sexually Transmitted Disease (STD) surveillance efforts. A reporting form for congenital syphilis (CDC Form 73.126) was initiated in 1983 to improve detection, case management, and treatment of congenital syphilis cases. Continued data collection will assist in identifying needs for congenital syphilis prevention efforts nationwide.

The current CS reporting form was revised and approved by OMB in 2009 to collect information based on the surveillance case definition and removal of Reporting city information. It is being used by all health jurisdictions reporting CS to CDC as part of the National Notifiable Diseases Surveillance. For the new approval period, CDC requests elimination of the

field ''Did the infant/child have an IgM-specific treponemal test?'' This data element is no longer required because treponemal IgM technologies, for the purpose of identifying CS in an infant, are highly insensitive. CDC also requests elimination of infant gender because gender does not influence the case definition or define risk. The following fields have been added: ''Mothers obstetric history'', ''Did mother have treponemal test result: If so, when was the test performed?'' ''What stage of syphilis did mother have?'', ''Date of Mother's treatment'', ''What was mother's treatment?'' ''What clinical and what surveillance stage of syphilis did the mother have during pregnancy'' ''Presumptive has been replaced with probable,'' as there is no case definition for presumptive congenital syphilis and, ''Mother's HIV status during pregnancy''.

The congenital syphilis data will continue to be used to develop intervention strategies and to evaluate ongoing control efforts. There is no cost to respondents other than their time. The total estimated annual burden hours are 62.

ESTIMATE OF ANNUALIZED BURDEN TABLE

Types of respondent	Form name	Number of respondents	Number of responses per respondent	Average burden per response (in hours)
State Health Departments	Congenital Syphilis (CS) Case Investigation and Report.	10	11	20/60
Territorial Health Agencies	Congenital Syphilis (CS) Case Investigation and Report.	3	11	20/60
City and county health departments	Congenital Syphilis (CS) Case Investigation and Report.	4	11	20/60

Dated: December 4, 2012.

Ron A. Otten,

Director, Office of Scientific Integrity (OSI), Office of the Associate Director for Science (OADS), Office of the Director, Centers for Disease Control and Prevention.

[FR Doc. 2012–29723 Filed 12–7–12; 8:45 am]

BILLING CODE 4163–18–P

DEPARTMENT OF HEALTH AND HUMAN SERVICES

Food and Drug Administration

[Docket No. FDA–2012–N–0001]

Endocrinologic and Metabolic Drugs Advisory Committee; Notice of Meeting

AGENCY: Food and Drug Administration, HHS.

ACTION: Notice.

This notice announces a forthcoming meeting of a public advisory committee of the Food and Drug Administration (FDA). The meeting will be open to the public.

Name of Committee: Endocrinologic and Metabolic Drugs Advisory Committee.

General Function of the Committee: To provide advice and recommendations to the Agency on FDA's regulatory issues.

Date and Time: The meeting will be held on January 10, 2013, from 8 a.m. to 5 p.m.

Location: FDA White Oak Campus, 10903 New Hampshire Ave., Building 31 Conference Center, the Great Room (rm. 1503), Silver Spring, MD 20993–0002. Information regarding special accommodations due to a disability, visitor parking, and transportation may be accessed at *http://www.fda.gov/AdvisoryCommittees/default.htm*; under the heading ''Resources for You,'' click on ''Public Meetings at the FDA White Oak Campus.'' Please note that visitors to the White Oak Campus must enter through Building 1.

Contact Person: Caleb Briggs, Center for Drug Evaluation and Research, Food and Drug Administration, 10903 New Hampshire Ave., Bldg. 31, Rm. 2417, Silver Spring, MD 20993–0002, 301–796–9001, FAX: 301–847–8533, email: *EMDAC@fda.hhs.gov,* or FDA Advisory Committee Information Line, 1–800–741–8138 (301–443–0572 in the Washington, DC area). A notice in the **Federal Register** about last minute modifications that impact a previously announced advisory committee meeting cannot always be published quickly enough to provide timely notice. Therefore, you should always check the Agency's Web site at *http://www.fda.gov/AdvisoryCommittees/default.htm* and scroll down to the appropriate advisory committee meeting link, or call the advisory committee information line to learn about possible modifications before coming to the meeting.

Agenda: The committee will discuss new drug application (NDA) 204042, canagliflozin tablets, proposed trade name INVOCANA, submitted by Janssen Research and Development, LLC. Canagliflozin is a member of the sodium-glucose co-transporter 2 (SGLT2) inhibitors, and was developed as an adjunct to diet and exercise to improve glycemic control in adults with type 2 diabetes mellitus.

FDA intends to make background material available to the public no later than 2 business days before the meeting. If FDA is unable to post the background material on its Web site prior to the meeting, the background material will be made publicly available at the location of the advisory committee meeting, and the background material will be posted on FDA's Web site after the meeting. Background material is available at *http://www.fda.gov/AdvisoryCommittees/Calendar/default.htm.* Scroll down to the appropriate advisory committee link.

Procedure: Interested persons may present data, information, or views, orally or in writing, on issues pending before the committee. Written submissions may be made to the contact person on or before December 27, 2012. Oral presentations from the public will be scheduled between approximately 1 p.m. and 2 p.m. Those individuals interested in making formal oral presentations should notify the contact person and submit a brief statement of the general nature of the evidence or arguments they wish to present, the names and addresses of proposed participants, and an indication of the approximate time requested to make their presentation on or before December 20, 2012. Time allotted for each presentation may be limited. If the number of registrants requesting to speak is greater than can be reasonably accommodated during the scheduled open public hearing session, FDA may conduct a lottery to determine the speakers for the scheduled open public hearing session. The contact person will notify interested persons regarding their request to speak by December 21, 2012.

Persons attending FDA's advisory committee meetings are advised that the

Agency is not responsible for providing access to electrical outlets.

FDA welcomes the attendance of the public at its advisory committee meetings and will make every effort to accommodate persons with physical disabilities or special needs. If you require special accommodations due to a disability, please contact Caleb Briggs at least 7 days in advance of the meeting.

FDA is committed to the orderly conduct of its advisory committee meetings. Please visit our Web site at *http://www.fda.gov/AdvisoryCommittees/AboutAdvisoryCommittees/ucm111462.htm* for procedures on public conduct during advisory committee meetings.

Notice of this meeting is given under the Federal Advisory Committee Act (5 U.S.C. app. 2).

Dated: December 4, 2012.

Jill Hartzler Warner,

Acting Associate Commissioner for Special Medical Programs.

[FR Doc. 2012–29650 Filed 12–7–12; 8:45 am]

BILLING CODE 4160–01–P

DEPARTMENT OF HEALTH AND HUMAN SERVICES

Food and Drug Administration

[Docket No. FDA–2012–N–0001]

Cellular, Tissue and Gene Therapies Advisory Committee; Notice of Meeting

AGENCY: Food and Drug Administration, HHS.

ACTION: Notice.

This notice announces a forthcoming teleconference meeting of a public advisory committee of the Food and Drug Administration (FDA). At least one portion of the meeting will be closed to the public.

Name of Committee: Cellular, Tissue and Gene Therapies Advisory Committee.

General Function of the Committee: To provide advice and recommendations to the Agency on FDA's regulatory issues.

DATES: *Date and Time:* The teleconference meeting will be held on January 15, 2013 from 2 p.m. to 5:30 p.m., Eastern Time.

Location: National Institutes of Health (NIH), Building 29B, Conference Room C, 9000 Rockville Pike, Bethesda, MD 20892. The public is welcome to attend the meeting at the specified location where a speakerphone will be provided. Public participation in the meeting is limited to the use of the speakerphone in the conference room. Important information about transportation and directions to the NIH campus, parking and security procedures is available on the internet at *http://www.nih.gov/about/visitor/index.htm.* (FDA has verified the Web site address, but FDA is not responsible for any subsequent changes to the Web site after this document publishes in the **Federal Register**.) Visitors must show two forms of identification, one of which must be a government-issued photo identification such as a Federal employee badge, driver's license, passport, green card, etc. Detailed information about security procedures is located at *http://www.nih.gov/about/visitorsecurity.htm.* Due to the limited available parking, visitors are encouraged to use public transportation.

Contact Person: Gail Dapolito, Center for Biologics Evaluation and Research (HFM–71), Food and Drug Administration, 1401 Rockville Pike, Rockville MD 20852, 301–827–1289, or FDA Advisory Committee Information Line, 1–800–741–8138 (301–443–0572 in the Washington, DC area), to find out further information regarding FDA advisory committees. A notice in the **Federal Register** about last minute modifications that impact a previously announced advisory committee meeting cannot always be published quickly enough to provide timely notice. Therefore, you should always check the Agency's Web site at *http://www.fda.gov/AdvisoryCommittees/default.htm* and scroll down to the appropriate advisory committee meeting link, or call the advisory committee information line to learn about possible modifications before coming to the meeting.

Agenda: On January 15, 2013, the committee will meet in open session to hear updates of research programs in the Laboratory of Immunology, Division of Therapeutic Proteins, Office of Biotechnology Products, Center for Drug Evaluation and Research, FDA.

FDA intends to make background material available to the public no later than 2 business days before the meeting. If FDA is unable to post the background material on its Web site prior to the meeting, the background material will be made publicly available at the location of the advisory committee meeting, and the background material will be posted on FDA's Web site after the meeting. Background material is available at *http://www.fda.gov/AdvisoryCommittees/Calendar/default.htm.* Scroll down to the appropriate advisory committee meeting link.

Procedure: On January 15, 2013, from 2 p.m. to 4:30 p.m. (Eastern Time) the meeting is open to the public. Interested persons may present data, information, or views, orally or in writing, on issues pending before the committee. Written submissions may be made to the contact person on or before January 8, 2013. Oral presentations from the public will be scheduled between approximately 3:30 p.m. and 4:30 p.m. Those individuals interested in making formal oral presentations should notify the contact person and submit a brief statement of the general nature of the evidence or arguments they wish to present, the names and addresses of proposed participants, and an indication of the approximate time requested to make their presentation on or before December 31, 2012. Time allotted for each presentation may be limited. If the number of registrants requesting to speak is greater than can be reasonably accommodated during the scheduled open public hearing session, FDA may conduct a lottery to determine the speakers for the scheduled open public hearing session. The contact person will notify interested persons regarding their request to speak by January 2, 2013.

Closed Committee Deliberations: On January 15, from 4:30 p.m. to 5:30 p.m., the meeting will be closed to permit discussion where disclosure would constitute a clearly unwarranted invasion of personal privacy (5 U.S.C. 552b(c)(6)). The committee will discuss reports of intramural research programs and make recommendations regarding personnel staffing decisions.

Persons attending FDA's advisory committee meetings are advised that the Agency is not responsible for providing access to electrical outlets.

FDA welcomes the attendance of the public at its advisory committee meetings and will make every effort to accommodate persons with physical disabilities or special needs. If you require special accommodations due to a disability, please contact Gail Dapolito at least 7 days in advance of the meeting.

FDA is committed to the orderly conduct of its advisory committee meetings. Please visit our Web site at *http://www.fda.gov/AdvisoryCommittees/AboutAdvisoryCommittees/ucm111462.htm* for procedures on public conduct during advisory committee meetings.

Notice of this meeting is given under the Federal Advisory Committee Act (5 U.S.C. app. 2).

Dated: December 5, 2012.

Jill Hartzler Warner,

Acting Associate Commissioner for Special Medical Programs.

[FR Doc. 2012–29706 Filed 12–7–12; 8:45 am]

BILLING CODE 4160–01–P

DEPARTMENT OF HEALTH AND HUMAN SERVICES

Health Resources and Services Administration

Agency Information Collection Activities: Submission to OMB for Review and Approval; Public Comment Request

ACTION: Notice.

SUMMARY: In compliance with section 3506(c)(2)(A) of the Paperwork Reduction Act of 1995 (44 U.S.C. Chapter 35), the Health Resources and Services Administration (HRSA) will submit an Information Collection Request (ICR) to the Office of Management and Budget (OMB). Comments submitted during the first public review of this ICR will be provided to OMB. OMB will accept further comments from the public during the review and approval period. To request a copy of the clearance requests submitted to OMB for review, email *paperwork@hrsa.gov* or call the HRSA Reports Clearance Office at (301) 443–1984.

Information Collection Request Title: The Health Education Assistance Loan (HEAL) Program: Forms (OMB No. 0915–0043)—Extension

Abstract: The Health Education Assistance Loan (HEAL) program continues to administer and to monitor outstanding loans which were provided to eligible students to pay for educational costs in a number of health professions. HEAL forms collect information that is required for responsible program management. The HEAL Repayment Schedule, Fixed and Variable, provides the borrower with the cost of a HEAL loan, the number and amount of payments, and the Truth-in-Lending disclosures. The Lender's Report on HEAL Student Loans Outstanding (Call Report), provides information on the status of loans outstanding by the number of borrowers and total number of loans whose loan payments are in various stages of the loan cycle, such as student education and repayment, and the corresponding dollar amounts. These forms are needed to provide borrowers with information on the cost of their loan(s) and to determine which lenders may have excessive delinquencies and defaulted loans.

Burden Statement: Burden in this context means the time expended by persons to generate, maintain, retain, disclose, or provide the information requested. This includes the time needed to review instructions; to develop, acquire, install, and utilize technology and systems for the purpose of collecting, validating, and verifying information, processing and maintaining information, and disclosing and providing information; to train personnel and to be able to respond to a collection of information; to search data sources; to complete and review the collection of information; and to transmit or otherwise disclose the information. The total annual burden hours estimated for this ICR are summarized in the table below.

The annual estimate of burden is as follows:

Instrument	Number of respondents	Responses per respondent	Total responses	Hours per response	Total burden hours
Disclosure: Repayment Schedule HRSA 502–1,2	7	50	350	.50	175
Reporting: Call Report HRSA 512	15	4	60	.75	45
Total Reporting and Disclosure	22		410		220

ADDRESSES: Submit your comments to the desk officer for HRSA either by email to *OIRA_submission@omb.eop.gov* or by fax to 202–395–5806. Please direct all correspondence to the ''attention of the desk officer for HRSA.''

Deadline: Comments on this ICR should be received within 30 days of this notice.

Dated: December 3, 2012.

Bahar Niakan,

Director, Division of Policy and Information Coordination.

[FR Doc. 2012–29728 Filed 12–7–12; 8:45 am]

BILLING CODE 4165–15–P

DEPARTMENT OF HEALTH AND HUMAN SERVICES

Health Resources and Services Administration

National Advisory Council on the National Health Service Corps; Notice of Meeting

In accordance with section 10(a)(2) of the Federal Advisory Committee Act (Pub. L. 92–463), notice is hereby given of the following meeting:

Name: National Advisory Council on the National Health Service Corps (NHSC).

Dates And Time: January 10, 2013—9:30 a.m.—4:45 p.m., January 11, 2013—8:00 a.m.—12:00 p.m.

Place: Health Resources and Services Administration, Parklawn Building, 5600 Fishers Lane, Room 16–49, Rockville, MD 20857.

Status: The meeting will be open to the public.

Agenda: The Council is convening in Rockville, Maryland to hear the Health Resources and Services Administration and NHSC program updates and discuss NHSC's retention strategy and inter-agency workforce efforts. A portion of the meeting will be open for public comment and questions on the second day.

The public can join the meeting via audio conference call on the dates and times specified above using the following information: Dial-in number: 1–888–455–9651; Passcode: 7699967.

FOR FURTHER INFORMATION CONTACT: Njeri Jones, Bureau of Clinician Recruitment and Service, Health Resources and Services Administration, Parklawn Building, Room 13–64, 5600 Fishers Lane, Rockville, MD 20857; email: *NJones@hrsa.gov;* Telephone: (301) 443–2541.

Dated: December 3, 2012.

Bahar Niakan,

Director, Division of Policy and Information Coordination.

[FR Doc. 2012–29727 Filed 12–7–12; 8:45 am]

BILLING CODE 4165–15–P

DEPARTMENT OF HEALTH AND HUMAN SERVICES

National Institutes of Health

National Institute on Deafness and Other Communication Disorders; Notice of Meeting

Pursuant to section 10(d) of the Federal Advisory Committee Act, as amended (5 U.S.C. App.), notice is hereby given of a meeting of the National Deafness and Other Communication Disorders Advisory Council.

The meeting will be open to the public as indicated below, with attendance limited to space available. Individuals who plan to attend and need special assistance, such as sign language interpretation or other reasonable accommodations, should notify the Contact Person listed below in advance of the meeting.

The meeting will be closed to the public in accordance with the provisions set forth in sections 552b(c)(4) and 552b(c)(6), Title 5 U.S.C., as amended. The grant applications and the discussions could disclose confidential trade secrets or commercial property such as patentable material, and personal information concerning individuals associated with the grant applications, the disclosure of which would constitute a clearly unwarranted invasion of personal privacy.

Name of Committee: National Deafness and Other Communication Disorders Advisory Council.

Date: January 25, 2013.

Closed: 8:30 a.m. to 10:20 a.m.

Agenda: To review and evaluate grant applications.

Place: National Institutes of Health, Building 31, 31 Center Drive, Conference Room 6, Bethesda, MD 20892.

Open: 10:20 a.m. to 1:50 p.m.

Agenda: Staff reports on divisional, programmatic, and special activities.

Place: National Institutes of Health, Building 31, 31 Center Drive, Conference Room 6, Bethesda, MD 20892.

Contact Person: Craig A. Jordan, Ph.D., Director, Division of Extramural Activities, NIDCD, NIH, Executive Plaza South, Room 400C, 6120 Executive Blvd., Bethesda, MD 20892–7180, 301–496–8693, *jordanc@nidcd.nih.gov.*

Any interested person may file written comments with the committee by forwarding the statement to the Contact Person listed on this notice. The statement should include the name, address, telephone number and when applicable, the business or professional affiliation of the interested person.

In the interest of security, NIH has instituted stringent procedures for entrance onto the NIH campus. All visitor vehicles, including taxicabs, hotel, and airport shuttles will be inspected before being allowed on campus. Visitors will be asked to show one form of identification (for example, a government-issued photo ID, driver's license, or passport) and to state the purpose of their visit.

Information is also available on the Institute's/Center's home page: *www.nidcd.nih.gov/about/groups/ndcdac/ndcdac.htm,* where an agenda and any additional information for the meeting will be posted when available.

(Catalogue of Federal Domestic Assistance Program Nos. 93.173, Biological Research Related to Deafness and Communicative Disorders, National Institutes of Health, HHS)

Dated: December 4, 2012.

Melanie J. Gray,

Program Analyst, Office of Federal Advisory Committee Policy.

[FR Doc. 2012–29661 Filed 12–7–12; 8:45 am]

BILLING CODE 4140–01–P

DEPARTMENT OF HEALTH AND HUMAN SERVICES

National Institutes of Health

Center for Scientific Review; Notice of Closed Meetings

Pursuant to section 10(d) of the Federal Advisory Committee Act, as amended (5 U.S.C. App.), notice is hereby given of the following meetings.

The meetings will be closed to the public in accordance with the provisions set forth in sections 552b(c)(4) and 552b(c)(6), Title 5 U.S.C., as amended. The grant applications and the discussions could disclose confidential trade secrets or commercial property such as patentable material, and personal information concerning individuals associated with the grant applications, the disclosure of which would constitute a clearly unwarranted invasion of personal privacy.

Name of Committee: Center for Scientific Review Special Emphasis Panel; PAR–12–101: Hearing Health Care Outcomes.

Date: December 19, 2012.

Time: 1:00 p.m. to 3:00 p.m.

Agenda: To review and evaluate grant applications.

Place: National Institutes of Health, 6701 Rockledge Drive, Bethesda, MD 20892 (Telephone Conference Call).

Contact Person: Lynn E. Luethke, Ph.D., Scientific Review Officer, Center for Scientific Review, National Institutes of Health, 6701 Rockledge Drive, Room 5166, MSC 7844, Bethesda, MD 20892, (301) 806–3323, *luethkel@csr.nih.gov.*

This notice is being published less than 15 days prior to the meeting due to the timing limitations imposed by the review and funding cycle.

Name of Committee: Center for Scientific Review Special Emphasis Panel; Member Conflict: Metabolic Disorders.

Date: December 19, 2012.

Time: 2:00 p.m. to 3:30 p.m.

Agenda: To review and evaluate grant applications.

Place: National Institutes of Health, 6701 Rockledge Drive, Bethesda, MD 20892 (Telephone Conference Call).

Contact Person: John Bleasdale, Ph.D., Scientific Review Officer, Center for Scientific Review, National Institutes of Health, 6701 Rockledge Drive, Room 6170, MSC 7892, Bethesda, MD 20892, 301–435–4514, *bleasdaleje@csr.nih.gov.*

This notice is being published less than 15 days prior to the meeting due to the timing limitations imposed by the review and funding cycle.

(Catalogue of Federal Domestic Assistance Program Nos. 93.306, Comparative Medicine; 93.333, Clinical Research, 93.306, 93.333, 93.337, 93.393–93.396, 93.837–93.844, 93.846–93.878, 93.892, 93.893, National Institutes of Health, HHS)

Dated: December 4, 2012.

Michelle Trout,

Program Analyst, Office of Federal Advisory Committee Policy.

[FR Doc. 2012–29665 Filed 12–7–12; 8:45 am]

BILLING CODE 4140–01–P

DEPARTMENT OF HEALTH AND HUMAN SERVICES

National Institutes of Health

Center for Scientific Review; Notice of Closed Meeting

Pursuant to section 10(d) of the Federal Advisory Committee Act, as amended (5 U.S.C. App.), notice is hereby given of the following meeting.

The meeting will be closed to the public in accordance with the provisions set forth in sections 552b(c)(4) and 552b(c)(6), Title 5 U.S.C., as amended. The grant applications and the discussions could disclose confidential trade secrets or commercial property such as patentable material, and personal information concerning individuals associated with the grant applications, the disclosure of which would constitute a clearly unwarranted invasion of personal privacy.

Name of Committee: Center for Scientific Review Special Emphasis Panel; Urology Small Business.

Date: December 17, 2012.

Time: 4:00 p.m. to 5:00 p.m.

Agenda: To review and evaluate grant applications.

Place: National Institutes of Health, 6701 Rockledge Drive, Bethesda, MD 20892, (Telephone Conference Call).

Contact Person: Ryan G. Morris, Ph.D., Scientific Review Officer, Center for Scientific Review, National Institutes of

Health, 6701 Rockledge Drive, Room 4205, MSC 7814, Bethesda, MD 20892, 301–435–1501, *morrisr@csr.nih.gov*.

This notice is being published less than 15 days prior to the meeting due to the timing limitations imposed by the review and funding cycle.

(Catalogue of Federal Domestic Assistance Program Nos. 93.306, Comparative Medicine; 93.333, Clinical Research, 93.306, 93.333, 93.337, 93.393–93.396, 93.837–93.844, 93.846–93.878, 93.892, 93.893, National Institutes of Health, HHS)

Dated: December 4, 2012.

Michelle Trout,

Program Analyst, Office of Federal Advisory Committee Policy.

[FR Doc. 2012–29663 Filed 12–7–12; 8:45 am]

BILLING CODE 4140–01–P

DEPARTMENT OF HEALTH AND HUMAN SERVICES

National Institutes of Health

Center for Scientific Review; Notice of Closed Meetings

Pursuant to section 10(d) of the Federal Advisory Committee Act, as amended (5 U.S.C. App.), notice is hereby given of the following meetings.

The meetings will be closed to the public in accordance with the provisions set forth in sections 552b(c)(4) and 552b(c)(6), Title 5 U.S.C., as amended. The grant applications and the discussions could disclose confidential trade secrets or commercial property such as patentable material, and personal information concerning individuals associated with the grant applications, the disclosure of which would constitute a clearly unwarranted invasion of personal privacy.

Name of Committee: Center for Scientific Review Special Emphasis Panel; Member Conflict: Viral Pathogens.

Date: December 10, 2012.

Time: 2:00 p.m. to 3:00 p.m.

Agenda: To review and evaluate grant applications.

Place: National Institutes of Health, 6701 Rockledge Drive, Bethesda, MD 20892, (Telephone Conference Call).

Contact Person: Richard G. Kostriken, Ph.D., Scientific Review Officer, Center for Scientific Review, National Institutes of Health, 6701 Rockledge Drive, Room 3192, MSC 7808, Bethesda, MD 20892, 301–402–4454, *kostrikr@csr.nih.gov*.

This notice is being published less than 15 days prior to the meeting due to the timing limitations imposed by the review and funding cycle.

Name of Committee: Center for Scientific Review Special Emphasis Panel; Member Conflict: Bacterial Pathogens.

Date: December 17, 2012.

Time: 4:00 p.m. to 5:00 p.m.

Agenda: To review and evaluate grant applications.

Place: National Institutes of Health, 6701 Rockledge Drive, Bethesda, MD 20892, (Telephone Conference Call).

Contact Person: John C. Pugh, Ph.D., Scientific Review Officer, Center for Scientific Review, National Institutes of Health, 6701 Rockledge Drive, Room 3114, MSC 7808, Bethesda, MD 20892, (301) 435–2398, *pughjohn@csr.nih.gov*.

This notice is being published less than 15 days prior to the meeting due to the timing limitations imposed by the review and funding cycle.

(Catalogue of Federal Domestic Assistance Program Nos. 93.306, Comparative Medicine; 93.333, Clinical Research, 93.306, 93.333, 93.337, 93.393–93.396, 93.837–93.844, 93.846–93.878, 93.892, 93.893, National Institutes of Health, HHS)

Dated: December 4, 2012.

Melanie J. Gray,

Program Analyst, Office of Federal Advisory Committee Policy.

[FR Doc. 2012–29664 Filed 12–7–12; 8:45 am]

BILLING CODE 4140–01–P

DEPARTMENT OF HOMELAND SECURITY

Federal Emergency Management Agency

[Docket ID FEMA–2012–0003; Internal Agency Docket No. FEMA–B–1274]

Changes in Flood Hazard Determinations

AGENCY: Federal Emergency Management Agency, DHS.

ACTION: Notice.

SUMMARY: This notice lists communities where the addition or modification of Base Flood Elevations (BFEs), base flood depths, Special Flood Hazard Area (SFHA) boundaries or zone designations, or the regulatory floodway (hereinafter referred to as flood hazard determinations), as shown on the Flood Insurance Rate Maps (FIRMs), and where applicable, in the supporting Flood Insurance Study (FIS) reports, prepared by the Federal Emergency Management Agency (FEMA) for each community, is appropriate because of new scientific or technical data. The FIRM, and where applicable, portions of the FIS report, have been revised to reflect these flood hazard determinations through issuance of a Letter of Map Revision (LOMR), in accordance with Title 44, Part 65 of the Code of Federal Regulations (44 CFR Part 65). The LOMR will be used by insurance agents and others to calculate appropriate flood insurance premium rates for new buildings and the contents of those buildings. For rating purposes, the currently effective community number is shown in the table below and must be used for all new policies and renewals.

DATES: These flood hazard determinations will become effective on the dates listed in the table below and revise the FIRM panels and FIS report in effect prior to this determination for the listed communities.

From the date of the second publication of notification of these changes in a newspaper of local circulation, any person has ninety (90) days in which to request through the community that the Deputy Associate Administrator for Mitigation reconsider the changes. The flood hazard determination information may be changed during the 90-day period.

ADDRESSES: The affected communities are listed in the table below. Revised flood hazard information for each community is available for inspection at both the online location and the respective community map repository address listed in the table below. Additionally, the current effective FIRM and FIS report for each community are accessible online through the FEMA Map Service Center at *www.msc.fema.gov* for comparison.

Submit comments and/or appeals to the Chief Executive Officer of the community as listed in the table below.

FOR FURTHER INFORMATION CONTACT: Luis Rodriguez, Chief, Engineering Management Branch, Federal Insurance and Mitigation Administration, FEMA, 500 C Street SW., Washington, DC 20472, (202) 646–4064, or (email) *Luis.Rodriguez3@fema.dhs.gov;* or visit the FEMA Map Information eXchange (FMIX) online at *www.floodmaps.fema.gov/fhm/fmx_main.html.*

SUPPLEMENTARY INFORMATION: The specific flood hazard determinations are not described for each community in this notice. However, the online location and local community map repository address where the flood hazard determination information is available for inspection is provided.

Any request for reconsideration of flood hazard determinations must be submitted to the Chief Executive Officer of the community as listed in the table below.

The modifications are made pursuant to section 201 of the Flood Disaster Protection Act of 1973, 42 U.S.C. 4105, and are in accordance with the National Flood Insurance Act of 1968, 42 U.S.C. 4001 *et seq.,* and with 44 CFR Part 65.

The FIRM and FIS report are the basis of the floodplain management measures that the community is required either to adopt or to show evidence of having in effect in order to qualify or remain

qualified for participation in the National Flood Insurance Program (NFIP).

These flood hazard determinations, together with the floodplain management criteria required by 44 CFR 60.3, are the minimum that are required. They should not be construed to mean that the community must change any existing ordinances that are more stringent in their floodplain management requirements. The community may at any time enact stricter requirements of its own or pursuant to policies established by other Federal, State, or regional entities. The flood hazard determinations are in accordance with 44 CFR 65.4.

The affected communities are listed in the following table. Flood hazard determination information for each community is available for inspection at both the online location and the respective community map repository address listed in the table below. Additionally, the current effective FIRM and FIS report for each community are accessible online through the FEMA Map Service Center at *www.msc.fema.gov* for comparison.

State and county	Location and case No.	Chief executive officer of community	Community map repository	Online location of Letter of Map Revision	Effective date of modification	Community No.
Alabama: Mobile ..	Unincorporated areas of Mobile County, (12–04–0828P).	The Honorable Connie Hudson, President, Mobile County Commission, P.O. Box 1443, Mobile, AL 36633.	Mobile County Government Plaza, Engineering Department, 205 Government Street, 3rd Floor, South Tower, Mobile, AL 36644.	*http://www.bakeraecom.com/index.php/alabama/mobile/.*	November 23, 2012	015008
Arizona:						
Maricopa	City of Phoenix, (12–09–0762P).	The Honorable Greg Stanton, Mayor, City of Phoenix, 200 West Washington Street, 11th Floor, Phoenix, AZ 85003.	Transportation Department, 200 West Washington Street, 5th Floor, Phoenix, AZ 85003.	*http://www.r9map.org/Docs/12-09-0762P-040051-102IAC.pdf.*	November 9, 2012	040051
Maricopa	City of Tempe, (12–09–0762P).	The Honorable Hugh Hallman, Mayor, City of Tempe, City Hall Municipal Complex, 31 East 5th Street, Tempe, AZ 85281.	City Hall, Engineering Department, 31 East 5th Street, Tempe, AZ 85281.	*http://www.r9map;.org/Docs/12-09-0762P-040054-102IAC.pdf.*	November 9, 2012	040054
Pinal	City of Coolidge, (12–09–0751P).	The Honorable Thomas Shope, Mayor, City of Coolidge, P. O. Box 1627, Coolidge, AZ 85128.	130 West Central Avenue, Coolidge, AZ 85228.	*http://www.r9map.org/Docs/12-09-0751P-040082-102IAC.pdf.*	November 26, 2012	040082
Pinal	Unincorporated areas of Pinal County, (12–09–0751P).	The Honorable David Snider, Chairman, Pinal County Board of Supervisors, P. O. Box 827, Florence, AZ 85132.	Pinal County, Engineering Department, 31 North Pinal Street, Building F, Florence, AZ 85232.	*http://www.r9map.org/Docs/12-09-0751P-040077-102IAC.pdf.*	November 26, 2012	040077
Arkansas:						
Benton	City of Centerton, (12–06–2356P).	The Honorable Bill Edwards, Mayor, City of Centerton, P.O. Box 208, Centerton, AR 72719.	City Hall, 290 Main Street, Centerton, AR 72719.	*http://www.rampp-team.com/lomrs.htm.*	December 6, 2012	050399
Faulkner	City of Vilonia, (12–06–1423P).	The Honorable James Firestone, Mayor, City of Vilonia, P.O. Box 188, Vilonia, AR 72173.	City Hall, 1113 Main Street, Vilonia, AR 72173.	*http://www.rampp-team.com/lomrs.htm.*	December 6, 2012	050417
California:						
Mendocino	Unincorporated areas of Mendocino County, (12–09–1922P).	The Honorable John McCowen, Chairman, Mendocino County Board of Supervisors, 501 Low Gap Road, Ukiah, CA 95482.	Mendocino County Planning Department, 501 Low Gap Road, Ukiah, CA 95482.	*http://www.r9map.org/Docs/12-09-1922P-060183-102IAC.pdf.*	December 3, 2012	060183
Santa Clara ..	Unincorporated areas of Santa Clara County, (12–09–0752P).	The Honorable George Shirakawa, President, Santa Clara County Board of Supervisors, 70 West Hedding Street, 10th Floor, East Wing, San Jose, CA 95110.	Santa Clara County Planning Department, 70 West Hedding Street, San Jose, CA 95110.	*http://www.r9map.org/Docs/12-09-0752P-060337-102IAC.pdf.*	September 13, 2012	060337
Colorado:						
Adams	City of Thornton, (12–08–0500P).	The Honorable Heidi Williams, Mayor, City of Thornton, 9500 Civic Center Drive, Thornton, CO 80229.	9500 Civic Center Drive, Thornton, CO 80229.	*http://www.bakeraecom.com/index.php/colorado/adams/.*	November 2, 2012	080007

State and county	Location and case No.	Chief executive officer of community	Community map repository	Online location of Letter of Map Revision	Effective date of modification	Community No.
Adams	Unincorporated areas of Adams County, (12–08–0500P).	The Honorable W. R. ''Skip'' Fischer, Chairman, Adams County Board of Commissioners, 4430 South Adams County Parkway, 5th Floor, Suite C5000A, Brighton, CO 80601.	Adams County Public Works Department/Engineering Section, 4430 South Adams County Parkway, 1st Floor, Suite W2123, Brighton, CO 80601.	*http://www.bakeraecom.com/index.php/colorado/adams/.*	November 2, 2012	080001
Jefferson	City of Westminster, (12–08–0500P).	The Honorable Nancy McNally, Mayor, City of Westminster, 4800 West 92nd Avenue, Westminster, CO 80031.	4800 West 92nd Avenue, Westminster, CO 80031.	*http://www.bakeraecom.com/;index.php/colorado/adams/.*	November 2, 2012	080008
La Plata	City of Durango, (12–08–0287P).	The Honorable Doug Lyon, Mayor, City of Durango, 949 East 2nd Avenue, Durango, CO 81301.	Administrative Offices, 949 East 2nd Avenue, Durango, CO 81301.	*http://www.bakeraecom.com/index.php/colorado/laplata/.*	November 26, 2012	080099
Weld	Unincorporated areas of Weld County, (12–08–0303P).	The Honorable Sean Conway, Chairman, Weld County Board of Commissioners, P. O. Box 758, Greeley, CO 80632.	Weld County Public Works Department, 1111 H Street, Greely, CO 80632.	*http://www.bakeraecom.com/index.php/colorado/weld/.*	November 9, 2012	080266
Florida:						
Broward	City of Pompano Beach, (12–04–3737P).	The Honorable Lamar Fisher, Mayor, City of Pompano Beach, 100 West Atlantic Boulevard, Pompano Beach, FL 33060.	City Hall, Building Department, 100 West Atlantic Boulevard, 3rd Floor, West Wing, Pompano Beach, FL 33060.	*http://www.bakeraecom.com/index.php/florida/broward/.*	November 9, 2012	120055
Charlotte	Unincorporated areas of Charlotte County, (12–04–1172P).	The Honorable Christopher Constance, Chairman, Charlotte County Board of Commissioners, 18500 Murdock Circle, Port Charlotte, FL 33948.	Charlotte County Community Development Department, 18500 Murdock Circle, Port Charlotte, FL 33948.	*http://www.bakeraecom.com/index.php/florida/charlotte/.*	November 12, 2012	120061
Lee	City of Fort Myers, (12–04–4033P).	The Honorable Randy Henderson, Jr., Mayor, City of Fort Myers, 2200 2nd Street, Fort Myers, FL 33901.	Community Development Department, 1825 Hendry Street, Fort Myers, FL 33901.	*http://www.bakeraecom.com/index.php/florida/lee-5/.*	December 10, 2012	125106
Monroe	Unincorporated areas of Monroe County, (12–04–3601P).	The Honorable David Rice, Mayor, Monroe County, 1100 Simonton Street, Key West, FL 33040.	Monroe County Building Department, 2798 Overseas Highway, Marathon, FL 33050.	*http://www.bakeraecom.com/index.php/florida/monroe-3/.*	December 3, 2012	125129
Monroe	Unincorporated areas of Monroe County, (12–04–4205P).	The Honorable David Rice, Mayor, Monroe County, 1100 Simonton Street, Key West, FL 33040.	Monroe County Building Department, 2798 Overseas Highway, Marathon, FL 33050.	*http://www.bakeraecom.com/index.php/florida/monroe-3/.*	November 12, 2012	125129
Nassau	Unincorporated areas of Nassau County, (12–04–3609P).	The Honorable Daniel B. Leeper, Chairman, Nassau County Board of Commissioners, 96135 Nassau Place, Suite 1, Yulee, FL 32097.	96135 Nassau Place, Yulee, FL 32097.	*http://www.bakeraecom.com/index.php/florida/nassau.*	December 20, 2012	120170
Sumter	Unincorporated areas of Sumter County, (12–04–2558P).	The Honorable Garry Breeden, Chairman, Sumter County Board of Commissioners, 7375 Powell Road, Wildwood, FL 34785.	Sumter County Planning Department, 7375 Powell Road, Wildwood, FL 34785.	*http://www.bakeraecom.com/index.php/florida/sumter-2/.*	November 23, 2012	120296
Georgia:						
Fulton	City of Alpharetta, (11–04–5468P).	The Honorable David Belle Isle, Mayor, City of Alpharetta, 2 South Main Street, Alpharetta, GA 30009.	1790 Hembree Road, Alpharetta, GA 30009.	*http://www.bakeraecom.com/index.php/georgia/fulton/.*	November 23, 2012	130084
Muscogee	City of Columbus—Muscogee County (Consolidated Government), (12–04–1647P).	The Honorable Teresa Tomlinson, Mayor, City of Columbus—Muscogee County (Consolidated Government), 100 10th Street, Columbus, GA 31901.	420 10th Street, 2nd Floor, Columbus, GA 31901.	*http://www.bakeraecom.com/index.php/georgia/muskogee/.*	November 12, 2012	135158
Hawaii:						

State and county	Location and case No.	Chief executive officer of community	Community map repository	Online location of Letter of Map Revision	Effective date of modification	Community No.
Honolulu	City and County of Honolulu, (12–09–1556P).	The Honorable Peter B. Carlisle, Mayor, City and County of Honolulu, 530 South King Street, Room 300, Honolulu, HI 96813.	Department of Planning and Permitting, 650 South King Street, Honolulu, HI 96813.	*http://www.r9map.org/Docs/12-09-1556P-150001-102IAC.pdf.*	November 12, 2012	150001
Minnesota: Hennepin.	City of Crystal, (12–05–1144P).	The Honorable ReNae Bowman, Mayor, City of Crystal, 4141 Douglas Drive North, Crystal, MN 55422.	City Hall, 4141 Douglas Drive North, Crystal, MN 55422.	*http://www.starr-team.com/starr/LOMR/Pages/RegionV.aspx.*	December 24, 2012	270156
Nevada:						
Clark	Unincorporated areas of Clark County, (11–09–4118P).	The Honorable Susan Brager, Chair, Clark County Board of Commissioners, 500 South Grand Central Parkway, Las Vegas, NV 89155.	Clark County Department of Public Works, 500 South Grand Central Parkway, Las Vegas, NV 89155.	*http://www.r9map.org/Docs/11-09-4118P-320003-102IAC.pdf.*	December 3, 2012	320003
Clark	Unincorporated areas of Clark County, (12–09–0822P).	The Honorable Susan Brager, Chair, Clark County Board of Commissioners, 500 South Grand Central Parkway, Las Vegas, NV 89155.	Clark County Department of Public Works, 500 South Grand Central Parkway, Las Vegas, NV 89155.	*http://www.r9map.org/Docs/12-09-0822P-320003-102IAC.pdf.*	November 5, 2012	320003
Clark	Unincorporated areas of Clark County, (12–09–0994P).	The Honorable Susan Brager, Chair, Clark County Board of Commissioners, 500 South Grand Central Parkway, Las Vegas, NV 89155.	Clark County Department of Public Works, 500 South Grand Central Parkway, Las Vegas, NV 89155.	*http://www.r9map.org/Docs/12-09-0994P-320003-102DA.pdf.*	November 2, 2012	320003
Douglas	Unincorporated areas of Douglas County, (12–09–1513P).	The Honorable Lee Bonner, Chairman, Douglas County Board of Commissioners, P. O. Box 218, Minden, NV 89243.	Douglas County Public Works Department, 1615 8th Street, Minden, NV 89423.	*http://www.r9map.org/Docs/12-09-1513P-320008-102IAC.pdf.*	October 22, 2012	320008
New Mexico: Bernalillo.	City of Albuquerque, (12–06–1889P).	The Honorable Richard J. Berry, Mayor, City of Albuquerque, P.O. Box 1293, Albuquerque, NM 87103.	Development and Building Services Division, 600 2nd Street Northwest, Suite 201, Albuquerque, NM 87102.	*http://www.rampp-team.com/lomrs.htm.*	November 29, 2012	350002
New York: Westchester.	Village of Mamaroneck, (10–02–1072P).	The Honorable Norman S. Rosenblum, Mayor, Village of Mamaroneck, 123 Mamaroneck Avenue, Mamaroneck, NY 10543.	Building Department, 169 Mount Pleasant Avenue, 3rd Floor, Mamaroneck, NY 10543.	*http://www.rampp-team.com/lomrs.htm.*	December 19, 2012	360916
North Carolina:						
Durham	Unincorporated areas of Durham County, (11–04–0938P).	Mr. Mike Ruffin, Durham County Manager, 200 East Main Street, Durham, NC 27701.	Durham County Stormwater Services Division, 101 City Hall Plaza, Durham, NC 27701.	*http://www.ncfloodmaps.com/fhd.htm.*	November 9, 2012	370085
Stanly	Unincorporated areas of Stanly County, (12–04–0850P).	Mr. Andy Lucas, Stanly County Manager, 1000 North 1st Street, Albemarle, NC 28001.	Stanly County Planning and Zoning Department, 1000 North 1st Street, Albemarle, NC 28001.	*http://www.ncfloodmaps.com/fhd.htm.*	November 9, 2012	370361
Wake	Town of Fuquay-Varina, (11–04–7980P).	The Honorable John W. Byrne, Mayor, Town of Fuquay-Varina, 401 Old Honeycutt Road, Fuquay-Varina, NC 27526.	Engineering Department, 401 Old Honeycutt Road, Fuquay-Varina, NC 27526.	*http://www.ncfloodmaps.com/fhd.htm.*	December 13, 2012	370239
Oklahoma: Creek	Town of Kiefer, (12–06–0981P).	The Honorable West Ashford, Mayor, Town of Kiefer, P.O. Box 369, Kiefer, OK 74041.	City Hall, 401 East Indiana Avenue, Kiefer, OK 74041.	*http://www.rampp-team.com/lomrs.htm.*	December 24, 2012	400393
Pennsylvania: Dauphin.	Township of Susquehanna, (12–03–0513P).	The Honorable Frank Lynch, President, Township of Susquehanna Board of Commissioners, 1900 Linglestown Road, Harrisburg, PA 17110.	Susquehanna Township, 1900 Linglestown Road, Harrisburg, PA 17110.	*http://www.rampp-team.com/lomrs.htm.*	December 24, 2012	420397

State and county	Location and case No.	Chief executive officer of community	Community map repository	Online location of Letter of Map Revision	Effective date of modification	Community No.
South Carolina: Horry.	City of Myrtle Beach, (12–04–2445P).	The Honorable John Rhodes, Mayor, City of Myrtle Beach, P. O. Box 2468, Myrtle Beach, SC 29578.	City Services Building, 921 Oak Street, Myrtle Beach, SC 29577.	*http://www.bakeraecom.com/index.php/southcarolina/horry/.*	November 13, 2012	450109
Tennessee: Williamson.	City of Brentwood, (12–04–1585P).	The Honorable Paul L. Webb, Mayor, City of Brentwood, P.O. Box 788, Brentwood, TN 37024.	City Hall, 5211 Maryland Way, Brentwood, TN 37027.	*http://www.bakeraecom.com/index.php/tennessee/williamson/.*	November 12, 2012	470205
Texas:						
Bexar	City of San Antonio, (12–06–0886P).	The Honorable Julian Castro, Mayor, City of San Antonio, 100 Military Plaza, San Antonio, TX 78205.	Municipal Plaza, 114 West Commerce Street, 7th Floor, San Antonio, TX 78205.	*http://www.rampp-team.com/lomrs.htm.*	December 6, 2012	480045
Bexar	City of San Antonio, (12–06–0595P).	The Honorable Julian Castro, Mayor, City of San Antonio, 100 Military Plaza, San Antonio, TX 78205.	Municipal Plaza, 114 West Commerce Street, 7th Floor, San Antonio, TX 78205.	*http://www.rampp-team.com/lomrs.htm.*	December 13, 2012	480045
Bexar	Unincorporated areas of Bexar County, (12–06–1452P).	The Honorable Nelson W. Wolff, Bexar County Judge, Paul Elizondo Tower, 101 West Nueva Street, 10th Floor, San Antonio, TX 78205.	Public Works Department, 233 North Pecos, La Trinidad, Suite 420, San Antonio, TX 78207.	*http://www.rampp-team.com/lomrs.htm.*	December 6, 2012	480035
Collin	City of McKinney, (11–06–4743P).	The Honorable Brian Loughmiller, Mayor, City of McKinney, 222 North Tennessee Street, McKinney, TX 75069.	City Hall, 222 North Tennessee Street, McKinney, TX 75069.	*http://www.rampp-team.com/lomrs.htm.*	December 21, 2012	480135
Collin	City of Weston, (11–06–4743P).	The Honorable Patti Harrington, Mayor, City of Weston, 301 Main Street, Weston, TX 75097.	City Hall, 210 South McDonald Street, McKinney, TX 75069.	*http://www.rampp-team.com/lomrs.htm.*	December 21, 2012	481324
Collin	Unincorporated areas of Collin County, (11–06–4743P).	The Honorable Keith Self, Collin County Judge, 2300 Bloomdale Road, Suite 4192, McKinney, TX 75071.	Collin County Department of Public Works, 210 South McDonald Street, McKinney, TX 75069.	*http://www.rampp-team.com/lomrs.htm.*	December 21, 2012	480130
Dallas	City of Coppell, (11–06–4512P).	The Honorable Karen Hunt, Mayor, City of Coppell, 255 Parkway Boulevard, Coppell, TX 75019.	City Engineering Department, 255 Parkway Boulevard, Coppell, TX 75019.	*http://www.rampp-team.com/lomrs.htm.*	December 10, 2012	480170
Dallas and Denton.	City of Lewisville, (11–06–4512P).	The Honorable Dean Ueckert, Mayor, City of Lewisville, 151 West Church Street, Lewisville, TX 75029.	City Hall, 1197 West Main Street, Lewisville, TX 75067.	*http://www.rampp-team.com/lomrs.htm.*	December 10, 2012	480195
Dallas, Denton and Tarrant.	Town of Flower Mound, (11–06–4512P).	The Honorable Tom Hayden, Mayor, Town of Flower Mound, 2121 Cross Timbers Road, Flower Mound, TX 75028.	Town Hall, 2121 Cross Timbers Road, Flower Mound, TX 75028.	*http://www.rampp-team.com/lomrs.htm.*	December 10, 2012	480777
Denton	Town of Cross Roads, (12–06–0686P).	The Honorable Steve Smith, Mayor, Town of Cross Roads, 1401 Farm to Market Road 424, Cross Roads, TX 76227.	Town Hall, 1401 Farm to Market Road 424, Cross Roads, TX 76227.	*http://www.rampp-team.com/lomrs.htm.*	December 10, 2012	481513
Denton	Unincorporated areas of Denton County, (12–06–0686P).	The Honorable Mary Horn, Denton County Judge, 110 West Hickory Street, 2nd Floor, Denton, TX 76201.	Denton County Government Center, 1505 East McKinney Street, Suite 175, Denton, TX 76209.	*http://www.rampp-team.com/lomrs.htm.*	December 10, 2012	480774
Denton and Tarrant.	City of Grapevine, (11–06–4512P).	The Honorable William D. Tate, Mayor, City of Grapevine, P.O. Box 95104, Grapevine ,TX 76099.	City Hall, 200 South Main Street, Grapevine, TX 76051.	*http://www.rampp-team.com/lomrs.htm.*	December 10, 2012	480598
Harris	City of Pearland, (12–06–1209P).	The Honorable Tom Reid, Mayor, City of Pearland, 3519 Liberty Drive, Pearland, TX 77581.	3519 Liberty Drive, Pearland, TX 77581.	*http://www.rampp-team.com/lomrs.htm.*	November 8, 2012	480077

State and county	Location and case No.	Chief executive officer of community	Community map repository	Online location of Letter of Map Revision	Effective date of modification	Community No.
Travis	City of Austin, (11–06–4564P).	The Honorable Lee Leffingwell, Mayor, City of Austin, P.O. Box 1088, Austin, TX 78701.	Watershed Protection Department, 505 Barton Springs Road, 12th Floor, Austin, TX 78704.	*http://www.rampp-team.com/lomrs.htm.*	December 3, 2012	480624
Travis	City of Austin, (12–06–1380P).	The Honorable Lee Leffingwell, Mayor, City of Austin, P.O. Box 1088, Austin, TX 78767.	Watershed Protection Department, 505 Barton Springs Road, 12th Floor, Austin, TX 78704.	*http://www.rampp-team.com/lomrs.htm.*	December 10, 2012	480624
Wilson	Unincorporated areas of Wilson County, (12–06–2559P).	The Honorable Marvin Quinney, Wilson County Judge, 1103 4th Street, Floresville, TX 78114.	1420 3rd Street, Floresville, TX 78114.	*http://www.rampp-team.com/lomrs.htm.*	December 20, 2012	480230
Virginia:						
Arlington	Unincorporated areas of Arlington County, (12–03–0954P).	The Honorable Mary Hughes Hynes, Chair, Arlington County Board, 2100 Clarendon Boulevard, Arlington, VA 22201.	2100 Clarendon Boulevard, Arlington, VA 22201.	*http://www.rampp-team.com/lomrs.htm.*	December 17, 2012	515520
Henrico	Unincorporated areas of Henrico County, (12–03–0257P).	The Honorable Frank J. Thornton, Chairman, Henrico County Board of Supervisors, P.O. Box 90775, Henrico, VA 23273.	Henrico County Courthouse, 4301 East Parham Road, Richmond, VA 23229.	*http://www.rampp-team.com/lomrs.htm.*	December 12, 2012	510077

(Catalog of Federal Domestic Assistance No. 97.022, ''Flood Insurance.'')

Dated: November 9, 2012.

James A. Walke,

Acting Deputy Associate Administrator for Mitigation, Department of Homeland Security, Federal Emergency Management Agency.

[FR Doc. 2012–29700 Filed 12–7–12; 8:45 am]

BILLING CODE 9110–12–P

DEPARTMENT OF HOMELAND SECURITY

Federal Emergency Management Agency

[Docket ID FEMA–2012–0003; Internal Agency Docket No. FEMA–B–1277]

Changes in Flood Hazard Determinations

AGENCY: Federal Emergency Management Agency, DHS.

ACTION: Notice.

SUMMARY: This notice lists communities where the addition or modification of Base Flood Elevations (BFEs), base flood depths, Special Flood Hazard Area (SFHA) boundaries or zone designations, or the regulatory floodway (hereinafter referred to as flood hazard determinations), as shown on the Flood Insurance Rate Maps (FIRMs), and where applicable, in the supporting Flood Insurance Study (FIS) reports, prepared by the Federal Emergency Management Agency (FEMA) for each community, is appropriate because of new scientific or technical data. The FIRM, and where applicable, portions of the FIS report, have been revised to reflect these flood hazard determinations through issuance of a Letter of Map Revision (LOMR), in accordance with Title 44, Part 65 of the Code of Federal Regulations (44 CFR Part 65). The LOMR will be used by insurance agents and others to calculate appropriate flood insurance premium rates for new buildings and the contents of those buildings. For rating purposes, the currently effective community number is shown in the table below and must be used for all new policies and renewals.

DATES: These flood hazard determinations will become effective on the dates listed in the table below and revise the FIRM panels and FIS report in effect prior to this determination for the listed communities.

From the date of the second publication of notification of these changes in a newspaper of local circulation, any person has ninety (90) days in which to request through the community that the Deputy Associate Administrator for Mitigation reconsider the changes. The flood hazard determination information may be changed during the 90-day period.

ADDRESSES: The affected communities are listed in the table below. Revised flood hazard information for each community is available for inspection at both the online location and the respective community map repository address listed in the table below. Additionally, the current effective FIRM and FIS report for each community are accessible online through the FEMA Map Service Center at *www.msc.fema.gov* for comparison.

Submit comments and/or appeals to the Chief Executive Officer of the community as listed in the table below.

FOR FURTHER INFORMATION CONTACT: Luis Rodriguez, Chief, Engineering Management Branch, Federal Insurance and Mitigation Administration, FEMA, 500 C Street SW., Washington, DC 20472, (202) 646–4064, or (email) *Luis.Rodriguez3@fema.dhs.gov;* or visit the FEMA Map Information eXchange (FMIX) online at *www.floodmaps.fema.gov/fhm/fmx_main.html.*

SUPPLEMENTARY INFORMATION: The specific flood hazard determinations are not described for each community in this notice. However, the online location and local community map repository address where the flood hazard determination information is available for inspection is provided.

Any request for reconsideration of flood hazard determinations must be submitted to the Chief Executive Officer of the community as listed in the table below.

The modifications are made pursuant to section 201 of the Flood Disaster Protection Act of 1973, 42 U.S.C. 4105, and are in accordance with the National Flood Insurance Act of 1968, 42 U.S.C. 4001 *et seq.,* and with 44 CFR Part 65.

The FIRM and FIS report are the basis of the floodplain management measures that the community is required either to adopt or to show evidence of having in effect in order to qualify or remain

qualified for participation in the National Flood Insurance Program (NFIP).

These flood hazard determinations, together with the floodplain management criteria required by 44 CFR 60.3, are the minimum that are required. They should not be construed to mean that the community must change any existing ordinances that are more stringent in their floodplain management requirements. The community may at any time enact stricter requirements of its own or pursuant to policies established by other Federal, State, or regional entities. The flood hazard determinations are in accordance with 44 CFR 65.4.

The affected communities are listed in the following table. Flood hazard determination information for each community is available for inspection at both the online location and the respective community map repository address listed in the table below. Additionally, the current effective FIRM and FIS report for each community are accessible online through the FEMA Map Service Center at *www.msc.fema.gov* for comparison.

State and county	Location and case No.	Chief executive officer of community	Community map repository	Online location of letter of map revision	Effective date of modification	Community No.
Alabama:						
Jefferson	City of Pinson (12–04–3890P).	The Honorable Hoyt Sanders, Mayor, City of Pinson, City Hall, 4410 Main Street, Pinson, AL 35126.	City Hall, 4410 Main Street, Pinson, AL 35126.	*http://www.bakeraecom.com/index.php/alabama/jefferson-3/.*	December 17, 2012	010447
Jefferson	Unincorporated areas of Jefferson County (12–04–3890P).	The Honorable David Carrington, President, Jefferson County Commission, 716 Richard Arrington, Jr. Boulevard North, Birmingham, AL 35203.	Jefferson County Courthouse, Land Development Office, 716 North 21st Street, Room 202A, Birmingham, AL 35263.	*http://www.bakeraecom.com/index.php/alabama/jefferson-3/.*	December 17, 2012	010217
Mobile	City of Mobile (12–04–4167P).	The Honorable Samuel L. Jones, Mayor, City of Mobile, P. O. Box 1827, Mobile, AL 36633.	City Hall, Engineering Department, 205 Government Street, 3rd Floor, Mobile, AL 36644.	*http://www.bakeraecom.com/index.php/alabama/mobile/.*	December 28, 2012	015007
Mobile	Unincorporated areas of Mobile County (12–04–0467P).	The Honorable Connie Hudson, President, Mobile County Commission, P. O. Box 1443, Mobile, AL 36633.	Mobile County, Government Plaza, Engineering Department, 205 Government Street, 3rd Floor, South Tower, Mobile, AL 36644.	*http://www.bakeraecom.com/index.php/alabama/mobile/.*	December 7, 2012	015008
Mobile	Unincorporated areas of Mobile County (12–04–0468P).	The Honorable Connie Hudson, President, Mobile County Commission, P. O. Box 1443, Mobile, AL 36633.	Mobile County, Government Plaza, Engineering Department, 205 Government Street, 3rd Floor, South Tower, Mobile, AL 36644.	*http://www.bakeraecom.com/index.php/alabama/mobile/.*	December 7, 2012	015008
Mobile	Unincorporated areas of Mobile County (12–04–0469P).	The Honorable Connie Hudson, President, Mobile County Commission, P. O. Box 1443, Mobile, AL 36633.	Mobile County Government Plaza, Engineering Department, 205 Government Street, 3rd Floor, South Tower, Mobile, AL 36644.	*http://www.bakeraecom.com/index.php/alabama/mobile/.*	December 7, 2012	015008
Mobile	Unincorporated areas of Mobile County (12–04–0470P).	The Honorable Connie Hudson, President, Mobile County Commission, P. O. Box 1443, Mobile, AL 36633.	Mobile County, Government Plaza, Engineering Department, 205 Government Street, 3rd Floor, South Tower, Mobile, AL 36644.	*http://www.bakeraecom.com/index.php/alabama/mobile/.*	December 7, 2012	015008
Arizona:						
Coconino	City of Flagstaff (11–09–4084P).	The Honorable Jerry Nabours, Mayor, City of Flagstaff, 211 West Aspen Avenue, Flagstaff, AZ 86001.	City Hall, Utilities Department, 211 West Aspen Avenue, Flagstaff, AZ 86001.	*http://www.r9map.org/Docs/11-09-4084P-040020-102IC.pdf.*	November 19, 2012	040020
Coconino	City of Flagstaff (12–09–1657P).	The Honorable Jerry Nabours, Mayor, City of Flagstaff, 211 West Aspen Avenue, Flagstaff, AZ 86001.	City Hall, Utilities Department, 211 West Aspen Avenue, Flagstaff, AZ 86001.	*http://www.r9map.org/Docs/12-09-1657P-040020-102IAC.pdf.*	November 12, 2012	040020
Maricopa	City of Avondale (12–09–1467P).	The Honorable Marie Lopez Rogers, Mayor, City of Avondale, 11465 West Civic Center Drive, Avondale, AZ 85323.	1225 South 4th Street, Avondale, AZ 85323.	*http://www.r9map.org/Docs/12-09-1467P-040038-102IAC.pdf.*	November 30, 2012	040038
Maricopa	City of Goodyear (12–09–1467P).	The Honorable Georgia Lord, Mayor, City of Goodyear, 190 North Litchfield Road, Goodyear, AZ 85338.	119 North Litchfield Road, Goodyear, AZ 85338.	*http://www.r9map.org/Docs/12-09-1467P-040046-102IAC.pdf.*	November 30, 2012	040046

State and county	Location and case No.	Chief executive officer of community	Community map repository	Online location of letter of map revision	Effective date of modification	Community No.
Maricopa	Unincorporated areas of Maricopa County (12–09–1467P).	The Honorable Max Wilson, Chair, Maricopa County Board of Supervisors, 301 West Jefferson Street, Phoenix, AZ 85003.	2801 West Durango Street, Phoenix, AZ 85009.	*http://www.r9map.org/Docs/12-09-1467P-040037-102IAC.pdf.*	November 30, 2012	040037
Maricopa	Unincorporated areas of Maricopa County (12–09–1031P).	The Honorable Max Wilson, Chair, Maricopa County, Board of Supervisors, 301 West Jefferson Street, Phoenix, AZ 85003.	2801 West Durango Street, Phoenix, AZ 85009.	*http://www.r9map.org/Docs/12-09-1031P-040037-102IAC.pdf.*	December 7, 2012	040037
Pinal	Unincorporated areas of Pinal County (12–09–1236P).	The Honorable David Snider, Chairman, Pinal County Board of Supervisors, P.O. Box 827, Florence, AZ 85132.	Pinal County Engineering Department, 31 North Pinal Street, Building F Florence, AZ 85232.	*http://www.r9map.org/Docs/12-09-1236P-040077-102IAC.pdf.*	January 7, 2013	040077
Yavapai	Town of Camp Verde (12–09–1430P).	The Honorable Bob Burnside, Mayor, Town of Camp Verde, 473 South Main Street, Suite 102, Camp Verde, AZ 86322.	Town Clerk's Office, 473 South Main Street, Room 102, Camp Verde, AZ 86322.	*http://www.r9map.org/Docs/12-09-1430P-040131-102IAC.pdf.*	December 31, 2012	040131
California:						
Orange	City of Irvine (12–09–1694P).	The Honorable Sukhee Kang, Mayor, City of Irvine, 1 Civic Center Plaza, Irvine, CA 92606.	1 Civic Center Plaza, Irvine, CA 92606.	*http://www.r9map.org/Docs/12-09-1694P-060222-102IAC.pdf.*	November 7, 2012	060222
San Diego	City of Oceanside (12–09–1206P).	The Honorable Jim Wood, Mayor, City of Oceanside, 300 North Coast Highway, Oceanside, CA 92054.	City Hall, Planning Department, 300 North Coast Highway, Oceanside, CA 92054.	*http://www.r9map.org/Docs/12-09-1206P-060294-102IAC.pdf.*	December 31, 2012	060294
San Diego	City of San Diego (12–09–2141P).	The Honorable Jerry Sanders, Mayor, City of San Diego, 202 C Street, 11th Floor, San Diego, CA 92101.	Executive Complex, 1010 2nd Avenue, Suite 100, San Diego, CA 92101.	*http://www.r9map.org/Docs/12-09-2141P-060295-102IAC.pdf.*	December 17, 2012	060295
San Diego	Unincorporated areas of San Diego County (12–09–0511P).	The Honorable Ron Roberts, Chairman, San Diego County Board of Supervisors, 1600 Pacific Highway, Room 335, San Diego, CA 92101.	San Diego County Department of Public Works, 5201 Ruffin Road, Suite P, San Diego, CA 92123.	*http://www.r9map.org/Docs/12-09-0511P-060284-102IAC.pdf.*	December 3, 2012	060284
Colorado:						
Denver	City and County of Denver (12–08–0474P).	The Honorable Michael B. Hancock, Mayor, City and County of Denver, 1437 Bannock Street, Suite 350, Denver, CO 80202.	Public Works Department, 201 West Colfax Avenue, Denver, CO 80202.	*http://www.bakeraecom.com/index.php/colorado/denver/.*	December 17, 2012	080046
Denver	City and County of Denver (12–08–0552P).	The Honorable Michael B. Hancock, Mayor, City and County of Denver, 1437 Bannock Street, Suite 350, Denver, CO 80202.	Public Works Department, 201 West Colfax Avenue, Denver, CO 80202.	*http://www.bakeraecom.com/index.php/colorado/denver/.*	December 17, 2012	080046
El Paso	City of Colorado Springs (12–08–0168P).	The Honorable Stephen G. Bach, Mayor, City of Colorado Springs, 30 South Nevada Avenue, Suite 601, Colorado Springs, CO 80903.	City Administration Department, 30 South Nevada Avenue, Colorado Springs, CO 80903.	*http://www.bakeraecom.com/index.php/colorado/el-paso/.*	January 4, 2013	080060
El Paso	City of Fountain (12–08–0499P).	The Honorable Jeri Howells, Mayor, City of Fountain, 116 South Main Street, Fountain, CO 80817.	116 South Main Street, Fountain, CO 80817.	*http://www.bakeraecom.com/index.php/colorado/el-paso/.*	December 12, 2012	080061
El Paso	Unincorporated areas of El Paso County (12–08–0168P).	The Honorable Amy Lathen, Chair, El Paso County Board of Commissioners, 200 South Cascade Avenue, Suite 100, Colorado Springs, CO 80903.	El Paso County Regional Building Department, 2880 International Circle, Colorado Springs, CO 80910.	*http://www.bakeraecom.com/index.php/colorado/el-paso/.*	January 4, 2013	080059

State and county	Location and case No.	Chief executive officer of community	Community map repository	Online location of letter of map revision	Effective date of modification	Community No.
El Paso	Unincorporated areas of El Paso County (12–08–0499P).	The Honorable Amy Lathen, Chair, El Paso County Board of Commissioners, 200 South Cascade Avenue, Suite 100, Colorado Springs, CO 80903.	El Paso County Building Department, 2880 International Circle, Colorado Springs, CO 80910.	*http://www.bakeraecom.com/index.php/colorado/el-paso/.*	December 12, 2012	080059
Connecticut:						
New Haven	City of Meriden (11–01–2893P).	The Honorable Michael S. Rohde, Mayor, City of Meriden, 142 East Main Street, Meriden, CT 06450.	142 East Main Street Meriden, CT 06450.	*http://www.starr-team.com/starr/LOMR/Pages/RegionI.aspx.*	December 7, 2012	090081
New Haven	City of New Haven (11–01–2488P).	The Honorable John Destefano, Jr., Mayor, City of New Haven, 165 Church Street, New Haven, CT 06510.	200 Orange Street, New Haven, CT 06510.	*http://www.starr-team.com/starr/LOMR/Pages/RegionI.aspx.*	October 5, 2012	090084
New Haven	Town of East Haven (11–01–2488P).	The Honorable Joseph Maturo, Jr., Mayor, Town of East Haven, 250 Main Street, East Haven, CT 06512.	461 North High Street, East Haven, CT 06512.	*http://www.starr-team.com/starr/LOMR/Pages/RegionI.aspx.*	October 5, 2012	090076
Florida:						
Monroe	Village of Islamorada (12–04–3438P).	The Honorable Ken Philipson, Mayor, Village of Islamorada Council, 86800 Overseas Highway, Islamorada, FL 33036.	Village Hall, 87000 Overseas Highway, Islamorada, FL 33036.	*http://www.bakeraecom.com/index.php/florida/monroe-3/.*	December 31, 2012	120424
Orange	City of Orlando (12–04–2707P).	The Honorable Buddy Dyer, Mayor, City of Orlando, P.O. Box 4990, Orlando, FL 32808.	Permitting Services, 400 South Orange Avenue, Orlando, FL 32301.	*http://www.bakeraecom.com/index.php/florida/orange-2/.*	December 31, 2012	120186
Orange	Unincorporated areas of Orange County (12–04–2707P).	The Honorable Teresa Jacobs, Mayor, Orange County, 201 South Rosalind Avenue, 5th Floor, Orlando, FL 32801.	Orange County Stormwater Management Department, 4200 South John Young Parkway, Orlando, FL 32839.	*http://www.bakeraecom.com/index.php/florida/orange-2/.*	December 31, 2012	120179
Seminole	City of Lake Mary (12–04–5487P).	The Honorable David Mealor, Mayor, City of Lake Mary, 911 Wallace Court, Lake Mary, FL 32746.	Engineering Department, 100 North Country Club Road, Lake Mary, FL 32746.	*http://www.bakeraecom.com/index.php/florida/seminole-2/.*	December 31, 2012	120416
St. Johns	Unincorporated areas of St. Johns County (12–04–5869P).	The Honorable Mark P. Miner, Chairman, St. Johns County Board of Commissioners, 500 San Sebastian View, St. Augustine, FL 32084.	St. Johns County Administration Building, 4020 Lewis Speedway, St. Augustine, FL 32084.	*http://www.bakeraecom.com/index.php/uncategorized/st-johns/.*	December 31, 2012	125147
Sumter	Unincorporated areas of Sumter County (12–04–3513P).	The Honorable Garry Breeden, Chairman, Sumter County Board of Commissioners, 7375 Powell Road, Wildwood, FL 34785.	Sumter County Planning Department, 7375 Powell Road, Wildwood, FL 34785.	*http://www.bakeraecom.com/index.php/florida/sumter-2/.*	December 28, 2012	120296
Sumter	Unincorporated areas of Sumter County (12–04–3721P).	The Honorable Garry Breeden, Chairman, Sumter County Board of Commissioners, 7375 Powell Road, Wildwood, FL 34785.	Sumter County Planning Department, 7375 Powell Road, Wildwood, FL 34785.	*http://www.bakeraecom.com/index.php/florida/sumter-2/.*	December 28, 2012	120296
Walton	Unincorporated areas of Walton County (12–04–0761P).	The Honorable Scott Brannon, Chairman, Walton County Board of Commissioners, 415 State Highway, 20 Freeport, FL 32439.	Walton County Courthouse Annex, 47 North 6th Street, DeFuniak Springs, FL 32435.	*http://www.bakeraecom.com/index.php/florida/walton/.*	December 14, 2012	120317
Georgia:						
Chatham	City of Savannah (12–04–3661P).	The Honorable Otis Johnson, Mayor, City of Savannah, P.O. Box 1027, Savannah, GA 31402.	City Hall, 2 East Bay Street, Savannah, GA 31401.	*http://www.bakeraecom.com/index.php/georgia/chatham/.*	December 10, 2012	135163

State and county	Location and case No.	Chief executive officer of community	Community map repository	Online location of letter of map revision	Effective date of modification	Community No.
Colquitt	Unincorporated areas of Colquitt County (12–04–5279P).	The Honorable John B. Alderman, Chairman, Colquitt County Board of Commissioners, P. O. Box 517, Moultrie, GA 31776.	Colquitt County Compliance Office, 101 East Central Avenue, Suite 168, Moultrie, GA 31768.	*http://www.bakeraecom.com/index.php/georgia/colquitt/.*	January 3, 2013	130058
Columbia	Unincorporated areas of Columbia County (12–04–3178P).	The Honorable Ron C. Cross, Chairman, Columbia County Board of Commissioners, P. O. Box 498, Evans, GA 30809.	Columbia County Development Services Division, Engineering Services Department, 630 Ronald Regan Drive, Building A, Evans, GA 30809.	*http://www.bakeraecom.com/index.php/georgia/columbia-2/.*	December 27, 2012	130059
Muscogee	City of Columbus—Muscogee County (Consolidated Government) (12–04–1268P).	The Honorable Teresa Tomlinson, Mayor, City of Columbus—Muscogee County (Consolidated Government), 100 10th Street, Columbus, GA 31901.	Engineering Department, 420 10th Street, 2nd Floor, Columbus, GA 31901.	*http://www.bakeraecom.com/index.php/georgia/muskogee/.*	September 24, 2012	135158
Idaho:						
Ada	City of Eagle (12–10–0460P).	The Honorable Jim Reynolds, Mayor, City of Eagle, 660 East Civic Lane, Eagle, ID 83616.	660 East Civic Lane, Eagle, ID 83616.	*http://www.starr-team.com/starr/LOMR/Pages/RegionX.aspx.*	October 5, 2012	160003
Ada	Unincorporated areas of Ada County (12–10–0460P).	The Honorable Rick Yzaguirre, Chairman, Ada County Board of Commissioners, 200 West Front Street, Boise, ID 83702.	200 West Front Street, Boise, ID 83702.	*http://www.starr-team.com/starr/LOMR/Pages/RegionX.aspx.*	October 5, 2012	160001
Illinois:						
DuPage	City of Elmhurst (12–05–5094P).	The Honorable Peter P. DiCianni, Mayor, City of Elmhurst, 209 North York Street, Elmhurst, IL 60126.	209 North York Street, Elmhurst, IL 60126.	*http://www.starr-team.com/starr/LOMR/Pages/RegionV.aspx.*	November 30, 2012	170205
Kane	City of Aurora (12–05–2993P).	The Honorable Thomas Weisner, Mayor, City of Aurora, 44 East Downer Place, Aurora, IL 60507.	44 East Downer Place, Aurora, IL 60507.	*http://www.starr-team.com/starr/LOMR/Pages/RegionV.aspx.*	November 16, 2012	170320
Indiana:						
Allen	Unincorporated areas of Allen County (12–05–1513P).	The Honorable Nelson Peters, President, Allen County Board of Commissioners, 200 East Berry Street, Suite 410, Fort Wayne, IN 46802.	1 East Main Street, Room 630, Fort Wayne, IN 46802.	*http://www.starr-team.com/starr/LOMR/Pages/RegionV.aspx.*	November 13, 2012	180302
Lake	City of New Haven (12–05–1513P).	The Honorable Terry E. McDonald, Mayor, City of New Haven, 815 Lincoln Highway East, New Haven, IN 46774.	815 Lincoln Highway East, New Haven, IN 46774.	*http://www.starr-team.com/starr/LOMR/Pages/RegionV.aspx.*	November 13, 2012	180004
Lake	City of Hobart (12–05–0788P).	The Honorable Brian K. Snedecor, Mayor, City of Hobart, 414 Main Street, Hobart, IN 46342.	414 Main Street, Hobart, IN 46342.	*http://www.starr-team.com/starr/LOMR/Pages/RegionV.aspx.*	December 3, 2012	180136
Kansas:						
Johnson	City of Fairway (11–07–3430P).	The Honorable Jerry Wiley, Mayor, City of Fairway, 4210 Shawnee Mission Parkway, Suite 100, Fairway, KS 66205.	5252 Beliner Road, Fairway, KS 66205.	*http://www.starr-team.com/starr/LOMR/Pages/RegionVII.aspx.*	November 14, 2012	205185
Johnson	City of Roeland Park (11–07–3422P).	The Honorable Adrienne Foster, Mayor, City of Roeland Park, 4600 West 51st Street, Roeland Park, KS 66205.	4600 West 51st Street, Roeland Park, KS 66205.	*http://www.starr-team.com/starr/LOMR/Pages/RegionVII.aspx.*	November 7, 2012	200176
Johnson	City of Roeland Park (11–07–3430P).	The Honorable Adrienne Foster, Mayor, City of Roeland Park, 4600 West 51st Street, Roeland Park, KS 66205.	4600 West 51st Street, Roeland Park, KS 66205.	*http://www.starr-team.com/starr/LOMR/Pages/RegionVII.aspx.*	November 14, 2012	200176
Maine:						

State and county	Location and case No.	Chief executive officer of community	Community map repository	Online location of letter of map revision	Effective date of modification	Community No.
Cumberland	City of Portland (12–01–0692P).	The Honorable Michael Brennan, Mayor, City of Portland, 389 Congress Street, Portland, ME 04101.	389 Congress Street, Room 315 Portland, ME 04101.	*http://www.starr-team.com/starr/LOMR/Pages/RegionI.aspx.*	November 9, 2012	230051
Penobscot	Town of Hermon (12–01–0085P).	The Honorable Tim McCluskey, Chairman, Town of Hermon Council, 333 Billings Road, Hermon, ME 04401.	333 Billings Road, Hermon, ME 04401.	*http://www.starr-team.com/starr/LOMR/Pages/RegionI.aspx.*	October 12, 2012 ...	230389
Washington ..	Town of Milbridge (12–01–1740P).	The Honorable Lewis M. Pinkham, Town Manager, Town of Milbridge, 22 School Street, Milbridge, ME 04658.	22 School Street, Milbridge, ME 04658.	*http://www.starr-team.com/starr/LOMR/Pages/RegionI.aspx.*	December 19, 2012	230142
Nevada:						
Clark	City of Henderson (11–09–3331P).	The Honorable Andy A. Hafen, Mayor, City of Henderson, P.O. Box 95050, Henderson, NV 89009.	City Hall, Public Works Department, 240 Water Street, Henderson, NV 89015.	*http://www.r9map.org/Docs/11-09-3331P-320005-102IC.pdf.*	December 14, 2012	320005
Clark	City of Henderson (12–09–2303P).	The Honorable Andy A. Hafen, Mayor, City of Henderson, P.O. Box 95050, Henderson, NV 89009.	City Hall, Public Works Department, 240 Water Street, Henderson, NV 89015.	*http://www.r9map.org/Docs/12-09-2303P-320005-102IC.pdf.*	December 14, 2012	320005
Clark	City of Mesquite (11–09–4157P).	The Honorable Mark Wier, Mayor, City of Mesquite, 10 East Mesquite Boulevard, Mesquite, NV 89027.	City Engineer's Office, 10 East Mesquite Boulevard, Mesquite, NV 89027.	*http://www.r9map.org/Docs/11-09-4157P-320035-102IAC.pdf.*	December 14, 2012	320035
Clark	City of Mesquite (12–09–0907P).	The Honorable Mark Wier, Mayor, City of Mesquite, 10 East Mesquite Boulevard, Mesquite, NV 89027.	City Engineer's Office, 10 East Mesquite Boulevard, Mesquite, NV 89027.	*http://www.r9map.org/Docs/12-09-0907P-320035-102IC.pdf.*	December 28, 2012	320035
North Carolina:						
Mecklenburg	Town of Davidson (12–04–0595P).	The Honorable John Woods, Mayor, Town of Davidson, 216 South Main Street, Davidson, NC 28036.	Charlotte-Mecklenburg Stormwater Services Division, 700 North Tryon Street, Charlotte, NC 28202.	*http://www.bakeraecom.com/index.php/northcarolina/mecklenburg-pmr-2/.*	December 3, 2012	370503
Mecklenburg	Unincorporated areas of Mecklenburg County (12–04–0595P).	The Honorable Harry L. Jones, Sr., Mecklenburg County Manager, Government Center, 600 East 4th Street, Charlotte, NC 28202.	Charlotte-Mecklenburg Stormwater Services Division, 700 North Tryon Street, Charlotte, NC 28202.	*http://www.bakeraecom.com/index.php/northcarolina/mecklenburg-pmr-2/.*	December 3, 2012	370158
South Carolina:						
Anderson	City of Anderson (12–04–0672P).	The Honorable Terrence Roberts, Mayor, City of Anderson, 401 South Main Street, Anderson, SC 29624.	City Hall, 401 South Main Street, Anderson, SC 29624.	*http://www.bakeraecom.com/index.php/southcarolina/anderson/.*	December 24, 2012	450014
Anderson	Unincorporated areas of Anderson County (12–04–0672P).	The Honorable Tom Allen, Chairman, Anderson County Council, P.O. Box 8002, Anderson, SC 29621.	Anderson County Courthouse, 101 South Main Street, Anderson, SC 29624.	*http://www.bakeraecom.com/index.php/southcarolina/anderson/.*	December 24, 2012	450013
Laurens	Unincorporated areas of Laurens County (12–04–2186P).	The Honorable James A. Coleman, Chairman, Laurens County Council, P.O. Box 445, Laurens, SC 29360.	Laurens County Courthouse, 3 Catherine Street, Laurens, SC 29360.	*http://www.bakeraecom.com/index.php/southcarolina/laurens/.*	December 6, 2012	450122

(Catalog of Federal Domestic Assistance No. 97.022, ''Flood Insurance.'')

Dated: November 8, 2012.

James A. Walke,

Acting Deputy Associate Administrator for Mitigation, Department of Homeland Security, Federal Emergency Management Agency.

[FR Doc. 2012–29681 Filed 12–7–12; 8:45 am]

BILLING CODE 9110–12–P

DEPARTMENT OF HOMELAND SECURITY

Federal Emergency Management Agency

[Internal Agency Docket No. FEMA–3355–EM; Docket ID FEMA–2012–0002]

Rhode Island; Amendment No. 1 to Notice of an Emergency Declaration

AGENCY: Federal Emergency Management Agency, DHS.

ACTION: Notice.

SUMMARY: This notice amends the notice of an emergency declaration for the State of Rhode Island (FEMA–3355–EM), dated October 29, 2012, and related determinations.

DATED: *Effective Date:* November 8, 2012.

FOR FURTHER INFORMATION CONTACT: Peggy Miller, Office of Response and Recovery, Federal Emergency Management Agency, 500 C Street SW., Washington, DC 20472, (202) 646–3886.

SUPPLEMENTARY INFORMATION: Notice is hereby given that the incident period for this emergency is closed effective November 8, 2012.

The following Catalog of Federal Domestic Assistance Numbers (CFDA) are to be used for reporting and drawing funds: 97.030, Community Disaster Loans; 97.031, Cora Brown Fund; 97.032, Crisis Counseling; 97.033, Disaster Legal Services; 97.034, Disaster Unemployment Assistance (DUA); 97.046, Fire Management Assistance Grant; 97.048, Disaster Housing Assistance to Individuals and Households in Presidentially Declared Disaster Areas; 97.049, Presidentially Declared Disaster Assistance—Disaster Housing Operations for Individuals and Households; 97.050, Presidentially Declared Disaster Assistance to Individuals and Households—Other Needs; 97.036, Disaster Grants—Public Assistance (Presidentially Declared Disasters); 97.039, Hazard Mitigation Grant.

W. Craig Fugate,

Administrator, Federal Emergency Management Agency.

[FR Doc. 2012–29676 Filed 12–7–12; 8:45 am]

BILLING CODE 9111–23–P

DEPARTMENT OF HOMELAND SECURITY

Federal Emergency Management Agency

[Internal Agency Docket No. FEMA–3352–EM; Docket ID FEMA–2012–0002]

District of Columbia; Amendment No. 2 to Notice of an Emergency Declaration

AGENCY: Federal Emergency Management Agency, DHS.

ACTION: Notice.

SUMMARY: This notice amends the notice of an emergency declaration for the District of Columbia (FEMA–3352–EM), dated October 28, 2012, and related determinations.

DATES: *Effective Date:* November 8, 2012.

FOR FURTHER INFORMATION CONTACT: Peggy Miller, Office of Response and Recovery, Federal Emergency Management Agency, 500 C Street SW., Washington, DC 20472, (202) 646–3886.

SUPPLEMENTARY INFORMATION: The notice of an emergency declaration for the District of Columbia is hereby amended to include the following areas among those areas determined to have been adversely affected by the event declared an emergency by the President in his declaration of October 28, 2012.

The District of Columbia for emergency protective measures (Category B), including direct federal assistance, under the Public Assistance program.

The following Catalog of Federal Domestic Assistance Numbers (CFDA) are to be used for reporting and drawing funds: 97.030, Community Disaster Loans; 97.031, Cora Brown Fund; 97.032, Crisis Counseling; 97.033, Disaster Legal Services; 97.034, Disaster Unemployment Assistance (DUA); 97.046, Fire Management Assistance Grant; 97.048, Disaster Housing Assistance to Individuals and Households in Presidentially Declared Disaster Areas; 97.049, Presidentially Declared Disaster Assistance—Disaster Housing Operations for Individuals and Households; 97.050, Presidentially Declared Disaster Assistance to Individuals and Households—Other Needs; 97.036, Disaster Grants—Public Assistance (Presidentially Declared Disasters); 97.039, Hazard Mitigation Grant.

W. Craig Fugate,

Administrator, Federal Emergency Management Agency.

[FR Doc. 2012–29659 Filed 12–7–12; 8:45 am]

BILLING CODE 9111–23–P

DEPARTMENT OF HOMELAND SECURITY

Federal Emergency Management Agency

[Internal Agency Docket No. FEMA–3352–EM; Docket ID FEMA–2012–0002]

District of Columbia; Amendment No. 3 to Notice of an Emergency Declaration

AGENCY: Federal Emergency Management Agency, DHS.

ACTION: Notice.

SUMMARY: This notice amends the notice of an emergency declaration for the District of Columbia (FEMA–3352–EM), dated October 28, 2012, and related determinations.

DATES: *Effective Date:* October 31, 2012.

FOR FURTHER INFORMATION CONTACT: Peggy Miller, Office of Response and Recovery, Federal Emergency Management Agency, 500 C Street SW., Washington, DC 20472, (202) 646–3886.

SUPPLEMENTARY INFORMATION: Notice is hereby given that the incident period for this emergency is closed effective October 31, 2012.

The following Catalog of Federal Domestic Assistance Numbers (CFDA) are to be used for reporting and drawing funds: 97.030, Community Disaster Loans; 97.031, Cora Brown Fund; 97.032, Crisis Counseling; 97.033, Disaster Legal Services; 97.034, Disaster Unemployment Assistance (DUA); 97.046, Fire Management Assistance Grant; 97.048, Disaster Housing Assistance to Individuals and Households in Presidentially Declared Disaster Areas; 97.049, Presidentially Declared Disaster Assistance—Disaster Housing Operations for Individuals and Households; 97.050, Presidentially Declared Disaster Assistance to Individuals and Households—Other Needs; 97.036, Disaster Grants—Public Assistance (Presidentially Declared Disasters); 97.039, Hazard Mitigation Grant.

W. Craig Fugate,

Administrator, Federal Emergency Management Agency.

[FR Doc. 2012–29677 Filed 12–7–12; 8:45 am]

BILLING CODE 9111–23–P

DEPARTMENT OF HOMELAND SECURITY

Federal Emergency Management Agency

[Internal Agency Docket No. FEMA–3350–EM: Docket ID FEMA–2012–0002]

Massachusetts; Amendment No. 2 to Notice of an Emergency Declaration

AGENCY: Federal Emergency Management Agency, DHS.

ACTION: Notice.

SUMMARY: This notice amends the notice of an emergency declaration for the Commonwealth of Massachusetts (FEMA–3350–EM), dated October 28, 2012, and related determinations.

DATES: *Effective Date:* November 8, 2012.

FOR FURTHER INFORMATION CONTACT: Peggy Miller, Office of Response and Recovery, Federal Emergency Management Agency, 500 C Street SW., Washington, DC 20472, (202) 646–3886.

SUPPLEMENTARY INFORMATION: Notice is hereby given that the incident period for this emergency is closed effective November 8, 2012.

The following Catalog of Federal Domestic Assistance Numbers (CFDA) are to be used for reporting and drawing funds: 97.030, Community Disaster Loans; 97.031, Cora Brown Fund; 97.032, Crisis Counseling; 97.033, Disaster Legal Services; 97.034, Disaster Unemployment Assistance (DUA); 97.046, Fire Management Assistance Grant; 97.048, Disaster Housing Assistance to Individuals and Households in Presidentially Declared Disaster Areas; 97.049, Presidentially Declared Disaster Assistance—Disaster Housing Operations for Individuals and Households; 97.050, Presidentially Declared Disaster Assistance to Individuals and Households—Other Needs; 97.036, Disaster Grants—Public Assistance (Presidentially Declared Disasters); 97.039, Hazard Mitigation Grant.

W. Craig Fugate,

Administrator, Federal Emergency Management Agency.

[FR Doc. 2012–29674 Filed 12–7–12; 8:45 am]

BILLING CODE 9111–23–P

DEPARTMENT OF HOMELAND SECURITY

Federal Emergency Management Agency

[Internal Agency Docket No. FEMA–4087–DR; Docket ID FEMA–2011–0001]

Connecticut; Amendment No. 2 to Notice of a Major Disaster Declaration

AGENCY: Federal Emergency Management Agency, DHS.

ACTION: Notice.

SUMMARY: This notice amends the notice of a major disaster for the State of Connecticut (FEMA–4087–DR), dated October 30, 2012, and related determinations.

DATES: *Effective Date:* November 9, 2012.

FOR FURTHER INFORMATION CONTACT: Peggy Miller, Office of Response and Recovery, Federal Emergency Management Agency, 500 C Street SW., Washington, DC 20472, (202) 646–3886.

SUPPLEMENTARY INFORMATION: Notice is hereby given that, on November 9, 2012, the President amended the cost-sharing arrangements regarding Federal funds provided under the authority of the Robert T. Stafford Disaster Relief and Emergency Assistance Act, 42 U.S.C. 5121 *et seq.* (the ''Stafford Act''), as follows:

I authorize continuation until 11:59 p.m. on Wednesday, November 14, 2012, of the 100% Federal cost share for emergency power restoration assistance and emergency public transportation assistance (including emergency protective measures to secure public transportation infrastructure), including direct Federal assistance, for those areas within counties designated for Public Assistance.

This adjustment to State and local cost sharing applies only to Public Assistance costs for emergency power restoration assistance and emergency public transportation assistance, including direct Federal assistance. All other Public Assistance costs will continue to be reimbursed at 75 percent of total eligible costs. The law specifically prohibits a similar adjustment for funds provided to States for Other Needs Assistance (Section 408) and the Hazard Mitigation Grant Program (Section 404). These funds will continue to be reimbursed at 75 percent of total eligible costs.

The following Catalog of Federal Domestic Assistance Numbers (CFDA) are to be used for reporting and drawing funds: 97.030, Community Disaster Loans; 97.031, Cora Brown Fund; 97.032, Crisis Counseling; 97.033, Disaster Legal Services; 97.034, Disaster Unemployment Assistance (DUA); 97.046, Fire Management Assistance Grant; 97.048, Disaster Housing Assistance to Individuals and Households in Presidentially Declared Disaster Areas; 97.049, Presidentially Declared Disaster Assistance—Disaster Housing Operations for Individuals and Households; 97.050, Presidentially Declared Disaster Assistance to Individuals and Households—Other Needs; 97.036, Disaster Grants—Public Assistance (Presidentially Declared Disasters); 97.039, Hazard Mitigation Grant.

W. Craig Fugate,

Administrator, Federal Emergency Management Agency.

[FR Doc. 2012–29656 Filed 12–7–12; 8:45 am]

BILLING CODE 9111–23–P

DEPARTMENT OF HOMELAND SECURITY

Federal Emergency Management Agency

[Internal Agency Docket No. FEMA–4089–DR; Docket ID FEMA–2011–0001]

Rhode Island; Amendment No. 2 to Notice of a Major Disaster Declaration

AGENCY: Federal Emergency Management Agency, DHS.

ACTION: Notice.

SUMMARY: This notice amends the notice of a major disaster declaration for the State of Rhode Island (FEMA–4089–DR), dated November 3, 2012, and related determinations.

DATES: *Effective Date:* November 14, 2012.

FOR FURTHER INFORMATION CONTACT: Peggy Miller, Office of Response and Recovery, Federal Emergency Management Agency, 500 C Street SW., Washington, DC 20472, (202) 646–3886.

SUPPLEMENTARY INFORMATION: The notice of a major disaster declaration for the State of Rhode Island is hereby amended to include the Individual Assistance program for the following areas among those areas determined to have been adversely affected by the event declared a major disaster by the President in his declaration of November 3, 2012.

Newport and Washington Counties for Individual Assistance (already designated for Public Assistance, including direct federal assistance).

The following Catalog of Federal Domestic Assistance Numbers (CFDA) are to be used for reporting and drawing funds: 97.030, Community Disaster Loans; 97.031, Cora Brown Fund; 97.032, Crisis Counseling; 97.033, Disaster Legal Services; 97.034, Disaster Unemployment Assistance (DUA); 97.046, Fire Management Assistance Grant; 97.048, Disaster Housing Assistance to Individuals and Households in Presidentially Declared Disaster Areas; 97.049, Presidentially Declared Disaster Assistance—Disaster Housing Operations for Individuals and Households; 97.050, Presidentially Declared Disaster Assistance to Individuals and Households—Other Needs; 97.036, Disaster Grants—Public Assistance (Presidentially Declared Disasters); 97.039, Hazard Mitigation Grant.

W. Craig Fugate,

Administrator, Federal Emergency Management Agency.

[FR Doc. 2012–29679 Filed 12–7–12; 8:45 am]

BILLING CODE 9111–23–P

DEPARTMENT OF HOMELAND SECURITY

Federal Emergency Management Agency

[Internal Agency Docket No. FEMA–4069–DR; Docket ID FEMA–2012–0002]

Minnesota; Amendment No. 3 to Notice of a Major Disaster Declaration

AGENCY: Federal Emergency Management Agency, DHS.

ACTION: Notice.

SUMMARY: This notice amends the notice of a major disaster declaration for State of Minnesota (FEMA–4069–DR), dated July 6, 2012, and related determinations.

DATES: *Effective Date:* November 26, 2012.

FOR FURTHER INFORMATION CONTACT: Peggy Miller, Office of Response and Recovery, Federal Emergency Management Agency, 500 C Street SW., Washington, DC 20472, (202) 646–3886.

SUPPLEMENTARY INFORMATION: The Federal Emergency Management Agency (FEMA) hereby gives notice that pursuant to the authority vested in the Administrator, under Executive Order 12148, as amended, W. Michael Moore, of FEMA is appointed to act as the Federal Coordinating Officer for this disaster.

This action terminates the appointment of Kari Suzann Cowie as Federal Coordinating Officer for this disaster.

The following Catalog of Federal Domestic Assistance Numbers (CFDA) are to be used for reporting and drawing funds: 97.030, Community Disaster Loans; 97.031, Cora Brown Fund; 97.032, Crisis Counseling; 97.033, Disaster Legal Services; 97.034, Disaster Unemployment Assistance (DUA); 97.046, Fire Management Assistance Grant; 97.048, Disaster Housing Assistance to Individuals and Households in Presidentially Declared Disaster Areas; 97.049, Presidentially Declared Disaster Assistance—Disaster Housing Operations for Individuals and Households; 97.050, Presidentially Declared Disaster Assistance to Individuals and Households—Other Needs; 97.036, Disaster Grants—Public Assistance (Presidentially Declared Disasters); 97.039, Hazard Mitigation Grant.

W. Craig Fugate,

Administrator, Federal Emergency Management Agency.

[FR Doc. 2012–29670 Filed 12–7–12; 8:45 am]

BILLING CODE 9111–23–P

DEPARTMENT OF HOMELAND SECURITY

Federal Emergency Management Agency

[Internal Agency Docket No. FEMA–4086–DR; Docket ID FEMA–2011–0001]

New Jersey; Amendment No. 5 to Notice of a Major Disaster Declaration

AGENCY: Federal Emergency Management Agency, DHS.

ACTION: Notice.

SUMMARY: This notice amends the notice of a major disaster for the State of New Jersey (FEMA–4086–DR), dated October 30, 2012, and related determinations.

DATES: *Effective Date:* November 9, 2012.

FOR FURTHER INFORMATION CONTACT: Peggy Miller, Office of Response and Recovery, Federal Emergency Management Agency, 500 C Street SW., Washington, DC 20472, (202) 646–3886.

SUPPLEMENTARY INFORMATION: Notice is hereby given that, on November 9, 2012, the President amended the cost-sharing arrangements regarding Federal funds provided under the authority of the Robert T. Stafford Disaster Relief and Emergency Assistance Act, 42 U.S.C. 5121 *et seq.* (the ''Stafford Act''), as follows:

I authorize continuation until 11:59 p.m. on Wednesday, November 14, 2012, of the 100% Federal cost share for emergency power restoration assistance and emergency public transportation assistance (including emergency protective measures to secure public transportation infrastructure), including direct Federal assistance, for those areas within counties designated for Public Assistance.

This adjustment to State and local cost sharing applies only to Public Assistance costs for emergency power restoration assistance and emergency public transportation assistance, including direct Federal assistance. All other Public Assistance costs will continue to be reimbursed at 75 percent of total eligible costs. The law specifically prohibits a similar adjustment for funds provided to States for Other Needs Assistance (Section 408) and the Hazard Mitigation Grant Program (Section 404). These funds will continue to be reimbursed at 75 percent of total eligible costs.

The following Catalog of Federal Domestic Assistance Numbers (CFDA) are to be used for reporting and drawing funds: 97.030, Community Disaster Loans; 97.031, Cora Brown Fund; 97.032, Crisis Counseling; 97.033, Disaster Legal Services; 97.034, Disaster Unemployment Assistance (DUA); 97.046, Fire Management Assistance Grant; 97.048, Disaster Housing Assistance to Individuals and Households in Presidentially Declared Disaster Areas; 97.049, Presidentially Declared Disaster Assistance—Disaster Housing Operations for Individuals and Households; 97.050, Presidentially Declared Disaster Assistance to Individuals and Households—Other Needs; 97.036, Disaster Grants—Public Assistance (Presidentially Declared Disasters); 97.039, Hazard Mitigation Grant.

W. Craig Fugate,

Administrator, Federal Emergency Management Agency.

[FR Doc. 2012–29654 Filed 12–7–12; 8:45 am]

BILLING CODE 9111–23–P

DEPARTMENT OF HOMELAND SECURITY

Federal Emergency Management Agency

[Internal Agency Docket No. FEMA–1971–DR; Docket ID FEMA–2011–0001]

Alabama; Amendment No. 19 to Notice of a Major Disaster Declaration

AGENCY: Federal Emergency Management Agency, DHS.

ACTION: Notice.

SUMMARY: This notice amends the notice of a major disaster for the State of Alabama (FEMA–1971–DR), dated April 28, 2011, and related determinations.

DATES: *Effective Date:* November 28, 2012.

FOR FURTHER INFORMATION CONTACT: Peggy Miller, Office of Response and Recovery, Federal Emergency Management Agency, 500 C Street SW., Washington, DC 20472, (202) 646–3886.

SUPPLEMENTARY INFORMATION: Notice is hereby given that, in a letter dated November 28, 2012, the President amended the cost-sharing arrangements regarding Federal funds provided under the authority of the Robert T. Stafford Disaster Relief and Emergency Assistance Act, 42 U.S.C. 5121 *et seq.* (the ''Stafford Act''), in a letter to W. Craig Fugate, Administrator, Federal Emergency Management Agency, Department of Homeland Security, under Executive Order 12148, as follows:

I have determined that the damage in certain areas of the State of Alabama resulting from severe storms, tornadoes, straight-line winds, and flooding during the period of April 15 to May 31, 2011, is of sufficient severity and magnitude that special cost sharing arrangements are warranted regarding Federal funds provided under the Robert T. Stafford Disaster Relief and Emergency Assistance Act, 42 U.S.C. 5121 *et seq.* (the ''Stafford Act'').

Therefore, I amend my declaration of April 28, 2011, to authorize Federal funds for all categories of Public Assistance at 90 percent of total eligible costs.

This adjustment to State and local cost sharing applies only to Public Assistance costs and direct Federal assistance eligible for such adjustments under the law. The Robert T. Stafford Disaster Relief and Emergency Assistance Act specifically prohibits a similar adjustment for funds provided for Other Needs Assistance (Section 408) and the Hazard Mitigation Grant Program (Section 404). These funds will continue to be reimbursed at 75 percent of total eligible costs.

(The following Catalog of Federal Domestic Assistance Numbers (CFDA) are to be used for reporting and drawing funds: 97.030, Community Disaster Loans; 97.031, Cora Brown Fund; 97.032, Crisis Counseling; 97.033, Disaster Legal Services; 97.034, Disaster Unemployment Assistance (DUA); 97.046, Fire Management Assistance Grant; 97.048, Disaster Housing Assistance to Individuals and Households in Presidentially Declared Disaster Areas; 97.049, Presidentially Declared Disaster Assistance—Disaster Housing Operations for Individuals and Households; 97.050, Presidentially Declared Disaster Assistance to Individuals and Households—Other Needs; 97.036, Disaster Grants—Public Assistance (Presidentially Declared Disasters); 97.039, Hazard Mitigation Grant.)

W. Craig Fugate,

Administrator, Federal Emergency Management Agency.

[FR Doc. 2012–29667 Filed 12–7–12; 8:45 am]

BILLING CODE 9111–23–P

DEPARTMENT OF HOMELAND SECURITY

Federal Emergency Management Agency

[Internal Agency Docket No. FEMA–4085–DR; Docket ID FEMA–2011–0001]

New York; Amendment No. 4 to Notice of a Major Disaster Declaration

AGENCY: Federal Emergency Management Agency, DHS.

ACTION: Notice.

SUMMARY: This notice amends the notice of a major disaster for the State of New York (FEMA–4085–DR), dated October 30, 2012, and related determinations.

DATES: *Effective Date:* November 9, 2012.

FOR FURTHER INFORMATION CONTACT: Peggy Miller, Office of Response and Recovery, Federal Emergency Management Agency, 500 C Street SW., Washington, DC 20472, (202) 646–3886.

SUPPLEMENTARY INFORMATION: Notice is hereby given that, on November 9, 2012, the President amended the cost-sharing arrangements regarding Federal funds provided under the authority of the Robert T. Stafford Disaster Relief and Emergency Assistance Act, 42 U.S.C. 5121 *et seq.* (the ''Stafford Act''), as follows:

I authorize continuation until 11:59 p.m. on Wednesday, November 14, 2012, of the 100% Federal cost share for emergency power restoration assistance and emergency public transportation assistance (including emergency protective measures to secure public transportation infrastructure), including direct Federal assistance, for those areas within counties designated for Public Assistance.

This adjustment to State and local cost sharing applies only to Public Assistance costs for emergency power restoration assistance and emergency public transportation assistance, including direct Federal assistance. All other Public Assistance costs will continue to be reimbursed at 75 percent of total eligible costs. The law specifically prohibits a similar adjustment for funds provided to States for Other Needs Assistance (Section 408) and the Hazard Mitigation Grant Program (Section 404). These funds will continue to be reimbursed at 75 percent of total eligible costs.

(The following Catalog of Federal Domestic Assistance Numbers (CFDA) are to be used for reporting and drawing funds: 97.030, Community Disaster Loans; 97.031, Cora Brown Fund; 97.032, Crisis Counseling; 97.033, Disaster Legal Services; 97.034, Disaster Unemployment Assistance (DUA); 97.046, Fire Management Assistance Grant; 97.048, Disaster Housing Assistance to Individuals and Households in Presidentially Declared Disaster Areas; 97.049, Presidentially Declared Disaster Assistance—Disaster Housing Operations for Individuals and Households; 97.050, Presidentially Declared Disaster Assistance to Individuals and Households—Other Needs; 97.036, Disaster Grants—Public Assistance (Presidentially Declared Disasters); 97.039, Hazard Mitigation Grant.)

W. Craig Fugate,

Administrator, Federal Emergency Management Agency.

[FR Doc. 2012–29652 Filed 12–7–12; 8:45 am]

BILLING CODE 9111–23–P

DEPARTMENT OF HOMELAND SECURITY

Federal Emergency Management Agency

[Internal Agency Docket No. FEMA–4089–DR; Docket ID FEMA–2012–0002]

Rhode Island; Amendment No. 1 to Notice of a Major Disaster Declaration

AGENCY: Federal Emergency Management Agency, DHS.

ACTION: Notice.

SUMMARY: This notice amends the notice of a major disaster declaration for the State of Rhode Island (FEMA–4089–DR), dated November 3, 2012, and related determinations.

DATES: *Effective Date:* November 10, 2012.

FOR FURTHER INFORMATION CONTACT: Peggy Miller, Office of Response and Recovery, Federal Emergency Management Agency, 500 C Street SW., Washington, DC 20472, (202) 646–3886.

SUPPLEMENTARY INFORMATION: The notice of a major disaster declaration for the State of Rhode Island is hereby amended to include the following area among those areas determined to have been adversely affected by the event declared a major disaster by the President in his declaration of November 3, 2012.

Kent County for Public Assistance, including direct federal assistance.

The following Catalog of Federal Domestic Assistance Numbers (CFDA) are to be used for reporting and drawing funds: 97.030, Community Disaster Loans; 97.031, Cora Brown Fund; 97.032, Crisis Counseling; 97.033, Disaster Legal Services; 97.034, Disaster Unemployment Assistance (DUA); 97.046, Fire Management Assistance Grant; 97.048, Disaster Housing Assistance to Individuals and Households in Presidentially Declared Disaster Areas; 97.049, Presidentially Declared Disaster Assistance—Disaster Housing Operations for Individuals and Households; 97.050, Presidentially Declared Disaster Assistance to Individuals and Households—Other Needs; 97.036, Disaster Grants—Public Assistance (Presidentially Declared Disasters); 97.039, Hazard Mitigation Grant.)

W. Craig Fugate,

Administrator, Federal Emergency Management Agency.

[FR Doc. 2012–29657 Filed 12–7–12; 8:45 am]

BILLING CODE 9111–23–P

DEPARTMENT OF HOMELAND SECURITY

Federal Emergency Management Agency

[Internal Agency Docket No. FEMA–4085–DR; Docket ID FEMA–2012–0002]

New York; Amendment No. 5 to Notice of a Major Disaster Declaration

AGENCY: Federal Emergency Management Agency, DHS.

ACTION: Notice.

SUMMARY: This notice amends the notice of a major disaster declaration for the State of New York (FEMA–4085–DR), dated October 30, 2012, and related determinations.

DATES: *Effective Date:* November 10, 2012.

FOR FURTHER INFORMATION CONTACT: Peggy Miller, Office of Response and Recovery, Federal Emergency

Management Agency, 500 C Street SW., Washington, DC 20472, (202) 646–3886.

SUPPLEMENTARY INFORMATION: The notice of a major disaster declaration for the State of New York is hereby amended to include the following areas among those areas determined to have been adversely affected by the event declared a major disaster by the President in his declaration of October 30, 2012.

Orange, Putnam, Sullivan, and Ulster Counties for Individual Assistance.

(The following Catalog of Federal Domestic Assistance Numbers (CFDA) are to be used for reporting and drawing funds: 97.030, Community Disaster Loans; 97.031, Cora Brown Fund; 97.032, Crisis Counseling; 97.033, Disaster Legal Services; 97.034, Disaster Unemployment Assistance (DUA); 97.046, Fire Management Assistance Grant; 97.048, Disaster Housing Assistance to Individuals and Households in Presidentially Declared Disaster Areas; 97.049, Presidentially Declared Disaster Assistance—Disaster Housing Operations for Individuals and Households; 97.050, Presidentially Declared Disaster Assistance to Individuals and Households—Other Needs; 97.036, Disaster Grants—Public Assistance (Presidentially Declared Disasters); 97.039, Hazard Mitigation Grant.)

W. Craig Fugate,

Administrator, Federal Emergency Management Agency.

[FR Doc. 2012–29662 Filed 12–7–12; 8:45 am]

BILLING CODE 9111–23–P

DEPARTMENT OF HOMELAND SECURITY

Federal Emergency Management Agency

[Internal Agency Docket No. FEMA–4090–DR; Docket ID FEMA–2012–0002]

Delaware; Major Disaster and Related Determinations

AGENCY: Federal Emergency Management Agency, DHS.

ACTION: Notice.

SUMMARY: This is a notice of the Presidential declaration of a major disaster for the State of Delaware (FEMA–4090–DR), dated November 16, 2012, and related determinations.

DATES: *Effective Date:* November 16, 2012.

FOR FURTHER INFORMATION CONTACT: Peggy Miller, Office of Response and Recovery, Federal Emergency Management Agency, 500 C Street SW., Washington, DC 20472, (202) 646–3886.

SUPPLEMENTARY INFORMATION: Notice is hereby given that, in a letter dated November 16, 2012, the President issued a major disaster declaration under the authority of the Robert T. Stafford Disaster Relief and Emergency Assistance Act, 42 U.S.C. 5121 *et seq.* (the ''Stafford Act''), as follows:

I have determined that the damage in certain areas of the State of Delaware resulting from Hurricane Sandy during the period of October 27 to November 8, 2012, is of sufficient severity and magnitude to warrant a major disaster declaration under the Robert T. Stafford Disaster Relief and Emergency Assistance Act, 42 U.S.C. 5121 *et seq.* (the ''Stafford Act''). Therefore, I declare that such a major disaster exists in the State of Delaware.

In order to provide Federal assistance, you are hereby authorized to allocate from funds available for these purposes such amounts as you find necessary for Federal disaster assistance and administrative expenses.

You are authorized to provide Public Assistance in the designated areas and Hazard Mitigation throughout the State. Consistent with the requirement that Federal assistance is supplemental, any Federal funds provided under the Stafford Act for Public Assistance and Hazard Mitigation will be limited to 75 percent of the total eligible costs.

Further, you are authorized to make changes to this declaration for the approved assistance to the extent allowable under the Stafford Act.

The Federal Emergency Management Agency (FEMA) hereby gives notice that pursuant to the authority vested in the Administrator, under Executive Order 12148, as amended, Jack Schuback, of FEMA is appointed to act as the Federal Coordinating Officer for this major disaster.

The following areas of the State of Delaware have been designated as adversely affected by this major disaster:

Kent, New Castle, and Sussex Counties for Public Assistance.

All counties within the State of Delaware are eligible to apply for assistance under the Hazard Mitigation Grant Program.

The following Catalog of Federal Domestic Assistance Numbers (CFDA) are to be used for reporting and drawing funds: 97.030, Community Disaster Loans; 97.031, Cora Brown Fund; 97.032, Crisis Counseling; 97.033, Disaster Legal Services; 97.034, Disaster Unemployment Assistance (DUA); 97.046, Fire Management Assistance Grant; 97.048, Disaster Housing Assistance to Individuals and Households in Presidentially Declared Disaster Areas; 97.049, Presidentially Declared Disaster Assistance—Disaster Housing Operations for Individuals and Households; 97.050, Presidentially Declared Disaster Assistance to Individuals and Households—Other Needs; 97.036, Disaster Grants—Public Assistance (Presidentially Declared Disasters); 97.039, Hazard Mitigation Grant.

W. Craig Fugate,

Administrator, Federal Emergency Management Agency.

[FR Doc. 2012–29672 Filed 12–7–12; 8:45 am]

BILLING CODE 9111–23–P

DEPARTMENT OF HOMELAND SECURITY

Federal Emergency Management Agency

[Docket ID FEMA–2012–0003; Internal Agency Docket No. FEMA–B–1275]

Proposed Flood Hazard Determinations

AGENCY: Federal Emergency Management Agency, DHS.

ACTION: Notice.

SUMMARY: Comments are requested on proposed flood hazard determinations, which may include additions or modifications of any Base Flood Elevation (BFE), base flood depth, Special Flood Hazard Area (SFHA) boundary or zone designation, or regulatory floodway on the Flood Insurance Rate Maps (FIRMs), and where applicable, in the supporting Flood Insurance Study (FIS) reports for the communities listed in the table below. The purpose of this notice is to seek general information and comment regarding the preliminary FIRM, and where applicable, the FIS report that the Federal Emergency Management Agency (FEMA) has provided to the affected communities. The FIRM and FIS report are the basis of the floodplain management measures that the community is required either to adopt or to show evidence of having in effect in order to qualify or remain qualified for participation in the National Flood Insurance Program (NFIP). In addition, the FIRM and FIS report, once effective, will be used by insurance agents and others to calculate appropriate flood insurance premium rates for new buildings and the contents of those buildings.

DATES: Comments are to be submitted on or before March 11, 2013.

ADDRESSES: The Preliminary FIRM, and where applicable, the FIS report for each community are available for inspection at both the online location and the respective Community Map Repository address listed in the tables below. Additionally, the current effective FIRM and FIS report for each community are accessible online

through the FEMA Map Service Center at *www.msc.fema.gov* for comparison.

You may submit comments, identified by Docket No. FEMA–B–1275, to Luis Rodriguez, Chief, Engineering Management Branch, Federal Insurance and Mitigation Administration, FEMA, 500 C Street SW., Washington, DC 20472, (202) 646–4064, or (email) *Luis.Rodriguez3@fema.dhs.gov.*

FOR FURTHER INFORMATION CONTACT: Luis Rodriguez, Chief, Engineering Management Branch, Federal Insurance and Mitigation Administration, FEMA, 500 C Street SW., Washington, DC 20472, (202) 646–4064, or (email) *Luis.Rodriguez3@fema.dhs.gov;* or visit the FEMA Map Information eXchange (FMIX) online at *www.floodmaps.fema.gov/fhm/fmx_main.html.*

SUPPLEMENTARY INFORMATION: FEMA proposes to make flood hazard determinations for each community listed below, in accordance with section 110 of the Flood Disaster Protection Act of 1973, 42 U.S.C. 4104, and 44 CFR 67.4(a).

These proposed flood hazard determinations, together with the floodplain management criteria required by 44 CFR 60.3, are the minimum that are required. They should not be construed to mean that the community must change any existing ordinances that are more stringent in their floodplain management requirements. The community may at any time enact stricter requirements of its own or pursuant to policies established by other Federal, State, or regional entities. These flood hazard determinations are used to meet the floodplain management requirements of the NFIP and also are used to calculate the appropriate flood insurance premium rates for new buildings built after the FIRM and FIS report become effective.

The communities affected by the flood hazard determinations are provided in the tables below. Any request for reconsideration of the revised flood hazard information shown on the Preliminary FIRM and FIS report that satisfies the data requirements outlined in 44 CFR 67.6(b) is considered an appeal. Comments unrelated to the flood hazard determinations also will be considered before the FIRM and FIS report become effective.

Use of a Scientific Resolution Panel (SRP) is available to communities in support of the appeal resolution process. SRPs are independent panels of experts in hydrology, hydraulics, and other pertinent sciences established to review conflicting scientific and technical data and provide recommendations for resolution. Use of the SRP only may be exercised after FEMA and local communities have been engaged in a collaborative consultation process for at least 60 days without a mutually acceptable resolution of an appeal. Additional information regarding the SRP process can be found online at *http://floodsrp.org/pdfs/srp_fact_sheet.pdf.*

The watersheds and/or communities affected are listed in the tables below. The Preliminary FIRM, and where applicable, FIS report for each community are available for inspection at both the online location and the respective Community Map Repository address listed in the tables. Additionally, the current effective FIRM and FIS report for each community are accessible online through the FEMA Map Service Center at *www.msc.fema.gov* for comparison.

Community	Community Map Repository Address
Nantucket County, Massachusetts (All Jurisdictions)	
Maps Available for Inspection Online at: *http://www.starr-team.com/starr/RegionalWorkspaces/RegionI/NantucketCountyMAcoastal/SitePages/Home.aspx*	
Town of Nantucket	Town Hall, 16 Broad Street, Nantucket, MA 02554.
City of Carson City, Nevada (Independent City)	
Maps Available for Inspection Online at: *http://www.r9map.org/Pages/countyPage.aspx?choLoco=90&choProj=*	
City of Carson City	Permit Center, 108 East Proctor Street, Carson City, NV 89701.
Russell County, Alabama, and Incorporated Areas	
Maps Available for Inspection Online at: *http://www.adeca.alabama.gov/Divisions/owr/floodplain/Pages/County-Status.aspx*	
City of Phenix City	City Hall, 601 12th Street, Phenix City, AL 36867.
Unincorporated Areas of Russell County	Russell County Courthouse, 501 14th Street, Phenix City, AL 36867.
Santa Clara County, California, and Incorporated Areas	
Maps Available for Inspection Online at: *http://www.r9map.org/Pages/countyPage.aspx?choLoco=43&choProj=271*	
City of Campbell	Planning Department, 70 North First Street, Campbell, CA 95008.
City of Milpitas	Engineering Division, 455 East Calaveras Boulevard, Milpitas, CA 95035.
City of San Jose	Department of Public Works, 200 East Santa Clara Street Tower, 3rd Floor, San Jose, CA 95113.
City of Santa Clara	Planning and Inspection Department, 1500 Warburton Avenue, Santa Clara, CA 95050.
City of Saratoga	Planning Department, 13777 Fruitvale Avenue, Saratoga, CA 95070.
Town of Los Gatos	Engineering Services, 110 East Main Street, Los Gatos, CA 95030.
Unincorporated Areas of Santa Clara County	Santa Clara Office of Planning, 70 West Hedding Street, San Jose, CA 95110.

Community	Community Map Repository Address
Manatee County, Florida, and Incorporated Areas	
Maps Available for Inspection Online at: *http://www.bakeraecom.com/index.php/florida/manatee*	
City of Bradenton Beach	City Hall, 107 Gulf Drive North, Bradenton Beach, FL 34217.
City of Holmes Beach	City Hall, 5801 Marina Drive, Holmes Beach, FL 34217.
Town of Longboat Key	Town Hall, 501 Bay Isles Road, Longboat Key, FL 34228.
Ohio County, Indiana, and Incorporated Areas	
Maps Available for Inspection Online at: *http://www.in.gov/dnr/water/6573.htm*	
City of Rising Sun	City Hall, 200 North Walnut Street, Rising Sun, IN 47040.
Unincorporated Areas of Ohio County	Ohio County Courthouse, 413 Main Street, Rising Sun, IN 47040.
Owen County, Indiana, and Incorporated Areas	
Maps Available for Inspection Online at: *http://www.in.gov/dnr/water/7357.htm*	
Town of Gosport	Town Hall, 13 South 3rd Street, Gosport, IN 47433.
Town of Spencer	Building Department, Municipal Building, 90 North West Street, Spencer, IN 47460.
Unincorporated Areas of Owen County	Owen County Building Department, Owen County Courthouse, 60 South Main Street, Spencer, IN 47460.
Rush County, Indiana, and Incorporated Areas	
Maps Available for Inspection Online at: *http://www.in.gov/dnr/water/6672.htm*	
City of Rushville	Rush County Courthouse, Area Plan Commission, Room 211, 101 East 2nd Street, Rushville, IN 46173.
Town of Carthage	Rush County Courthouse, Area Plan Commission, Room 211, 101 East 2nd Street, Rushville, IN 46173.
Unincorporated Areas of Rush County	Rush County Courthouse, Area Plan Commission, Room 211, 101 East 2nd Street, Rushville, IN 46173.
Plymouth County, Massachusetts (All Jurisdictions)	
Maps Available for Inspection Online at: *http://www.starr-team.com/starr/RegionalWorkspaces/RegionI/PlymouthCountyMAMapMod*	
Town of Marion	Town House, 2 Spring Street, Marion, MA 02738.
Town of Mattapoisett	Town Hall, 16 Main Street, Mattapoisett, MA 02739.
Town of Wareham	Memorial Town Hall, 54 Marion Road, Wareham, MA 02571.
Cass County, North Dakota, and Incorporated Areas	
Maps Available for Inspection Online at: *http://www.bakeraecom.com/index.php/north-dakota/cass/*	
City of Argusville	City Hall, 201 North Highway 81, Argusville, ND 58005.
City of Briarwood	City Hall, 8 Briarwood Place, Briarwood, ND 58104.
City of Fargo	City Hall, 200 3rd Street North, Fargo, ND 58102.
City of Frontier	Frontier City Hall, 5202 32nd Street South, Fargo, ND 58104.
City of Harwood	City Hall, 114 Lind Boulevard, Harwood, ND 58042.
City of Horace	City Hall, 600 Nelson Drive, Horace, ND 58047.
City of North River	City Hall, 1409 Reed Drive, North River, ND 58102.
City of Oxbow	City Hall, 610 Evergreen Circle, Oxbow, ND 58047.
City of Prairie Rose	Prairie Rose City Hall, 3514 41st Avenue South, Fargo, ND 58104.
City of Reiles Acres	City Hall, 4635 35th Avenue North, Reiles Acres, ND 58102.
City of West Fargo	City Hall, 800 4th Avenue East, West Fargo, ND 58078.
Township of Barnes	Barnes Township Hall, 2715 Sheyenne Street, West Fargo, ND 58078.
Township of Harwood	Township Hall, 2935 170th Avenue Southeast, Harwood, ND 58042.
Township of Mapleton	Township Hall, 16522 41st Street Southeast, Mapleton, ND 58059.
Township of Pleasant	Pleasant Township Hall, 5060 173rd Avenue Southeast, Horace, ND 58047.
Township of Raymond	Raymond Township Hall, 16354 30th Street Southeast, Harwood, ND 58042.
Township of Reed	Reed Township Hall, 617 19th Avenue Northwest, West Fargo, ND 58078.
Township of Stanley	Stanley Township Hall, 7105 12th Street South, Fargo, ND 58104.
Township of Warren	Warren Township Hall, 4308 165th Avenue Southeast, Davenport, ND 58021.

(Catalog of Federal Domestic Assistance No. 97.022, ''Flood Insurance.'')

Dated: November 9, 2012.

James A. Walke,

Acting Deputy Associate Administrator for Mitigation, Department of Homeland Security, Federal Emergency Management Agency.

[FR Doc. 2012–29697 Filed 12–7–12; 8:45 am]

BILLING CODE 9110–12–P

DEPARTMENT OF HOUSING AND URBAN DEVELOPMENT

[Docket No. FR–5609–N–13]

Notice of Proposed Information Collection: Comment Request Family Self-Sufficiency Program Demonstration

AGENCY: Office of Policy Development and Research, HUD.

ACTION: Notice.

SUMMARY: The proposed information collection requirement described below will be submitted to the Office of Management and Budget (OMB) for review, as required by the Paperwork Reduction Act. The Department is soliciting public comments on the subject proposal.

DATES: *Comments Due Date:* February 8, 2013.

ADDRESSES: Interested persons are invited to submit comments regarding this proposal. Comments should refer to the proposal by name and should be sent to: Reports Liaison Officer, Office of Policy Development and Research, Department of Housing and Urban Development, 451 Seventh Street SW., Room 8230, Washington, DC 20410.

FOR FURTHER INFORMATION CONTACT: Jennifer Stoloff, Department of Housing and Urban Development, Office of Policy Development and Research, 451 7th Street SW., Room 8120, Washington, DC 20410; telephone (202) 402–5723, (this is not a toll free number). Copies of the proposed data collection instruments and other available documents may be obtained from Dr. Stoloff.

SUPPLEMENTARY INFORMATION: The Department will submit the proposed information collection to OMB for review, as required by the Paperwork Reduction Act of 1995 (44 U.S.C. Chapter 35, as amended). This notice is soliciting comments from members of the public and affected agencies concerning the proposed collection of information to: (1) Evaluate whether the proposed collection of information is necessary for the proper performance of the functions of the agency, including if the information will have practical utility; (2) Evaluate the accuracy of the agency's estimate of the burden of proposed collection of information; (3) Enhance the quality, utility, and clarity of the information to be collected; and (4) Minimize the burden of the collection of information on those who are to respond, including through the use of appropriate automated collection techniques or other forms of information technology, e.g., permitting electronic submission of responses.

This notice also lists the following information:

Title of Proposal: Family Self-Sufficiency (FSS) Program Demonstration

Description of the need for information and proposed use: The Department is conducting this study under contract with MDRC and its subcontractors (Branch Associates and M. Davis and Company, Inc.). The project is an evaluation of the Family Self-Sufficiency Program operated at Public Housing Agencies (PHAs) across the U.S. The study will use random-assignment methods to evaluate the effectiveness of the program. FSS has operated since 1992 and serves voucher holders and residents of public housing. The FSS model is essentially case management plus an escrow account. FSS case managers create a plan with families to achieve goals and connect with services that will enhance their employment opportunities. Families accrue money in their escrow accounts as they increase their earnings. To date, HUD has funded two other studies of the FSS program, but neither can tell us how well families would have done in the absence of the program. A random assignment model is needed because participant self-selection into FSS limits the ability to know whether program features rather than the characteristics of the participating families caused tenant income gains. Random assignment will limit the extent to which selection bias is driving observed results. The demonstration will document the progress of a group of FSS participants from initial enrollment to program completion (or exit). The intent is to gain a deeper understanding of the program and illustrate strategies that assist participants to obtain greater economic independence. While the main objective of FSS is stable, suitable employment, there are many interim outcomes of interest, which include: Getting a first job; getting a higher paying job; self-employment/small business ownership; no longer needing benefits provided under one or more welfare programs; obtaining additional education, whether in the form of a high school diploma, higher education degree, or vocational training; buying a home; buying a car; setting up savings accounts; or accomplishing similar goals that lead to economic independence.

Data collection will include the families that are part of the treatment and control groups, as well as PHA staff. Data will be gathered through a variety of methods including surveys, informational interviews, direct observation, and analysis of administrative records.

Members of the affected public:

PHA Staff	Approximately 72 (i.e., assuming up to 4 staff at up to 18 PHAs).
Families receiving subsidized housing and enrolled in the FSS program (treatment group)	Up to 1,500.
Families receiving subsidized housing and not enrolled in the FSS program (control group)	Up to 1,500.

Estimation of the total number of hours needed to prepare the information collection including number of respondents, frequency of response, and hours of response:

Instrument	Number of respondents	Number responses per respondent	Average burden/response (in hours)	Total burden hours
Informed Consent Form (ICF)[1]	3,000	1	Up to 15 minutes (or .25 hours)	*750 hours.*

Instrument	Number of respondents	Number responses per respondent	Average burden/response (in hours)	Total burden hours
Baseline Information Form (includes completion of the Contact Sheet).	3,000	1	30 minutes, on average (or .50 hours). Approximately 45 minutes (or .75 hours) for larger households.	*2,250 hours*.
Tracking survey sample	3,000	1	Maximum of 1 hour over the tracking period, mainly to update contact information.	*3,000 hours*.
Implementation research (round 1 projected to occur in Year 3). Meetings could include: FSS coordinator; FSS case management staff; lead manager to whom the FSS coordinator reports; representatives of 4 key partner agencies; FSS participants.	20 per PHA (or 20 * 18 sites).	1	Field research visits will last two days. Meetings to run 30 to 60 minutes, depending on the group of participants.	*252 hours* or 14 hours (or 2 days) per site visit * 18 sites.
Cost-Benefit analysis data collection meetings with: FSS MIS/data analyst; FSS coordinator; FSS case management staff; lead manager to whom the FSS coordinator reports.	6 per PHA (or 6 * 18 sites).	1	Site visits will last 1 day. Meetings to run 30 to 60 minutes, depending on the group of participants.	*126 hours* or 7 hours (or 1 day) per site visit * 18 sites.

[1] We assume that the Informed Consent Form (ICF) will include language to enable us to collect administrative records from the designated state agency where the PHA is located. Therefore, the time to obtain this consent is included in the estimate to complete the ICF. Upon selection of sites, MDRC will contact the corresponding state agencies to initiate legal agreements to obtain these records, including the approved language to incorporate into the ICF.

Total 6,378 hours.

Status of the proposed information collection: Pending OMB approval.

Authority: Title 13 U.S.C. Section 9(a), and Title 12, U.S.C., Section 1701z-1 *et seq.*

Dated: December 3, 2012.

Erika C. Poethig,

Acting Assistant Secretary for Policy Development and Research.

[FR Doc. 2012–29791 Filed 12–7–12; 8:45 am]

BILLING CODE 4210–67–P

DEPARTMENT OF THE INTERIOR

Fish and Wildlife Service

[FWS–R6–ES–2012–N278: FXES11130600000D2–123–FF06E00000]

Endangered and Threatened Wildlife and Plants; Recovery Permit Application

AGENCY: Fish and Wildlife Service, Interior.

ACTION: Notice of availability; request for comments.

SUMMARY: We, the U.S. Fish and Wildlife Service, invite the public to comment on the following application to conduct certain activities with endangered or threatened species. The Endangered Species Act of 1973, as amended (Act), prohibits activities with endangered and threatened species unless a Federal permit allows such activity. The Act also requires that we invite public comment before issuing these permits.

DATES: To ensure consideration, please send your written comments by January 9, 2013.

ADDRESSES: You may submit comments or requests for copies or more information by any of the following methods. Alternatively, you may use one of the following methods to request hard copies or a CD–ROM of the documents. Please specify the permit you are interested in by number (*e.g.,* Permit No. TE–123456).

- Email: *permitsR6ES@fws.gov.* Please refer to the respective permit number (*e.g.,* Permit No. TE–123456) in the subject line of the message.
- U.S. Mail: Kris Olsen, Permit Coordinator, Ecological Services, U.S. Fish and Wildlife Service, P.O. Box 25486–DFC, Denver, CO 80225.
- In-Person Drop-off, Viewing, or Pickup: Call (303) 236–4256 to make an appointment during regular business hours at 134 Union Blvd., Suite 645, Lakewood, CO 80228.

FOR FURTHER INFORMATION CONTACT: Kris Olsen, Permit Coordinator Ecological Services, (303) 236–4256 (phone); *permitsR6ES@fws.gov* (email).

SUPPLEMENTARY INFORMATION:

Background

The Act (16 U.S.C. 1531 *et seq.*) prohibits activities with endangered and threatened species unless a Federal permit allows such activity. Along with our implementing regulations in the Code of Federal Regulations (CFR) at 50 CFR part 17, the Act provides for permits, and requires that we invite public comment before issuing these permits.

A permit granted by us under section 10(a)(1)(A) of the Act authorizes applicants to conduct activities with U.S. endangered or threatened species for scientific purposes, enhancement of propagation or survival, or interstate commerce (the latter only in the event that it facilitates scientific purposes or enhancement of propagation or survival). Our regulations implementing section 10(a)(1)(A) for these permits are found at 50 CFR 17.22 for endangered wildlife species, 50 CFR 17.32 for threatened wildlife species, 50 CFR 17.62 for endangered plant species, and 50 CFR 17.72 for threatened plant species.

Applications Available for Review and Comment

We invite local, State, and Federal agencies, and the public to comment on the following application. Please refer to the appropriate permit number (*e.g.,* Permit No. TE–123456) for the application when submitting comments.

Documents and other information the applicant has submitted with this application is available for review, subject to the requirements of the Privacy Act (5 U.S.C. 552a) and Freedom of Information Act (5 U.S.C. 552).

Permit Application Number: TE–131639

Applicant: Jane Darnell, U.S. Forest Service, Nebraska National Forest, Chadron, Nebraska.

The applicant requests renewal of an existing permit to take (remove and reduce to possession) *Penstemon haydenii* (Blowout penstemon) in Nebraska for the purpose of enhancing the species' survival.

National Environmental Policy Act (NEPA)

In compliance with NEPA (42 U.S.C. 4321 *et seq.*), we have made an initial determination that the proposed activities are categorically excluded from the requirement to prepare an environmental assessment or environmental impact statement (516 DM 6 Appendix 1, 1.4C(1)).

Public Availability of Comments

All comments and materials we receive in response to this request will be available for public inspection, by appointment, during normal business hours at the address listed in the **ADDRESSES** section of this notice.

Before including your address, phone number, email address, or other personal identifying information in your comment, you should be aware that your entire comment—including your personal identifying information—may be made publicly available at any time. While you can ask us in your comment to withhold your personal identifying information from public review, we cannot guarantee that we will be able to do so.

Authority

We provide this notice under section 10 of the Act (16 U.S.C. 1531 *et seq.*).

Dated: November 27, 2012.

Michael G. Thabault,

Assistant Regional Director, Mountain-Prairie Region.

[FR Doc. 2012–29715 Filed 12–7–12; 8:45 am]

BILLING CODE 4310–55–P

DEPARTMENT OF THE INTERIOR

Fish and Wildlife Service

[FWS–R6–ES–2012–N292; FXES11130600000D2–123–FF06E00000]

Endangered and Threatened Wildlife and Plants; Recovery Permit Application

AGENCY: Fish and Wildlife Service, Interior.

ACTION: Notice of availability; request for comments.

SUMMARY: We, the U.S. Fish and Wildlife Service, invite the public to comment on the following application to conduct certain activities with endangered or threatened species. The Endangered Species Act of 1973, as amended (Act), prohibits activities with endangered and threatened species unless a Federal permit allows such activity. The Act also requires that we invite public comment before issuing these permits.

DATES: To ensure consideration, please send your written comments by January 9, 2013.

ADDRESSES: You may submit comments or requests for copies or more information by any of the following methods. Alternatively, you may use one of the following methods to request hard copies or a CD–ROM of the documents. Please specify the permit you are interested in by number (e.g., Permit No. TE–123456).

- Email: *permitsR6ES@fws.gov*. Please refer to the respective permit number (e.g., Permit No. TE–123456) in the subject line of the message.
- U.S. Mail: Kris Olsen, Permit Coordinator, Ecological Services, U.S. Fish and Wildlife Service, P.O. Box 25486–DFC, Denver, CO 80225.
- In-Person Drop-off, Viewing, or Pickup: Call (303) 236–4256 to make an appointment during regular business hours at 134 Union Blvd., Suite 645, Lakewood, CO 80228.

FOR FURTHER INFORMATION CONTACT: Kris Olsen, Permit Coordinator Ecological Services, (303) 236–4256 (phone); *permitsR6ES@fws.gov* (email).

SUPPLEMENTARY INFORMATION:

Background

The Act (16 U.S.C. 1531 et seq.) prohibits activities with endangered and threatened species unless a Federal permit allows such activity. Along with our implementing regulations in the Code of Federal Regulations (CFR) at 50 CFR part 17, the Act provides for permits, and requires that we invite public comment before issuing these permits.

A permit granted by us under section 10(a)(1)(A) of the Act authorizes applicants to conduct activities with U.S. endangered or threatened species for scientific purposes, enhancement of propagation or survival, or interstate commerce (the latter only in the event that it facilitates scientific purposes or enhancement of propagation or survival). Our regulations implementing section 10(a)(1)(A) for these permits are found at 50 CFR 17.22 for endangered wildlife species, 50 CFR 17.32 for threatened wildlife species, 50 CFR 17.62 for endangered plant species, and 50 CFR 17.72 for threatened plant species.

Application Available for Review and Comment

We invite local, State, and Federal agencies, and the public to comment on the following application. Please refer to the appropriate permit number (e.g., Permit No. TE–123456) for the application when submitting comments.

Documents and other information the applicant has submitted are available for review, subject to the requirements of the Privacy Act (5 U.S.C. 552a) and Freedom of Information Act (5 U.S.C. 552).

Permit Application Number: TE–186282

Applicant: Zachary Cunningham, Nebraska Department of Roads, Lincoln, Nebraska

The applicant requests renewal of an existing permit to take (capture, hold, and tag) American burying beetle *(Nicrophorus americanus)* in Nebraska for the purpose of enhancing the species' survival.

National Environmental Policy Act (NEPA)

In compliance with NEPA (42 U.S.C. 4321 *et seq.*), we have made an initial determination that the proposed activities in this permit is categorically excluded from the requirement to prepare an environmental assessment or environmental impact statement (516 DM 6 Appendix 1, 1.4C(1)).

Public Availability of Comments

All comments and materials we receive in response to this request will be available for public inspection, by appointment, during normal business hours at the address listed in the **ADDRESSES** section of this notice.

Before including your address, phone number, email address, or other personal identifying information in your comment, you should be aware that your entire comment—including your personal identifying information—may be made publicly available at any time. While you can ask us in your comment to withhold your personal identifying information from public review, we cannot guarantee that we will be able to do so.

Authority

We provide this notice under section 10 of the Act (16 U.S.C. 1531 *et seq.*)

Dated: November 29, 2012.

Michael G. Thabault,

Assistant Regional Director, Mountain-Prairie Region.

[FR Doc. 2012–29717 Filed 12–7–12; 8:45 am]

BILLING CODE 4310–55–P

DEPARTMENT OF JUSTICE

Notice of Lodging of Proposed Consent Decrees Under the Comprehensive Environmental Response, Compensation, and Liability Act

On November 30, 2012, the United States Department of Justice lodged two proposed consent decrees with the United States District Court for the District of New Jersey in the lawsuit entitled *United States* v. *Rexam Inc., et al., Civil Action No.* 3:12-cv-07377–PGS–LHG. One of the two is a proposed consent decree between Plaintiff United States of America and Defendants International Paper Company and Georgia-Pacific Consumer Products, LP (collectively, ''IP/GP''), which provides for the performance of a remedial action, pursuant to the Comprehensive Environmental Response, Compensation and Liability Act, 42 U.S.C. 9601, *et seq.,* selected by the United States Environmental Protection Agency for the Crown Vantage Landfill Superfund Site, in Alexandria Township, Hunterdon County, New Jersey (''Site''), and payment of unreimbursed past response costs and future response costs in connection with the Site. The other is a proposed consent decree between Plaintiff United States of America and Defendant Rexam Inc. (''Rexam''), which provides for the payment of unreimbursed past response costs.

The publication of this notice opens a period for public comment on the consent decrees. Comments should be addressed to the Assistant Attorney General, Environment and Natural Resources Division, and should refer to *United States* v. *Rexam Inc., et al.,* D.J. Ref. No. 90–11–3–09445. All comments must be submitted no later than thirty (30) days after the publication date of this notice. Comments may be submitted either by email or by mail:

To submit comments:	Send them to:
By email	*pubcomment-ees.enrd@usdoj.gov.*
By mail	Assistant Attorney General, U.S. DOJ—ENRD, P.O. Box 7611, Washington, DC 20044–7611.

During the public comment period, the consent decrees may be examined and downloaded at this Justice Department Web site: *http://www.usdoj.gov/enrd/Consent_Decrees.html.* We will provide paper copies of the consent decrees upon written request and payment of reproduction costs. Please mail your request and payment to: Consent Decree Library, U.S. DOJ—ENRD, P.O. Box 7611, Washington, DC 20044–7611.

Please specify the consent decree(s) requested and enclose a check or money order for $22.75 (25 cents per page reproduction cost) for the IP/GP consent decree and/or $4.75 for the Rexam consent decree.

Ronald G. Gluck,

Assistant Section Chief, Environmental Enforcement Section, Environment and Natural Resources Division.

[FR Doc. 2012–29651 Filed 12–7–12; 8:45 am]

BILLING CODE 4410–15–P

DEPARTMENT OF JUSTICE

Notice of Lodging of Proposed Consent Decree Under the Comprehensive Environmental Response, Compensation, and Liability Act

On December 4, 2012, the Department of Justice lodged a proposed Consent Decree with the United States District Court for the District of Puerto Rico in the lawsuit entitled *United States* v. *Commonwealth of Puerto Rico, Puerto Rico Land Authority, Puerto Rico Housing Department, and Puerto Rico Electric Power Authority,* Civil Action No. 3:12-cv-01988.

The proposed Consent Decree memorializes a proposed settlement between the United States and Commonwealth of Puerto Rico, Puerto Rico Land Authority, Puerto Rico Housing Department, and Puerto Rico Electric Power Authority (''Settling Defendants''), with respect to the Vega Baja Solid Waste Disposal Superfund Site (''Site'') for injunctive relief pursuant to Section 106(a) of the Comprehensive Environmental Response, Compensation, and Liability Act of 1980, as amended (''CERCLA''), 42 U.S.C. 9606(a), response costs incurred by the United States pursuant to Section 107(a) of CERCLA, 42 U.S.C. 9607(a), and future response costs that may be incurred by the Plaintiff at the Site in the future, pursuant to Section 113(g)(2) of CERCLA, 42 U.S.C. 9613(g)(2).

The proposed settlement provides for the Settling Defendants to: (1) Pay $2,300,000 towards past costs; (2) conduct operation and maintenance (''O&M'') of the remedy at the Site (3) implement institutional controls (''ICs''); and (4) pay EPA's future response costs related to overseeing Settling Defendants' implementation of the O&M and ICs.

The publication of this notice starts a period for public comment on the Consent Decree. Comments should be addressed to the Assistant Attorney General, Environment and Natural Resources Division, and should refer to *United States* v. *Commonwealth of Puerto Rico, Puerto Rico Land Authority, Puerto Rico Housing Department, and Puerto Rico Electric Power Authority,* D.J. Ref. No. 90–11–3–07244/1. All comments must be submitted no later than thirty (30) days after the publication date of this notice. Comments may be submitted either by email or by mail:

To submit comments:	Send them to:
By e-mail	*pubcomment-ees.enrd@usdoj.gov.*
By mail	Assistant Attorney General, U.S. DOJ—ENRD, P.O. Box 7611, Washington, D.C. 20044–7611.

During the public comment period, the Consent Decree may be examined and downloaded at this Justice Department Web site: *http://www.usdoj.gov/enrd/Consent_Decrees.html.* We will provide a paper copy of the Consent Decree upon written request and payment of reproduction costs. Please mail your request and payment to: Consent Decree Library, U.S. DOJ—ENRD, P.O. Box 7611, Washington, DC 20044–7611.

Please enclose a check or money order for $11.25 (25 cents per page reproduction cost) payable to the United States Treasury.

Ronald G. Gluck,

Assistant Section Chief, Environmental Enforcement Section, Environment and Natural Resources Division.

[FR Doc. 2012–29711 Filed 12–7–12; 8:45 am]

BILLING CODE 4410–15–P

DEPARTMENT OF JUSTICE

Office of Justice Programs

[[OMB Number 1121–0140]

Agency Information Collection Activities: Proposed Collection; Comments Requested: OJP Standard Assurances Form

ACTION: 30-day notice.

The Department of Justice (DOJ), Office of Justice Programs (OJP), will be submitting the following information collection request to the Office of Management and Budget (OMB) for review and approval in accordance with the Paperwork Reduction Act of 1995.

The proposed information collection is published to obtain comments from the public and affected agencies. Comments are encouraged and will be accepted for thirty days (30) until February 8, 2013. This process is conducted in accordance with 5 CFR 1320.10.

If you have additional comments on the estimated public burden or associated response time, suggestions, or need a copy of the proposed information collection instrument with instructions or additional information, please contact: Kristopher Brambila, Attorney Advisor, U.S. Department of Justice, Office of Justice Programs, Office of the General Counsel, 810 7th Street NW., Washington, DC 20531.

Written comments and suggestions from the public and affected agencies concerning the proposed collection of information are encouraged. Your comments should address one or more of the following four points:

—Evaluate whether the proposed collection of information is necessary for the proper performance of the functions of the agency, including whether the information will have practical utility;
—Evaluate the accuracy of the agency's estimate of the burden of the proposed collection of information, including the validity of the methodology and assumptions used;
—Enhance the quality, utility, and clarity of the information to be collected; and
—Minimize the burden of the collection of information on those who are to respond, including through the use of appropriate automated, electronic, mechanical, or other technological collection techniques or other forms of information technology, e.g., permitting electronic submission of responses.

Overview of This Information:

(1) *Type of information collection:* Extension, without change of a currently approved collection.

(2) *The title of the form/collection:* OJP Standard Assurances.

(3) *Agency Form Number:* None. Component Sponsoring Collection: Office of Justice Programs, Department of Justice.

(4) *Affected public who will be asked or required to respond, as well as a brief abstract. Primary:* Applicants for grants funded by the Office of Justice Programs. *Other:* None. The purpose of the Standard Assurances form is to obtain the assurance/certification of each applicant for OJP funding that it will comply with the various crosscutting regulatory and statutory requirements that apply to OJP grantees, and to set out in one easy-to-reference document those requirements that most frequently impact OJP grantees.

(5) *An estimate of the total number of respondents and the amount of time estimated for an average respondent to respond/reply:* Total of 8,250 respondents estimated, at 20 minutes each.

(6) *An estimate of the total public burden (in hours) associated with the collection:* The estimated total public burden associated with this information is 3,500.

If additional information is required contact: Jerri Murray, Department Clearance Officer, United States Department of Justice, Justice Management Division, Policy and Planning Staff, Two Constitution Square, 145 N Street NE., Room 3W–1407B, Washington, DC 20530.

December 5, 2012.

Jerri Murray,

Department Clearance Officer for PRA, U.S. Department of Justice.

[FR Doc. 2012–29735 Filed 12–7–12; 8:45 am]

BILLING CODE 4410–18–P

DEPARTMENT OF JUSTICE

Office of Justice Programs

[OJP (OJP) Docket No. 1611]

Meeting of the Office of Justice Programs' Science Advisory Board

AGENCY: Office of Justice Programs (OJP), Justice.

ACTION: Notice of meeting.

SUMMARY: This notice announces a forthcoming meeting of OJP's Science Advisory Board (''Board''). *General Function of the Board:* The Board is chartered to provide OJP, a component of the Department of Justice, with valuable advice in the areas of science and statistics for the purpose of enhancing the overall impact and performance of its programs and activities in criminal and juvenile justice. To this end, the Board has designated six (6) subcommittees: National Institute of Justice (NIJ); Bureau of Justice Statistics (BJS); Office of Juvenile Justice and Delinquency Prevention (OJJDP); Bureau of Justice Assistance; Quality and Protection of Science; and Evidence Translation/Integration.

DATES: The meeting will take place on Friday, January 11, 2013, from 8:30 a.m. to 4:00 p.m., ET, with a break for lunch at approximately noon.

ADDRESSES: The meeting will take place in the Video Conference Room on the third floor of the Office of Justice Programs, 810 7th Street Northwest, Washington, DC 20531.

FOR FURTHER INFORMATION CONTACT: Marlene Beckman, Designated Federal Officer (DFO), Office of the Assistant Attorney General, Office of Justice Programs, 810 7th Street Northwest, Washington, DC 20531; Phone: (202) 616–3562 [**Note:** this is not a toll-free number]; Email: *marlene.beckman@usdoj.gov.*

SUPPLEMENTARY INFORMATION: This meeting is being convened to brief the OJP Assistant Attorney General and the Board members on the progress of the subcommittees, discuss any recommendations they may have for consideration by the full SAB, and brief the Board on various OJP-related projects and activities. The final agenda is subject to adjustment, but it is anticipated that there will be a morning session and an afternoon session, with a break for lunch. These sessions will likely include briefings of the subcommittees' activities and discussion of future SAB actions and priorities.

This meeting is open to the public. Members of the public who wish to attend this meeting must register with Marlene Beckman at the above address at least seven (7) days in advance of the meeting. Registrations will be accepted on a space available basis. Access to the meeting will not be allowed without registration. Persons interested in communicating with the Board should submit their written comments to the DFO, as the time available will not allow the public to directly address the Board at the meeting. Anyone requiring special accommodations should notify Ms. Beckman at least seven (7) days in advance of the meeting.

Dated: December 4, 2012.

Marlene Beckman,

Counsel and SAB DFO, Office of the Assistant Attorney General, Office of Justice Programs.

[FR Doc. 2012–29724 Filed 12–7–12; 8:45 am]

BILLING CODE 4410–18–P

NUCLEAR REGULATORY COMMISSION

Advisory Committee on Reactor Safeguards (ACRS); Meeting of the ACRS Subcommittee on US–APWR; Notice of Meeting

The ACRS Subcommittee on US–APWR will hold a meeting on January 15, 2013, Room T–2B3, 11545 Rockville Pike, Rockville, Maryland.

The meeting will be open to public attendance, with the exception of a

portion that may be closed to protect information that is propriety pursuant to 5 U.S.C. 552(c)(4). The agenda for the subject meeting shall be as follows:

Tuesday, January 15, 2013—8:30 a.m. Until 5:00 p.m.

The Subcommittee will discuss the staff's review of Topical Report MUAP–07009, ''Mitsubishi Thermal Design Methodology.'' The Subcommittee will also receive an informational briefing on Topical Report, MUAP–07034, ''FINDS: Mitsubishi Fuel Assemblies Seismic Analysis Code.'' Both Topical Reports are associated with the design certification of the US–APWR. The Subcommittee will hear presentations by and hold discussions with representatives of the NRC staff, Luminant Generation Company LLC, and Mitsubishi Heavy Industries (MHI) regarding this matter. The Subcommittee will gather information, analyze relevant issues and facts, and formulate proposed positions and actions, as appropriate, for deliberation by the Full Committee.

Members of the public desiring to provide oral statements and/or written comments should notify the Designated Federal Official (DFO), Girija Shukla (Telephone 301–415–6855 or Email: *Girija.Shukla@nrc.gov*) five days prior to the meeting, if possible, so that appropriate arrangements can be made. Thirty-five hard copies of each presentation or handout should be provided to the DFO thirty minutes before the meeting. In addition, one electronic copy of each presentation should be emailed to the DFO one day before the meeting. If an electronic copy cannot be provided within this timeframe, presenters should provide the DFO with a CD containing each presentation at least thirty minutes before the meeting. Electronic recordings will be permitted only during those portions of the meeting that are open to the public. Detailed procedures for the conduct of and participation in ACRS meetings were published in the **Federal Register** on October 18, 2012, (77 FR 64146–64147).

Detailed meeting agendas and meeting transcripts are available on the NRC Web site at *http://www.nrc.gov/reading-rm/doc-collections/acrs.* Information regarding topics to be discussed, changes to the agenda, whether the meeting has been canceled or rescheduled, and the time allotted to present oral statements can be obtained from the Web site cited above or by contacting the identified DFO. Moreover, in view of the possibility that the schedule for ACRS meetings may be adjusted by the Chairman as necessary to facilitate the conduct of the meeting, persons planning to attend should check with these references if such rescheduling would result in a major inconvenience.

If attending this meeting, please enter through the One White Flint North building, 11555 Rockville Pike, Rockville, MD. After registering with security, please contact Mr. Theron Brown (Telephone 240–888–9835) to be escorted to the meeting room.

Dated: November 30, 2012.

Antonio Dias,

Technical Advisor, Advisory Committee on Reactor Safeguards.

[FR Doc. 2012–29725 Filed 12–7–12; 8:45 am]

BILLING CODE 7590–01–P

SECURITIES AND EXCHANGE COMMISSION

Sunshine Act Meeting

Notice is hereby given, pursuant to the provisions of the Government in the Sunshine Act, Public Law 94–409, that the Securities and Exchange Commission will hold a Closed Meeting on Thursday, December 13, 2012 at 2:00 p.m.

Commissioners, Counsel to the Commissioners, the Secretary to the Commission, and recording secretaries will attend the Closed Meeting. Certain staff members who have an interest in the matters also may be present.

The General Counsel of the Commission, or his designee, has certified that, in his opinion, one or more of the exemptions set forth in 5 U.S.C. 552b(c)(3), (5), (7), 9(B) and (10) and 17 CFR 200.402(a)(3), (5), (7), 9(ii) and (10), permit consideration of the scheduled matters at the Closed Meeting.

Commissioner Aguilar, as duty officer, voted to consider the items listed for the Closed Meeting in a closed session.

The subject matter of the Closed Meeting will be:

Adjudicatory matters;
Institution and settlement of injunctive actions;
Institution and settlement of administrative proceedings; and other matters relating to enforcement proceedings.

At times, changes in Commission priorities require alterations in the scheduling of meeting items.

For further information and to ascertain what, if any, matters have been added, deleted or postponed, please contact: The Office of the Secretary at (202) 551–5400.

Dated: December 6, 2012.

Kevin M. O'Neill,

Deputy Secretary.

[FR Doc. 2012–29859 Filed 12–6–12; 4:15 pm]

BILLING CODE 8011–01–P

SECURITIES AND EXCHANGE COMMISSION

[Release No. 34–68350; File No. SR–CBOE–2012–117]

Self-Regulatory Organizations; Chicago Board Options Exchange, Incorporated; Notice of Filing and Immediate Effectiveness of a Proposed Rule Change To Amend Its Rule Related to Multi-Class Broad-Based Index Option Spread Orders

December 4, 2012.

Pursuant to Section 19(b)(1) of the Securities Exchange Act of 1934 (the ''Act''),[1] and Rule 19b–4 thereunder,[2] notice is hereby given that on November 29, 2012, Chicago Board Options Exchange, Incorporated (the ''Exchange'' or ''CBOE'') filed with the Securities and Exchange Commission (the ''Commission'') the proposed rule change as described in Items I, II, and III below, which Items have been prepared by the Exchange. The Commission is publishing this notice to solicit comments on the proposed rule change from interested persons.

I. Self-Regulatory Organization's Statement of the Terms of the Substance of the Proposed Rule Change

The Exchange proposes to amend its rule related to multi-class broad-based index option spread orders. The text of the proposed rule change is available on the Exchange's Web site (*http://www.cboe.com/AboutCBOE/CBOELegalRegulatoryHome.aspx*), at the Exchange's Office of the Secretary, and at the Commission.

II. Self-Regulatory Organization's Statement of the Purpose of, and Statutory Basis for, the Proposed Rule Change

In its filing with the Commission, the Exchange included statements concerning the purpose of and basis for the proposed rule change and discussed any comments it received on the proposed rule change. The text of these statements may be examined at the places specified in Item IV below. The Exchange has prepared summaries, set forth in sections A, B, and C below, of the most significant aspects of such statements.

[1] 15 U.S.C. 78s(b)(1).

[2] 17 CFR 240.19b–4.

A. Self-Regulatory Organization's Statement of the Purpose of, and Statutory Basis for, the Proposed Rule Change

1. Purpose

The purpose of this rule filing is to (i) clarify that the term ''Multi-Class Broad-Based Index Option Spread Order (Multi-Class Spread Order)'' may refer to either an order or a quote; (ii) clarify who Trading Permit Holders (''TPHs'') initiating a Multi-Class Spread Order in the primary trading station must notify in the secondary trading station; (iii) provide that the recipient Order Book Official (''OBO''), Designated Primary Market-Maker (''DPM'') or Exchange staff in the secondary trading station must verbalize the terms of a Multi-Class Spread Order to the secondary trading crowd; and (iv) require that the recipient OBO, DPM or Exchange staff in the secondary trading station document the terms of the order.

Exchange Rule 24.19 describes a Multi-Class Spread Order as ''an order'' to buy a stated number of contracts of a Broad-Based Index Option and sell an equal number, or an equivalent number, of contracts of a different Broad-Based Index Option. Market-Makers however, may also enter a ''Multi-Class Spread Order'' quote. Accordingly, the Exchange is seeking to clarify in its rules that the term ''Multi-Class Spread Order'' may refer to either an order or a quote, thereby maintaining clarity in the rules and reducing potential confusion.

The Exchange is also seeking to clarify the procedure for which notice regarding a Multi-Class Spread Order is given to the trading crowd at a secondary trading station. Rule 24.19 provides that a Multi-Class Spread Order may be represented at the trading station of either Broad-Based Index, subject to certain conditions. First, Rule 24.19(b)(i) currently requires that upon an announcement of a Multi-Class Spread Order at the primary trading station, the TPH initiating the order must contact either an OBO or the DPM at the secondary trading station, who then must disseminate notice of the order to the secondary trading crowd. In some classes however, it is possible that neither an OBO nor DPM is assigned. Therefore, the Exchange is proposing to clarify that, in addition to an OBO or DPM, a TPH may contact otherwise appropriate Exchange staff (e.g. PAR official or trading official). Trading stations which do not have an OBO or DPM assigned must ensure that an appropriate Exchange staff is present for purposes of disseminating a notice of a Multi-Class Spread Order. The proposed rule change would reduce confusion, as well as provide guidance in situations where neither an OBO nor DPM exists.

Next, the Exchange proposes to specify the manner in which the recipient OBO, DPM, or Exchange staff in the secondary trading station must disseminate a notice of a Multi-Class-Spread Order. The proposed rule change requires the recipient OBO, DPM, or Exchange staff in the secondary trading station to verbalize the terms of the order to the secondary trading crowd. This proposed change ensures adequate dissemination of a notice of an order and its terms and promotes transparency. Finally, the Exchange seeks to require that the recipient OBO, DPM, or Exchange staff document the terms of the order for purposes of record retention and aiding surveillance.

2. Statutory Basis

The proposed rule change is consistent with Section 6(b) of the Act, in general. Specifically, the Exchange believes the proposed rule change is consistent with the Section 6(b)(5) requirements that the rules of an exchange be designed to promote just and equitable principles of trade, to prevent fraudulent and manipulative acts, to remove impediments to and to perfect the mechanism for a free and open market and a national market system, and, in general, to protect investors and the public interest. Clarifying that a ''Multi-Class Spread Order'' may refer to an order or a quote should clear up any potential confusion and therefore inform investors. Clarifying and specifying the procedures in which a notice of a Multi-Class Spread Order is disseminated and documented also reduces potential confusion and maintains clarity in the rules. Further, it promotes transparency and aids in surveillance, thereby protecting investors.

B. Self-Regulatory Organization's Statement on Burden on Competition

CBOE does not believe that the proposed rule change will impose any burden on competition that is not necessary or appropriate in furtherance of the purposes of the Act.

C. Self-Regulatory Organization's Statement on Comments on the Proposed Rule Change Received From Members, Participants, or Others

The Exchange neither solicited nor received comments on the proposed rule change.

III. Date of Effectiveness of the Proposed Rule Change and Timing for Commission Action

Because the foregoing proposed rule change does not:

(i) Significantly affect the protection of investors or the public interest;

(ii) impose any significant burden on competition; and

(iii) become operative for 30 days from the date on which it was filed, or such shorter time as the Commission may designate, it has become effective pursuant to Section 19(b)(3)(A) [3] of the Act and Rule 19b–4(f)(6) [4] thereunder.

At any time within 60 days of the filing of this proposed rule change, the Commission summarily may temporarily suspend such rule change if it appears to the Commission that such action is necessary or appropriate in the public interest, for the protection of investors, or otherwise in furtherance of the purposes of the Act.

IV. Solicitation of Comments

Interested persons are invited to submit written data, views, and arguments concerning the foregoing, including whether the proposed rule change is consistent with the Act. Comments may be submitted by any of the following methods:

Electronic Comments

- Use the Commission's Internet comment form (*http://www.sec.gov/rules/sro.shtml*); or
- Send an email to *rule-comments@sec.gov.* Please include File Number SR–CBOE–2012–117 on the subject line.

Paper Comments

- Send paper comments in triplicate to Elizabeth M. Murphy, Secretary, Securities and Exchange Commission, 100 F Street NE., Washington, DC 20549–1090.

All submissions should refer to File Number SR–CBOE–2012–117. This file number should be included on the subject line if email is used. To help the Commission process and review your comments more efficiently, please use only one method. The Commission will post all comments on the Commission's Internet Web site (*http://www.sec.gov/rules/sro.shtml).* Copies of the submission, all subsequent amendments, all written statements with respect to the proposed rule change that are filed with the Commission, and all written communications relating to the proposed rule change between the

[3] 15 U.S.C. 78s(b)(3)(A).

[4] 17 CFR 240.19b–4(f)(6).

Commission and any person, other than those that may be withheld from the public in accordance with the provisions of 5 U.S.C. 552, will be available for Web site viewing and printing in the Commission's Public Reference Room on official business days between the hours of 10:00 a.m. and 3:00 p.m. Copies of such filing also will be available for inspection and copying at the principal offices of the Exchange. All comments received will be posted without change; the Commission does not edit personal identifying information from submissions. You should submit only information that you wish to make available publicly. All submissions should refer to File Number SR–CBOE–2012–117, and should be submitted on or before December 31, 2012.

For the Commission, by the Division of Trading and Markets, pursuant to delegated authority.[5]

Kevin M. O'Neill,

Deputy Secretary.

[FR Doc. 2012–29701 Filed 12–7–12; 8:45 am]

BILLING CODE 8011–01–P

SECURITIES AND EXCHANGE COMMISSION

[Release No. 34–68351; File No. SR–NYSEArca–2012–131]

Self-Regulatory Organizations; NYSE Arca, Inc.; Notice of Filing of Proposed Rule Change Relating to Listing and Trading of Shares of the Horizons S&P 500 Covered Call ETF, Horizons S&P Financial Select Sector Covered Call ETF, and Horizons S&P Energy Select Sector Covered Call ETF Under NYSE Arca Equities Rule 5.2(j)(3)

December 4, 2012.

Pursuant to Section 19(b)(1) of the Securities Exchange Act of 1934 (''Act'' or ''Exchange Act'')[1] and Rule 19b–4 thereunder,[2] notice is hereby given that, on November 21, 2012, NYSE Arca, Inc. (''Exchange'' or ''NYSE Arca'') filed with the Securities and Exchange Commission (''Commission'') the proposed rule change as described in Items I, II, and III below, which Items have been prepared by the Exchange. The Commission is publishing this notice to solicit comments on the proposed rule change from interested persons.

[5] 17 CFR 200.30–3(a)(12).

[1] 15 U.S.C. 78s(b)(1).

[2] 17 CFR 240.19b–4.

I. Self-Regulatory Organization's Statement of the Terms of Substance of the Proposed Rule Change

The Exchange proposes to list and trade shares (''Shares'') of the Horizons S&P 500 Covered Call ETF, Horizons S&P Financial Select Sector Covered Call ETF, and Horizons S&P Energy Select Sector Covered Call ETF under NYSE Arca Equities Rule 5.2(j)(3). The text of the proposed rule change is available on the Exchange's Web site at *www.nyse.com,* at the principal office of the Exchange, and at the Commission's Public Reference Room.

II. Self-Regulatory Organization's Statement of the Purpose of, and Statutory Basis for, the Proposed Rule Change

In its filing with the Commission, the self-regulatory organization included statements concerning the purpose of, and basis for, the proposed rule change and discussed any comments it received on the proposed rule change. The text of those statements may be examined at the places specified in Item IV below. The Exchange has prepared summaries, set forth in sections A, B, and C below, of the most significant parts of such statements.

A. Self-Regulatory Organization's Statement of the Purpose of, and Statutory Basis for, the Proposed Rule Change

1. Purpose

The Exchange proposes to list and trade the Shares of the Horizons S&P 500® Covered Call ETF, Horizons S&P Financial Select Sector Covered Call ETF, and Horizons S&P Energy Select Sector Covered Call ETF (each, a ''Fund'' and collectively, ''Funds'') under NYSE Arca Equities Rule 5.2(j)(3), the Exchange's listing standards for Investment Company Units (''Units'').[3]

The Shares will be offered by Exchange Traded Concepts Trust II (''Trust''), which is organized as a Delaware statutory trust and is registered with the Commission as an open-end management investment company.[4] The investment adviser to the Funds is Exchange Traded Concepts, LLC (''Adviser'').[5] The sub-adviser to the Funds is Horizons ETFs Management (USA) LLC (''Sub-Adviser'').[6] Foreside Fund Services, LLC (''Distributor'') is the principal underwriter and distributor of the Funds' Shares. Citi Fund Services Ohio, Inc. (''Administrator'') will serve as administrator for the Funds; Citibank, NA (''Custodian'') will serve as custodian for the Funds; and Citi Fund Services Ohio, Inc. (''Transfer Agent'') will serve as transfer agent for the Funds.

As described below, each Fund will seek investment results that, before fees and expenses, generally correspond to the performance of a specified index (each, an ''Underlying Index'') provided by S&P Dow Jones Indices LLC (''Index

[3] An Investment Company Unit is a security that represents an interest in a registered investment company that holds securities comprising, or otherwise based on or representing an interest in, an index or portfolio of securities (or holds securities in another registered investment company that holds securities comprising, or otherwise based on or representing an interest in, an index or portfolio of securities). *See* NYSE Arca Equities Rule 5.2(j)(3)(A).

[4] The Trust is registered under the Investment Company Act of 1940 (15 U.S.C. 80a–1) (''1940 Act''). On September 10, 2012, the Trust filed with the Commission an amendment to its Form N–1A under the Securities Act of 1933 (15 U.S.C. 77a) and under the 1940 Act relating to the Funds (File Nos. 333–180871 and 811–22700) (''Registration Statement''). The description of the operation of the Trust and the Funds herein is based, in part, on the Registration Statement. In addition, the Commission has issued an order granting certain exemptive relief to the Trust under the 1940 Act. *See* Investment Company Act Release No. 29065 (Dec. 1, 2009) (File No. 812–13638) (''Exemptive Order'').

[5] The Adviser is affiliated with a broker-dealer and has implemented a fire wall with respect to its broker-dealer affiliate regarding access to information concerning the portfolio holdings of the Funds. The Sub-Adviser (as defined herein) is affiliated with a broker-dealer and has implemented a fire wall with respect to its broker dealer affiliate regarding access to information concerning the portfolio holdings of the Funds. In the event (a) the Adviser or Sub-Adviser becomes newly affiliated with a broker-dealer, or (b) any new adviser or sub-adviser becomes affiliated with a broker-dealer, it will implement a fire wall with respect to such broker-dealer regarding access to information concerning the portfolio holdings of the Funds, and will be subject to procedures designed to prevent the use and dissemination of material, non-public information regarding such portfolios.

[6] An investment adviser to an open-end fund is required to be registered under the Investment Advisers Act of 1940 (''Advisers Act''). As a result, the Adviser, Sub-Adviser, and their related personnel are subject to the provisions of Rule 204A–1 under the Advisers Act relating to codes of ethics. This Rule requires investment advisers to adopt a code of ethics that reflects the fiduciary nature of the relationship to clients as well as compliance with other applicable securities laws. Accordingly, procedures designed to prevent the communication and misuse of non-public information by an investment adviser must be consistent with Rule 204A–1 under the Advisers Act. In addition, Rule 206(4)–7 under the Advisers Act makes it unlawful for an investment adviser to provide investment advice to clients unless such investment adviser has (i) adopted and implemented written policies and procedures reasonably designed to prevent violation, by the investment adviser and its supervised persons, of the Advisers Act and the Commission rules adopted thereunder; (ii) implemented, at a minimum, an annual review regarding the adequacy of the policies and procedures established pursuant to subparagraph (i) above and the effectiveness of their implementation; and (iii) designated an individual (who is a supervised person) responsible for administering the policies and procedures adopted under subparagraph (i) above.

Provider'').[7] Each Underlying Index is comprised of all the equity securities in one of the S&P 500 Index, S&P Financial Select Sector Index, or S&P Energy Select Sector Index (each, a ''Reference Index'') and short (written) call options on each of the option eligible securities in the relevant Reference Index that meet, among others, stock and option price criteria of the Underlying Index methodology.[8]

The Exchange is submitting this proposed rule change because the Underlying Indices for the Funds do not meet all of the ''generic'' listing requirements of Commentary .01(a)(A) to NYSE Arca Equities Rule 5.2(j)(3) applicable to the listing of Units based upon an index of US Component Stocks.[9] Specifically, Commentary .01(a)(A) to NYSE Arca Equities Rule 5.2(j)(3) [10] sets forth the requirements to be met by components of an index or portfolio of US Component Stocks. The Underlying Indices consist of the constituent securities of the S&P 500, S&P Financial Select Sector, and S&P Energy Select Sector Indices. The Underlying Indices meet all requirements of NYSE Arca Equities Rule 5.2(j)(3) and Commentary .01(a)(A) thereto, except that the Underlying Indices include call options, which are not NMS Stocks as defined in Rule 600 of Regulation NMS. As described below, each Underlying Index is comprised solely of S&P 500 companies and includes an exposure to call options on the option eligible securities of companies in the respective Reference Index that meet, among others, the stock and option price criteria of the Underlying Index methodology. All securities in the Reference Indices are listed and traded on a U.S. national securities exchange. The options on the option eligible securities of companies in the Reference Indices are traded on a U.S. national options exchange. Notwithstanding that the Underlying Indices do not meet all of the generic listing requirements of Commentary .01(a)(A) to NYSE Arca Equities Rule 5.2(j)(3), the Exchange believes that the Underlying Indices are sufficiently broad-based to deter potential manipulation in that the Reference Indices stocks are among the most actively traded, highly capitalized stocks traded in the U.S. The market value of the call options will not represent more than 10% of the total weight of any of the Underlying Indices.

Horizons S&P 500 Covered Call ETF

According to the Registration Statement, the Horizons S&P 500 Covered Call ETF will seek investment results that, before fees and expenses, generally correspond to the performance of the Fund's Underlying Index, which is the S&P 500 Stock Covered Call Index. The Fund seeks correlation of 0.95 or better between its performance and the performance of its Underlying Index. A figure of 1.00 would represent perfect correlation. As described below, the Underlying Index is comprised of all the equity securities [11] in the Fund's Reference Index, which is the S&P 500 Index, and short (written) call options on each of the option eligible securities in the Reference Index that meet, among others, the stock and option price criteria of the Underlying Index methodology.[12]

According to the Registration Statement, the Fund will invest at least 80% of its total assets in securities that comprise its Underlying Index.

According to the Registration Statement, the Reference Index for the Fund is a float-adjusted market capitalization weighted index containing equity securities of 500 industrial, information technology, utility, and financial companies amongst other Global Industry Classification Standard (''GICS®'') sectors, regarded as generally representative of the U.S. stock market. A float-adjusted market capitalization weighted index weights each index component according to its market capitalization, using the number of shares that are readily available for purchase on the open market.

According to the Registration Statement, the Underlying Index for the Fund measures the performance of a hypothetical portfolio that employs a covered call strategy. It consists of long positions in companies in the Reference Index and out-of-the-money call options [13] that are written (sold) systematically on the option eligible securities of companies in the Reference Index that meet, among others, the stock and option price criteria of the Underlying Index methodology.

According to the Registration Statement, the Fund will be an index fund that employs a ''passive management'' investment strategy in seeking to achieve its objective. According to the Registration Statement, the Adviser's strategy will consist of holding an equity portfolio indexed to the Reference Index and writing (selling) covered call options on these equity securities, which options will be indexed to the Underlying Index, generally one standard deviation ''out-of-the-money.'' [14] Options are written systematically ''out-of-the-money'' in accordance with the index methodology based on the prevailing individual level of volatility for each of the equity securities. The Underlying Index provides a benchmark measure of the total return of this hypothetical portfolio.

According to the Registration Statement, because a covered call strategy generates income in the form of premiums on the written options, the Underlying Index is generally expected to provide higher total returns with lower volatility than the Reference Index in most market environments,

[7] Each of the Underlying Indices is provided by the Index Provider, which is unaffiliated with the Funds, the Adviser, or the Sub-Adviser. The Index Provider maintains, calculates, and publishes information regarding each of the Underlying Indices. The Index Provider is not a broker-dealer and is not affiliated with a broker-dealer and has implemented procedures designed to prevent the use and dissemination of material, non-public information regarding the Underlying Indices.

[8] The Underlying Index methodology is available at *www.standardandpoors.com/indices.* As of October 26, 2012, such criteria include, among others, that no call options will be written if the equity security price is less than $10, and no call options will be written at prices below $0.15. The Index Provider may amend the methodology from time to time. In such case, the methodology would be updated accordingly on the Web site.

[9] NYSE Arca Equities Rule 5.2(j)(3) provides that the term ''US Component Stock'' shall mean an equity security that is registered under Sections 12(b) or 12(g) of the Exchange Act or an American Depositary Receipt, the underlying equity security of which is registered under Sections 12(b) or 12(g) of the Exchange Act.

[10] Commentary .01(a)(A) to NYSE Arca Equities Rule 5.2(j)(3) states, in part, that the components of an index of US Component Stocks, upon the initial listing of a series of Units pursuant to Rule 19b-4(e) under the Exchange Act shall be NMS Stocks as defined in Rule 600 of Regulation NMS under the Exchange Act.

[11] According to the Reference Index methodology, ''equity securities'' includes all U.S. common equities listed on the Exchange, the New York Stock Exchange, NYSE MKT, the NASDAQ Global Select Market, the NASDAQ Select Market, and the NASDAQ Capital Market. Business development companies and real estate investment trusts (''REITs'') are eligible for inclusion as equity securities, with the exception of mortgage REITs. Corporate actions will be handled in the same manner as the index.

[12] *See* note 8, *supra.*

[13] An ''out-of-the-money'' call option is one in which the exercise (or ''strike'') price of the option is above the market price of the security.

[14] A covered call strategy is generally considered to be an investment strategy in which an investor buys a security, and sells a call option that corresponds to the security. In return for a premium, the Fund will give the purchaser of the option written by the Fund either the right to buy the security from the Fund at an exercise price or the right to receive a cash payment equal to the difference between the value of the security and the exercise (or ''strike'') price, if the value is above the exercise price on or before the expiration date of the option. In addition, the covered call options hedge against a decline in the price of the securities on which they are written to the extent of the premium the Fund receives. A covered call strategy is generally used in a neutral-to-bullish market environment, where a slow and steady rise in market prices is anticipated.

with the exception of when the equity market is rallying rapidly. The options in the Underlying Index will be traded on national securities exchanges. As of August 31, 2012, the Reference Index and Underlying Index included common stocks of 500 companies, 499 of which are option eligible, with a market capitalization range of between approximately $1 billion and $622 billion. As of that date, the Underlying Index also included short (written) call options on 434 option eligible securities of the Reference Index, representing 0.6% of the total weight [15] of the Underlying Index.

According to the Registration Statement, the Fund will generally use a replication methodology, meaning it will invest in all of the securities comprising the Underlying Index in proportion to the weightings in the Underlying Index. However, the Fund may from time-to-time utilize a sampling methodology under various circumstances where it may not be possible or practicable to purchase all of the equity securities and write (sell) all of the call options comprising the Underlying Index.

According to the Registration Statement, the Fund will concentrate its investments (*i.e.,* hold 25% or more of its total assets) in a particular industry or group of industries to approximately the same extent that the Underlying Index is so concentrated. The Fund will be non-diversified under the 1940 Act and, therefore, may invest a greater percentage of its assets in a particular issue in comparison to a ''diversified'' fund.[16] Moreover, according to the Registration Statement, in pursuing its objective, the Fund may hold the securities of a single issuer in an amount exceeding 10% of the outstanding voting securities of the issuer, subject to restrictions imposed by the Internal Revenue Code of 1986, as amended (''Code'').

Horizons S&P Financial Select Sector Covered Call ETF

According to the Registration Statement, the Horizons S&P Financial Select Sector Covered Call ETF will seek investment results that, before fees and expenses, generally correspond to the performance of the Fund's Underlying Index, which is the S&P 500 Financial Select Sector Stock Covered Call Index. The Fund seeks correlation of 0.95 or better between its performance and the performance of its Underlying Index. A figure of 1.00 would represent perfect correlation. As described below, the Underlying Index is comprised of all the equity securities [17] in the Fund's Reference Index, which is the S&P Financial Select Sector Index, and short (written) call options on the option eligible securities of companies in the Reference Index that meet, among others, the stock and option price criteria of the Underlying Index methodology.[18]

According to the Registration Statement, the Fund will invest at least 80% of its total assets in the securities that comprise its Underlying Index. According to the Registration Statement, the Reference Index for the Fund is a rules-based, modified market capitalization weighted index that is designed to track the movements of public companies that are components of the S&P 500 Index and are classified in the GICS® sector, Financials. A modified market capitalization weighted index first weights each index component according to its market capitalization, using the number of shares that are readily available for purchase on the open market, then imposes limits on the weight of individual index components and redistributes any excess weight across the remaining index components. A wide array of diversified financial service firms are featured in this sector with business lines ranging from investment management to commercial and investment banking.

According to the Registration Statement, the Underlying Index for the Fund measures the performance of a hypothetical portfolio that employs a covered call strategy. It consists of long positions in companies in the Reference Index and out-of-the-money call options [19] that are written (sold) systematically on the option eligible securities of companies in the Reference Index that meet, among others, the stock and option price criteria of the Underlying Index methodology.

According to the Registration Statement, the Fund will be an index fund that employs a ''passive management'' investment strategy in seeking to achieve its objective. According to the Registration Statement, the Adviser's strategy will consist of holding an equity portfolio indexed to the Reference Index and writing (selling) covered call options on these equity securities indexed to the Underlying Index, which options will be generally one standard deviation ''out-of-the-money.'' [20] Options are written systematically ''out-of-the-money'' in accordance with the index methodology based on the prevailing individual level of volatility for each of the equity securities. The Underlying Index provides a benchmark measure of the total return of this hypothetical portfolio.

According to the Registration Statement, because a covered call strategy generates income in the form of premiums on the written options, the Underlying Index is generally expected to provide higher total returns with lower volatility than the Reference Index in most market environments, with the exception of when the equity market is rallying rapidly. The options in the Underlying Index will be traded on national securities exchanges. As of August 31, 2012, the Reference Index and Underlying Index included common stocks of 81 companies, of which all 81 are option eligible, with a market capitalization range of between approximately $2 billion and $181 billion. As of that date, the Underlying Index also included short (written) call options on 65 option eligible securities of the Reference Index, representing 0.7% of the total weight [21] of the Underlying Index.

According to the Registration Statement, the Fund will generally use a replication methodology, meaning it will invest in all of the securities comprising the Underlying Index in proportion to the weightings in the Underlying Index. However, the Fund may from time-to-time utilize a sampling methodology under various circumstances where it may not be possible or practicable to purchase all of the equity securities and write (sell) all of the call options comprising the Underlying Index.

According to the Registration Statement, the Fund will concentrate its investments (*i.e.,* hold 25% or more of its total assets) in a particular industry or group of industries to approximately the same extent that the Underlying Index is so concentrated. The Fund will be non-diversified under the 1940 Act and, therefore, may invest a greater percentage of its assets in a particular issue in comparison to a ''diversified'' fund.[22] Moreover, according to the Registration Statement, in pursuing its objective, the Fund may hold the securities of a single issuer in an amount exceeding 10% of the outstanding voting securities of the

[15] This calculation is based on the absolute value of the short call option position which has a negative mark-to-market value.

[16] The diversification standard is set forth in Section 5(b)(1) of the 1940 Act (15 U.S.C. 80a–5).

[17] *See* note 11, *supra.*

[18] *See* note 8, *supra.*

[19] *See* note 13, *supra.*

[20] *See* note 14, *supra.*

[21] *See* note 15, *supra.*

[22] *See* note 16, *supra.*

issuer, subject to restrictions imposed by the Code.

Horizons S&P Energy Select Sector Covered Call ETF

According to the Registration Statement, the Horizons S&P Energy Select Sector Covered Call ETF will seek investment results that, before fees and expenses, generally correspond to the performance of the Fund's Underlying Index, which is the S&P 500 Energy Select Sector Stock Covered Call Index. The Fund seeks correlation of 0.95 or better between its performance and the performance of its Underlying Index. A figure of 1.00 would represent perfect correlation. As described below, the Underlying Index is comprised of all the equity securities [23] in the Fund's Reference Index, which is the S&P Energy Select Sector Index, and short (written) call options on the option eligible securities of companies in the Reference Index that meet, among others, the stock and option price criteria of the Underlying Index methodology.[24]

According to the Registration Statement, the Fund will invest at least 80% of its total assets in the securities that comprise its Underlying Index.

According to the Registration Statement, the Reference Index for the Fund is a rules-based, modified market capitalization weighted index that is designed to track the movements of public companies that are components of the S&P 500 Index and are classified in the GICS® sector, Energy. A modified market capitalization weighted index first weights each index component according to its market capitalization, using the number of shares that are readily available for purchase on the open market, then imposes limits on the weight of individual index components and redistributes any excess weight across the remaining index components. Energy companies in this sector primarily develop and produce crude oil and natural gas, and provide drilling and other energy-related services.

According to the Registration Statement, the Underlying Index for the Fund measures the performance of a hypothetical portfolio that employs a covered call strategy. It consists of long positions in companies in the Reference Index and out-of-the-money call options [25] that are written (sold) systematically on the option eligible securities of companies in the Reference Index that meet, among others, the stock and option price criteria of the Underlying Index methodology.

According to the Registration Statement, the Fund will be an index fund that employs a ''passive management'' investment strategy in seeking to achieve its objective. According to the Registration Statement, the Adviser's strategy will consist of holding an equity portfolio indexed to the Reference Index and writing (selling) covered call options on these equity securities, which options will be indexed to the Underlying Index, generally one standard deviation ''out-of-the-money.'' [26] Options are written systematically ''out-of-the-money'' in accordance with the index methodology based on the prevailing individual level of volatility for each of the equity securities. The Underlying Index provides a benchmark measure of the total return of this hypothetical portfolio.

According to the Registration Statement, because a covered call strategy generates income in the form of premiums on the written options, the Underlying Index is generally expected to provide higher total returns with lower volatility than the Reference Index in most market environments, with the exception of when the equity market is rallying rapidly. The options in the Underlying Index will be traded on national securities exchanges. As of August 31, 2012, the Reference Index and Underlying Index included common stocks of 45 companies, of which all 45 are option eligible, with a market capitalization range of between approximately $1 billion and $276 billion. As of that date, the Underlying Index also included short (written) call options on 42 option eligible securities of the Reference Index, representing 0.6% of the total weight [27] of the Underlying Index.

According to the Registration Statement, the Fund generally will use a replication methodology, meaning it will invest in all of the securities comprising the Underlying Index in proportion to the weightings in the Underlying Index. However, the Fund may from time to time utilize a sampling methodology under various circumstances where it may not be possible or practicable to purchase all of the equity securities and write (sell) all of the call options comprising the Underlying Index.

According to the Registration Statement, the Fund will concentrate its investments (*i.e.,* hold 25% or more of its total assets) in a particular industry or group of industries to approximately the same extent that the Underlying Index is so concentrated. The Fund will be non-diversified under the 1940 Act and, therefore, may invest a greater percentage of its assets in a particular issue in comparison to a ''diversified'' fund.[28] Moreover, according to the Registration Statement, in pursuing its objective, the Fund may hold the securities of a single issuer in an amount exceeding 10% of the outstanding voting securities of the issuer, subject to restrictions imposed by the Code.

Investment Guidelines

According to the Registration Statement, each Fund will write (sell) call options on the option eligible securities of companies in its Reference Index to the same extent as such short call options are included in its Underlying Index.

According to the Registration Statement, the Funds will utilize options in accordance with Rule 4.5 of the Commodity Exchange Act (''CEA''). The Trust, on behalf of the Funds, has filed a notice of eligibility for exclusion from the definition of the term ''commodity pool operator'' in accordance with Rule 4.5 so that the Funds are not subject to registration or regulation as a commodity pool operator under the CEA.

Other Investments

According to the Registration Statement, each Fund may invest in short-term instruments, including money market instruments, on an ongoing basis to provide liquidity for cash equitization, funding, or under abnormal market conditions. Money market instruments are generally short-term investments that may include but are not limited to: (i) Shares of money market funds; (ii) obligations issued or guaranteed by the U.S. government, its agencies or instrumentalities (including government-sponsored enterprises); (iii) negotiable certificates of deposit, bankers' acceptances, fixed time deposits, and other obligations of U.S. and foreign banks (including foreign branches) and similar institutions; (iv) commercial paper rated at the date of purchase ''Prime-1'' by Moody's or ''A–1'' by S&P, or if unrated, of comparable quality as determined by the Sub-Adviser; (v) non-convertible corporate debt securities (*e.g.,* bonds and debentures) with remaining maturities at the date of purchase of not more than 397 days and that satisfy the rating requirements set forth in Rule 2a–7

[23] *See* note 11, *supra.*

[24] *See* note 8, *supra.*

[25] *See* note 13, *supra.*

[26] *See* note 14, *supra.*

[27] *See* note 15, *supra.*

[28] *See* note 16, *supra.*

under the 1940 Act; and (vi) short-term U.S. dollar-denominated obligations of foreign banks (including U.S. branches) that, in the opinion of the Sub-Adviser, are of comparable quality to obligations of U.S. banks which may be purchased by a Fund. Any of these instruments may be purchased on a current or a forward-settled basis.

Each Fund may invest in the securities of other investment companies, subject to applicable limitations under Section 12(d)(1) of the 1940 Act.

A Fund may hold up to an aggregate amount of 15% of its net assets in illiquid securities (calculated at the time of investment), including Rule 144A Securities.[29] The Funds will monitor their portfolio liquidity on an ongoing basis to determine whether, in the light of current circumstances, an adequate level of liquidity is being maintained, and will consider taking appropriate steps in order to maintain adequate liquidity if, through a change in values, net assets, or other circumstances, more than 15% of a Fund's net assets are held in illiquid securities and other illiquid assets.

Each Fund will seek to qualify for treatment as a regulated investment company (''RIC'') under the Code.[30]

The Exchange represents that, for initial and/or continued listing, each Fund will be in compliance with Rule 10A–3 under the Exchange Act,[31] as provided by NYSE Arca Equities Rule 5.3. A minimum of 100,000 Shares for each Fund will be outstanding at the commencement of trading on the Exchange. The Exchange will obtain a representation from the issuer of the Shares that the net asset value (''NAV'') per Share will be calculated daily and will be made available to all market participants at the same time.

Creations and Redemptions

Each Fund will offer and issue Shares on a continuous basis at their NAV only in aggregations of a specified number of Shares (each, a ''Creation Unit''). A Creation Unit of each Fund will consist of at least 50,000 Shares. A Creation Unit of a Fund will be issued and redeemed for securities in which the Fund invests, cash, or both securities and cash.

The consideration for purchase of a Creation Unit of a Fund will generally consist of the in-kind deposit of a designated portfolio of securities (''Deposit Securities'') per each Creation Unit, constituting a substantial replication, or a portfolio sampling representation, of the securities included in the relevant Fund's Underlying Index, together with the deposit of a specified cash payment (''Cash Component''). Notwithstanding the foregoing, the Trust reserves the right to permit or require the substitution of a ''cash in lieu'' amount (''Deposit Cash'') to be added to the Cash Component to replace any Deposit Security.

Together, the Deposit Securities or Deposit Cash, as applicable, and the Cash Component constitute the ''Fund Deposit,'' which represents the initial investment amount for the Creation Unit of the relevant Fund. The ''Cash Component'' is an amount equal to the difference between the NAV of the Shares (per Creation Unit) and the market value of the Deposit Securities or Deposit Cash, as applicable.

Each Fund, through the National Securities Clearing Corporation (''NSCC''), will make available on each business day, immediately prior to the opening of business on the Exchange (currently 9:30 a.m., Eastern time (''E.T.'')), the list of the names and the required number of shares of each Deposit Security or the required amount of Deposit Cash, as applicable, to be included in the current Fund Deposit (based on information at the end of the previous business day) for the relevant Fund.

Shares may be redeemed only in Creation Units at their NAV next determined after receipt of a redemption request in proper form by a Fund through the Transfer Agent and only on a business day. Except upon liquidation of a Fund, the Trust will not redeem Shares in amounts less than Creation Units. With respect to each Fund, the Custodian, through the NSCC, will make available immediately prior to the opening of business on the Exchange (currently 9:30 a.m., E.T.) on each business day, the list of the names and share quantities of each Fund's portfolio securities (''Fund Securities'') and any possible Cash Component, that will be applicable (subject to possible amendment or correction) to redemption requests received in proper form on that day.

Although the Trust will not ordinarily permit partial or full cash purchases of Creation Units of the Funds, when partial or full cash purchases of Creation Units are available or specified for a Fund, they will be effected in essentially the same manner as in-kind purchases thereof. In the case of a partial or full cash purchase, the authorized participant must pay the cash equivalent of the Deposit Securities it would otherwise be required to provide through an in-kind purchase, plus the same Cash Component required to be paid by an in-kind purchaser.

The consideration for redemption of a Creation Unit of a Fund will generally consist of Deposit Securities together with a Cash Component. Notwithstanding the foregoing, the Trust reserves the right to permit or require the substitution Deposit Cash to be added to the Cash Component to replace any Deposit Security.

All orders to purchase or redeem Shares directly from a Fund must be placed for one or more Creation Units by 4:00 p.m., E.T. in the manner set forth in the relevant participant agreement and/or applicable order form. The order shall be deemed to be received on the business day on which the order is placed provided that, among other things, the order is placed in proper form prior to the applicable cut-off time.

Although the Trust will not ordinarily permit partial or full cash redemptions of Creation Units of the Funds, when partial or full cash redemptions of Creation Units are available or specified for a Fund, they will be effected in essentially the same manner as in-kind redemptions thereof. In the case of partial or full cash redemption, the authorized participant will receive the cash equivalent of the Fund Securities it would otherwise receive through an in-kind redemption, plus the same Cash Amount to be paid to an in-kind redeemer.

Availability of Information

The Adviser's Web site (*www.exchangetradedconcepts.com*), which will be publicly available prior to the public offering of Shares, will include a form of the prospectus for the Funds that may be downloaded. The Adviser's Web site will include

[29] The Commission has stated that long-standing Commission guidelines have required open-end funds to hold no more than 15% of their net assets in illiquid securities and other illiquid assets. *See* Investment Company Act Release No. 8901 (March 11, 2008), 73 FR 14618 (March 18, 2008), footnote 34. *See also* Investment Company Act Release No. 5847 (October 21, 1969), 35 FR 19989 (December 31, 1970) (Statement Regarding ''Restricted Securities''); Investment Company Act Release No. 18612 (March 12, 1992), 57 FR 9828 (March 20, 1992) (Revisions of Guidelines to Form N–1A). A fund's portfolio security is illiquid if it cannot be disposed of in the ordinary course of business within seven days at approximately the value ascribed to it by the exchange traded fund (''ETF''). *See* Investment Company Act Release No. 14983 (March 12, 1986), 51 FR 9773 (March 21, 1986) (adopting amendments to Rule 2a–7 under the 1940 Act); Investment Company Act Release No. 17452 (April 23, 1990), 55 FR 17933 (April 30, 1990) (adopting Rule 144A under the Securities Act of 1933).

[30] 26 U.S.C. 851.

[31] 17 CFR 240.10A–3.

additional quantitative information updated on a daily basis, including, for each Fund, (1) daily trading volume, the prior business day's reported closing price, NAV and mid-point of the bid/ask spread at the time of calculation of such NAV (''Bid/Ask Price''),[32] and a calculation of the premium and discount of the Bid/Ask Price against the NAV, and (2) data in chart format displaying the frequency distribution of discounts and premiums of the daily Bid/Ask Price against the NAV, within appropriate ranges, for each of the four previous calendar quarters.

On each business day, before commencement of trading in Shares in the Core Trading Session on the Exchange, each Fund will disclose on *www.exchangetradedconcepts.com* the portfolio of securities and financial instruments that will form the basis for the Fund's calculation of NAV at the end of the business day.[33]

On a daily basis, each Fund will disclose on *www.exchangetradedconcepts.com* for each portfolio security and other financial instrument of the Fund the following information: ticker symbol (if applicable), name of securities and financial instruments, number of shares or dollar value of securities and financial instruments held in the portfolio, and percentage weighting of the securities and financial instruments in the portfolio. The Web site information will be publicly available at no charge. In addition, price information for the investments held by each Fund will be available through major market data vendors and/or the securities exchange on which they are listed and traded.

In addition, a basket composition file for each Fund, which includes the security names and share quantities required to be delivered in exchange for that Fund's Shares, together with estimates and actual cash components, will be publicly disseminated daily prior to the opening of the New York Stock Exchange (''NYSE'') via NSCC. The basket will represent one Creation Unit of the relevant Fund.

In addition, an indicative optimized portfolio value (''IOPV'') for the Shares will be widely disseminated at least every 15 seconds during the Core Trading Session (9:30 a.m. to 4:00 p.m., E.T.) by one or more major market data vendors.[34] The IOPV should not be viewed as a ''real-time'' update of the NAV per Share of the Funds because the IOPV may not be calculated in the same manner as the NAV, which is computed once a day, generally at the end of the business day.

In addition, the value of each Underlying Index will be widely disseminated at least every 15 seconds during the Core Trading Session by one or more major market data vendors. Information regarding the Reference Index and Underlying Index components will be available at *www.standardandpoors.com/indices*. Additional Information regarding the Underlying and Reference Indices' components and their percentage weights will be available from the Index Provider and major market data vendors. Information for each of the Underlying Indices will be available in the same form and through the same methods as the Index Provider's published indices.

Investors can also obtain the Trust's Statement of Additional Information (''SAI''), the Funds' Shareholder Reports, and the Trust's Form N–CSR and Form N–SAR, filed twice a year. The Trust's SAI and Shareholder Reports will be available free upon request from the Trust, and those documents and the Form N–CSR and Form N–SAR may be viewed on-screen or downloaded from the Commission's Web site at *www.sec.gov*. Information regarding market price and trading volume of the Shares will be continually available on a real-time basis throughout the day on brokers' computer screens and other electronic services. Information regarding the previous day's closing price and trading volume information for the Shares will be published daily in the financial section of newspapers. Quotation and last-sale information for the Shares will be available via the CTA high-speed line and, for the securities held by the Funds, will be available from the exchange on which they are listed. The intra-day, closing, and settlement prices of the portfolio securities will also be readily available from the securities exchanges trading such securities, automated quotation systems, published or other public sources, or on-line information services such as Bloomberg or Reuters.

The Exchange represents that the continued listing standards under NYSE Arca Equities Rules 5.2(j)(3) and 5.5(g)(2) applicable to Units shall apply to the Shares. In addition, the Exchange represents that the Funds and the Shares will comply with all other requirements applicable to Units including, but not limited to, requirements relating to the dissemination of key information such as the value of the Underlying Indices, IOPV, and NAV, rules governing the trading of equity securities, trading hours, trading halts, surveillance, information barriers and Information Bulletin to Equity Trading Permit Holders (''ETP Holders'') (each as described in more detail herein), as set forth in Exchange rules applicable to Units and prior Commission orders approving the generic listing rules applicable to the listing and trading of Units.[35]

Each Fund's NAV will be determined as of the close of trading (normally 4:00 p.m., E.T.) on each day the NYSE is open for business. NAV per Share for the Funds will be computed by dividing the value of the net assets of a Fund (*i.e.,* the value of its total assets less total liabilities) by the total number of Shares outstanding, rounded to the nearest cent.[36] Expenses and fees, including the management fees, will be accrued daily and taken into account for purposes of determining NAV. The NAV of each Fund will be calculated by the Administrator and determined at the close of the regular trading session on the NYSE (ordinarily 4:00 p.m., E.T.) on each day that such exchange is open.

Additional information regarding the Trust and the Shares, including investment strategies, risks, creation and redemption procedures, fees, portfolio holdings disclosure policies, distributions, and taxes is included in the Registration Statement. All terms

[32] The Bid/Ask Price of each Fund will be determined using the midpoint of the highest bid and the lowest offer on the Exchange as of the time of calculation of such Fund's NAV. The records relating to Bid/Ask Prices will be retained by the Funds and their service providers.

[33] Under accounting procedures followed by each Fund, trades made on the prior business day (''T'') will be booked and reflected in NAV on the current business day (''T+1''). Accordingly, each Fund will be able to disclose at the beginning of the business day the portfolio that will form the basis for the NAV calculation at the end of the business day.

[34] Currently, it is the Exchange's understanding that several major market data vendors widely disseminate IOPVs taken from the Consolidated Tape Association (''CTA'') or other data feeds.

[35] *See, e.g.,* Securities Exchange Act Release No. 44551 (July 12, 2001), 66 FR 37716 (July 19, 2001) (SR–PCX–2001–14) (order approving generic listing standards for Units and Portfolio Depositary Receipts); Securities Exchange Act Release No. 41983 (October 6, 1999), 64 FR 56008 (October 15, 1999) (SR–PCX–98–29) (order approving rules for listing and trading of Units).

[36] When determining NAV, the value of each Fund's portfolio securities will be based on market prices of the securities or, if a security's market price is not readily available or does not otherwise accurately reflect the fair value of the security, the security will be valued by another method that the Board of Trustees believes will better reflect fair value in accordance with the Trust's valuation policies and procedures. For more information regarding the valuation of Fund investments in calculating the Funds' NAV, see the Registration Statement.

relating to the Funds that are referred to, but not defined in, this proposed rule change are defined in the Registration Statement.

Trading Halts

With respect to trading halts, the Exchange may consider all relevant factors in exercising its discretion to halt or suspend trading in the Shares of a Fund.[37] If the IOPV or the relevant Underlying Index value is not being disseminated as required, the Corporation may halt trading during the day in which the interruption to the dissemination of the applicable IOPV or Underlying Index value occurs. If the interruption to the dissemination of the applicable IOPV or Underlying Index value persists past the trading day in which it occurred, the Corporation will halt trading. Trading in Shares of a Fund will be halted if the circuit breaker parameters in NYSE Arca Equities Rule 7.12 have been reached. Trading also may be halted because of market conditions or for reasons that, in the view of the Exchange, make trading in the Shares inadvisable. These may include: (1) The extent to which trading is not occurring in the securities and/or the financial instruments comprising the relevant Fund's portfolio; or (2) whether other unusual conditions or circumstances detrimental to the maintenance of a fair and orderly market are present. In addition, if the Exchange becomes aware that the NAV is not being disseminated to all market participants at the same time, it will halt trading in the Shares of such Fund on the Exchange until such time as the NAV is available to all market participants.

Trading Rules

The Exchange deems the Shares to be equity securities, thus rendering trading in the Shares subject to the Exchange's existing rules governing the trading of equity securities. Shares will trade on the NYSE Arca Marketplace from 4:00 a.m. to 8:00 p.m., E.T. in accordance with NYSE Arca Equities Rule 7.34 (Opening, Core, and Late Trading Sessions). The Exchange has appropriate rules to facilitate transactions in the Shares during all trading sessions. As provided in NYSE Arca Equities Rule 7.6, Commentary .03, the minimum price variation (''MPV'') for quoting and entry of orders in equity securities traded on the NYSE Arca Marketplace is $0.01, with the exception of securities that are priced less than $1.00 for which the MPV for order entry is $0.0001.

Surveillance

The Exchange intends to utilize its existing surveillance procedures applicable to derivative products (which include Investment Company Units) to monitor trading in the Shares. The Exchange represents that these procedures are adequate to properly monitor Exchange trading of the Shares in all trading sessions and to deter and detect violations of Exchange rules and applicable federal securities laws.

The Exchange's current trading surveillance focuses on detecting securities trading outside their normal patterns. When such situations are detected, surveillance analysis follows and investigations are opened, where appropriate, to review the behavior of all relevant parties for all relevant trading violations.

The Exchange may obtain information via the Intermarket Surveillance Group (''ISG'') from other exchanges that are members of ISG or with which the Exchange has in place a comprehensive surveillance sharing agreement.[38] The equity securities and options in which the Funds will invest and which comprise the Underlying Indices will trade in markets that are ISG members.

In addition, the Exchange also has a general policy prohibiting the distribution of material, non-public information by its employees.

Information Bulletin

Prior to the commencement of trading, the Exchange will inform its ETP Holders in an Information Bulletin (''Bulletin'') of the special characteristics and risks associated with trading the Shares. Specifically, the Bulletin will discuss the following: (1) The procedures for purchases and redemptions of Shares in Creation Unit aggregations (and that Shares are not individually redeemable); (2) NYSE Arca Equities Rule 9.2(a), which imposes a duty of due diligence on its ETP Holders to learn the essential facts relating to every customer prior to trading the Shares; (3) the risks involved in trading the Shares during the Opening and Late Trading Sessions when an updated IOPV will not be calculated or publicly disseminated; (4) how information regarding the IOPV is disseminated; (5) the requirement that ETP Holders deliver a prospectus to investors purchasing newly issued Shares prior to or concurrently with the confirmation of a transaction; and (6) trading information.

In addition, the Bulletin will reference that the Funds are subject to various fees and expenses described in the Registration Statement. The Bulletin will discuss any exemptive, no-action, and interpretive relief granted by the Commission from any rules under the Exchange Act. The Bulletin will also disclose that the NAV for the Shares will be calculated after 4:00 p.m., E.T. each trading day.

2. Statutory Basis

The basis under the Exchange Act for this proposed rule change is the requirement under Section 6(b)(5)[39] that an exchange have rules that are designed to prevent fraudulent and manipulative acts and practices, to promote just and equitable principles of trade, to remove impediments to, and perfect the mechanism of a free and open market and, in general, to protect investors and the public interest.

The Exchange believes that the proposed rule change is designed to prevent fraudulent and manipulative acts and practices in that the Shares will be listed and traded on the Exchange pursuant to the initial and continued listing criteria in NYSE Arca Equities Rule 5.2(j)(3). The Exchange has in place surveillance procedures that are adequate to properly monitor trading in the Shares in all trading sessions and to deter and detect violations of Exchange rules and applicable federal securities laws. The Adviser is affiliated with a broker-dealer and has implemented a fire wall with respect to its broker-dealer affiliate regarding access to information concerning the portfolio holdings of the Funds. The Sub-Adviser is affiliated with a broker-dealer dealer and has implemented a fire wall with respect to its broker dealer affiliate regarding access to information concerning the portfolio holdings of the Funds. In the event (a) the Adviser or Sub-Adviser becomes newly affiliated with a broker-dealer, or (b) any new adviser or sub-adviser becomes affiliated with a broker-dealer, it will implement a fire wall with respect to such broker-dealer regarding access to information concerning the portfolio holdings of the Funds, and will be subject to procedures designed to prevent the use and dissemination of material non-public information regarding such portfolios. The Index Provider is not a broker-dealer and is not affiliated with a broker-dealer and has implemented procedures designed to prevent the use and dissemination of

[37] *See* NYSE Arca Equities Rule 7.12, Commentary .04.

[38] For a list of the current members of ISG, see *www.isgportal.org.*

[39] 15 U.S.C. 78f(b)(5).

material, non-public information regarding the Underlying Indices. All securities in the Reference Indices are listed and traded on a U.S. national securities exchange. The options on the option eligible securities of companies in the Reference Indices are traded on a U.S. national options exchange. The Reference Indices' stocks are among the most actively traded, highly capitalized stocks traded in the U.S. The market value of the call options will not represent more than 10% of the total weight of each Underlying Index.

The proposed rule change is designed to promote just and equitable principles of trade and to protect investors and the public interest in that the Exchange will obtain a representation from the issuer of the Shares that the NAV per Share will be calculated daily and that the NAV will be made available to all market participants at the same time. In addition, a large amount of information is publicly available regarding the Funds and the Shares, thereby promoting market transparency. Moreover, for each Fund, the IOPV and the Underlying Index value will be widely disseminated by one or more major market data vendors at least every 15 seconds during the Exchange's Core Trading Session. If the IOPV or the Underlying Index value of a Fund is not being disseminated as required, the Corporation may halt trading during the day in which the interruption to the dissemination of the applicable IOPV or Underlying Index value occurs. If the interruption to the dissemination of the applicable IOPV or Underlying Index value persists past the trading day in which it occurred, the Corporation will halt trading. In addition, if the Exchange becomes aware that the NAV of a Fund is not being disseminated to all market participants at the same time, it will halt trading in the relevant Shares on the Exchange until such time as the NAV is available to all market participants. On each business day, before commencement of trading in Shares in the Core Trading Session on the Exchange, the Funds will disclose on their Web site the securities and other financial instruments in each Fund's portfolio that will form the basis for the Funds' calculation of NAV at the end of the business day. Information regarding market price and trading volume of the Shares will be continually available on a real-time basis throughout the day on brokers' computer screens and other electronic services, and quotation and last-sale information will be available via the CTA high-speed line. The Web site for the Funds will include a form of the prospectus for the Funds and additional data relating to NAV and other applicable quantitative information. Moreover, prior to the commencement of trading, the Exchange will inform its ETP Holders in an Information Bulletin of the special characteristics and risks associated with trading the Shares. Trading in Shares of the Funds will be halted if the circuit breaker parameters in NYSE Arca Equities Rule 7.12 have been reached or because of market conditions or for reasons that, in the view of the Exchange, make trading in the Shares inadvisable. In addition, the equity securities and options in which the Funds will invest and which comprise the Underlying Indices will trade in markets that are ISG members. Additional Information regarding the Underlying and Reference Indices' components and their percentage weights will be available from the Index Provider and major market data vendors. In addition, quotation and last sale information for the components of the Underlying and Reference Indices will be available from the exchanges on which they trade. The intra-day, closing, and settlement prices of the portfolio securities will also be readily available from the securities exchanges trading such securities, automated quotation systems, published or other public sources, or on-line information services such as Bloomberg or Reuters. In addition, as noted above, investors will have ready access to information regarding the Funds' holdings, the IOPV, Underlying Indices value, and quotation and last-sale information for the Shares.

The proposed rule change is designed to perfect the mechanism of a free and open market and, in general, to protect investors and the public interest in that it will facilitate the listing and trading of additional types of Units that will enhance competition among market participants, to the benefit of investors and the marketplace. As noted above, the Exchange has in place surveillance procedures relating to trading in the Shares and may obtain information via ISG from other exchanges that are members of ISG or with which the Exchange has entered into a comprehensive surveillance sharing agreement. In addition, as noted above, investors will have ready access to information regarding each Fund's holdings, the IOPV, relevant Underlying Index value, and quotation and last-sale information for the Shares.

B. Self-Regulatory Organization's Statement on Burden on Competition

The Exchange does not believe that the proposed rule change will impose any burden on competition that is not necessary or appropriate in furtherance of the purposes of the Act.

C. Self-Regulatory Organization's Statement on Comments on the Proposed Rule Change Received From Members, Participants, or Others

No written comments were solicited or received with respect to the proposed rule change.

III. Date of Effectiveness of the Proposed Rule Change and Timing for Commission Action

Within 45 days of the date of publication of this notice in the **Federal Register** or within such longer period (i) as the Commission may designate up to 90 days of such date if it finds such longer period to be appropriate and publishes its reasons for so finding or (ii) as to which the Exchange consents, the Commission will:

(A) By order approve or disapprove the proposed rule change, or

(B) Institute proceedings to determine whether the proposed rule change should be disapproved.

IV. Solicitation of Comments

Interested persons are invited to submit written data, views, and arguments concerning the foregoing, including whether the proposed rule change is consistent with the Act. Comments may be submitted by any of the following methods:

Electronic Comments

- Use the Commission's Internet comment form (*http://www.sec.gov/rules/sro.shtml*); or
- Send an email to *rule-comments@sec.gov.* Please include File Number SR–NYSEArca–2012–131 on the subject line.

Paper Comments

- Send paper comments in triplicate to Elizabeth M. Murphy, Secretary, Securities and Exchange Commission, 100 F Street NE., Washington, DC 20549–1090.

All submissions should refer to File Number SR–NYSEArca–2012–131. This file number should be included on the subject line if email is used. To help the Commission process and review your comments more efficiently, please use only one method. The Commission will post all comments on the Commission's Internet Web site (*http://www.sec.gov/rules/sro.shtml*). Copies of the submission, all subsequent amendments, all written statements with respect to the proposed rule change that are filed with the Commission, and all written

communications relating to the proposed rule change between the Commission and any person, other than those that may be withheld from the public in accordance with the provisions of 5 U.S.C. 552, will be available for Web site viewing and printing in the Commission's Public Reference Section, 100 F Street NE., Washington, DC 20549–1090, on official business days between 10:00 a.m. and 3:00 p.m. Copies of the filing will also be available for inspection and copying at the NYSE's principal office and on its Internet Web site at *www.nyse.com.* All comments received will be posted without change; the Commission does not edit personal identifying information from submissions. You should submit only information that you wish to make available publicly. All submissions should refer to File Number SR–NYSEArca–2012–131 and should be submitted on or before December 31, 2012.

For the Commission, by the Division of Trading and Markets, pursuant to delegated authority.[40]

Kevin M. O'Neill,

Deputy Secretary.

[FR Doc. 2012–29702 Filed 12–7–12; 8:45 am]

BILLING CODE 8011–01–P

SECURITIES AND EXCHANGE COMMISSION

[Release No. 34–68352; File No. SR–CBOE–2012–113]

Self-Regulatory Organizations; Chicago Board Options Exchange, Incorporated; Notice of Filing and Immediate Effectiveness of a Proposed Rule Change To Amend the CBOE Stock Exchange Fees Schedule

December 4, 2012.

Pursuant to Section 19(b)(1) of the Securities Exchange Act of 1934 (the ''Act''),[1] and Rule 19b–4 thereunder,[2] notice is hereby given that on November 21, 2012, Chicago Board Options Exchange, Incorporated (the ''Exchange'' or ''CBOE'') filed with the Securities and Exchange Commission (the ''Commission'') the proposed rule change as described in Items I, II and III below, which Items have been prepared by the Exchange. The Commission is publishing this notice to solicit comments on the proposed rule change from interested persons.

I. Self-Regulatory Organization's Statement of the Terms of Substance of the Proposed Rule Change

The Exchange proposes to amend the Fees Schedule of its CBOE Stock Exchange (''CBSX''). The text of the proposed rule change is available on the Exchange's Web site (*www.cboe.com/AboutCBOE/CBOELegalRegulatoryHome.aspx*), at the Exchange's Office of the Secretary, and at the Commission.

II. Self-Regulatory Organization's Statement of the Purpose of, and Statutory Basis for, the Proposed Rule Change

In its filing with the Commission, the Exchange included statements concerning the purpose of and basis for the proposed rule change and discussed any comments it received on the proposed rule change. The text of these statements may be examined at the places specified in Item IV below. The Exchange has prepared summaries, set forth in sections A, B, and C below, of the most significant aspects of such statements.

A. Self-Regulatory Organization's Statement of the Purpose of, and Statutory Basis for, the Proposed Rule Change

1. Purpose

The Exchange proposes to amend the CBSX Fees Schedule with regards to connectivity fees. CBSX recently moved its trading systems over to the Equinix NY4 facility (''NY4''). As of December 1, 2012, CBOE will also be moving its trading systems over to NY4. CBOE and CBSX will be retaining some trading systems in Chicago (the ''Disaster Recovery Systems'') in case of the occurrence of some manner of disaster which prevents NY4 from operating. These Disaster Recovery Systems can be accessed via Network Access Ports in Chicago (the ''Disaster Recovery Network Access Ports''). CBSX market participants may maintain Disaster Recovery Network Access Ports in order to be able to connect to the Disaster Recovery Systems in case of such disaster. The fee for a Disaster Recovery Network Access Port will be $250 per month ($500 for Sponsored Users; for connectivity fees, CBSX charges twice the rate for Sponsored Users as for regular access, and therefore merely proposes to apply the same concept to the new Disaster Recovery Network Access Port fees). This amount will allow the Exchange to maintain the Disaster Recovery Network Access Ports in case they become necessary.

CBSX and CBOE can be accessed via the same Network Access Port. In order to prevent market participants accessing both CBOE and CBSX from having to pay two separate Network Access Port fees (one to CBOE and one to CBSX) for using the same Network Access Port, the Exchange proposes to amend the CBSX Fees Schedule to state that any CBSX market participant that accesses both CBOE and CBSX via the same Network Access Port will only be assessed the CBOE Network Access Port fee for that port. This also applies to Disaster Recovery Network Access Ports, meaning that a CBSX market participant that connects to the CBOE and CBSX Disaster Recover Systems via a Disaster Recovery Network Access Port will only need to pay the CBOE Disaster Recovery Network Access Port fee.

The proposed change is to take effect on December 1, 2012.

2. Statutory Basis

The Exchange believes the proposed rule change is consistent with the Act and the rules and regulations thereunder applicable to the Exchange and, in particular, the requirements of Section 6(b) of the Act.[3] Specifically, the Exchange believes the proposed rule change is consistent with Section 6(b)(4) of the Act,[4] which provides that Exchange rules may provide for the equitable allocation of reasonable dues, fees, and other charges among its Trading Permit Holders and other persons using its facilities. The fee for Disaster Recovery Network Access Ports is reasonable because it will allow CBSX to maintain those ports in case of necessity. The fee for Disaster Recovery Network Access Ports is equitable and not unfairly discriminatory because it will be applied equally to all CBSX market participants wishing to maintain a connection to the Disaster Recovery Systems via a Disaster Recovery Network Access Port (except Sponsored Users). Assessing higher fees for Sponsored Users is equitable and not unfairly discriminatory because Sponsored Users are able to access the Exchange and use the equipment provided without possessing a trading permit. As such, CBSX Traders who have a trading permit will have a higher level of commitment to transacting business on CBSX and using Exchange facilities than Sponsored Users. Finally, these differences in the amounts for Sponsored Users and regular users maintain the same proportional

[40] 17 CFR 200.30–3(a)(12).

[1] 15 U.S.C. 78s(b)(1).

[2] 17 CFR 240.19b–4.

[3] 15 U.S.C. 78f(b).

[4] 15 U.S.C. 78f(b)(4).

difference as that for other connectivity fees.

Allowing a CBSX market participant that accesses both CBOE and CBSX via the same Network Access Port to only be assessed the CBOE Network Access Port fee for that port (for Disaster Recovery Network Access Port fees, as well) is reasonable because it allows such CBSX market participants that access both CBOE and CBSX via the same Network Access Port to avoid having to pay two fees for one port. This is equitable and not unfairly discriminatory because there is only one port being accessed, and because it will be applied to all CBSX market participants that access both CBOE and CBSX via the same Network Access Port.

B. Self-Regulatory Organization's Statement on Burden on Competition

CBOE does not believe that the proposed rule change will impose any burden on competition that is not necessary or appropriate in furtherance of the purposes of the Act.

C. Self-Regulatory Organization's Statement on Comments on the Proposed Rule Change Received From Members, Participants, or Others

The Exchange neither solicited nor received comments on the proposed rule change.

III. Date of Effectiveness of the Proposed Rule Change and Timing for Commission Action

The foregoing rule change has become effective pursuant to Section 19(b)(3)(A) [5] of the Act and paragraph (f) of Rule 19b–4 [6] thereunder. At any time within 60 days of the filing of the proposed rule change, the Commission summarily may temporarily suspend such rule change if it appears to the Commission that such action is necessary or appropriate in the public interest, for the protection of investors, or otherwise in furtherance of the purposes of the Act.

IV. Solicitation of Comments

Interested persons are invited to submit written data, views, and arguments concerning the foregoing, including whether the proposed rule change is consistent with the Act. Comments may be submitted by any of the following methods:

Electronic Comments

- Use the Commission's Internet comment form (*http://www.sec.gov/rules/sro.shtml*); or
- Send an email to *rule-comments@sec.gov.* Please include File Number SR–CBOE–2012–113 on the subject line.

Paper Comments

- Send paper comments in triplicate to Elizabeth M. Murphy, Secretary, Securities and Exchange Commission, 100 F Street NE., Washington, DC 20549–1090.

All submissions should refer to File Number SR–CBOE–2012–113. This file number should be included on the subject line if email is used. To help the Commission process and review your comments more efficiently, please use only one method. The Commission will post all comments on the Commission's Internet Web site (*http://www.sec.gov/rules/sro.shtml*). Copies of the submission, all subsequent amendments, all written statements with respect to the proposed rule change that are filed with the Commission, and all written communications relating to the proposed rule change between the Commission and any person, other than those that may be withheld from the public in accordance with the provisions of 5 U.S.C. 552, will be available for Web site viewing and printing in the Commission's Public Reference Room, 100 F Street NE., Washington, DC 20549, on official business days between the hours of 10:00 a.m. and 3:00 p.m. Copies of the filing also will be available for inspection and copying at the principal office of the Exchange. All comments received will be posted without change; the Commission does not edit personal identifying information from submissions. You should submit only information that you wish to make available publicly. All submissions should refer to File Number SR–CBOE–2012–113 and should be submitted on or before December 31, 2012.

For the Commission, by the Division of Trading and Markets, pursuant to delegated authority.[7]

Kevin M. O'Neill,

Deputy Secretary.

[FR Doc. 2012–29745 Filed 12–7–12; 8:45 am]

BILLING CODE 8011–01–P

[5] 15 U.S.C. 78s(b)(3)(A).

[6] 17 CFR 240.19b–4(f).

[7] 17 CFR 200.30–3(a)(12).

SECURITIES AND EXCHANGE COMMISSION

[File No. 500–1]

Emerging World Pharma, Inc.; Order of Suspension of Trading

December 6, 2012.

It appears to the Securities and Exchange Commission that there is a lack of current and accurate information concerning the securities of Emerging World Pharma, Inc. (''Emerging World''). Emerging World is a Florida corporation purportedly based in Manassas, Virginia and Sunyani, Ghana, and its stock is currently quoted on OTC Link, operated by OTC Markets Group, Inc. under the symbol EWPI. Questions have arisen concerning the adequacy and accuracy of press releases and other public statements concerning Emerging World's business operations and financial condition.

The Commission is of the opinion that the public interest and the protection of investors require a suspension of trading in the securities of Emerging World.

Therefore, it is ordered, pursuant to Section 12(k) of the Securities Exchange Act of 1934, that trading in the securities of the above-listed company is suspended for the period from 9:30 a.m. EST, on December 6, 2012 through 11:59 p.m. EST, on December 19, 2012.

By the Commission.

Jill M. Peterson,

Assistant Secretary.

[FR Doc. 2012–29841 Filed 12–6–12; 4:15 pm]

BILLING CODE 8011–01–P

SMALL BUSINESS ADMINISTRATION

Data Collection Available for Public Comments and Recommendations

ACTION: 60 Day notice and request for comments. 8(a) Business Development Program.

SUMMARY: In accordance with the Paperwork Reduction Act of 1995, this notice announces the Small Business Administration's (SBA's) intentions to request approval on a new information collection.

DATES: Submit comments on or before February 8, 2013.

ADDRESSES: Send all comments regarding whether or not this information collection is necessary for the proper performance of the function of the agency, whether or not the burden estimates are accurate, and whether or not there are ways to minimize the estimated burden and enhance the quality of the collection, to Joan

Elliston, Program Analyst, Office of Business Development, U.S. Small Business Administration, 409 3rd Street, 8th Floor, Washington, DC 20416.

FOR FURTHER INFORMATION CONTACT: Joan Elliston, Program Analyst, (202) 205–7190, *joan.elliston@sba.gov*; Curtis B. Rich, Management Analyst, (202) 205–7030, *curtis.rich@sba.gov.*

SUPPLEMENTARY INFORMATION: Comments on reporting and recordkeeping requirements that will affect small businesses seeking to maintain 8(a) Business Development (BD) program eligibility. SBA is creating a new form: ''8(a) Participant Benefits Report,'' required by Title 13 of Code of Federal Regulations, Section 124.604. individual 8(a) Participant firm is responsible for completing the form. The 8(a) Participant firm can furnish its own benefits information or can utilize the benefits information offered by its parent corporation. The 8(a) Participant firm must show how the Tribe, ANC, NHO or CDC has provided benefits to the Tribal or native members and/or the Tribal, native or other community due to the Tribe's/ANC's/NHO's/CDC's participation in the 8(a) BD program through one or more firms. This data includes information relating to funding cultural programs, employment assistance, jobs, scholarships, internships, subsistence activities, and other services provided by the Tribe, ANC, NHO or CDC to the affected community.

Title: ''8(a) Participant Benefits Report''.

Description of Respondents: Firms that are currently certified as 8(a) Participant firms in the 8(a) Business Development program and are owned by a Tribe, Alaskan Native Corporation (ANC), Native Hawaiian Organization (NHO) or Community Development and Corporation (CDC).

Form Number: N/A.

Annual Responses: 320.

Annual Burden: 480.

Curtis Rich,

Management Analyst.

[FR Doc. 2012–29729 Filed 12–7–12; 8:45 am]

BILLING CODE 8025–01–P

SMALL BUSINESS ADMINISTRATION

[Disaster Declaration #13400 and #13401]

West Virginia; Disaster #WV–00031

AGENCY: U.S. Small Business Administration.

ACTION: Notice.

SUMMARY: This is a Notice of the Presidential declaration of a major disaster for Public Assistance Only for the State of West Virginia (FEMA–4093–DR), dated 11/27/2012.

Incident: Hurricane Sandy.

Incident Period: 10/29/2012 through 11/08/2012.

Effective Date: 11/27/2012.

Physical Loan Application Deadline Date: 01/28/2013.

Economic Injury (EIDL) Loan Application Deadline Date: 08/27/2013.

ADDRESSES: Submit completed loan applications to: U.S. Small Business Administration, Processing and Disbursement Center, 14925 Kingsport Road, Fort Worth, TX 76155.

FOR FURTHER INFORMATION CONTACT: A. Escobar, Office of Disaster Assistance, U.S. Small Business Administration, 409 3rd Street SW., Suite 6050, Washington, DC 20416.

SUPPLEMENTARY INFORMATION: Notice is hereby given that as a result of the President's major disaster declaration on 11/27/2012, private non-profit organizations that provide essential services of governmental nature may file disaster loan applications at the address listed above or other locally announced locations.

The following areas have been determined to be adversely affected by the disaster:

Primary Counties

Barbour, Boone, Braxton, Clay, Fayette, Kanawha, Lewis, Nicholas, Pendleton, Pocahontas, Preston, Raleigh, Randolph, Taylor, Tucker, Upshur, Webster, Wyoming.

The Interest Rates are:

	Percent
For Physical Damage:	
Non-Profit Organizations with Credit Available Elsewhere ...	3.125
Non-Profit Organizations without Credit Available Elsewhere	3.000
For Economic Injury:	
Non-Profit Organizations without Credit Available Elsewhere	3.000

The number assigned to this disaster for physical damage is 134008 and for economic injury is 34018.

(Catalog of Federal Domestic Assistance Numbers 59002 and 59008)

James E. Rivera,

Associate Administrator for Disaster Assistance.

[FR Doc. 2012–29731 Filed 12–7–12; 8:45 am]

BILLING CODE 8025–01–P

SMALL BUSINESS ADMINISTRATION

[Disaster Declaration #13398 and #13399]

Virginia Disaster #VA–00052

AGENCY: U.S. Small Business Administration.

ACTION: Notice.

SUMMARY: This is a Notice of the Presidential declaration of a major disaster for Public Assistance Only for the State of Virginia (FEMA–4092–DR), dated 11/26/2012.

Incident: Hurricane Sandy

Incident Period: 10/26/2012 through 11/08/2012

EFFECTIVE DATE: 11/26/2012

Physical Loan Application Deadline Date: 01/25/2013

Economic Injury (EIDL) Loan Application Deadline Date: 08/26/2013

ADDRESSES: Submit completed loan applications to: U.S. Small Business Administration, Processing And Disbursement Center, 14925 Kingsport Road, Fort Worth, TX 76155.

FOR FURTHER INFORMATION CONTACT: A. Escobar, Office of Disaster Assistance, U.S. Small Business Administration, 409 3rd Street SW., Suite 6050, Washington, DC 20416.

SUPPLEMENTARY INFORMATION: Notice is hereby given that as a result of the President's major disaster declaration on 11/26/2012, private non-profit organizations that provide essential services of governmental nature may file disaster loan applications at the address listed above or other locally announced locations.

The following areas have been determined to be adversely affected by the disaster:

Primary Counties:

Accomack; Arlington; Clarke; Craig; Culpeper; Essex; Fairfax City; Falls Church City; Fauquier; Frederick; Greene; Highland; King And Queen; Lancaster; Loudoun; Madison; Manassas City; Mathews; Middlesex; Nelson; Northampton; Northumberland; Prince William; Rappahannock; Shenandoah; Surry; Warren; Westmoreland.

The Interest Rates are:

	Percent
For Physical Damage:	
Non-Profit Organizations With Credit Available Elsewhere ...	3.125
Non-Profit Organizations Without Credit Available Elsewhere	3.000
For Economic Injury:	
Non-Profit Organizations Without Credit Available Elsewhere	3.000

The number assigned to this disaster for physical damage is 133988 and for economic injury is 133998.

(Catalog of Federal Domestic Assistance Numbers 59002 and 59008)

James E. Rivera,

Associate Administrator for Disaster Assistance.

[FR Doc. 2012–29732 Filed 12–7–12; 8:45 am]

BILLING CODE 8025–01–P

SMALL BUSINESS ADMINISTRATION

[Disaster Declaration #13402 and #13403]

Alaska Disaster #AK–00027

AGENCY: U.S. Small Business Administration.

ACTION: Notice.

SUMMARY: This is a Notice of the Presidential declaration of a major disaster for Public Assistance Only for the State of Alaska (FEMA–4094–DR), dated 11/27/2012.

Incident: Severe storm, straight-line winds, flooding, and landslides.

Incident Period: 09/15/2012 through 09/30/2012.

Effective Date: 11/27/2012.

Physical Loan Application Deadline Date: 01/28/2013.

Economic Injury (EIDL) Loan Application Deadline Date: 08/27/2013.

ADDRESSES: Submit completed loan applications to: U.S. Small Business Administration, Processing And Disbursement Center, 14925 Kingsport Road, Fort Worth, TX 76155.

FOR FURTHER INFORMATION CONTACT: A. Escobar, Office of Disaster Assistance, U.S. Small Business Administration, 409 3rd Street SW., Suite 6050, Washington, DC 20416.

SUPPLEMENTARY INFORMATION: Notice is hereby given that as a result of the President's major disaster declaration on 11/27/2012, Private Non-Profit organizations that provide essential services of governmental nature may file disaster loan applications at the address listed above or other locally announced locations.

The following areas have been determined to be adversely affected by the disaster:

Primary Counties:

Alaska Gateway REAA; Chugach REAA; Denali Borough; Kenai Peninsula Borough; Matanuska-Susitna Borough.

The Interest Rates are:

	Percent
For Physical Damage:	
Non-Profit Organizations With Credit Available Elsewhere ...	3.125
Non-Profit Organizations Without Credit Available Elsewhere ...	3.000
For Economic Injury:	
Non-Profit Organizations Without Credit Available Elsewhere ...	3.000

The number assigned to this disaster for physical damage is 13402B and for economic injury is 13403B.

(Catalog of Federal Domestic Assistance Numbers 59002 and 59008)

James E. Rivera,

Associate Administrator for Disaster Assistance.

[FR Doc. 2012–29730 Filed 12–7–12; 8:45 am]

BILLING CODE 8025–01–P

DEPARTMENT OF STATE

[Public Notice 8107]

Culturally Significant Objects Imported for Exhibition Determinations: ''Arts of Islamic Lands: Masterpieces From The al-Sabah Collection, Kuwait''

SUMMARY: Notice is hereby given of the following determinations: Pursuant to the authority vested in me by the Act of October 19, 1965 (79 Stat. 985; 22 U.S.C. 2459), Executive Order 12047 of March 27, 1978, the Foreign Affairs Reform and Restructuring Act of 1998 (112 Stat. 2681, *et seq.;* 22 U.S.C. 6501 note, *et seq.*), Delegation of Authority No. 234 of October 1, 1999, and Delegation of Authority No. 236–3 of August 28, 2000 (and, as appropriate, Delegation of Authority No. 257 of April 15, 2003), I hereby determine that the objects to be included in the exhibition ''Arts of Islamic Lands: Masterpieces from The al-Sabah Collection, Kuwait,'' imported from abroad for temporary exhibition within the United States, are of cultural significance. The objects are imported pursuant to loan agreements with the foreign owners or custodians. I also determine that the exhibition or display of the exhibit objects at The Museum of Fine Arts, Houston in Houston, Texas from on or about January 20, 2013, until on or about January 20, 2018, and at possible additional exhibitions or venues yet to be determined, is in the national interest. I have ordered that Public Notice of these Determinations be published in the **Federal Register**.

FOR FURTHER INFORMATION CONTACT: For further information, including a list of the exhibit objects, contact Ona M. Hahs, Attorney-Adviser, Office of the Legal Adviser, U.S. Department of State (telephone: 202–632–6473). The mailing address is U.S. Department of State, SA–5, L/PD, Fifth Floor (Suite 5H03), Washington, DC 20522–0505.

Dated: December 3, 2012.

J. Adam Ereli,

Principal Deputy Assistant Secretary, Bureau of Educational and Cultural Affairs, Department of State.

[FR Doc. 2012–29737 Filed 12–7–12; 8:45 am]

BILLING CODE 4710–05–P

DEPARTMENT OF TRANSPORTATION

Federal Aviation Administration

Clarification of Wildlife Hazard Management Requirements for Non-Certificated Federally Obligated Airports in the National Plan of Integrated Airport Systems (NPIAS)

AGENCY: Federal Aviation Administration (FAA), Department of Transportation (DOT).

ACTION: Notice of proposed clarification of Airport Improvement Program grant assurances and opportunity to comment.

SUMMARY: To enhance safety, the FAA proposes to clarify Grant Assurance No. 19, ''Operation and Maintenance,'' which is required of an airport sponsor as a condition of receiving a development grant under the Airport Improvement Program (AIP). This clarification would require non-certificated, federally obligated airports that, after the effective date of this **Federal Register** Notice, accept a new airport development grant funded under the Airport Improvement Program (AIP), or accept a transfer of land under the Surplus Property Act for airport purposes (''Subject Airports''), to conduct Wildlife Hazard Site Visits (WHSVs) or Wildlife Hazard Assessments (WHAs). Non-certificated airports are airports that do not have a Part 139 certificate, and may include both commercial service airports as well as non-primary airports that serve mostly general aviation traffic. The Secretary of Transportation is required to provide notice and comment in the **Federal Register** and an opportunity for the public to comment upon proposals to modify the assurances or add new assurances.

DATES: Send your comments on or before January 9, 2013. The FAA will consider comments received on the proposed interpretation of the existing grant assurances. The FAA may adopt revisions resulting from comments as of the date of a subsequent Notice in the **Federal Register**.

ADDRESSES: You may send comments [identified by Docket Number FAA–INSERT #] using any of the following methods:

- Government-wide rulemaking Web site: Go to *http://www.regulations.gov* and follow the instructions for sending your comments electronically.
- Mail: Docket Operations, U.S. Department of Transportation, West Building, Ground Floor, Room W12–140, Routing Symbol M–30, 1200 New Jersey Avenue SE., Washington, DC 20590.
- Fax: 1–202–493–2251.
- Hand Delivery: To Docket Operations, Room W12–140 on the ground floor of the West Building, 1200 New Jersey Avenue SE., Washington, DC 20590, between 9 a.m. and 5 p.m., Monday through Friday, except Federal holidays.

Privacy: We will post all comments we receive, without change, to *http://www.regulations.gov*, including any personal information you provide.

Docket: To read background documents or comments received, go to *http://www.regulations.gov* at any time or to Room W12–140 on the ground floor of the West Building, 1200 New Jersey Avenue SE, Washington, DC, between 9 a.m. and 5 p.m., Monday through Friday, except Federal holidays.

FOR FURTHER INFORMATION CONTACT: Michael J. O'Donnell, Director, Office Airport Safety and Standards, Room 621, Federal Aviation Administration, 800 Independence Avenue SW., Washington, DC 20591; telephone: (202) 267–3053, email: *mike.o'donnell@faa.gov*.

SUPPLEMENTARY INFORMATION: The purpose of this notice is to clarify the FAA's interpretation of 49 U.S.C. 47107(a) (19) and the corollary Grant Assurance No. 19, relating to airport operations and maintenance. The FAA proposes to require sponsors of federally obligated, non-certificated airports that, after the effective date of this **Federal Register** Notice, accept a new airport development grant funded under the Airport Improvement Program, or accept a transfer of land under the Surplus Property Act for airport purposes to identify and mitigate wildlife hazards at their airports. These actions will take the form of initial Wildlife Hazard Site Visits (WHSVs) or Wildlife Hazard Assessments (WHAs), depending on the size of the airport, potentially followed by more detailed Wildlife Hazard Management Plans (WHMPs).

The purpose of a WHSV is for the sponsor to identify any immediate hazards and for the FAA to determine whether a more comprehensive WHA is necessary. A WHSV is typically conducted over a period of one to three days. A WHA is a far more comprehensive survey, typically conducted over a 12-month period. WHMP is the plan the airport proposes to mitigate any wildlife hazards found.

The Secretary must receive certain assurances from a sponsor (applicant) seeking financial assistance under title 49 U.S.C. 47107, as amended. Sponsors must submit and attest to these assurances as part of their application for Federal financial assistance, and the FAA incorporates these assurances into all AIP grant agreements. From time to time, as necessary, the FAA clarifies, modifies or supplements these assurances to reflect new requirements deemed reasonably necessary to carry out the Airport Improvement Program. A complete list of the current grant assurances is available at: *http://www.faa.gov/airports/aip/grant_assurances/*. The FAA amended and published the current assurances in the **Federal Register** on April 13, 2012 (see *''Airport Improvement Program (AIP) Grant Assurances,''* 77 FR 22376). The FAA uses a standard set of assurances for Airport Sponsors (owners/operators) called Appendix 1. The FAA is interpreting 49 U.S.C. 47107(a)(19) and the corollary grant assurance, No. 19, relating to airport operation and maintenance, to require airport sponsors to conduct wildlife hazard assessments or site visits and other actions as necessary, as detailed in this notice, to detect and identify wildlife hazards. The clarification relates to Appendix 1, Airport Sponsors assurances.

Grant Assurance No. 19, ''Operation and Maintenance,'' requires a sponsor to operate ''the airport and all facilities which are necessary to serve the aeronautical users of the airport [* * *], in a safe and serviceable condition and in accordance with the minimum standards as may be required or prescribed by applicable Federal, state and local agencies for maintenance and operation.'' Under Assurance No. 19, sponsors are also required to ''have in effect arrangements for [* * *] promptly notifying airmen of any condition affecting aeronautical use of the airport.''

The airports affected by this clarification of Grant Assurance No. 19 (Subject Airports) are non-certificated airports. Non-certificated airports include smaller commercial service airports, as well as non-primary airports that service mostly general aviation (GA) operations. These airports are typically smaller and have less air traffic, more piston-powered aircraft, and smaller jet aircraft, than certificated airports. This notice does not apply to Part 139 certificated airports. All Part 139 certificated airports will continue to follow Part 139 regulations for determining when WHA's are required.

The FAA has divided the Subject Airports into four categories based on based aircraft and total operations. The four categories are:

a. Subject Airports with 100 or more based turbine-powered aircraft or 75,000 or more total annual operations. The WHA must be initiated within three years of receiving a development grant after the final **Federal Register** notice. The airport sponsor must update its WHA at least once every 10 years thereafter.

b. Subject Airports with between 20–99 based turbine-powered aircraft or 30,000–74,999 total annual operations. The WHSV must be initiated within three years of receiving a development grant after the final **Federal Register** notice. The airport sponsor must update its WHSV at least once every five years thereafter.

c. Subject Airports with between 0–19 based turbine-powered aircraft or between 10,000–29,999 total annual operations. The WHSV must be initiated within five years of receiving a development grant after the final **Federal Register** notice. The airport sponsor must update its WHSV at least once every five years thereafter.

d. Subject Airports with no based turbine-powered aircraft and fewer than 10,000 total annual operations. The WHSV must be initiated within eight years of receiving a development grant after the final **Federal Register** notice. The airport sponsor must update its WHSV at least once every five years thereafter.

Data for these categories comes from the FAA Form 5010–1, Airport Master Record database. The FAA classifies airports to fit within the highest applicable category: that is, if an airport's number of based turbine-powered aircraft would place it into one category, while the airport's number of annual operations would place it into a higher category, the FAA classifies the airport to be within the higher category.

When a WHSV is completed, the airport sponsor will provide a letter to the FAA along with the WHSV report. This letter will summarize pertinent wildlife information, any immediate mitigation activities the airport can do to alleviate or reduce wildlife hazards, and a recommendation as to whether a more comprehensive WHA is necessary. The FAA will then determine the need for a comprehensive WHA. Similarly, the FAA will determine if the

conclusions and recommendations within a WHA warrant a WHMP.

The FAA further interprets the statutory and grant assurance obligations to require airport sponsors to update their WHAs every 10 years, and WHSVs at least once every five years thereafter. WHAs are granted a longer time before expiration because they cover a full year and are more comprehensive than WHSVs. WHSVs are one to three days in length, and are not nearly as comprehensive as WHAs. Like other WHAs, sponsors must submit the updated WHAs to the FAA Administrator for approval and determination of the need for a WHMP.

The clarification the FAA proposes represents the FAA's desire to continue to enhance safety and prevent accidents before they occur, and is consistent with its previous safety enhancement efforts. These efforts include rulemaking on the subject of Safety Management Systems (SMS), as well as Cert Alert No. 09–10 ''Wildlife Hazard Assessments in Accordance with Part 139 Requirements'' (June 11, 2009), which the FAA issued to remind Part 139 airport operators of their obligations to conduct Wildlife Hazard Assessments if certain criteria are met. In this Cert Alert, the FAA also recommended that Part 139 airports that had not experienced a triggering event voluntarily conduct a WHA. In addition, the Cert Alert recommended that airports update WHAs more than five years old. The FAA believes sponsors who accept new grants at Subject Airports need to be more proactive in the future and take steps to understand and alleviate the risks of wildlife strikes.

The FAA published Advisory Circular 5200–33B (''Hazardous Wildlife Attractants on or Near Airports'') on August 28, 2007. Paragraph 2 states, ''Airports that have received Federal grant-in-aid assistance must use these standards.'' The word ''standards'' in this section of the AC refers to the separation criteria for proposed land use practices, described in Section 1 of the AC and referenced in Section 4–3 of the AC. The FAA considers the grant assurances to require federally funded airports to adhere to the separation criteria.

The AC also recommends that federally funded airports near woodlands, wetlands, and water prepare wildlife hazard assessments (WHAs). Specifically, Paragraph 2–7 (c) states, ''The FAA recommends that operators of airports surrounded by woodlands, water, or wetlands refer to Section 2.4 of this AC.'' The FAA has not interpreted this statement or the grant assurances to mean that non-certificated airports were required to do WHAs. This interpretation of the AC was reasonable based on the AC's plain language, its history, as well as the requirements for federally funded airports under Part 139, which were less stringent with regard to WHA triggering events.

The FAA is concurrently publishing the draft Advisory Circular, No. 5200–33C, on the FAA's Web site at *http://www.faa.gov/airports/resources/draft_advisory_circulars/* for public comment. To comment on the draft Advisory Circular, follow the instructions on the Web site.

Proposed changes to Advisory Circular 5200–33B include the removal of Section 2.7(c), *''Airports Surrounded by Wildlife Habitat.''* The FAA also proposes to modify the Applicability section to be consistent with the FAA's interpretation of Grant Assurance No. 19. The FAA proposes interpreting the grant assurance to require non-certificated, federally obligated airports that accept a new airport development grant under the Airport Improvement Program (AIP), or a new surplus property conveyance, to monitor, evaluate, and mitigate risks associated with wildlife hazards. The FAA also proposes recommended procedures concerning off-airport attractants (i.e., notification and review of proposed land-use practice changes in the vicinity of public-use airports).

We are also clarifying in this **Federal Register** Notice that we interpret the phrase ''farthest edge of the airport's AOA'' in Para 1–4 of Advisory Circular 150/5200–33 (''Hazardous Wildlife Attractants on or Near Airports'') to refer to the edge of the air operations area (AOA) closest to the wildlife attractant.

This serves as notice pursuant to 49 U.S.C. 47107(h) that the FAA interprets Grant Assurance No. 19 to include a requirement for all Subject Airports to undertake either a Wildlife Hazard Assessment (WHA) or Wildlife Hazard Safety Site Visit (WHSV), and to mitigate wildlife risks according to criteria set forth in this notice. This is done in accordance with the authority of the Secretary of Transportation to take such action that the Secretary considers necessary to carry out the Airport Improvement Program, including grant assurance requirements for sponsors. 49 U.S.C. 47107(g)(1)(A), 47122(a). To comment on this Notice, follow the instructions set forth under **ADDRESSES**, above.

Currently, Grant Assurance No. 19 reads, in part, ''[The sponsor] will suitably operate and maintain the airport and all facilities thereon or connected therewith, with due regard to climatic and flood conditions.'' To clarify, the FAA proposes to add language addressing wildlife hazards to this sentence, so that it would read: ''[The sponsor] will suitably operate and maintain the airport and all facilities thereon or connected therewith, with due regard to issues including, but not limited to, climatic and flood conditions, and wildlife hazards.''

This **Federal Register** Notice does not apply to Part 139 certificated airports. Specific requirements for certificated airports to alleviate wildlife hazards whenever detected are published at 14 CFR 139.337.

Under the Surplus Property Act of 1944, now codified at 49 U.S.C. 47151–47153, Congress authorized the conversion of surplus military airports to civilian public use airports. State or local governments request the Federal Government to convey land that is desirable for developing, improving, operating, or maintaining a public airport. The property is transferred to the new public-entity owner through an instrument of property conveyance. The transfer instrument contains deed covenants similar to the grant assurances, which the FAA enforces through 14 CFR Part 16. One of the deed covenants is a provision substantially similar to Grant Assurance No. 19 (See FAA Order 5150.2A, Appendix 3, paragraph 6(b)). This is to provide notice that the FAA will be interpreting this parallel provision of Grant Assurance No. 19 in a similar manner.

In summary, the FAA proposes to interpret the statutory and grant assurance provisions relating to safety, and the parallel deed covenant included in instruments of conveyance of surplus property, on a prospective basis, to require all Subject Airports to conduct either a WHA or WHSV, and to prepare a WHMP if necessary, upon acceptance of a new grant for a development project, or a new instrument of conveyance for surplus property after the effective date of the final **Federal Register** Notice. The FAA believes this will enhance safety in managing wildlife hazards at general aviation airports.

Additional Information: On March 4, 2008, a catastrophic wildlife strike involving a Cessna 500 Citation and an unknown number of migratory white pelicans resulted in five fatalities near Wiley Post Airport in Oklahoma City, OK. Following the National Transportation Safety Board (NTSB) investigation, the NTSB recommended the FAA ''[v]erify that all federally obligated general aviation airports that are located near woodlands, water,

wetlands, or other wildlife attractants are complying with the requirements to perform wildlife hazard assessments as specified in Federal Aviation Administration Advisory Circular 150/5200–33B, Hazardous Wildlife Attractants On or Near Airports.'' In response, the FAA stated it would:

> [* * *] modify Advisory Circular (AC) 150/5200–33B and our grant assurances to clarify the responsibility of federally obligated National Plan of Integrated Airport System/General Aviation (NPIAS/GA) airports, to conduct wildlife hazard assessments (WHA). To assist the airports in conducting the WHAs, we will make Airport Improvement Program (AIP) grant funds available to them and we will prepare a plan to establish the priority and subsequent schedule for completing the WHAs * * *

Many populations of wildlife species commonly involved in aircraft strikes in the United States have increased markedly in number in the last few decades. For example, from 1980 to 2009, the resident (non-migratory) Canada goose population in the USA and Canada increased at a mean rate of 13.3 percent per year. Other species showing significant mean annual rates of increase included bald eagles (3.6 percent), wild turkeys (11.1 percent), turkey vultures (2.6 percent), American white pelicans (8.4 percent), double-crested cormorants (6.6 percent), and sandhill cranes (6.4 percent). Thirteen of the 14 bird species in North America with mean body masses greater than 8 lbs. have shown significant population increases over the past three decades. The white-tailed deer population increased from about 15 million in 1984 and to over 28 million in 2010.

In May 2009, the FAA authorized a study through the FAA Airport Technology Research and Development Branch to review the National Wildlife Strike Database and determine the current level of reporting and if it is sufficient to determine national trends. The two parts of this study, *''Trends in Wildlife Strike Reporting, Part 1—Voluntary System 1990–2008,''* DOT/FAA/AR–09/65 (December 2009) and *''Wildlife Strike Reporting—Sources of Data in Voluntary System,''* DOT/FAA/AR–09/63 (December 2009), also reviewed whether strike reporting should be mandated and how the FAA can increase its data collection.

This study identified an increase in the total number of strikes reported from 20 percent of all strikes occurring from 1990 to 1994 to 39 percent of all strikes occurring from 2004 to 2008 at airports certificated under 14 Code of Federal Regulations (CFR) Part 139. Although there was a higher level of reporting, the total number of damaging strikes did not increase. The study attributes this to the successful implementation of professionally run wildlife hazard programs to mitigate significant wildlife hazards at many certificated airports (See *Trends in Wildlife Strike Reporting,* section 6).

The study did identify substantial reporting gaps in the reporting of bird strikes among certificated airports, air carriers, and GA airports. The report addressed GA airports listed in the NPIAS (and therefore eligible to receive grants of federal funding) separately from other GA airports. Less than 6 percent of all strike reports come from NPIAS GA airports, and reporting rates average less than 1/20 of the rates at Part 139 airports.

Although the current overall reporting rate of 39 percent is adequate to: (1) Track national trends in wildlife strikes; (2) determine the hazard level of wildlife species that are being struck; and (3) provide a scientific foundation for FAA policies and guidance regarding the mitigation of risk from wildlife strikes, the study concluded that NPIAS GA airport strike reporting is underrepresented (see *''Trends in Wildlife Strike Reporting,''* section 5.2).[1] Whereas about 11 percent of the strikes reported from Part 139 airports indicated damage to the aircraft, about 50 percent of the strikes reported from NPIAS GA airports indicated damage. Thus, even though NPIAS GA airports report fewer total damaging strikes compared to Part 139 airports, such strikes constitute a much higher percentage of their total reporting. This raises the concern that non-damaging strikes are occurring at these airports but going unreported.

Increased monitoring of general conditions and reporting of even non-damaging strikes by GA airports is important because it allows for identification of potential and minor hazards before they become major hazards, which in turn allows airports to prevent damaging strikes before they occur.

Turning to strike rates for GA aircraft at Part 139 compared to NPIAS GA airports, the reported strike rate for GA aircraft at Part 139 airports was nine times higher than the reported strike rate for GA aircraft at NPIAS GA airports. ''GA aircraft'' is defined in the study as non-commercial private, business, or government aircraft—see *''Trends in Wildlife Strike Reporting,''* section 4.3.3. However, the damaging strike rate for GA aircraft at Part 139 airports was three times higher than it was for GA aircraft at NPIAS GA airports. It is notable that of the 49 reported civil aircraft destroyed or damaged beyond repair because of wildlife strikes in the U.S. from 1990–2008, 33 (67 percent) occurred on or near GA airports.

According to the study, the number of Part 139 airports reporting at least one wildlife strike increased from 234 (42 percent of the 552 airports) in 1990 to 333 (60 percent) in 2008. The overall reported strike rates at individual Part 139 airports were 15 to 47 times higher compared to NPIAS non-certificated airports in each year (1990–2009). The average strike rate of all Part 139 airports compared to NPIAS non-certificated airports was 23 times higher during this same time. Although this may be explained by a different mix of aircraft using these two different categories of airports, the magnitude of the difference indicates that actual reporting rates for NPIAS GA airports are much lower than for Part 139 airports. This is supported in the study by an examination of reporting rates for damaging strikes where the magnitude of difference is much less. Whereas Part 139 airports had a 23-fold higher average reporting rate for all strikes compared to NPIAS GA airports, the reporting rate for damaging strikes was only 5-fold higher. Thus, even though fewer total damaging strikes are reported compared to Part 139 airports, there is more of a tendency at NPIAS GA airports to report damaging strikes compared to non-damaging strikes. As stated above, increased monitoring of wildlife conditions and reporting of even non-damaging strikes are important to prevent dangerous conditions and damaging strikes before they occur.

Benito DeLeon,

Director, Office of Airport Planning and Programming.

[FR Doc. 2012–29591 Filed 12–7–12; 8:45 am]

BILLING CODE P

[1] This underreporting may be partly due requirement in part 139 that Class I–III airports conduct a wildlife hazard assessment and then implement a wildlife hazard management plan should one of four specified triggering events occur at the airport.

FEDERAL REGISTER

Vol. 77 Monday,

No. 237 December 10, 2012

Part II

Department of Defense
General Services Administration
National Aeronautics and Space Administration

48 CFR Chapter 1

Federal Acquisition Regulations; Final Rules

DEPARTMENT OF DEFENSE

GENERAL SERVICES ADMINISTRATION

NATIONAL AERONAUTICS AND SPACE ADMINISTRATION

48 CFR Chapter 1

[Docket FAR 2012–0080, Sequence 6]

Federal Acquisition Regulation; Federal Acquisition Circular 2005–63; Introduction

AGENCIES: Department of Defense (DoD), General Services Administration (GSA), and National Aeronautics and Space Administration (NASA).

ACTION: Summary presentation of an interim rule.

SUMMARY: This document summarizes the Federal Acquisition Regulation (FAR) rule agreed to by the Civilian Agency Acquisition Council and the Defense Acquisition Regulations Council (Councils) in this Federal Acquisition Circular (FAC) 2005–63. A companion document, the *Small Entity Compliance Guide* (SECG), follows this FAC. The FAC, including the SECG, is available via the Internet at *http://www.regulations.gov.*

DATES: For effective date and comment date, see separate document which follows.

FOR FURTHER INFORMATION CONTACT: The analyst whose name appears in the table below. Please cite FAC 2005–63 and the specific FAR case number. For information pertaining to status or publication schedules, contact the Regulatory Secretariat at 202–501–4755.

RULE IN FAC 2005–63

Subject	FAR Case	Analyst
Iran Threat Reduction	2012–030	Davis.

SUPPLEMENTARY INFORMATION: A summary for the FAR rule follows. For the actual revisions and/or amendments made by this FAR case, refer to the document following this item summary. FAC 2005–63 amends the FAR as specified below:

Iran Threat Reduction (FAR Case 2012–030) (Interim)

This interim rule amends the Federal Acquisition Regulation (FAR) to require certifications that implement the expansion of sanctions relating to the energy sector of Iran and sanctions with respect to Iran's Revolutionary Guard Corps, as contained in Titles II and III of the Iran Threat Reduction and Syria Human Rights Act of 2012. This interim rule will not have a significant economic impact on a substantial number of small entities.

Dated: December 3, 2012.

Laura Auletta,

Director, Office of Governmentwide Acquisition Policy, Office of Acquisition Policy, Office of Governmentwide Policy.

Federal Acquisition Circular (FAC) 2005–63 is issued under the authority of the Secretary of Defense, the Administrator of General Services, and the Administrator for the National Aeronautics and Space Administration.

Unless otherwise specified, all Federal Acquisition Regulation (FAR) and other directive material contained in FAC 2005–63 is effective December 10, 2012.

Dated: December 4, 2012.

Linda W. Neilson,

Deputy Director, Defense Procurement and Acquisition Policy (Defense Acquisition Regulations System).

Dated: December 3, 2012.

Laura Auletta,

Acting Senior Procurement Executive, Office of Acquisition Policy, U.S. General Services Administration.

Dated: December 3, 2012.

William P. McNally,

Assistant Administrator for Procurement, National Aeronautics and Space Administration.

[FR Doc. 2012–29638 Filed 12–7–12; 8:45 am]

BILLING CODE 6820–EP–P

DEPARTMENT OF DEFENSE

GENERAL SERVICES ADMINISTRATION

NATIONAL AERONAUTICS AND SPACE ADMINISTRATION

48 CFR Parts 4, 25, and 52

[FAC 2005–63; FAR Case 2012–030; Docket 2012–0030, Sequence 1]

RIN 9000–AM44

Federal Acquisition Regulation; Iran Threat Reduction

AGENCY: Department of Defense (DoD), General Services Administration (GSA), and National Aeronautics and Space Administration (NASA).

ACTION: Interim rule.

SUMMARY: DoD, GSA, and NASA are issuing an interim rule amending the Federal Acquisition Regulation (FAR) to require certifications that implement the expansion of sanctions relating to the energy sector of Iran and sanctions with respect to Iran's Revolutionary Guard Corps, as contained in Titles II and III of the Iran Threat Reduction and Syria Human Rights Act of 2012.

DATES: *Effective Date:* December 10, 2012.

Comment Date: Interested parties should submit written comments to the Regulatory Secretariat on or before February 8, 2013 to be considered in the formulation of a final rule.

ADDRESSES: Submit comments identified by FAC 2005–63, FAR Case 2012–030, by any of the following methods:

- *Regulations.gov: http://www.regulations.gov.* Submit comments via the Federal eRulemaking portal by searching ''FAR Case 2012–030'' select the link ''Submit a Comment'' that corresponds with ''FAR Case 2012–030.'' Follow the instructions provided at the ''Submit a Comment'' screen. Please include your name, company name (if any), and ''FAR Case 2012–030'' on your attached document.
- *Fax:* 202–501–4067.
- *Mail:* General Services Administration, Regulatory Secretariat (MVCB), ATTN: Hada Flowers, 1275 First Street NE., 7th Floor, Washington, DC 20417.

Instructions: Please submit comments only and cite FAC 2005–63, FAR Case 2012–030, in all correspondence related to this case. All comments received will be posted without change to *http://www.regulations.gov,* including any

personal and/or business confidential information provided.

FOR FURTHER INFORMATION CONTACT: Ms. Cecelia L. Davis, Procurement Analyst, at 202–219–0202, for clarification of content. For information pertaining to status or publication schedules, contact the Regulatory Secretariat at 202–501–4755. Please cite FAC 2005–63, FAR Case 2012–030.

SUPPLEMENTARY INFORMATION:

I. Background

DoD, GSA, and NASA are issuing an interim rule amending the Federal Acquisition Regulation (FAR), to implement sections of Titles II and III of the Iran Threat Reduction and Syria Human Rights Act of 2012 (Pub. L. 112–158), enacted August 10, 2012.

Sections 201 and 202 expand sanctions in the Iran Sanctions Act of 1996 (Pub. L. 104–72, 50 U.S.C. 1701 note) with respect to the energy sector of Iran and impose sanctions with respect to transport of crude oil from Iran and evasion of sanctions by shipping companies. Section 203 expands sanctions with respect to development by Iran of weapons of mass destruction.

Section 302 imposes sanctions with respect to persons that support or conduct certain transactions with Iran's Revolutionary Guard Corps or other sanctioned persons.

Section 311 expands the procurement prohibitions of the Iran Sanctions Act as follows:

- Section 311 amends section 6(b)(1) of the Iran Sanctions Act to require, in addition to the certification relating to activities described in section 5 of the Iran Sanctions Act, a certification from each prospective contractor that it, and any person owned and controlled by the prospective contractor, does not knowingly engage in a significant transaction or transactions with Iran's Revolutionary Guard Corps or any of its officials, agents or affiliates.
- In addition, section 311 amends the remedies and waiver provisions at section 6(b)(2) and (5), which are applicable to both certifications now required by section 6(b)(1).

The exception for eligible products from designated countries under the Trade Agreements Act is specified at section 302(f), which makes section 5(f) of the Iran Sanctions Act applicable to the new sanctions relating to transactions with Iran's Revolutionary Guard Corps, and section 6(b)(3) of the Iran Sanctions Act, which relates to the certification requirement.

II. Discussion and Analysis

This interim rule amends the FAR to address the new sanctions and certification requirement as follows:

- Certification relating to activities described in section 5 of the Iran Sanctions Act (FAR 25.703–2(a)(1))—Replaces the list summarizing the activities subject to sanctions with a more top-level description of the types of activities subject to sanctions, because numerous activities that may be subject to sanctions have been added to section 5 of the Iran Sanctions Act by sections 201–203 of this new Act.
- Certification relating to transactions with Iran's Revolutionary Guard Corps (FAR 25.703–2(a)(2))—Adds a new certification requirement to implement section 311(a) of this new Act. Specifies that a significant transaction, for purposes of this rule, is any transaction that exceeds $3,000, and uses the $3,000 threshold throughout the rule.
- Remedies (FAR 25.703–2(b))—Amends paragraph (b)(3) to require debarment period to be at least 2 years to implement section 311(b)(1)(B)(i)(II) of this new Act.
- Exceptions (25.703–2(c) and 25.703–3(c))—Simplifies and clarifies the exception for acquisitions subject to trade agreements.
- Waiver (FAR 25.703–4)—Amends the waiver requirement to implement changes required by section 311(b)(1)(C) of this new Act. Waivers of the 25.703–2 certification requirements must be ''essential to the national security interest of the United States.''
- Solicitation provisions (FAR 52.212–3(o) and 52.225–25)—Adds the new certification requirement to implement section 311(a) of this new Act to add the condition that, by submission of its offer, the offeror certifies that it, and any person owned or controlled by it, does not knowingly engage in any transaction that exceeds $3,000 with Iran's Revolutionary Guard Corps or any of its officials, agents, or affiliates.
- Annual Representations and Certifications (FAR 4.1202 and FAR 52.204–8)—Makes conforming changes to revise references to title and date of FAR 52.225–25.

III. Determinations

The Federal Acquisition Regulatory (FAR) Council has made the following determinations with respect to the rule's application of titles II and III of the Iran Threat Reduction and Syria Human Rights Act of 1012 (Pub. L. 112–158) to contracts in amounts not greater than the simplified acquisition threshold (SAT), contracts for the acquisition of commercial items, and contracts for the acquisition of commercially available off-the-shelf (COTS) items.

A. Applicability to Contracts at or Below the Simplified Acquisition Threshold

41 U.S.C. 1905 governs the applicability of laws to contracts or subcontracts in amounts not greater than the SAT. It is intended to limit the applicability of laws to them. If a provision of law contains criminal or civil penalties, or if the FAR Council makes a written determination that it is not in the best interest of the Federal Government to exempt contracts or subcontracts at or below the SAT, the law will apply to them. Therefore, given that the requirements of titles II and III of the Iran Threat Reduction and Syria Human Rights Act of 2012 were enacted to widen the sanctions against Iran, the FAR Council has determined that it is in the best interest of the Federal Government to apply this rule to all acquisitions including contracts at or below the SAT, as defined at FAR 2.101. An exception for acquisitions at or below the SAT would exclude a significant portion of Federal contracting and the contractors who provide these products and services, thereby undermining the overarching public policy purpose of the law.

B. Applicability to Contracts for the Acquisition of Commercial Items

41 U.S.C. 1906 governs the applicability of laws to contracts for the acquisition of commercial items, and is intended to limit the applicability of laws to contracts for the acquisition of commercial items. If a provision of law contains criminal or civil penalties, or if the FAR Council makes a written determination that it is not in the best interest of the Federal Government to exempt commercial item contracts, the provision of law will apply to contracts for the acquisition of commercial items. Therefore, given that the requirements of titles II and III of the Iran Threat Reduction and Syria Human Rights Act of 2012 were enacted to widen the sanctions against Iran, the FAR Council has determined that it is in the best interest of the Federal Government to apply the rule to contracts for the acquisition of commercial items, as defined at FAR 2.101. An exception for contracts for the acquisition of commercial items would exclude a significant portion of Federal contracting and the contractors who provide these products and services, thereby undermining the overarching public policy purpose of the law.

C. Applicability to Contracts for the Acquisition of Commercially Available Off-the-Shelf Items

41 U.S.C. 1907 governs the applicability of laws to contracts for the acquisition of COTS items, and is intended to limit the applicability of laws to them. If a provision of law contains criminal or civil penalties, or if the Administrator for Federal Procurement Policy makes a written determination that it is not in the best interest of the Federal Government to exempt contracts for the acquisition of COTS items, the provision of law will apply. Therefore, given that the requirements of titles II and III of the Iran Threat Reduction and Syria Human Rights Act of 2012 were enacted to widen the sanctions against Iran, the Administrator for Federal Procurement Policy has determined that it is in the best interest of the Federal Government to apply the rule to contracts for the acquisition of COTS items, as defined at FAR 2.101. An exception for contracts for the acquisition of COTS items would exclude a significant portion of Federal contracting and the contractors who provide these products and services, thereby undermining the overarching public policy purpose of the law.

IV. Executive Order 12866 and 13563

Executive Orders (E.O.s) 12866 and 13563 direct agencies to assess all costs and benefits of available regulatory alternatives and, if regulation is necessary, to select regulatory approaches that maximize net benefits (including potential economic, environmental, public health and safety effects, distributive impacts, and equity). E.O. 13563 emphasizes the importance of quantifying both costs and benefits, of reducing costs, of harmonizing rules, and of promoting flexibility. This is a significant regulatory action and, therefore, was subject to review under Section 6(b) of E.O. 12866, Regulatory Planning and Review, dated September 30, 1993. This rule is not a major rule under 5 U.S.C. 804.

V. Regulatory Flexibility Act

The Department of Defense, the General Services Administration, and the National Aeronautics and Space Administration do not expect this interim rule to have a significant economic impact on a substantial number of small entities within the meaning of the Regulatory Flexibility Act,5 U.S.C. 601, *et seq.,* because this rule will only have significant impact on an offeror that is engaging in an activity for which sanctions may be imposed under section 5 of the Iran Sanctions Act or certain transactions with Iran's Revolutionary Guard Corps. Domestic entities generally do not engage in activity that would cause them to be subject to the procurement bans described in this rule due to current restrictions on trade with Iran (see, *e.g.,* Department of Treasury Office of Foreign Assets Control regulations at 31 CFR part 560). Accordingly, it is expected that the number of domestic entities significantly impacted by this rule will be minimal, if any. The Regulatory Flexibility Act is for the protection of United States small entities, not foreign entities. Therefore, an Initial Regulatory Flexibility Analysis has not been performed. DoD, GSA, and NASA invite comments from small business concerns and other interested parties on the expected impact of this rule on small entities.

DoD, GSA, and NASA will also consider comments from small entities concerning the existing regulations in subparts affected by the rule in accordance with 5 U.S.C. 610. Interested parties must submit such comments separately and should cite 5 U.S.C. 610 (FAC 2005–63, FAR Case 2012–030), in correspondence.

VI. Paperwork Reduction Act

The interim rule does not contain any information collection requirements that require the approval of the Office of Management and Budget under the Paperwork Reduction Act (44 U.S.C. chapter 35).

VII. Determination To Issue an Interim Rule

A determination has been made under the authority of the Secretary of Defense (DoD), the Administrator of General Services (GSA), and the Administrator of the National Aeronautics and Space Administration (NASA) that urgent and compelling reasons exist to promulgate this interim rule without prior opportunity for public comment. This action is necessary because the rule implements titles II and III of the Iran Threat Reduction and Syria Human Rights Act of 2012 (Pub. L. 112–158), which was signed on August 10, 2012. The certification requirement of section 311 becomes effective 120 days after enactment (December 8, 2012). Implementation of these economic sanctions through a certification requirement is part of a comprehensive policy directed towards the goal of compelling Iran to abandon efforts to acquire a nuclear weapons capability and other threatening activities. This is consistent with the objective of the President and Congress to prevent Iran from getting a nuclear weapon. However, pursuant to 41 U.S.C. 1707 and FAR 1.501–3(b), DoD, GSA, and NASA will consider public comments received in response to this interim rule in the formation of the final rule.

List of Subjects in 48 CFR Parts 4, 25 and 52

Government procurement.

Dated: December 3, 2012.

Laura Auletta,

Director, Office of Governmentwide Acquisition Policy, Office of Acquisition Policy, Office of Governmentwide Policy.

Therefore, DoD, GSA, and NASA amend 48 CFR parts 4, 25 and 52 as set forth below:

■ 1. The authority citation for 48 CFR parts 4, 25, and 52 is revised to read as follows:

Authority: 40 U.S.C. 121(c); 10 U.S.C. chapter 137; and 51 U.S.C. 20113).

PART 4—ADMINISTRATIVE MATTERS

■ 2. Amend section 4.1202 by revising paragraph (y) to read as follows:

4.1202 Solicitation provision and contract clause.

* * * * *

(y) 52.225–25, Prohibition on Contracting with Entities Engaging in Certain Activities or Transactions Relating to Iran—Representation and Certifications.

* * * * *

PART 25—FOREIGN ACQUISITION

■ 3. Amend section 25.700 by revising paragraphs (c) and (d) to read as follows:

25.700 Scope of subpart.

* * * * *

(c) The Iran Sanctions Act of 1996 (Iran Sanctions Act) (Pub. L. 104–172; 50 U.S.C. 1701 note), including amendments by the Iran Freedom Support Act (Pub. L. 109–293), section 102 of the Comprehensive Iran Sanctions, Accountability, and Divestment Act of 2010 (Pub. L. 111–195), and Titles II and III of the Iran Threat Reduction Act and Syria Human Rights Act of 2012 (Pub. L. 112–158); and

(d) Prohibition against contracting with entities that export sensitive technologies to Iran (22 U.S.C. 8515).

■ 4. Amend section 25.703 by revising the section heading to read as follows:

25.703 Prohibition on contracting with entities that engage in certain activities or transactions relating to Iran.

* * * * *

■ 5. Revise section 25.703–2 to read as follows:

25.703–2 Iran Sanctions Act.

(a) *Certification*—(1) *Certification relating to activities described in section 5 of the Iran Sanctions Act.* As required by section 6(b)(1)(A) of the Iran Sanctions Act (50 U.S.C. 1701 note), unless an exception applies in accordance with paragraph (c) of this subsection, or a waiver is granted in accordance with 25.703–4, each offeror must certify that the offeror, and any person owned or controlled by the offeror, does not engage in any activity for which sanctions may be imposed under section 5 of the Iran Sanctions Act. Such activities, which are described in detail in section 5 of the Iran Sanctions Act, relate to the energy sector of Iran and development by Iran of weapons of mass destruction or other military capabilities.

(2) *Certification relating to transactions with Iran's Revolutionary Guard Corps.* As required by section 6(b)(1)(B) of the Iran Sanctions Act (50 U.S.C. 1701 note), unless an exception applies in accordance with paragraph (c) of this subsection, or a waiver is granted in accordance with 25.703–4, each offeror must certify that the offeror, and any person owned or controlled by the offeror, does not knowingly engage in any significant transaction (*i.e.,* a transaction that exceeds $3,000) with Iran's Revolutionary Guard Corps or any of its officials, agents, or affiliates, the property and interests in property of which are blocked pursuant to the International Emergency Economic Powers Act (50 U.S.C. 1701 *et seq.*) (see OFAC's Specially Designated Nationals and Blocked Persons List at *http://www.treasury.gov/ofac/downloads/t11sdn.pdf*).

(b) *Remedies.* Upon the determination of a false certification under paragraph (a) of this subsection, the agency shall take one or more of the following actions:

(1) The contracting officer terminates the contract in accordance with procedures in part 49, or for commercial items, see 12.403.

(2) The suspending official suspends the contractor in accordance with the procedures in subpart 9.4.

(3) The debarring official debars the contractor for a period of at least two years in accordance with the procedures in subpart 9.4.

(c) *Exception for trade agreements.* The certification requirements of paragraph (a) of this subsection do not apply if the acquisition is subject to trade agreements and the offeror certifies that all the offered products are designated country end products or designated country construction material (see subpart 25.4).

■ 6. Amend section 25.703–3 by revising the section heading, and paragraphs (a) and (c) to read as follows:

25.703–3 Prohibition on contracting with entities that export sensitive technology to Iran.

(a) The head of an executive agency may not enter into or extend a contract for the procurement of goods or services with a person that exports certain sensitive technology to Iran, as determined by the President and listed on the Excluded Parties List System via *https://www.acquisition.gov* (22 U.S.C. 8515).

* * * * *

(c) *Exception for trade agreements.* The representation requirement of paragraph (b) of this subsection does not apply if the acquisition is subject to trade agreements and the offeror certifies that all the offered products are designated country end products or designated country construction material (see subpart 25.4).

■ 7. Revise section 25.703–4 to read as follows:

25.703–4 Waiver.

(a) An agency or contractor seeking a waiver of the requirements of 25.703–2 or 25.703–3, consistent with section 6(b)(5) of the Iran Sanctions Act or 22 U.S.C. 8551(b), respectively, and the Presidential Memorandum of September 23, 2010 (75 FR 67025), shall submit the request to the Office of Federal Procurement Policy, allowing sufficient time for review and approval.

(b) Agencies may request a waiver on an individual or class basis; however, waivers are not indefinite and can be cancelled, if warranted.

(1) A class waiver may be requested only when the class of supplies or equipment is not available from any other source and it is in the national interest.

(2) Prior to submitting the waiver request, the request must be reviewed and cleared by the agency head.

(c) In general, all waiver requests should include the following information:

(1) Agency name, complete mailing address, and point of contact name, telephone number, and email address.

(2) Offeror's name, complete mailing address, and point of contact name, telephone number, and email address.

(3) Description/nature of product or service.

(4) The total cost and length of the contract.

(5) Justification, with market research demonstrating that no other offeror can provide the product or service and stating why the product or service must be procured from this offeror.

(i) If the offeror exports sensitive technology to the government of Iran or any entities or individuals owned or controlled by, or acting on behalf or at the direction of, the government of Iran, provide rationale why it is in the national interest for the President to waive the prohibition on contracting with this offeror, as required by 22 U.S.C. 8551(b).

(ii) If the offeror conducts activities for which sanctions may be imposed under section 5 of the Iran Sanctions Act or engages in any transaction that exceeds $3,000 with Iran's Revolutionary Guard Corps or any of its officials, agents, or affiliates, the property and interests in property of which are blocked pursuant to the International Emergency Economic Powers Act, provide rationale why it is essential to the national security interests of the United States for the President to waive the prohibition on contracting with this offeror, as required by section 6(b)(5) of the Iran Sanctions Act.

(6) Documentation regarding the offeror's past performance and integrity (see the Past Performance Information Retrieval System and the Federal Awardee Performance Information and Integrity System at *www.ppirs.gov,* and any other relevant information).

(7) Information regarding the offeror's relationship or connection with other firms that—

(i) Export sensitive technology to the government of Iran or any entities or individuals owned or controlled by, or acting on behalf or at the direction of, the government of Iran;

(ii) Conduct activities for which sanctions may be imposed under section 5 of the Iran Sanctions Act; or

(iii) Conduct any transaction that exceeds $3,000 with Iran's Revolutionary Guard Corps or any of its officials, agents, or affiliates, the property and interests in property of which are blocked pursuant to the International Emergency Economic Powers Act.

(8) *Describe*— (i) The sensitive technology and the entity or individual to which it was exported (*i.e.,* the government of Iran or an entity or individual owned or controlled by, or acting on behalf or at the direction of, the government of Iran);

(ii) The activities in which the offeror is engaged for which sanctions may be imposed under section 5 of the Iran Sanctions Act; or

(iii) The transactions that exceed $3,000 with Iran's Revolutionary Guard Corps or any of its officials, agents, or affiliates, the property and interests in property of which are blocked pursuant to the International Emergency Economic Powers Act.

■ 8. Amend section 25.1103 by revising paragraph (e) to read as follows:

25.1103 Other provisions and clauses.

* * * * *

(e) The contracting officer shall include in all solicitations the provision at 52.225–25, Prohibition on Contracting with Entities Engaging in Certain Activities or Transactions Relating to Iran—Representation and Certifications.

PART 52—SOLICITATION PROVISIONS AND CONTRACT CLAUSES

■ 9. Amend section 52.204–8 by revising the date of the provision and paragraph (c)(1)(xx) to read as follows:

52.204–8 Annual Representations and Certifications.

* * * * *

ANNUAL REPRESENTATIONS AND CERTIFICATIONS (DEC 2012)

* * * * *

(c)(1) * * *

(xx) 52.225–25, Prohibition on Contracting with Entities Engaging in Certain Activities or Transactions Relating to Iran—Representation and Certifications. This provision applies to all solicitations.

* * * * *

■ 10. Amend section 52.212–3 by revising the date of the provision and paragraph (o) to read as follows:

52.212–3 Offeror Representations and Certifications—Commercial Items.

* * * * *

OFFEROR REPRESENTATIONS AND CERTIFICATIONS—COMMERCIAL ITEMS (DEC 2012)

* * * * *

(o) *Prohibition on contracting with entities engaging in certain activities or transactions relating to Iran.* (1) The offeror shall email questions concerning sensitive technology to the Department of State at CISADA106@state.gov.

(2) *Representation and certifications.* Unless a waiver is granted or an exception applies as provided in paragraph (o)(3) of this provision, by submission of its offer, the offeror—

(i) Represents, to the best of its knowledge and belief, that the offeror does not export any sensitive technology to the government of Iran or any entities or individuals owned or controlled by, or acting on behalf or at the direction of, the government of Iran;

(ii) Certifies that the offeror, or any person owned or controlled by the offeror, does not engage in any activities for which sanctions may be imposed under section 5 of the Iran Sanctions Act; and

(iii) Certifies that the offeror, and any person owned or controlled by the offeror, does not knowingly engage in any transaction that exceeds $3,000 with Iran's Revolutionary Guard Corps or any of its officials, agents, or affiliates, the property and interests in property of which are blocked pursuant to the International Emergency Economic Powers Act (50 U.S.C. 1701 *et seq.*) (see OFAC's Specially Designated Nationals and Blocked Persons List at *http://www.treasury.gov/ofac/downloads/t11sdn.pdf*).

(3) The representation and certification requirements of paragraph (o)(2) of this provision do not apply if—

(i) This solicitation includes a trade agreements certification (*e.g.,* 52.212–3(g) or a comparable agency provision); and

(ii) The offeror has certified that all the offered products to be supplied are designated country end products.

* * * * *

■ 11. Amend section 52.225–25 by—

■ a. Revising the section heading and date of the provision; and

■ b. Revising paragraph (c) and the introductory text of paragraph (d) to read as follows:

52.225–25 Prohibition on Contracting with Entities Engaging in Certain Activities or Transactions Relating to Iran—Representation and Certifications.

* * * * *

PROHIBITION ON CONTRACTING WITH ENTITIES ENGAGING IN CERTAIN ACTIVITIES OR TRANSACTIONS RELATING TO IRAN—REPRESENTATION AND CERTIFICATIONS (DEC 2012)

* * * * *

(c) Except as provided in paragraph (d) of this provision or if a waiver has been granted in accordance with 25.703–4, by submission of its offer, the offeror—

(1) Represents, to the best of its knowledge and belief, that the offeror does not export any sensitive technology to the government of Iran or any entities or individuals owned or controlled by, or acting on behalf or at the direction of, the government of Iran;

(2) Certifies that the offeror, or any person owned or controlled by the offeror, does not engage in any activities for which sanctions may be imposed under section 5 of the Iran Sanctions Act. These sanctioned activities are in the areas of development of the petroleum resources of Iran, production of refined petroleum products in Iran, sale and provision of refined petroleum products to Iran, and contributing to Iran's ability to acquire or develop certain weapons or technologies; and

(3) Certifies that the offeror, and any person owned or controlled by the offeror, does not knowingly engage in any transaction that exceeds $3,000 with Iran's Revolutionary Guard Corps or any of its officials, agents, or affiliates, the property and interests in property of which are blocked pursuant to the International Emergency Economic Powers Act (50 U.S.C. 1701 *et seq.*) (see OFAC's Specially Designated Nationals and Blocked Persons List at *http://www.treasury.gov/ofac/downloads/t11sdn.pdf*).

(d) Exception for trade agreements. The representation requirement of paragraph (c)(1) and the certification requirements of paragraphs (c)(2) and (c)(3) of this provision do not apply if—

* * * * *

[FR Doc. 2012–29639 Filed 12–7–12; 8:45 am]

BILLING CODE 6820–EP–P

DEPARTMENT OF DEFENSE

GENERAL SERVICES ADMINISTRATION

NATIONAL AERONAUTICS AND SPACE ADMINISTRATION

48 CFR Chapter 1

[Docket FAR 2012–0081, Sequence 8]

Federal Acquisition Regulation; Federal Acquisition Circular 2005–63; Small Entity Compliance Guide

AGENCY: Department of Defense (DoD), General Services Administration (GSA), and National Aeronautics and Space Administration (NASA).

ACTION: Small Entity Compliance Guide.

SUMMARY: This document is issued under the joint authority of DOD, GSA, and NASA. This *Small Entity Compliance Guide* has been prepared in accordance with section 212 of the Small Business Regulatory Enforcement Fairness Act of 1996. It consists of a summary of the rule appearing in Federal Acquisition Circular (FAC) 2005–63, which amends the Federal Acquisition Regulation (FAR). An asterisk (*) next to a rule indicates that a regulatory flexibility analysis has been prepared. Interested parties may obtain further information regarding this rule by referring to FAC 2005–63, which precedes this document. These documents are also available via the Internet at *http://www.regulations.gov.*

DATES: December 10, 2012.

FOR FURTHER INFORMATION CONTACT: For clarification of content, contact the analyst whose name appears in the table below. Please cite FAC 2005–63 and the FAR case number. For information pertaining to status or publication schedules, contact the Regulatory Secretariat at 202–501–4755.

RULE IN FAC 2005–63

Subject	FAR Case	Analyst
Iran Threat Reduction ..	2012–030	Davis.

SUPPLEMENTARY INFORMATION: A summary for the FAR rule follows. For the actual revisions and/or amendments made by this FAR case, refer to the documents following this summary. FAC 2005–63 amends the FAR as specified below:

Iran Threat Reduction (FAR Case 2012–030) (Interim)

This interim rule amends the Federal Acquisition Regulation (FAR) to require certifications that implement the expansion of sanctions relating to the energy sector of Iran and sanctions with respect to Iran's Revolutionary Guard Corps, as contained in Titles II and III of the Iran Threat Reduction and Syria Human Rights Act of 2012. This interim rule will not have a significant economic impact on a substantial number of small entities.

Dated: December 3, 2012.

Laura Auletta,

Director, Office of Governmentwide Acquisition Policy, Office of Acquisition Policy, Office of Governmentwide Policy.

[FR Doc. 2012–29634 Filed 12–7–12; 8:45 am]

BILLING CODE P

FEDERAL REGISTER

Vol. 77 Monday,

No. 237 December 10, 2012

Part III

Department of Housing and Urban Development

48 CFR Parts 2401, 2402, 2403 et al.
HUD Acquisition Regulations (HUDAR); Final Rule

DEPARTMENT OF HOUSING AND URBAN DEVELOPMENT

48 CFR Parts 2401, 2402, 2403, 2404, 2406, 2407, 2409, 2415, 2416, 2417, 2419, 2426, 2427, 2428, 2432, 2437, 2439, 2442, and 2452

[Docket No FR–5571–F–02]

RIN 2501–AD56

HUD Acquisition Regulations (HUDAR)

AGENCY: Office of the Chief Procurement Officer, HUD.

ACTION: Final rule.

SUMMARY: This final rule amends the HUDAR to implement miscellaneous changes. These changes include, for example, such amendments as removing provisions that are now obsolete, refining provisions to approve requests for deviation from the HUDAR, updating provisions that address the organizational structure of HUD, and adding provisions on contractor record retention.

DATES: *Effective date:* January 9, 2013.

FOR FURTHER INFORMATION CONTACT: David S. Blocker, Deputy Assistant Chief Procurement Officer for Policy, Oversight, and Systems, Office of the Chief Procurement Officer, Department of Housing and Urban Development, 451 7th Street SW., Washington, DC 20410; telephone number 202–708–0294 (this is not a toll-free number) and fax number 202–708–8912. Persons with hearing or speech impairments may access Mr. Blocker's telephone number via TTY by calling the toll-free Federal Relay Service at 800–877–8339.

SUPPLEMENTARY INFORMATION: This final rule follows a proposed rule. No public comments were received on the proposed rule, and this final rule implements the proposed rule with only minor technical changes.

I. Background

The uniform regulation for the procurement of supplies and services by federal departments and agencies, the Federal Acquisition Regulation (FAR), was promulgated on September 19, 1983 (48 FR 42102). The FAR is codified in title 48, chapter 1, of the Code of Federal Regulations. HUD promulgated its regulation to implement the FAR on March 1, 1984 (49 FR 7696).

The HUDAR (title 48, chapter 24 of the Code of Federal Regulations) is prescribed under section 7(d) of the Department of HUD Act (42 U.S.C. 3535(d)); section 205(c) of the Federal Property and Administrative Services Act of 1949 (40 U.S.C. 121(c)); and the general authorization in FAR 1.301. HUDAR was last revised by final rule published on January 13, 2006 (71 FR 2432).

II. Public Comments

The proposed rule was published on March 16, 2012 (77 FR 15681), and the public comment period closed on May 15, 2012. As of the close of the public comment period, no public comments were received.

III. This Final Rule

This final rule implements without substantive change (there are minor corrections) the proposed amendments to the HUDAR, made by proposed rule published on March 16, 2012 (77 FR 15681). The proposed rule inadvertently omitted, in 2432.908, a paragraph prescribing the usage of HUDAR clause 2452.232–70. This necessary paragraph is now added at 2432.908(c)(2). The subsequent paragraphs are accordingly redesignated. In the newly designated 2432.908(c)(2), which is 2432.908(c)(1) in the currently codified HUDAR, a revision is made to reflect that the indicated clause is not used in performance-based contracts under which performance-based payments will be used. This is not a change in policy or contracting practice. The authority citations for certain sections are revised in this final rule because they were improperly worded (the authorities cited were and are correct, however). A reference to paragraph (a) in § 2432.908 was incorrect. The reference is corrected in this final rule to (c)(1).

The preamble to the proposed rule explained in detail the changes proposed; see 77 FR 15682 *et seq.* for a full description of the substantive changes made to the HUDAR that are implemented in this final rule.

IV. Findings and Certifications

Paperwork Reduction Act Statement

The information collection requirements contained in this final rule are currently approved by the Office of Management and Budget (OMB) in accordance with the Paperwork Reduction Act of 1995 (44 U.S.C. 3501–3520) and assigned OMB control number 2535–0091. The information collection requirements for the HUDAR are currently approved by OMB under control number 2535–0091. In accordance with the Paperwork Reduction Act, an agency may not conduct or sponsor, and a person is not required to respond to, a collection of information, unless the collection displays a currently valid OMB control number.

Unfunded Mandates Reform Act

Title II of the Unfunded Mandates Reform Act of 1995 (2 U.S.C. 1531–1538) (UMRA) establishes requirements for federal agencies to assess the effects of their regulatory actions on state, local, and tribal governments and the private sector. This rule does not impose any federal mandate on any state, local, or tribal government or the private sector within the meaning of UMRA.

Regulatory Flexibility Act

The Regulatory Flexibility Act (RFA) (5 U.S.C. 601 *et seq.*) generally requires an agency to conduct a regulatory flexibility analysis of any rule subject to notice and comment rulemaking requirements, unless the agency certifies that the rule will not have a significant economic impact on a substantial number of small entities. This final rule makes technical changes to existing contracting procedures and does not make any major changes that would significantly impact businesses. Accordingly, the undersigned certifies that this rule will not have a significant economic impact on a substantial number of small entities.

Environmental Impact

This final rule does not direct, provide for assistance or loan and mortgage insurance for, or otherwise govern or regulate real property acquisition, disposition, leasing, rehabilitation, alteration, demolition, or new construction, or establish, revise, or provide for standards for construction or construction materials, manufactured housing, or occupancy. Accordingly, under 24 CFR 50.19(c)(1), this final rule is categorically excluded from environmental review under the National Environmental Policy Act of 1969 (42 U.S.C. 4321).

Executive Order 13132, Federalism

Executive Order 13132 (entitled ''Federalism'') prohibits an agency from publishing any rule that has federalism implications if the rule imposes substantial direct compliance costs on state and local governments and is not required by statute, or the rule preempts state law, unless the agency meets the consultation and funding requirements of section 6 of the Executive Order. This final rule would not have federalism implications and would not impose substantial direct compliance costs on state and local governments or preempt state law within the meaning of the Executive Order.

List of Subjects

48 CFR Part 2401

Government procurement, Reporting and recordkeeping requirements.

48 CFR Part 2402

Government procurement.

48 CFR Part 2403

Conflict of interests, Government procurement.

48 CFR Part 2404

Government procurement.

48 CFR Parts 2406, 2407, and 2409

Government procurement.

48 CFR Parts 2415, 2416, and 2417

Government procurement.

48 CFR Part 2419

Government procurement, Small business.

48 CFR Part 2426

Colleges and universities, Government procurement, Minority businesses.

48 CFR Part 2427

Government procurement, Inventions and patents.

48 CFR Part 2428

Government procurement, Surety bonds.

48 CFR Part 2432

Government procurement.

48 CFR Part 2437

Government procurement.

48 CFR Part 2439

Computer technology, Government procurement.

48 CFR Part 2442

Government procurement.

48 CFR Part 2452

Government procurement.

For the reasons discussed in the preamble, HUD amends 48 CFR chapter 24 as follows:

PART 2401—FEDERAL ACQUISITION REGULATION SYSTEM

■ 1. The authority citation for part 2401 is revised to read as follows:

Authority: 40 U.S.C. 121(c); 42 U.S.C. 3535(d).

Subpart 2401.1—Purpose, Authority, Issuance

■ 2. Add section 2401.106–70 to read as follows:

2401.106–70 Contract clause.

The contracting officer shall insert the clause at 2452.201–70, Coordination of Data Collection Activities, in solicitations and contracts where the Contractor is required to collect information from ten or more public respondents.

Subpart 2401.4—Deviations From the FAR

■ 3. Revise section 2401.403 to read as follows:

2401.403 Individual deviations.

The Senior Procurement Executive is the agency head's designee for the purposes of FAR 1.403.

■ 4. Revise section 2401.404 to read as follows:

2401.404 Class deviations.

(a) The Senior Procurement Executive is the agency head's designee for the purposes of FAR 1.404(a).

■ 5. Add section 2401.470 to read as follows:

2401.470 Deviations from the HUDAR.

The Senior Procurement Executive is authorized to approve deviations from the HUDAR.

■ 6. Add section 2401.471 to read as follows:

2401.471 Requests for deviations—FAR and HUDAR.

(a) Requests for deviations from the FAR or HUDAR shall be submitted in writing to the Chief Procurement Officer.

(b) Each request for authorization of a deviation from the FAR or HUDAR shall:

(1) Identify the deviation as individual or class;

(2) Identify the FAR or the HUDAR requirement from which a deviation is sought;

(3) Fully describe the deviation, its intended effect, and the circumstances in which it will be used;

(4) Explain why a deviation is required and include pertinent background and supporting information;

(5) State whether the deviation has been requested previously and if so, the circumstances and result of the previous request; and

(6) Identify the contractor(s) and the contract(s) (including dollar values) that would be affected.

(c) At his or her discretion, the Chief Procurement Officer will consider requests for deviations on an expedited basis and, in urgent situations, may authorize deviations via telephone or electronic mail. Such authorizations will be confirmed in writing.

(d) The contracting officer shall include a copy of each authorized deviation in the contract file(s) to which it pertains.

Subpart 2401.6—Career Development, Contracting Authority and Responsibilities

■ 7. In section 2401.602–3, revise paragraphs (b)(1) and (3) and remove paragraph (c)(7).

The revisions read as follows:

2401.602–3 Ratification of unauthorized commitments.

(b)(1) Requests for ratification of unauthorized commitments shall be submitted in writing through the contracting officer to the ratification approval officials identified in paragraph (b)(3) of this section. The Assistant Secretary or equivalent official for the office that created the unauthorized commitment shall sign the request for ratification.

(3) In accordance with FAR 1.602–3(b)(3), the Senior Procurement Executive may delegate the authority to approve ratifications of individual unauthorized commitments down to, but not below, the level of an Assistant Chief Procurement Officer.

* * * * *

PART 2402—DEFINITIONS OF WORDS AND TERMS

■ 8. The authority citation for part 2402 is revised to read as follows:

Authority: 40 U.S.C. 121(c); 42 U.S.C. 3535(d).

Subpart 2402.1—Definitions

■ 9. In section 2402.101, add in alphabetical order a definition of ''*Contracting Activity*,'' remove the definition of ''*Head of Contracting Activity (HCA)*'' and add in its place the definition of ''*Head of the Contracting Activity (HCA)*'' and revise the definition of ''*Legal Counsel*'' to read as follows:

2402.101 Definitions.

* * * * *

Contracting activity means the Office of the Chief Procurement Officer.

* * * * *

Head of the contracting activity (HCA) means the Chief Procurement Officer. As permitted by the FAR and the HUD Acquisition Regulation, the Chief Procurement Officer, acting within his or her authority as the Senior Procurement Executive, may delegate HCA authority for specific actions or classes of actions down to, but not below, the level of the Assistant Chief

Procurement Officers. Delegated HCA authority may not be further redelegated.

Legal counsel means HUD's Office of General Counsel and its field-based components.

* * * * *

PART 2403—IMPROPER BUSINESS PRACTICES AND PERSONAL CONFLICTS OF INTEREST

■ 10. The authority citation for part 2403 continues to read as follows:

Authority: 42 U.S.C. 3535(d).

Subpart 2403.4—Contingent Fees

■ 11. Revise section 2403.405(b) to read as follows:

2403.405 Misrepresentations or violations of the covenant against contingent fees.

* * * * *

(b) When there is specific evidence or other reasonable basis to suspect one or more of the violations in paragraph (a) of this section, the HCA shall review the facts and, if appropriate, take or direct one or more of the actions set forth at FAR 3.405(b). The HCA shall refer suspected fraudulent or criminal matters to HUD's Office of the Inspector General for possible referral to the Department of Justice.

PART 2404—ADMINISTRATIVE MATTERS

■ 12. The authority citation for part 2404 continues to read as follows:

Authority: 42 U.S.C. 3535(d).

■ 13. Add subpart 2404.7 to read as follows:

Subpart 2404.7—Contractor Records Retention

2404.7001 Contract clause.

The contracting officer shall insert the clause at 2452.204–72, Preservation of, and Access to, Contract Records (Tangible and Electronically Stored Information (ESI) Formats), in all solicitations and contracts exceeding the simplified acquisition threshold. The contracting officer shall use the basic clause with its Alternate I in cost-reimbursement type contracts. The contracting officer shall use the basic clause with its Alternate II in labor-hour and time-and-materials contracts.

PART 2406—COMPETITION REQUIREMENTS

■ 14. The authority citation for part 2406 is revised to read as follows:

Authority: 40 U.S.C. 121(c); 41 U.S.C. 253; 42 U.S.C. 3535(d).

Subpart 2406.3—Other Than Full and Open Competition

■ 15. Add section 2406.302–2 to read as follows:

2406.302–2 Unusual and compelling urgency.

(d)(1)(ii) The HCA is the agency head's designee for the purposes of FAR 6.302–2(d)(1)(ii).

2406.304–70 [Removed]

■ 16. Remove section 2406.304–70.

Subpart 2406.5—Competition Advocates

■ 17. Revise section 2406.501 to read as follows:

2406.501 Requirement.

The Senior Procurement Executive is the head of the agency for the purposes of FAR 6.501 and designates the Departmental competition advocate.

PART 2407—ACQUISITION PLANNING

■ 18. The authority citation for part 2404 continues to read as follows:

Authority: Sec. 7(d) of the Department of Housing and Urban Development Act (42 U.S.C. 3535(d)).

Subpart 2407.1—Acquisition Plans

■ 19. Revise section 2407.102 to read as follows:

2407.102 Policy.

The Senior Procurement Executive is responsible for establishing and maintaining internal procedures that meet the criteria contained in FAR subpart 7.1 for acquisition planning and acquisition plan content.

PART 2409—CONTRACTOR QUALIFICATIONS

■ 20. The authority citation for part 2409 is revised to read as follows:

Authority: 40 U.S.C. 121(c); 42 U.S.C. 3535(d).

■ 21. Add subpart 2409.4 to read as follows:

Subpart 2409.4—Debarment, Suspension, and Ineligibility

Sec.
2409.405 Effect of listing.
2409.407–1 General.
2409.470 HUD regulations on debarment, suspension, and ineligibility.

2409.405 Effect of listing.

(3) The Senior Procurement Executive is the agency head's designee under FAR 9.405(d)(3).

2409.407–1 General.

(d) The Senior Procurement Executive is the agency head's designee under FAR 9.407–1(d).

2409.470 HUD regulations on debarment, suspension, and ineligibility.

HUD's policies and procedures concerning debarment and suspension are contained in 2 CFR part 2424.

Subpart 2409.5—Organizational and Consultant Conflicts of Interest

■ 22. Revise section 2409.503 to read as follows:

2409.503 Waiver.

The Senior Procurement executive is the agency head's designee under FAR 9.503.

Subpart 2409.70—[Removed]

■ 23. Remove subpart 2409.70.

PART 2415—CONTRACTING BY NEGOTIATION

■ 24. The authority citation for part 2415 is revised to read as follows:

Authority: 40 U.S.C. 121(c); 41 U.S.C. 253; 42 U.S.C. 3535(d).

■ 25. Revise the heading for subpart 2415.2 to read as follows:

Subpart 2415.2—Solicitation and Receipt of Proposals and Quotations

■ 26. Add section 2415.203 to read as follows:

2415.203 Requests for proposals.

(a)(3) The contracting officer may limit the size of the technical and management portion of offers submitted in response to a request for proposals when the contracting officer determines that it is in the Government's best interest to do so.

■ 27. Revise 2415.204 to read as follows:

2415.204 Contract format.

(e) The HCA shall be responsible for making exemptions pursuant to FAR 15.204(e).

■ 28. Revise section 2415.209 to read as follows:

2415.209 Solicitation provisions and contract clauses.

(a)(1) The Contracting Officer shall insert a provision substantially the same as the provision at 2452.215–70, Proposal Content, in all solicitations for negotiated procurements using the tradeoff selection process (see FAR 15.101–1) expected to exceed the simplified acquisition limit. The Contracting Officer shall adapt

paragraph (c) of the provision (i.e., include, delete, revise, or further supplement subparagraphs) to address the particular requirements of the immediate solicitation. The provision may be used in simplified acquisitions when it is necessary to obtain technical and management information in making the award selection. When award selection will be made through the lowest-priced technically acceptable source selection process, the provision shall be used with its Alternate I. If the proposed contract requires work on, or access to, HUD systems or applications (see the clause at 2452.239–70), the provision shall be used with its Alternate II. When the contracting officer has determined that it is necessary to limit the size of the technical and management portion of offers submitted by offerors, the provision shall be used with its Alternate III. The contracting officer shall clearly identify in the provision any contents of the technical and management portion of offers that are excluded from the size limitation (e.g., proposed contractor staff resumes).

(2) The contracting officer shall insert the provision at 2452.215–71, Relative Importance of Technical Evaluation Factors to Cost or Price, in solicitations for contracts to be awarded using the tradeoff selection process (see FAR 15.101–1) expected to exceed the simplified acquisition limit.

Subpart 2415.3—Source Selection

■ 29. Revise section 2415.303 to read as follows:

2415.303 Responsibilities.

(a) The Senior Procurement Executive is the agency head for the purposes of FAR 15.303(a).

(b)(1) The technical evaluation requirements related to source selection shall be performed by a Technical Evaluation Panel (TEP). The TEP may consist of any number of members as appropriate to the acquisition, with one member serving as the chairperson. As needed, the TEP may include advisors and committees to focus on specific technical areas or concerns. The TEP is responsible for fully documenting the evaluation of all proposals as appropriate to the source selection approach in use and for making the source selection recommendation to the source selection authority.

■ 30. Revise section 2415.304 to read as follows:

2415.304 Evaluation factors and significant subfactors.

(c)(3)(i) The extent of participation of small businesses in performance of the contract, whether as a joint venture, teaming arrangement, or subcontractor, shall be addressed in the source selection for contracts to be awarded using the tradeoff source selection process (see FAR 15.101–1) that require the use of the clause at FAR 52.219–9, Small Business Subcontracting Plan.

(d) The solicitation shall state the basis for the source selection decision as either the ''lowest price technically acceptable'' (LPTA) process or the ''tradeoff'' process (as defined at FAR subpart 15.1).

■ 31. Revise section 2415.305(a)(3) to read as follows:

2415.305 Proposal evaluation.

(a) * * *

(3) *Technical evaluation.* The TEP shall rate each proposal based on the evaluation factors specified in the solicitation. The TEP shall identify each proposal as being acceptable, unacceptable but capable of being made acceptable, or unacceptable. A proposal shall be considered unacceptable if it is so clearly deficient that it cannot be corrected through written or oral discussions. Under the tradeoff process, predetermined threshold levels of technical acceptability for proposals shall not be employed. A technical evaluation report, which complies with FAR 15.305(a)(3), shall be prepared and signed by the technical evaluators, furnished to the contracting officer, and maintained as a permanent record in the official procurement file.

■ 32. Add section 2415.370 to read as follows:

2415.370 Solicitation provision.

The contracting officer shall insert the provision at 2452.215–72, Evaluation of Small Business Participation, in solicitations for contracts that require the use of the FAR clause in 52.219–9, ''Small Business Subcontracting Plan,'' that will be awarded using the tradeoff source selection process (see FAR 15.101–1).

PART 2416—TYPES OF CONTRACTS

■ 33. The authority citation for part 2416 is revised to read as follows:

Authority: 40 U.S.C. 121(c); 41 U.S.C. 253; 42 U.S.C. 3535(d).

■ 34. Add subpart 2416.3 to read as follows:

Subpart 2416.3—Cost-Reimbursement Contracts

2416.307 Contract clauses.

(a) The contracting officer shall insert the clause at 2452.216–79, Estimated Cost (No Fee), in all cost-reimbursement (no fee) type solicitations and contracts.

(b) The contracting officer shall insert the clause at 2452.216–80, Estimated Cost and Fixed-Fee, in all cost-plus-fixed fee type solicitations and contracts.

Subpart 2416.5—Indefinite-Delivery Contracts

■ 35. Revise section 2416.505 to read as follows:

2416.505 Ordering.

(a) The contracting officer shall be the ordering official for all task orders except as provided for herein. The contracting officer may designate an ordering official when orders are to be placed on a firm fixed-price basis, the prices of the specific services or supplies to be provided under the order are set forth in the contract, and there is no negotiation of order terms. The contracting officer shall not designate ordering officials:

(1) For contracts for services where prices are not tied to delivery of a completed service;

(2) For any contracts where discounts need to be negotiated; or

(3) In any other circumstances where adjustment of contract price or any other terms and conditions is necessary.

(b)(6) The Departmental competition advocate also serves as the Departmental task and delivery order ombudsman in accordance with FAR 16.505(b)(6). In addition to the duties set forth at FAR 16.505(b)(6), the ombudsman shall recommend any corrective action regarding affording fair opportunity to contractors to compete for orders to the responsible contracting officer.

■ 36. In section 2416.506–70, revise paragraph (b) to read as follows:

2416.506–70 Solicitation provisions and contract clauses.

* * * * *

(b) *Minimum and maximum quantities or amounts for order.* The contracting officer shall insert a clause substantially the same as 2452.216–76, Minimum and Maximum Quantities or Amounts for Order, in all indefinite-quantity and requirements solicitations and contracts. When the clause is used for requirements solicitations and contracts, the contracting officer may either delete paragraph (a) or insert ''none'' for the minimum quantity or amount.

* * * * *

PART 2417—SPECIAL CONTRACTING METHODS

■ 37. The authority citation for part 2417 is revised to read as follows:

Authority: 31 U.S.C. 1535; 40 U.S.C. 121(c); 42 U.S.C. 3535(d).

Subpart 2417.2—Options

■ 38. Revise section 2417.204 to read as follows:

2417.204 Contracts.

(e)(1) The Senior Procurement Executive (SPE) is authorized to approve contract periods for other than information technology contracts that exceed the 5-year limit set forth at FAR 17.204(e) that are not otherwise limited by statute (e.g., the Service Contract Act). Except as provided for in paragraphs (e)(2) and (4) of this section, the SPE shall approve any contract period that will exceed 5 years, including all option periods, prior to the award of the basic contract.

(2) With regard to HUD indefinite-delivery contracts, the ''contract period'' requiring the SPE's prior approval in paragraph (e)(1) of this section shall mean the ordering period of a contract. Unless otherwise specified within the contract, the 5-year limit shall not apply to the period that any task or delivery order issued within the contract's ordering period extends beyond the final end date of the contract's ordering period, regardless of whether the performance period of the order causes the total period of the contract to exceed 5 years. The issuance of any such task or delivery order does not require the SPE's approval. Task or delivery orders with end dates extending beyond the ordering period of the contract may not exceed the final delivery date that the contracting officer has stated in the applicable indefinite-delivery FAR clause included in the contract (i.e., 52.216–20, ''Definite Quantity,'' paragraph (d); 52.216–21, ''Requirements,'' paragraph (f); or 52.216–22, ''Indefinite Quantity,'' paragraph (d)).

(3) The SPE's authority described in paragraphs (e)(1) and (2) of this section shall not be used as the basis to retroactively increase or extend the period of any existing contract.

(4) The SPE is not required to approve any option properly exercised pursuant to the FAR clause at 52.217–8, ''Option to Extend Services,'' that extends the contract period beyond 5 years; provided that the total length of all options exercised pursuant to FAR clause 52.217–8 may not exceed 6 months; and provided that exercise of any such options shall be in accordance with FAR 37.111. Any proposed extension of a contract beyond the 6-month maximum permitted by FAR 52.217–8 shall be considered a new requirement and shall be subject to the competition requirements of FAR part 6.

PART 2419—SMALL BUSINESS PROGRAMS

■ 39. The authority citation for part 2419 is revised to read as follows:

Authority: 40 U.S.C. 121(c); 42 U.S.C. 3535(d).

Subpart 2419.2—Policies

■ 40. In section 2419.201, redesignate paragraphs (c) and (d) as paragraphs (d) and (e), respectively, and revise newly designated paragraphs (d), (e) introductory text, and (e)(1), to read as follows:

2419.201 General policy.

(d) The Director of HUD's Office of Small and Disadvantaged Business Utilization (OSDBU) is responsible for the administration of the HUD small business program and for performing all functions and duties prescribed in FAR 19.201(d). This includes Department-wide responsibility for developing, implementing, executing, and managing these programs; providing advice on these programs; and representing HUD before other government agencies on matters primarily affecting small, small disadvantaged, and women-owned small business; HUBZone small business; veteran-owned small business; and service-disabled veteran-owned small business concerns.

(e) The Director of OSDBU shall designate small business specialists who shall advise and assist HUD's contracting activity and small business concerns as described in paragraph (d) on all matters related to small business participation in HUD acquisitions. Small business specialists shall perform the following functions:

(1) Maintain a program designed to locate capable small-business sources as referenced in paragraph (d) of this section for current and future procurements;

* * * * *

Subpart 2419.5—Set-Asides for Small Business

2419.503 [Removed and Reserved]

■ 41. Remove and reserve section 2419.503.

Subpart 2419.7—The Small Business Subcontracting Program

■ 42. Revise section 2419.708 to read as follows:

2419.708 Solicitation provisions and contract clauses.

(b) The contracting officer shall insert clause at 2452.219–73, ''Incorporation of Subcontracting Plan,'' in solicitations and contracts when a subcontracting plan is required. The contracting officer shall insert the provision at 2452.219–74, ''Small Business Subcontracting Goals,'' in solicitations for contracts that are required to include the FAR clauses at 52.219–8, ''Utilization of Small Business Concerns,'' and 52.219–9, ''Small Business Subcontracting Plan.''

(d) The contracting officer shall insert the provision at 2452.219–70, Small Business Subcontracting Plan Compliance, in solicitations for contracts that are expected to exceed the dollar thresholds set forth at FAR 19.702 and are required to include the clause at FAR 52.219–9, Small Business Subcontracting Plan.

Subpart 2419.8—Contracting With the Small Business Administration (the 8(a) Program)

■ 43. Revise section 2419.800 to read as follows:

2419.800 General.

(f) By Partnership Agreement between the SBA and HUD, the SBA delegated to HUD's Senior Procurement Executive its authority under paragraph 8(a)(1)(A) of the Small Business Act (5 U.S.C. 637(a)) to enter into 8(a) prime contracts, and its authority under 8(a)(1)(B) of the Small Business Act to award the performance of those contracts to eligible 8(a) Program participants. Under the Partnership Agreement, a contract may be awarded directly to an 8(a) firm on either a sole-source or competitive basis. The SBA reserves the right to withdraw the delegation issued as a result of the Partnership Agreement; however, any such withdrawal shall have no effect on contracts already awarded under the Partnership Agreement.

■ 44. Add section 2419.803 to read as follows:

2419.803 Selecting acquisitions for the 8(a) Program.

■ 45. Add section 2419.803–70 to read as follows:

2419.803–70 Procedures for simplified acquisitions under the partnership agreement.

(a) HUD contracting officers may use the procedures of FAR part 13 and HUDAR part 2413 to make purchases not exceeding the simplified acquisition threshold from 8(a) Participants. The following apply to such acquisitions:

(1) Neither offering letters to, nor acceptance letters from the SBA are required.

(2) The contracting officer will use the Central Contractor Registration (CCR) database on the Internet (*http://www.ccr.gov*) to establish that the selected 8(a) firm is a current program participant.

(b) Once an 8(a) contractor has been identified, the contracting officer will establish the price with the selected 8(a) contractor.

(c) For acquisitions requiring an award document (e.g., purchase order), the contracting officer will:

(1) Prepare and issue an award document in accordance with the applicable provisions of FAR part 13 and HUDAR part 2413. The applicable clauses prescribed in 2419.811–3 shall be included in the award document. The contracting officer will issue the award document directly to the 8(a) firm; and

(2) Forward to the SBA District Office serving the 8(a) firm a copy of the award document within 5 days after the award is issued.

■ 46. Add section 2419.804 to read as follows:

2419.804 Evaluation, offering, and acceptance.

■ 47. Add section 2419.804–2 to read as follows:

2419.804–2 Agency offering.

(d) When applicable, the notification must identify that the offering is in accordance with the Partnership Agreement identified in 2419.800.

■ 48. Add section 2419.804–3 to read as follows:

2419.804–3 SBA acceptance.

■ 49. Add section 2419.804–370 to read as follows:

2419.804–370 SBA acceptance under partnership agreements for acquisitions exceeding the simplified acquisition threshold.

(a) The following procedures apply to the acceptance of requirements covered by the Partnership Agreement for acquisitions that exceed the simplified acquisition threshold.

(1) The SBA's decision whether to accept the requirement will be transmitted to HUD in writing within 5 working days of receipt of the offer.

(2) The SBA may request, and HUD may grant, an extension beyond the 5-day limit.

(3) SBA's acceptance letters should be faxed or emailed to HUD.

(4) If HUD has not received an acceptance or rejection of the offering from SBA within 5 days of SBA's receipt of the offering letter, the contracting officer may assume that the requirement has been accepted and proceed with the acquisition.

(b) The contents of SBA's acceptance letter shall be limited to the eligibility of the recommended 8(a) contractor.

■ 50. Add section 2419.805 to read as follows:

2419.805 Competitive 8(a).

■ 51. Add section 2419.805–2 to read as follows:

2419.805–2 Procedures.

(b)(3) For requirements exceeding the simplified acquisition threshold that are processed under the Partnership Agreement cited in 2419.800, the contracting officer shall submit the name, address, and telephone number of the low bidder (sealed bid requirements) or the apparent successful offeror (negotiated acquisitions) to the SBA Business Opportunity Specialist at the field office servicing the identified 8(a) firm. The SBA will determine the eligibility of the firm(s) and advise the contracting officer within 2 working days of the receipt of the request. If the firm is determined to be ineligible, the contracting officer will submit information on the next low offeror or next apparent successful offeror (as applicable) to the cognizant SBA field office.

■ 52. Add section 2419.806 to read as follows:

2419.806 Pricing the 8(a) contract.

(a) For contracts awarded under the Partnership Agreement cited in 2419.800, when required by FAR subpart 15.4, the contracting officer shall obtain certified cost or pricing data directly from the 8(a) contractor.

■ 53. Add section 2419.808 to read as follows:

2419.808 Contract negotiation.

■ 54. Add section 2419.808–1 to read as follows:

2419.808–1 Sole source.

(a) If the acquisition is conducted under the Partnership Agreement cited in 2419.800, the 8(a) contractor is responsible for negotiating with HUD within the time frame established by the contracting officer. If the 8(a) contractor does not negotiate within the established time frame, and HUD cannot allow additional time, HUD, after notification and approval by SBA, may proceed with the acquisition from other sources.

(b) If the acquisition is conducted under the Partnership Agreement cited in 2419.800, HUD is delegated the authority to negotiate directly with the 8(a) participant; however, if requested by the 8(a) participant, the SBA may participate in negotiations.

■ 55. Add section 2419.811 to read as follows:

2419.811 Preparing the contracts.

■ 56. Add section 2419.811–1 to read as follows:

2419.811–1 Sole source.

(e) If the award is to be made under the Partnership Agreement cited in 2419.800, the contracting officer shall prepare the instrument to be awarded to the 8(a) firm in accordance with the normal HUD procedures for non-8(a) contracts, except for the following:

(1) The award form shall cite 41 U.S.C. 253(c)(5) and 15 U.S.C. 637(a) as the authority for use of other than full and open competition.

(2) The contracting officer shall include appropriate contract clauses, as necessary, to reflect that the acquisition is an 8(a) contract awarded under the authority of the Partnership Agreement cited in 2419.800.

(3) The contracting officer shall include SBA's requirement number on the contract unless the acquisition does not exceed the simplified acquisition threshold.

(4) A single award document shall be used between HUD and the 8(a) contractor. As such, no signature on the part of the SBA is required; a single signature by the HUD contracting officer shall suffice. The 8(a) contractor's signature shall be placed on the award document as the prime contractor. The 8(a) contractor's name and address shall be placed in the ''awarded to'' or ''contractor name'' block on the appropriate forms.

■ 57. Add section 2419.811–2 to read as follows:

2419.811–2 Competitive.

(a) If the award is to be made under the Partnership Agreement cited in 2419.800, competitive contracts for 8(a) firms shall be prepared in accordance with the same standards as 8(a) sole-source contracts as set forth in 2419.811–1.

(b) If the acquisition is conducted under the Partnership Agreement cited

in 2419.800, the process for obtaining signatures shall be as specified in 2419.811–1(e).

■ 58. Add section 2419.811–3 to read as follows:

2419.811–3 Contract clauses.

(d)(3) The contracting officer shall use the clause at FAR 52.219–18, ''Notification of Competition Limited to Eligible 8(a) Concerns,'' with the clause at 2452.219–71, ''Notification of Competition Limited to Eligible 8(a) Concerns—Alternate III to FAR 52.219–18,'' for competitive 8(a) acquisitions processed under the Partnership Agreement cited in 2419.800.

(f) In contracts and purchase orders awarded under the Partnership Agreement cited at 2419.800, the contracting officer shall substitute the clause at 2452.219–72, Section 8(a) Direct Award, for the clauses at FAR 52.219–11, ''Special 8(a) Contract Conditions;'' FAR 52.219–12, ''Special 8(a) Subcontract Conditions;'' and FAR 52.219–17, ''Section 8(a) Award.''

■ 59. Add section 2419.812 to read as follows:

2419.812 Contract administration.

(e) Awards under the Partnership Agreement cited in 2419.800 are subject to 15 U.S.C. 637(a)(21). These contracts contain the clause at 2452.219–71, Section 8(a) Direct Award (Deviation), which requires the 8(a) contractor to notify the SBA and the HUD contracting officer when ownership of the firm is being transferred.

PART 2426—OTHER SOCIOECONOMIC PROGRAMS

■ 60. The authority citation for part 2426 is revised to read as follows:

Authority: 40 U.S.C. 121(c); 42 U.S.C. 3535(d).

Subpart 2426.70—Minority Business Enterprises

2426.7001 [Removed and Reserved]

■ 61. Remove and reserve section 2426.7001.

2426.7002 [Removed and Reserved]

■ 62. Remove and reserve section 2426.7002.

PART 2427—PATENTS, DATA, AND COPYRIGHTS

■ 63. The authority citation for part 2427 is revised to read as follows:

Authority: 40 U.S.C. 121(c); 42 U.S.C. 3535(d).

Subpart 2427.3—Patent Rights Under Government Contracts

■ 64. Revise the section heading of section 2427.305–2 to read as follows:

2427.305–2 Administration by the Government.

* * * * *

■ 65. Add subpart 2427.4 to read as follows:

Subpart 2427.4—Rights in Data and Copyrights

2427.470 Contract clause.

The contracting officer shall insert the clause 2452.227–70, Government Information, in all solicitations and contracts when the Government will provide information to the contractor, and/or when the contractor will obtain information on the Government's behalf to perform work required under the contract. The contracting officer shall describe all information to be provided to the contractor in paragraph (d)(1) of the clause.

PART 2428—BONDS AND INSURANCE

■ 66. The authority citation for part 2428 is revised to read as follows:

Authority: 40 U.S.C. 121(c); 42 U.S.C. 3535(d).

Subpart 2428.1—Bonds

■ 67. Revise the heading of section 2428.106 to read as follows:

2428.106 Administration.

* * * * *

PART 2432—CONTRACT FINANCING

■ 68. The authority citation for part 2432 is revised to read as follows:

Authority: 31 U.S.C. 3901–3905; 40 U.S.C. 121(c); 42 U.S.C. 3535(d).

■ 69. Add section 2432.006 before subpart 2432.1 to read as follows:

2432.006 Reduction or suspension of contract payments upon finding of fraud.

■ 70. Add section 2432.006–1 to read as follows:

2432.006–1 General.

The Senior Procurement Executive is the agency head for the purposes of FAR 32.006–1. In accordance with FAR 32.006–1(c), the Senior Procurement Executive may delegate the remedy coordination official duties to personnel in the Office of the Chief Procurement Officer at or above the Level IV of the Executive Service.

■ 71. Add section 2432.006–2 to read as follows:

2432.006–2 Definitions.

''Remedy coordination official'' means the Senior Procurement Executive.

■ 72. Add section 2432.006–3 to read as follows:

2432.006–3 Responsibilities.

(b) HUD personnel shall report immediately in writing when a contractor's request for advance, partial, or progress payments is suspected to be fraudulent. The report shall be made to the contracting officer and the remedy coordination official. The report shall describe the events, acts, and conditions that indicate the apparent or suspected violation and include all pertinent documents. The remedy coordination official will consult with, and refer cases to, the Office of the Inspector General for investigation, as appropriate. If appropriate, the Office of the Inspector General will provide a report to the Senior Procurement Executive.

■ 73. Add section 2432.006–4 to read as follows:

2432.006–4 Procedures.

The Senior Procurement Executive is the agency head for the purposes of FAR 32.006–4.

■ 74. Add section 2432.007 to read as follows:

2432.007 Contract financing payments.

(a) The Senior Procurement Executive is the agency head for the purposes of FAR 32.007(a).

Subpart 2432.7—Contract Funding

■ 75. Add section 2432.703–1 to read as follows:

2432.703–1 General.

(b)(1) Except as described herein, a fixed-price contract may be funded incrementally only if—

(i) Sufficient funds are not available to the Department at the time of contract award or exercise of option to fully fund the contract or option;

(ii) The contract (excluding any options) or any exercised option—

(A) Is for severable services;

(B) Does not exceed one year in length; and

(C) Is incrementally funded using funds available (unexpired) as of the date the funds are obligated; or

(iii) The contract uses funds available from multiple (2 or more) fiscal years and Congress has otherwise authorized incremental funding.

(2) An incrementally funded fixed-price contract shall be fully funded as soon as funds are available.

■ 76. Add section 2432.704 to read as follows:

2432.704 Limitation of cost or funds.

■ 77. Add section 2432.704–70 to read as follows:

2432.704–70 Incrementally funded fixed-price contracts.

(a) Upon receipt of the contractor's notice under paragraph (c) of the clause at 2452.232–72, Limitation of Government's Obligation, the contracting officer shall promptly provide written notice to the contractor that the Government is—

(1) Allotting additional funds for continued performance and increasing the Government's limitation of obligation in a specified amount;

(2) Terminating the affected contract line items (CLINs) or contract, as applicable; or

(3) Considering whether to allot additional funds; and

(i) The contractor is required by the contract terms to stop work when the Government's limitation of obligation is reached; and

(ii) Any costs expended beyond the Government's limitation of obligation are at the contractor's risk.

(b) Upon learning that the contract will receive no further funds, the contracting officer shall promptly give the contractor written notice of the Government's decision and terminate the affected CLINs or contract, as applicable, for the convenience of the Government.

(c) The contracting officer shall ensure that, in accordance with paragraph (b) of the clause at 2452.232–72, ''Limitation of Government's obligation,'' sufficient funds are allotted to the contract to cover the total amount payable to the contractor in the event of termination for the convenience of the Government.

■ 78. Add section 2432.705 to read as follows:

2432.705 Contract clauses.

■ 79. Add section 2432.705–70 to read as follows:

2432.705–70 Clause for limitation of Government's obligation.

The contracting officer shall insert the clause at 2452.232–72, ''Limitation of Government's Obligation,'' in solicitations and resultant incrementally funded fixed-price contracts as authorized by 2432.703–1. The contracting officer shall insert the information required in the table in paragraph (b) and the notification period in paragraph (c) of the clause.

Subpart 2432.9—Prompt Payment

■ 80. Revise section 2432.903 to read as follows:

2432.903 Policy.

(a) The Senior Procurement Executive is the agency head's designee for the purposes of FAR 32.903(a).

■ 81. Revise section 2432.906 to read as follows:

2432.906 Making payments.

(a) *General.* The authority to make the determination prescribed in FAR 32.906(a) is delegated to the HCA. Before making this determination, the HCA shall consult with the appropriate payment office to ensure that procedures are in place to permit timely payment.

■ 82. In 2432.908, redesignate paragraphs (c)(1) through (3) as (c)(2) through (4), respectively; add new paragraph (c)(1); and revise newly redesignated paragraphs (c)(2) through (c)(4).

The addition and revisions read as follows:

2432.908 Contract clauses.

(c) * * *

(1) The contracting officer shall insert the clause at 2452.232–73, Constructive Acceptance Period, in solicitations and contracts when the contracting officer has determined that an acceptance period longer than the 7 days provided for in the FAR clause at 52.232–25, ''Prompt Payment,'' is needed.

(2) The contracting officer shall insert a clause substantially the same as provided at 2452.232–70, Payment Schedule and Invoice Submission (Fixed-price), in fixed-price contracts other than performance-based contracts under which performance-based payments will be used.

(3) The contracting officer shall insert a clause substantially the same as provided at 2452.232–71, Voucher Submission, in all cost-reimbursement, time-and-materials, and labor-hour type solicitations and contracts. The contracting officer shall insert the billing period agreed upon with the contractor (see also the FAR clause at 52.216–7, ''Allowable Cost and Payment'').

(4) The Contracting Officer may substitute appropriate language for the clauses in paragraph (c)(2) and (3) of this clause when payment under the contract will be made on the basis of other than the submission of an invoice or voucher; e.g., directly from proceeds of property sales.

PART 2437—SERVICE CONTRACTING

■ 83. The authority citation for part 2437 is revised to read as follows:

Authority: 40 U.S.C. 121(c); 42 U.S.C. 3535(d).

Subpart 2437.1—Service Contracts—General

■ 84. Revise section 2437.110 to read as follows:

2437.110 Solicitation provisions and contract clauses.

(e)(1) The Contracting Officer shall insert the clause at 2452.237–70, Key Personnel, in solicitations and contracts when it is necessary for contract performance to identify Contractor Key personnel.

(2) The Contracting Officer shall insert the clause at 2452.237–73, Conduct of Work and Technical Guidance, in all solicitations contracts for services other than commercial services awarded pursuant to FAR part 12.

(3) The contracting officer shall insert the clause at 2452.237–75, Access to HUD Facilities, in all solicitations and contracts when contractor employees, including subcontractors and consultants, will be required to regularly work in or have access to any HUD facilities (as distinct from nongovernment employee visitors to government facilities).

(4) The Contracting Officer shall insert the clause at 2452.237–77, Temporary Closure of HUD Facilities, in all solicitations and contracts where contractor personnel will be working on-site in any HUD office.

PART 2439—ACQUISITION OF INFORMATION TECHNOLOGY

■ 85. The authority citation for part 2439 is revised to read as follows:

Authority: 40 U.S.C. 121(c); 42 U.S.C. 3535(d).

Subpart 2439.1—General

■ 86. In section 2439.107, revise paragraph (a) to read as follows:

2439.107 Contract clauses.

(a) The contracting officer shall insert the clause at 2452.239–70, Access to HUD Systems, in solicitations and contracts when the contract will require contractor employees, including subcontractors and consultants, to have access to any HUD information system(s) as defined in the clause.

* * * * *

PART 2442—CONTRACT ADMINISTRATION AND AUDIT SERVICES

■ 87. The authority citation for part 2442 is revised to read as follows:

Authority: 40 U.S.C. 121(c); 42 U.S.C. 3535(d).

■ 88. The heading for part 2442 is revised to read as set forth above.

■ 89. Add subpart 2442.3 to read as follows:

Subpart 2442.3—Contract Administration Office Functions

2442.302–70 Contract clause.

The contracting officer shall include clause 2452.242–72, Post-award Orientation Conference, in solicitations and contracts when the contractor will be required to attend a post-award orientation conference. The contracting officer shall indicate whether the contractor must attend the conference in person or via electronic communication.

PART 2452—SOLICITATION PROVISIONS AND CONTRACT CLAUSES

■ 90. The authority citation for part 2452 is revised to read as follows:

Authority: 40 U.S.C. 121(c); 42 U.S.C. 3535(d).

■ 91. Add section 2452.204–70 to read as follows:

2452.204–70 Preservation of, and access to, contract records (tangible and electronically stored information (ESI) formats).

As prescribed in 2404.7001, insert the following clause:

PRESERVATION OF, AND ACCESS TO, CONTRACT RECORDS (TANGIBLE AND ELECTRONICALLY STORED INFORMATION (ESI) FORMATS) (DEC 2012)

(a) For the purposes of this clause—

Contract records means information created or maintained by the contractor in the performance of the contract. Contract records include documents required to be retained in accordance with FAR 4.703 and other information generated or maintained by the contractor that is pertinent to the contract and its performance including, but not limited to: email and attachments, formal and informal correspondence, calendars, notes, reports, memoranda, spreadsheets, tables, telephone logs, forms, survey, books, papers, photographs, drawings, machine-readable materials, and data. Contract records may be maintained as electronically stored information or as tangible materials. Contract records may exist in either final or any interim version (*e.g.,* drafts that have been circulated for official purposes and contain unique information, such as notes, edits, comments, or highlighting). Contract records may be located or stored on the contractor's premises or at off-site locations.

Electronically stored information (ESI) means any contract records that are stored on, or generated by, an electronic device, or contained in electronically accessible media, either owned by the contractor, subcontractor(s), or employees of the contractor or subcontractor(s) regardless of the physical location of the device or media (*e.g.,* offsite servers or data storage).

ESI devices and media include, but are not be limited to:

(1) Computers (mainframe, desktop, and laptop);

(2) Network servers, including shared and personal drives;

(3) Individual email accounts of the contractor's principals, officers, and employees, including all folders contained in each email account such as ''inbox,'' ''outbox,'' ''drafts,'' ''sent,'' ''trash,'' ''archive,'' and any other folders;

(4) Personal data assistants (PDAs);

(5) External data storage devices including portable devices (*e.g.,* flash drive); and

(6) Data storage media (magnetic, *e.g.,* tape; optical, *e.g.,* compact disc, microfilm, etc.).

Tangible materials means contract records that exist in a physical (*i.e.,* non-electronic) state.

(b) If during the period of performance of this contract, HUD becomes, or anticipates becoming, a party to any litigation concerning matters related to records maintained or generated by the Contractor in the performance of this contract, the Contracting Officer may provide the contractor with a written (either hardcopy or email) preservation hold notice and certification of compliance with the preservation hold notice. Upon receipt of the hold notice, the Contractor shall immediately take the following actions—

(1) Discontinue any alteration, overwriting, deletion, or destruction of all tangible materials and ESI.

(2) Preserve tangible materials and ESI. The contractor shall preserve ESI in its ''native'' form to preserve metadata (*i.e.,* creation and modification history of a document).

(3) Identify all individuals who possess or may possess tangible materials and ESI related to this matter, including contractor employees, subcontractors, and subcontractor employees. The contractor shall provide the names of all such individuals via email to the HUD official indicated in the notice.

(4) Document in writing the contractor's efforts to preserve tangible materials and ESI. It may be useful to maintain a log documenting preservation efforts.

(5) Complete the certification of compliance with the preservation hold notice upon receipt and return it to the identified contact person; and

(6) Upon the request of the Contracting Officer, provide the Contracting Officer or other HUD official designated by the Contracting Officer with any of the information described in this clause. The contractor shall immediately confirm receipt of such request. The contractor shall describe in detail any records that the contractor knows or believes to be unavailable and provide a detailed explanation of why they are unavailable, and if known, their location.

(c)(1) If any request for records pursuant to paragraph (b)(6) of this clause causes an increase in the estimated cost or price or the time required for performance of any part of the work under this contract, or otherwise affects any other terms and conditions of this contract, the Contracting Officer shall make an equitable adjustment in the contract price, the delivery schedule, or both, and shall modify the contract.

(2) The Contractor must assert its right to an adjustment under this clause within __ [*Contracting Officer insert period; 30 days if no other period inserted*] from the date of receipt of the Contracting Officer's request made pursuant to paragraph (b)(6) of this clause. However, if the Contracting Officer decides that the facts justify it, the Contracting Officer may receive and act upon a request submitted before final payment of the contract.

(3) Failure to agree to any adjustment shall be a dispute under the ''Disputes'' clause of this contract. However, nothing in this clause shall excuse the contractor from providing the records requested by the Contracting Officer.

(e) The Contractor shall include this clause in all subcontracts.

(End of clause)

Alternate I (DEC 2012)

For cost-reimbursement type contracts, substitute the following paragraph (c)(1) for paragraph (c)(1) of the basic clause:

(c)(1) If any request for records pursuant to paragraph (b)(6) of this clause causes an increase in the estimated cost or price or the time required for performance of any part of the work under this contract, or otherwise affects any other terms and conditions of this contract, the Contracting Officer shall make an equitable adjustment in any one of the following and modify the contract accordingly—

(i) Estimated cost;

(ii) Delivery or completion schedule, or both; (ii) Amount of any fixed fee; or

(iii) Other affected terms.

Alternate II (DEC 2012)

For labor-hour or time-and-materials type contracts, substitute the following paragraph (c)(1) for paragraph (c)(1) of the basic clause:

(c)(1) If any request for records pursuant to paragraph (b)(6) of this clause causes an increase in the estimated cost or price or the time required for performance of any part of the work under this contract, or otherwise affects any other terms and conditions of this contract, the Contracting Officer shall make an equitable adjustment in any one or more of the following and will modify the contract accordingly:

(i) Ceiling price;

(ii) Hourly rates;

(iii) Delivery schedule; or

(iv) Other affected terms.

■ 92. In section 2452.215–70, add Alternate III immediately following Alternate II, to read as follows:

2452.215–70 Proposal content.

* * * * *

Alternate III (DEC 2012)

As prescribed in 2415.209(a), add the following paragraph (e) when the size of Part I, Technical and Management, offers will be limited:

(e) Size limit of Part I, Technical and Management.

(1) Offerors shall limit Part I, Technical and Management, of their initial offers to __ [*Contracting Officer insert number*] pages, except for the information specifically exempted in paragraph (e)(3) of this clause. Offerors are cautioned that if Part I of their offers exceeds this limit, the Government will evaluate only the information contained in the pages up through the permitted number. Pages beyond that limit will not be evaluated.

(2) A page shall consist of one side of a single sheet of 8½″ × 11″ paper, single spaced, using not smaller than 12 point type font, and having margins at the top, bottom, and sides of the page of no less than one inch in width.

(3) The following information is exempt from the limitation set forth in paragraph (1): [*Contracting Officer list exemptions or enter ''None''*].

(4) Offerors are encouraged to use recycled paper and to use both sides of the paper (see the FAR clause at 52.204–4).

■ 93. Add section 2452.215–71 to read as follows:

2452.215–71 Relative importance of technical evaluation factors to cost or price.

As prescribed in 2415.209(a)(2), insert the following provision:

RELATIVE IMPORTANCE OF TECHNICAL EVALUATION FACTORS TO COST OR PRICE (DEC 2012)

For the purposes of evaluating offers and the selection of the contractor or contractors under this solicitation, the relative merit of the offeror's technical proposal as evaluated in accordance with the technical evaluation factors listed herein shall be considered [*Contracting Officer insert one of the following:* ''significantly more important than,'' ''approximately equal to,'' or ''significantly less important than''] cost or price. While the proposed cost or price will not be assigned a specific weight, it shall be considered a significant criterion in the overall evaluation of proposals.

■ 94. Add section 2452.215–72 to read as follows:

2452.215–72 Evaluation of small business participation.

As prescribed in 2415.370, insert the following provision:

EVALUATION OF SMALL BUSINESS PARTICIPATION (DEC 2012)

(a) In addition to the technical and management evaluation factors set forth in this solicitation, the Government will evaluate the extent to which all offerors identify and commit to using small businesses in the performance of the contract, whether through joint ventures or teaming arrangements, or as subcontractors. The evaluation shall consider the following:

(1) The extent to which small businesses are specifically identified in proposals;

(2) The extent of commitment to use small businesses (for example, enforceable commitments will be weighted more heavily than non-enforceable ones);

(3) The complexity and variety of the work small businesses are to perform;

(4) The realism of the proposal;

(5) Past performance of the offerors (other than small businesses) in complying with requirements of the clauses at FAR 52.219–8, Utilization of Small Business Concerns, and 52.219–9, Small Business Subcontracting Plan; and

(6) The extent of participation of small businesses in terms of the total value of the contract.

(b) Offerors that are required to submit a subcontracting plan pursuant to the clause at FAR 52.219–9 shall include the small businesses proposed as subcontractors for evaluation under this provision in their subcontracting plan.

(End of Provision)

■ 95. Revise section 2452.216–76 to read as follows:

2452.216–76 Minimum and maximum quantities or amounts for order.

As prescribed in 2416.506–70(b), insert the following clause:

MINIMUM AND MAXIMUM QUANTITIES OR AMOUNTS FOR ORDER (DEC 2012)

(a) The minimum quantity or amount to be ordered under this contract shall not be less than [*contracting officer insert quantity or amount*].

(b) The maximum quantity or amount to be ordered under this contract shall not exceed [*contracting officer insert quantity or amount*].

(End of clause)

■ 96. Add section 2452.216–79 to read as follows:

2452.216–79 Estimated cost (no fee).

As prescribed in 2416.307(b), insert the following clause:

ESTIMATED COST (NO FEE) (DEC 2012)

(a) It is estimated that the total reimbursable cost to the Government for full performance of this contract will be $__ [*Contracting Officer insert amount*].

(b) If this contract is incrementally funded, the following shall apply:

(1) Total funds currently available for payment and allotted to this contract are $__ [*Contracting Officer insert amount*] (see also the clause at FAR 52.232–22, ''Limitation of Funds'' herein).

(2) If and when the contract is fully funded, as specified in paragraph (a) of this clause, the clause at FAR 52.232–20, Limitation of Cost, herein, shall become applicable.

(3) The Contracting Officer may allot additional funds to the contract up to the total specified in paragraph (a) of this clause without the concurrence of the contractor.

(End of clause)

■ 97. Add section 2452.216–80 to read as follows:

2452.216–80 Estimated cost and fixed-fee.

As prescribed in 2416.307(b), insert the following clause:

ESTIMATED COST AND FIXED-FEE (DEC 2012)

(a) It is estimated that the total cost to the Government for full performance of this contract will be $__ [*Contracting Officer insert amount*], of which $__ [*Contracting Officer insert amount*] represents the estimated reimbursable costs, and $__ [*Contracting Officer insert amount*] represents the fixed fee.

(b) If this contract is incrementally funded, the following shall apply:

(1) Total funds currently available for payment and allotted to this contract are $__ [*Contracting Officer insert amount*], of which __ [*Contracting Officer insert amount*] represents the limitation for reimbursable costs and $ __ [*Contracting Officer insert amount*] represents the prorated amount of the fixed fee (see also the clause at FAR 52.232–22, ''Limitation of Funds'' herein).

(2) If and when the contract is fully funded, as specified in paragraph (a) of this clause, the clause at FAR 52.232–20, ''Limitation of Cost,'' herein, shall become applicable.

(3) The Contracting Officer may allot additional funds to the contract up to the total specified in paragraph (a) of this clause without the concurrence of the contractor.

(End of clause)

■ 98. Add section 2452.219–71 to read as follows:

2452.219–71 Notification of competition limited to eligible 8(a) concerns—Alternate III to FAR 52.219–18.

As prescribed in 2419.811–3(d)(3), insert the following clause:

NOTIFICATION OF COMPETITION LIMITED TO ELIGIBLE 8(a) CONCERNS—ALTERNATE III TO FAR 5219–18 (DEC 2012)

The following paragraph (c) replaces paragraph (c) of the clause at FAR 52.219–18, Notification of Competition Limited to Eligible 8(a) Concerns:

(c) Any award resulting from this solicitation will be made directly by the HUD

Contracting Officer to the successful 8(a) offeror selected through the evaluation criteria set forth in this solicitation.

■ 99. Add section 2452.219–72 to read as follows:

2452.219–72 Section 8(a) direct awards (Deviation).

As prescribed in 2419.811–3(f), insert the following clause:

SECTION 8(A) DIRECT AWARD (DEC 2012)

(a) This contract is issued as a direct award between the Department of Housing and Urban Development (HUD) and the 8(a) Contractor pursuant to a Partnership Agreement (Agreement) between the Small Business Administration (SBA) and HUD. The SBA retains responsibility for 8(a) certification, 8(a) eligibility determinations and related issues, and providing counseling and assistance to the 8(a) contractor under the 8(a) program. The cognizant SBA district office is: [*To be completed by Contracting Officer at time of award*].

(b) SBA is the prime contractor and __ [*insert name of 8(a) contactor*] is the subcontractor under this contract. Under the terms of the Agreement, HUD is responsible for administering the contract and taking any action on behalf of the Government under the terms and conditions of the contract. However, the HUD Contracting Officer shall give advance notice to the SBA before issuing a final notice terminating performance, either in whole or in part, under the contract. The HUD Contracting Officer shall also coordinate with SBA prior to processing any novation agreement. HUD may assign contract administration functions to a contract administration office.

(c) __ [*insert name of 8(a) contractor*] agrees:

(1) To notify the HUD Contracting Officer, simultaneously with its notification to SBA (as required by SBA's 8(a) regulations), when the owner or owners upon whom 8(a) eligibility is based, plan to relinquish ownership or control of the concern. Consistent with 15 U.S.C. 637(a)(21), transfer of ownership or control shall result in termination of the contract for convenience, unless SBA waives the requirement for termination prior to the actual relinquishing of ownership or control.

(2) To adhere to the requirements of FAR 52.219–14, ''Limitations on Subcontracting.''

(End of Clause)

■ 100. Add section 2452.219–73 to read as follows:

2452.219–73 Incorporation of subcontracting plan.

As prescribed in 2419.708(b), insert the following clause:

INCOPORATION OF SUBCONTRACTING PLAN (DEC 2012)

The Contractor's approved subcontracting plan, dated __ [*Contracting Officer insert date*] is hereby incorporated by reference and made a part of this contract.

(End of clause)

■ 101. Add section 2452.219–74 to read as follows:

2452.219–74 Small business subcontracting goals.

As prescribed in 2419.708(b), insert the following provision:

SMALL BUSINESS SUBCONTRACTING GOALS (DEC 2012)

(a) This provision does not apply to offerors that are small businesses.

(b) The offeror's attention is directed to the FAR clause at 52.219–9, ''Small Business Subcontracting Plan,'' herein. HUD will evaluate proposed subcontracting plans using the Departmental small business subcontracting goals set forth in paragraph (c) of this clause. Offerors that are unable to propose subcontracting that meets HUD's established goals must provide the rationale for their proposed level of subcontracting.

(c) HUD's subcontracting goals are as follows:

(i) Small Business—__% [*Contracting Officer insert HUD small business subcontracting goal percentage*]

(ii) The total Small Business goal shown in paragraph (c)(i) of this clause contains the following subordinate goals [*Contracting Officer insert percentages*]:

(A) Small Disadvantaged Business—__%

(B) Women-Owned Small Business—__%

(C) Service-Disabled Veteran-Owned Small Business—__%

(D) HUBZone Small Business—__%

(End of Provision)

■ 102. Add section 2452.227–70 to read as follows:

2452.227–70 Government information.

As prescribed in 2427.470, use the following clause:

GOVERNMENT INFORMATION (DEC 2012)

(a) *Definitions.* As used in this clause, ''Government information'' includes—

Contractor-acquired information, which means information acquired or otherwise collected by the Contractor on behalf of the Government in the context of the Contractor's duties under the contract.

Government-furnished information (GFI), which means information in the possession of, or directly acquired by, the Government and subsequently furnished to the Contractor for performance of a contract. GFI also includes contractor-acquired information if the contractor-acquired information is a deliverable under the contract and is for continued use under the contract. Otherwise, GFI does not include information that is created by the Contractor and delivered to the Government in accordance with the requirements of the work statement or specifications of the contract. The type, quantity, quality, and delivery requirements of such deliverable information are set forth elsewhere in the contract schedule.

(b) *Information Management and Information Security.*

(1) The Contractor shall manage, account for, and secure all Government information provided or acquired by the contractor. The Contractor shall be responsible for all Government information provided to its subcontractors. The Contractor agrees to include a requirement in each subcontract under this contract that flows down the protection from disclosure requirements.

(2) The Contractor's responsibility for Government information extends from the initial provision or acquisition and receipt of information, through stewardship, custody, and use until returned to, or otherwise disposed of, as directed by the Contracting Officer. This requirement applies to all Government information under the Contractor's accountability, stewardship, possession or control, including its subcontractors.

(c) *Use of Government information.* (1) The Contractor shall not use any information provided or acquired under this contract for any purpose other than in the performance of this contract.

(2) The Contractor shall not modify or alter the Government information, unless authorized in writing, in advance, by the Contracting Officer.

(d) *Government-furnished information.* (1) The Government shall deliver to the Contractor the information described below—

Description *Date to be Provided*
[*Contracting Officer insert*]

(2) The delivery and/or performance dates specified in this contract are based upon the expectation that the Government-furnished information will be suitable for contract performance and will be delivered to the Contractor by the dates stated in paragraph (d)(1) of this clause.

(i) The Government does not warrant the validity or accuracy of the Government-furnished information unless otherwise noted.

(ii) In the event that information received by the Contractor is not in a condition suitable for its intended use, the Contractor shall immediately notify the Contracting Officer in writing. Upon receipt of the Contractor's notification, the Contracting Officer shall advise the Contractor on a course of action to remedy the problem.

(iii) If either the failure of the Government to provide information to the Contractor by the dates shown in this clause or the remedial action taken under this clause to correct defective information causes an increase or decrease in the Contractor's cost of, or the time required for, the performance of any part of the work under this contract, the Contracting Officer shall consider an equitable adjustment to the contract. The Contractor shall provide to the Contracting Officer its written statement describing the general nature and amount of the equitable adjustment proposal within 30 days after the remedial action described in paragraph (ii) herein is completed, or within 30 days after the date upon which the Government failed to provide information, unless the Contracting Officer extends this period.

(3)(i) The Contracting Officer may, by written notice, at any time—

(A) Increase or decrease the amount of Government-furnished information under this contract;

(B) Substitute other Government-furnished information for the information previously furnished, to be furnished, or to be acquired by the Contractor for the Government under this contract; or

(C) Withdraw authority to use the information.

(ii) Upon completion of any action(s) under paragraph (d)(3)(i) of this clause, and the Contractor's timely written request, the Contracting Officer shall consider an equitable adjustment to the contract.

(e) *Rights in information.* Government information is the property of the U.S. Government unless otherwise specifically identified. The specific rights in any other information acquired or created by the Contractor under this contract shall be as expressed in the ''*Rights in Data*'' clause contained in this contract.

(f) *Government access to information.* The Government shall have the right to access any Government information maintained by the contractor and any subcontractors. The Contractor shall provide the Contracting Officer, and other duly authorized Government representatives, with access to all Government information, including access to the Contractor's facilities, as necessary, promptly upon written notification by the Contracting Officer. Such notification may be by electronic mail.

(g) *Contractor liability for Government information.* (1) Unless otherwise provided for in the contract, the Contractor shall not be liable for loss, theft, damage, or destruction to the Government information furnished or acquired under this contract, except when the loss, theft, damage, or destruction is the result of the Contractor's failure to properly manage, account for, and safeguard the information in accordance with this clause.

(2) In the event of any loss, theft, damage, or destruction of Government information, the Contractor shall immediately take all reasonable actions necessary to protect the Government information from further loss, theft, damage, or destruction.

(3) The Contractor shall do nothing to prejudice the Government's rights to recover against third parties for any loss, theft, damage, or destruction of Government information.

(h) *Information alteration and disposal.* Except as otherwise provided for in this contract, the Contractor shall not alter, destroy, or otherwise dispose of any Government information unless expressly directed by the Contracting Officer to do so.

(i) *Return of Government information to the Government.* (1) The Government may require the Contractor to return Government Information to the Government at any time. Upon demand by the Contracting Officer or his/her representative, the Contractor shall return all Government information to the Government as directed by the Contracting Officer or other individual designated by the Contracting Officer.

(2) The Contractor's failure to return all information as directed, including directions regarding the time frames for delivery back to the Government and directions prescribing the form in which the data must be returned, shall be considered a breach of contract, and the Government shall have the right to physically remove the Government information from the Contractor, including removal of such information from the Contractor's physical premises and from any electronic media (e.g., Contractor's computer systems).

(3) When required to return Government information to the Government, the Contractor shall do so at no cost to the Government. The Government shall not be responsible for the cost of data format conversion and the cost of delivery, if any.

(4) The Contractor shall ensure that all Government information provided to subcontractors is returned to the Government.

(j) *Equitable adjustment.* Equitable adjustments under this clause shall be made in accordance with the procedures of the Changes clause. However, the Government shall not be liable for breach of contract for the following:

(1) Any delay in delivery of Government-furnished information.

(2) Delivery of Government-furnished information in a condition not suitable for its intended use.

(3) An increase, decrease, or substitution of Government-furnished information.

(4) Failure to correct or replace Government information for which the Government is responsible.

(k) Subcontracts. The Contractor shall ensure that all subcontracts under which Government information is provided to a subcontractor include the basic terms and conditions set forth in paragraphs (a), (b), (c), (f), and (h) of this clause in each subcontract. Subcontracts shall clearly describe the Government information provided to the subcontractor. The Contractor shall be responsible for all Government information provided to subcontractors.

Alternate I. When the contracting officer determines that the failure to return Government information as provided for in paragraph (i) of this clause shall result in a monetary damage to the Government, the contracting officer shall include the following additional paragraph (i)(5) of this clause. The contracting officer shall consult the requiring activity to determine an amount or percentage that accurately reflects the damages to the Government.

(5) In the event of Contractor delay in returning the Government Information to the Government, for each calendar day late, the Contracting Officer has the discretion to deduct ___ [*Contracting Officer insert dollar amount or percentage*] from the total value of the contract, and/or withhold payment from the Contractor.

(End of clause)

■ 103. Revise section 2452.232–70 to read as follows:

2452.232–70 Payment schedule and invoice submission (Fixed-price).

As prescribed in 2432.908(c)(1), insert the following clause in all fixed-price solicitations and contracts:

PAYMENT SCHEDULE AND INVOICE SUBMISSION (FIXED–PRICE) (DEC 2012)

(a) *Payment Schedule.* Payment of the contract price (see Section B of the contract) will be made upon completion and acceptance of all work unless a partial payment schedule is included below [*Contracting Officer insert schedule information*]:

Partial payment number	Applicable contract deliverable	Delivery date	Payment amount
1.	.....	.....	.....
2.	.....	.....	.....
3.	.....	.....	.....

[*Continue as necessary*]

(b) *Submission of Invoices.* (1) The Contractor shall submit invoices as follows: original to the payment office and one copy each to the Contracting Officer and a copy to the Government Technical Representative (GTR) identified in the contract. To constitute a proper invoice, the invoice must include all items required by the FAR clause at 52.232–25, ''Prompt Payment.''

(2) To assist the government in making timely payments, the contractor is also requested to include on each invoice the appropriation number shown on the contract award document (*e.g.,* block 14 of the Standard Form (SF) 26, block 21 of the SF–33, or block 25 of the SF–1449). The contractor is also requested to clearly indicate on the mailing envelope that an invoice is enclosed.

(c) *Contractor Remittance Information.* The contractor shall provide the payment office with all information required by other payment clauses or other supplemental

information (e.g., contracts for commercial services) contained in this contract.

(d) *Final Invoice Payment.* The final invoice shall not be paid prior to certification by the Contracting Officer that all work has been completed and accepted.

(End of clause)

■ 104. Revise section 2452.232–71 to read as follows:

2452.232–71 Voucher submission.

As prescribed in 2432.908(c)(3), insert the following clause in all cost-reimbursement, time-and-materials, and labor-hour solicitations and contracts:

VOUCHER SUBMISSION (DEC 2012)

(a) *Voucher Submission.*

(1) The contractor shall submit, ____ [*Contracting Officer insert billing period, e.g., monthly*], an original and two copies of each voucher. In addition to the items required by the clause at FAR 52.232–25, *Prompt Payment,* the voucher shall show the elements of cost for the billing period and the cumulative costs to date. The Contractor shall submit all vouchers, except for the final voucher, as follows: original to the payment office and one copy each to the Contracting Officer and the Government Technical Representative (GTR) identified in the contract. The contractor shall submit all copies of the final voucher to the Contracting Officer.

(2) To assist the government in making timely payments, the contractor is requested to include on each voucher the applicable appropriation number(s) shown on the award or subsequent modification document (e.g., block 14 of the Standard Form (SF) 26, or block 21 of the SF–33). The contractor is also requested to clearly indicate on the mailing envelope that a payment voucher is enclosed.

(b) *Contractor Remittance Information.* (1) The Contractor shall provide the payment office with all information required by other payment clauses contained in this contract.

(2) For time-and-materials and labor-hour contracts, the Contractor shall aggregate vouchered costs by the individual task for which the costs were incurred and clearly identify the task or job.

(c) *Final Payment.* The final payment shall not be made until the Contracting Officer has certified that the contractor has complied with all terms of the contract.

(End of clause)

■ 105. Add section 2452.232–72 to read as follows:

2452.232–72 Limitation of Government's obligation.

As prescribed in 2432.705–70, use the following clause:

LIMITATION OF GOVERNMENT'S OBLIGATION (DEC 2012)

(a) Funds are not available for full funding of all contract line items under this contract. The incrementally funded line items and their anticipated funding schedule are as follows:

Contract line item number	Total price	Amount of current funding	Anticipated date(s) of future funding

The contracting officer will revise this table as funds are allotted to the contract.

(b) For the incrementally funded line item(s) in paragraph (a) of this clause, the Contractor agrees to perform up to the point at which the total amount payable by the Government, including reimbursement in the event of termination of those item(s) for the Government's convenience, approximates the total amount currently allotted to the contract for these contract line items. The Contractor is not authorized to continue work on the incrementally funded line item(s) beyond that point. The Government will in no event be obligated to reimburse the Contractor in excess of the amount allotted to the contract for the incrementally funded line item(s) regardless of anything to the contrary in the clause entitled ''*Termination for Convenience of the Government.*'' As used in this clause, the total amount payable by the Government in the event of termination for convenience of applicable line item(s) includes costs, profit, and estimated termination settlement costs for those line item(s).

(c) Notwithstanding the dates specified in the allotment schedule in paragraph (a) of this clause, the Contractor will notify the Contracting Officer in writing at least ____ [*90 days unless the Contracting Officer inserts a different number*] days prior to the date when, in the Contractor's best judgment, the work will reach the point at which the total amount payable by the Government, including any cost for termination for convenience, will approximate 85 percent of the total amount then allotted to the contract for performance of the applicable line item(s). This notification will state: the estimated date when that point will be reached; and an estimate of the amount of additional funding, if any, needed to continue performance of the applicable line items up to the next scheduled date for allotment of funds identified in paragraph (a) of this clause (or to another mutually agreed-upon date). The notification will also advise the Contracting Officer of the estimated amount of additional funds that will be required for the timely performance of the line item(s) funded pursuant to this clause, for a subsequent period as may be specified in the allotment schedule in paragraph (a) of this clause or otherwise agreed to by the parties. If after such notification additional funds are not allotted by the date identified in the Contractor's notification, or by an agreed-upon date, the Contracting Officer will terminate any line item(s) for which additional funds have not been allotted, pursuant to the clause of this contract entitled ''*Termination for Convenience of the Government.*''

(d) When additional funds are allotted for continued performance of the incrementally funded line item(s), the parties will agree to the period of contract performance covered by the funds. The provisions of paragraphs (b) through (d) of this clause will apply in like manner to the additional allotted funds and agreed-upon date(s), and the contract will be modified accordingly.

(e) If the Contractor incurs additional costs or is delayed in the performance of the work under this contract solely by reason of the failure of the Government to allot additional funds in amounts sufficient for timely performance of the incrementally funded line item(s), and then additional funds are allotted, an equitable adjustment will be made in the line item price(s) or in the time of delivery, or both. Failure to agree to any such equitable adjustment hereunder shall be considered a dispute subject to the ''*Disputes*'' clause in this contract.

(f) The Government may allot additional funds for the performance of the incrementally-funded line item(s) at any time prior to termination.

(g) The termination provisions of this clause do not limit the rights of the Government under the clause entitled ''*Default.*'' The provisions of this clause are limited to the work and allotment of funds for the incrementally funded line item(s) and will no longer apply once the contract is fully funded except with regard to the rights or obligations of the parties concerning equitable adjustments negotiated under paragraphs (d) and (e) of this clause.

(h) Nothing in this clause affects the right of the Government to terminate this contract pursuant to the clause of this contract entitled ''*Termination for Convenience of the Government.*''

(i) Nothing in this clause shall be construed as authorization of voluntary services whose acceptance is otherwise prohibited under 31 U.S.C. 1342.

(End of clause)

■ 106. Add section 2452.232–73 to read as follows:

2452.232–73 Constructive acceptance period.

As prescribed in 2432.908, insert the following clause:

CONSTRUCTIVE ACCEPTANCE PERIOD (DEC 2012)

As authorized by FAR 32.908(c)(1), the constructive acceptance period in paragraph (a)(5)(i) of the clause at FAR 52.232–25, ''Prompt Payment,'' under this contract is ____ [*Contracting Officer insert number*] calendar days.

(End of clause)

■ 107. In section 2452.237–70, revise the introductory text to read as follows:

2452.237–70 Key personnel.

As prescribed in 2437.110(e)(1), insert the following clause in solicitations and contracts when it is necessary for contract performance to identify the contractor's key personnel:

* * * * *

2452.237–72 [Redesignated as 2452.201–70]

■ 108. Redesignate section 2452.237–72 as 2452.201–70, and revise the introductory text to read as follows:

2452.201–70 Coordination of data collection activities.

As prescribed in 2401.106–70, insert the following clause in solicitations and contracts where the contractor is required to collect identical information from ten or more public respondents:

* * * * *

■ 109. In section 2452.237–73, revise the introductory text and paragraph (a) to read as follows:

2452.237–73 Conduct of work and technical guidance.

As prescribed in 2437.110(e)(2), insert the following clause in all contracts for services:

CONDUCT OF WORK AND TECHNICAL GUIDANCE (DEC 2012)

(a) The Contracting Officer will provide the contractor with the name and contact information of the Government Technical Representative (GTR) assigned to this contract. The GTR will serve as the contractor's liaison with the Contracting Officer with regard to the conduct of work. The Contracting Officer will notify the contractor in writing of any change to the current GTR's status or the designation of a successor GTR.

* * * * *

■ 110. Revise section 2452.237–75 to read as follows:

2452.237–75 Access to HUD facilities.

As prescribed in 2437.110(e)(3), insert the following clause in solicitations and contracts:

ACCESS TO HUD FACILITIES (DEC 2012)

(a) *Definitions.* As used in this clause—

Access means physical entry into and, to the extent authorized, mobility within a Government facility.

Contractor employee means an employee of the prime contractor or of any subcontractor, affiliate, partner, joint venture, or team members with which the contractor is associated. It also includes consultants engaged by any of those entities.

Facility and *Government facility* mean buildings, including areas within buildings that are owned, leased, shared, occupied, or otherwise controlled by the Federal Government.

NACI means National Agency Check with Inquiries, the minimum background investigation prescribed by the U.S. Office of Personnel Management.

PIV Card means the Personal Identity Verification (PIV) Card, the Federal Government-issued identification credential (identification badge).

(b) *General.* The performance of this contract requires contractor employees to have access to HUD facilities. All such employees who do not already possess a current PIV Card acceptable to HUD shall be required to provide personal background information, undergo a background investigation (NACI or other OPM-required or approved investigation), including an FBI National Criminal History Fingerprint Check, and obtain a PIV Card prior to being permitted access to any such facility in performance of this contract. HUD may accept a PIV Card issued by another Federal Government agency but shall not be required to do so. No contractor employee will be permitted access to a HUD facility without a proper PIV Card.

(c) *Background information.* (1) For each contractor employee subject to the requirements of this clause and not in possession of a current PIV Card acceptable to HUD, the contractor shall submit the following properly completed forms: Standard Form (SF) 85, ''Questionnaire for Non-sensitive Positions,'' FD 258 (Fingerprint Chart), and a partial Optional Form (OF) 306 (Items 1, 2, 6, 8–13, 16, and 17). The SF–85 and OF–306 are available from the OPM Web site, *http://www.opm.gov.* The GTR will provide all other forms that are not obtainable via the Internet.

(2) The contractor shall deliver the forms and information required in paragraph (c)(1) of this clause to the GTR.

(3) The information provided in accordance with paragraph (c)(1) of this clause will be used to perform a background investigation to determine the suitability of the contractor employees to have access to Government facilities. After completion of the investigation, the GTR will notify the contractor in writing when any contractor employee is determined to be unsuitable for access to a Government facility. The contractor shall immediately remove such employee(s) from work on this contract that requires physical presence in a Government facility.

(4) Affected contractor employees who have had a federal background investigation without a subsequent break in federal employment or federal contract service exceeding 2 years may be exempt from the investigation requirements of this clause subject to verification of the previous investigation. For each such employee, the contractor shall submit the following information in lieu of the forms and information listed in paragraph (c)(1) of this clause: Employee's full name, Social Security Number, and place and date of birth.

(d) *PIV Cards.* (1) HUD will issue a PIV Card to each contractor employee who is to be given access to HUD facilities and who does not already possess a PIV Card acceptable to HUD (see paragraph (b) of this clause). HUD will not issue the PIV Card until the contractor employee has successfully cleared the FBI National Criminal History Fingerprint Check and HUD has initiated the background investigation for the contractor employee. Initiation is defined to mean that all background information required in paragraph (c)(1) of this clause has been delivered to HUD. The employee may not be given access prior to those two events. HUD may issue a PIV Card and grant access pending the completion of the background investigation. HUD will revoke the PIV Card and the employee's access if the background investigation process (including adjudication of investigation results) for the employee has not been completed within 6 months after the issuance of the PIV Card.

(2) PIV Cards shall identify individuals as contractor employees. Contractor employees shall display their PIV Cards on their persons at all times while working in a HUD facility, and shall present cards for inspection upon request by HUD officials or HUD security personnel.

(3) The contractor shall be responsible for all PIV Cards issued to the contractor's employees and shall immediately notify the GTR if any PIV Card(s) cannot be accounted for. The contractor shall promptly return PIV Cards to HUD as required by the FAR clause at 52.204–9. The contractor shall notify the GTR immediately whenever any contractor employee no longer has a need for his/her HUD-issued PIV Card (e.g., employee terminates employment with the contractor, employee's duties no longer require access to HUD facilities). The GTR will instruct the contractor as to how to return the PIV Card. Upon expiration of this contract, the GTR will instruct the contractor as to how to return all HUD-issued PIV Cards not previously returned. Unless otherwise directed by the Contracting Officer, the

contractor shall not return PIV Cards to any person other than the GTR.

(e) *Control of access.* HUD shall have, and exercise, complete control over granting, denying, withholding, and terminating access of contractor employees to HUD facilities. The GTR will notify the contractor immediately when HUD has determined that an employee is unsuitable or unfit to be permitted access to a HUD facility. The contractor shall immediately notify such employee that he/she no longer has access to any HUD facility, remove the employee from any such facility that he/she may be in, and provide a suitable replacement in accordance with the requirements of this clause.

(f) *Access to HUD information systems.* If this contract requires contractor employees to have access to HUD information system(s), application(s), or information contained in such systems, the contractor shall comply with all requirements of HUDAR clause 2452.239–70, *Access to HUD Systems,* including providing for each affected employee any additional background investigation forms prescribed in that clause.

(g) *Subcontracts.* The contractor shall incorporate this clause in all subcontracts where the requirements specified in paragraph (b) of this section are applicable to performance of the subcontract.

(End of clause)

■ 111. In section 2452.237–77, revise the section heading, the introductory text, and the clause heading to read as follows:

2452.237–77 Temporary closure of HUD facilities.

As prescribed in 2437.110(e)(4), insert the following clause:

TEMPORARY CLOSURE OF HUD FACILITIES (DEC 2012)

* * * * *

■ 112. Revise section 2452.239–70 to read as follows:

2452.239–70 Access to HUD systems.

As prescribed in 2439.107(a), insert the following clause:

ACCESS TO HUD SYSTEMS (DEC 2012)

(a) *Definitions:* As used in this clause—

Access means the ability to obtain, view, read, modify, delete, and/or otherwise make use of information resources.

Application means the use of information resources (information and information technology) to satisfy a specific set of user requirements (see OMB Circular A–130).

Contractor employee means an employee of the prime contractor or of any subcontractor, affiliate, partner, joint venture, or team members with which the contractor is associated. It also includes consultants engaged by any of those entities.

Mission-critical system means an information technology or telecommunications system used or operated by HUD or by a HUD contractor, or organization on behalf of HUD, that processes any information, the loss, misuse, disclosure, or unauthorized access to, or modification of which would have a debilitating impact on the mission of the agency.

NACI means a National Agency Check with Inquiries, the minimum background investigation prescribed by OPM.

PIV Card means the Personal Identity Verification (PIV) Card, the Federal Government-issued identification credential (i.e., identification badge).

Sensitive information means any information of which the loss, misuse, or unauthorized access to, or modification of, could adversely affect the national interest, the conduct of federal programs, or the privacy to which individuals are entitled under section 552a of title 5, United States Code (the Privacy Act), but which has not been specifically authorized under criteria established by an Executive Order or an Act of Congress to be kept secret in the interest of national defense or foreign policy.

System means an interconnected set of information resources under the same direct management control, which shares common functionality. A system normally includes hardware, software, information, data, applications, communications, and people (see OMB Circular A–130). System includes any system owned by HUD or owned and operated on HUD's behalf by another party.

(b) *General.* (1) The performance of this contract requires contractor employees to have access to a HUD system or systems. All such employees who do not already possess a current PIV Card acceptable to HUD shall be required to provide personal background information, undergo a background investigation (NACI or other OPM-required or approved investigation), including an FBI National Criminal History Fingerprint Check, and obtain a PIV Card prior to being permitted access to any such system in performance of this contract. HUD may accept a PIV Card issued by another Federal Government agency but shall not be required to do so. No contractor employee will be permitted access to any HUD system without a PIV Card.

(2) All contractor employees who require access to mission-critical systems or sensitive information contained within a HUD system or application(s) are required to have a more extensive background investigation. The investigation shall be commensurate with the risk and security controls involved in managing, using, or operating the system or applications(s).

(c) *Citizenship-related requirements.* Each affected contractor employee as described in paragraph (b) of this clause shall be:

(1) A United States (U.S.) citizen; or,

(2) A national of the United States (see 8 U.S.C. 1408); or,

(3) An alien lawfully admitted into, and lawfully permitted to be employed in the United States, provided that for any such individual, the Government is able to obtain sufficient background information to complete the investigation as required by this clause. Failure on the part of the contractor to provide sufficient information to perform a required investigation or the inability of the Government to verify information provided for affected contractor employees will result in denial of their access.

(d) *Background investigation process.*

(1) The Government Technical Representative (GTR) shall notify the contractor of those contractor employee positions requiring background investigations.

(i) For each contractor employee requiring access to HUD information systems, the contractor shall submit the following properly completed forms: Standard Form (SF) 85, ''Questionnaire for Non-Sensitive Positions,'' FD 258 (Fingerprint Chart), and a partial Optional Form (OF) 306 (Items 1, 2, 6, 8–13, 16, and 17).

(ii) For each contractor employee requiring access to mission-critical systems and/or sensitive information contained within a HUD system and/or application(s), the contractor shall submit the following properly completed forms: SF–85P, ''Questionnaire for Public Trust Positions;'' FD 258; and a Fair Credit Reporting Act form (authorization for the credit-check portion of the investigation). Contractor employees shall not complete the Medical Release behind the SF–85P.

(iii) The SF–85, 85P, and OF–306 are available from OPM's Web site, *http://www.opm.gov.* The GTR will provide all other forms that are not obtainable via the Internet.

(2) The contractor shall deliver the forms and information required in paragraph (d)(1) of this clause to the GTR.

(3) Affected contractor employees who have had a federal background investigation without a subsequent break in federal employment or federal contract service exceeding 2 years may be exempt from the investigation requirements of this clause subject to verification of the previous investigation. For each such employee, the contractor shall submit the following information in lieu of the forms and information listed in paragraph (d)(1) of this clause: Employee's full name, Social Security number, and place and date of birth.

(4) The investigation process shall consist of a range of personal background inquiries and contacts (written and personal) and verification of the information provided on the investigative forms described in paragraph (d)(1) of this clause.

(5) Upon completion of the investigation process, the GTR will notify the contractor if any contractor employee is determined to be unsuitable to have access to the system(s), application(s), or information. Such an employee may not be given access to those resources. If any such employee has already been given access pending the results of the background investigation, the contractor shall ensure that the employee's access is revoked immediately upon receipt of the GTR's notification.

(6) Failure of the GTR to notify the contractor (see subparagraph (d)(1)) of any employee who should be subject to the requirements of this clause and is known, or should reasonably be known, by the contractor to be subject to the requirements of this clause, shall not excuse the contractor from making such employee(s) known to the GTR. Any such employee who is identified and is working under the contract, without having had the appropriate background

investigation or furnished the required forms for the investigation, shall cease to perform such work immediately and shall not be given access to the system(s)/application(s) described in paragraph (b) of this clause until the contractor has provided the investigative forms required in paragraph (d)(1) of this clause for the employee to the GTR

(7) The contractor shall notify the GTR in writing whenever a contractor employee for whom a background investigation package was required and submitted to HUD, or for whom a background investigation was completed, terminates employment with the contractor or otherwise is no longer performing work under this contract that requires access to the system(s), application(s), or information. The contractor shall provide a copy of the written notice to the Contracting Officer.

(e) *PIV Cards.* (1) HUD will issue a PIV Card to each contractor employee who is to be given access to HUD systems and does not already possess a PIV Card acceptable to HUD (see paragraph (b) of this clause). HUD will not issue the PIV Card until the contractor employee has successfully cleared an FBI National Criminal History Fingerprint Check, and HUD has initiated the background investigation for the contractor employee. Initiation is defined to mean that all background information required in paragraph (d)(1) of this clause has been delivered to HUD. The employee may not be given access prior to those two events. HUD may issue a PIV Card and grant access pending the completion of the background investigation. HUD will revoke the PIV Card and the employee's access if the background investigation process (including adjudication of investigation results) for the employee has not been completed within 6 months after the issuance of the PIV Card.

(2) PIV Cards shall identify individuals as contractor employees. Contractor employees shall display their PIV Cards on their persons at all times while working in a HUD facility, and shall present cards for inspection upon request by HUD officials or HUD security personnel.

(3) The contractor shall be responsible for all PIV Cards issued to the contractor's employees and shall immediately notify the GTR if any PIV Card(s) cannot be accounted for. The contractor shall promptly return PIV Cards to HUD as required by the FAR clause at 52.204–9. The contractor shall notify the GTR immediately whenever any contractor employee no longer has a need for his/her HUD-issued PIV Card (e.g., the employee terminates employment with the contractor, the employee's duties no longer require access to HUD systems). The GTR will instruct the contractor as to how to return the PIV Card. Upon expiration of this contract, the GTR will instruct the contractor as to how to return all HUD-issued PIV Cards not previously returned. Unless otherwise directed by the Contracting Officer, the contractor shall not return PIV Cards to any person other than the GTR.

(f) *Control of access.* HUD shall have and exercise full and complete control over granting, denying, withholding, and terminating access of contractor employees to HUD systems. The GTR will notify the contractor immediately when HUD has determined that an employee is unsuitable or unfit to be permitted access to a HUD system. The contractor shall immediately notify such employee that he/she no longer has access to any HUD system, physically retrieve the employee's PIV Card from the employee, and provide a suitable replacement employee in accordance with the requirements of this clause.

(g) *Incident response notification.* An incident is defined as an event, either accidental or deliberate, that results in unauthorized access, loss, disclosure, modification, or destruction of information technology systems, applications, or data. The contractor shall immediately notify the GTR and the Contracting Officer of any known or suspected incident, or any unauthorized disclosure of the information contained in the system(s) to which the contractor has access.

(h) *Nondisclosure of information.* (1) Neither the contractor nor any of its employees shall divulge or release data or information developed or obtained during performance of this contract, except to authorized government personnel with an established need to know, or upon written approval of the Contracting Officer. Information contained in all source documents and other media provided by HUD is the sole property of HUD.

(2) The contractor shall require that all employees who may have access to the system(s)/applications(s) identified in paragraph (b) of this clause sign a pledge of nondisclosure of information. The employees shall sign these pledges before they are permitted to perform work under this contract. The contractor shall maintain the signed pledges for a period of 3 years after final payment under this contract. The contractor shall provide a copy of these pledges to the GTR.

(i) *Security procedures.* (1) The Contractor shall comply with applicable federal and HUD statutes, regulations, policies, and procedures governing the security of the system(s) to which the contractor's employees have access including, but not limited to:

(i) The Federal Information Security Management Act (FISMA) of 2002;

(ii) OMB Circular A–130, *Management of Federal Information Resources,* Appendix III, Security of Federal Automated Information Resources;

(iii) HUD Handbook 2400.25, *Information Technology Security Policy;*

(iv) HUD Handbook 732.3, *Personnel Security/Suitability;*

(v) Federal Information Processing Standards 201 (FIPS 201), Sections 2.1 and 2.2;

(vi) Homeland Security Presidential Directive 12 (HSPD–12); and

(vii) OMB Memorandum M–05–24, *Implementing Guidance for HSPD–12.*

The HUD Handbooks are available online at: *http://www.hud.gov/offices/adm/hudclips/* or from the GTR.

(2) The contractor shall develop and maintain a compliance matrix that lists each requirement set forth in paragraphs, (b), (c), (d), (e), (f), (g), (h), (i)(1), and (m) of this clause with specific actions taken, and/or procedures implemented, to satisfy each requirement. The contractor shall identify an accountable person for each requirement, the date upon which actions/procedures were initiated/completed, and certify that information contained in this compliance matrix is correct. The contractor shall ensure that information in this compliance matrix is complete, accurate, and up-to-date at all times for the duration of this contract. Upon request, the contractor shall provide copies of the current matrix to HUD.

(3) The Contractor shall ensure that its employees, in performance of the contract, receive annual training (or once if the contract is for less than one year) in HUD information technology security policies, procedures, computer ethics, and best practices in accordance with HUD Handbook 2400.25.

(j) *Access to contractor's systems.* The Contractor shall afford HUD, including the Office of Inspector General, access to the Contractor's facilities, installations, operations, documentation (including the compliance matrix required under paragraph (i)(2) of this clause), databases, and personnel used in performance of the contract. Access shall be provided to the extent required to carry out, but not limited to, any information security program activities, investigation, and audit to safeguard against threats and hazards to the integrity, availability, and confidentiality of HUD data and systems, or to the function of information systems operated on behalf of HUD, and to preserve evidence of computer crime.

(k) *Contractor compliance with this clause.* Failure on the part of the contractor to comply with the terms of this clause may result in termination of this contract for default.

(l) *Physical access to Federal Government facilities.* The contractor and any subcontractor(s) shall also comply with the requirements of HUDAR clause 2452.237–75 when the contractor's or subcontractor's employees will perform any work under this contract on site in a HUD or other Federal Government facility.

(m) *Subcontracts.* The contractor shall incorporate this clause in all subcontracts where the requirements specified in paragraph (b) of this section are applicable to performance of the subcontract.

(End of clause)

Dated: November 27, 2012.

Jemine A. Bryon,

Chief Procurement Officer.

[FR Doc. 2012–29324 Filed 12–7–12; 8:45 am]

BILLING CODE 4210–67–P

Reader Aids

Federal Register

Vol. 77, No. 237

Monday, December 10, 2012

CUSTOMER SERVICE AND INFORMATION

Federal Register/Code of Federal Regulations	
General Information, indexes and other finding aids	**202–741–6000**
Laws	**741–6000**
Presidential Documents	
Executive orders and proclamations	**741–6000**
The United States Government Manual	**741–6000**
Other Services	
Electronic and on-line services (voice)	**741–6020**
Privacy Act Compilation	**741–6064**
Public Laws Update Service (numbers, dates, etc.)	**741–6043**
TTY for the deaf-and-hard-of-hearing	**741–6086**

ELECTRONIC RESEARCH

World Wide Web

Full text of the daily Federal Register, CFR and other publications is located at: **www.fdsys.gov.**

Federal Register information and research tools, including Public Inspection List, indexes, and links to GPO Access are located at: **www.ofr.gov.**

E-mail

FEDREGTOC-L (Federal Register Table of Contents LISTSERV) is an open e-mail service that provides subscribers with a digital form of the Federal Register Table of Contents. The digital form of the Federal Register Table of Contents includes HTML and PDF links to the full text of each document.

To join or leave, go to **http://listserv.access.gpo.gov** and select *Online mailing list archives, FEDREGTOC-L, Join or leave the list (or change settings);* then follow the instructions.

PENS (Public Law Electronic Notification Service) is an e-mail service that notifies subscribers of recently enacted laws.

To subscribe, go to **http://listserv.gsa.gov/archives/publaws-l.html** and select *Join or leave the list (or change settings);* then follow the instructions.

FEDREGTOC-L and **PENS** are mailing lists only. We cannot respond to specific inquiries.

Reference questions. Send questions and comments about the Federal Register system to: **fedreg.info@nara.gov**

The Federal Register staff cannot interpret specific documents or regulations.

Reminders. Effective January 1, 2009, the Reminders, including Rules Going Into Effect and Comments Due Next Week, no longer appear in the Reader Aids section of the Federal Register. This information can be found online at **http://www.regulations.gov.**

CFR Checklist. Effective January 1, 2009, the CFR Checklist no longer appears in the Federal Register. This information can be found online at **http://bookstore.gpo.gov/.**

FEDERAL REGISTER PAGES AND DATE, DECEMBER

71483–71686 3
71687–72194 4
72195–72680 5
72681–72912 6
72913–73262 7
73263–73540 10

CFR PARTS AFFECTED DURING DECEMBER

At the end of each month the Office of the Federal Register publishes separately a List of CFR Sections Affected (LSA), which lists parts and sections affected by documents published since the revision date of each title.

3 CFR

Proclamations:
8909 72195
8910 72675
8911 72677
8912 72679
8913 72911

5 CFR

870 71687

7 CFR

915 71688
922 72681
923 72683
927 72197
Proposed Rules:
927 72245
3201 72654

9 CFR

417 72686

10 CFR

171 72199
710 71689
Proposed Rules:
61 72997
429 72763
431 72763

12 CFR

905 73263
1090 72913
1200 73263
1700 73263
Proposed Rules:
1209 72247

13 CFR

121 .....72691, 72702
Proposed Rules:
121 72766

14 CFR

21 71691
39 .....71483, 71485, 71487, 71489, 71491, 72200, 72203, 72913, 73265, 73268, 73270, 73273, 73279, 73282
71 .....71492, 71493
91 .....72766, 72778
97 .....71494, 71495, 71497, 71499
Proposed Rules:
39 .....71723, 71729, 71731, 72250, 72252, 72766, 72778, 73340, 73343
71 71734
91 72998
121 .....71735, 72998
125 .....71735, 72998
135 .....71735, 72998

15 CFR

6 72915
744 72917
774 72917
902 71501
Proposed Rules:
1400 72254

16 CFR

681 72712
1107 72205
1500 .....73286, 73289
1700 73294
Proposed Rules:
240 71741
1112 .....73345, 73354
1222 73345
1225 73354

17 CFR

240 73302
249 73302
Proposed Rules:
Ch. II 71743
240 71568

19 CFR

4 73306
10 72715
24 .....72715, 73306
101 73306
102 .....72715, 73306
122 73310
123 72715
127 73306
128 72715
141 72715
143 72715
145 72715
148 72715
159 73306
161 73306
177 73306

21 CFR

173 71695
Proposed Rules:
150 71746
500 72254
520 72254
522 72254
524 72254
529 72254
556 72254
558 72254
573 71750

24 CFR

203 72219

232 72920
1000 71513

25 CFR

162 72240

26 CFR

1 72923
40 72721
46 72721
48 72924
602 72721
Proposed Rules:
1 ....72268, 72612
31 72268

27 CFR

25 72939
Proposed Rules:
25 72999

29 CFR

Proposed Rules:
18 72142
1910 72781
1926 72781

30 CFR

Proposed Rules:
1206 71751

31 CFR

515 71530
Proposed Rules:
356 72278
1010 72783

32 CFR

68 72941
706 72736
Proposed Rules:
157 72788

33 CFR

100 ....71531, 72956, 72957, 73311
117 72737
165 ....71697, 72957

34 CFR

685 72960

37 CFR

Proposed Rules:
201 72788
203 72788

38 CFR

51 72738
53 73312
Proposed Rules:
3 73366

39 CFR

20 72960

40 CFR

52 ....71533, 71551, 71700, 72512, 72742, 72966, 72968, 73313, 73316, 73320, 73322
55 72744
80 72746
122 72970
180 ....71555, 72223, 72232, 72747, 72975, 72984
716 71561
Proposed Rules:
52 ....71568, 71751, 72284, 72287, 72291, 73005, 73369, 73386, 73387, 73391, 73392
60 72294
63 72294

42 CFR

8 72752
73 71702
495 72985

44 CFR

67 ....71702, 73324
Proposed Rules:
67 ....73393, 73394, 73396, 73398

45 CFR

170 72985
Proposed Rules:
153 73118
155 73118
156 73118
157 73118
158 73118
800 72582

46 CFR

8 73334

47 CFR

0 71711
54 ....71711, 71712
73 ....71713, 72237
Proposed Rules:
20 72294
76 72295

48 CFR

Ch. I 73516, 73520
4 73516
25 73516
52 73516
2401 73524
2402 73524
2403 73524
2404 73524
2406 73524
2407 73524
2409 73524
2415 73524
2416 73524
2417 73524
2419 73524
2426 73524
2427 73524
2428 73524
2432 73524
2437 73524
2439 73524
2442 73524
2452 73524

49 CFR

567 71714
571 71717
Proposed Rules:
571 ....71752, 72296

50 CFR

17 ....71876, 72070
300 71501
622 ....72991, 73338
635 72993
648 ....71720, 72242, 72762, 72994
679 ....72243, 72995
Proposed Rules:
17 ....71757, 71759
223 73220
224 73220
648 72297
660 73005
679 ....72297, 72791

LIST OF PUBLIC LAWS

This is a continuing list of public bills from the current session of Congress which have become Federal laws. It may be used in conjunction with ''P L U S'' (Public Laws Update Service) on 202–741–6043. This list is also available online at *http://www.archives.gov/federal-register/laws*.

The text of laws is not published in the **Federal Register** but may be ordered in ''slip law'' (individual pamphlet) form from the Superintendent of Documents, U.S. Government Printing Office, Washington, DC 20402 (phone, 202–512–1808). The text will also be made available on the Internet from GPO's Federal Digital System (FDsys) at *http://www.gpo.gov/fdsys*. Some laws may not yet be available.

H.R. 2453/P.L. 112–201

Mark Twain Commemorative Coin Act (Dec. 4, 2012; 126 Stat. 1479)

H.R. 6118/P.L. 112–202

Taking Essential Steps for Testing Act of 2012 (Dec. 4, 2012; 126 Stat. 1483)

H.R. 6131/P.L. 112–203

To extend the Undertaking Spam, Spyware, And Fraud Enforcement With Enforcers beyond Borders Act of 2006, and for other purposes. (Dec. 4, 2012; 126 Stat. 1484)

H.R. 6570/P.L. 112–204

To amend the American Recovery and Reinvestment Act of 2009 and the Emergency Economic Stabilization Act of 2008 to consolidate certain CBO reporting requirements. (Dec. 4, 2012; 126 Stat. 1485)

Last List November 30, 2012

Public Laws Electronic Notification Service (PENS)

PENS is a free electronic mail notification service of newly enacted public laws. To subscribe, go to *http://listserv.gsa.gov/archives/publaws-l.html*

Note: This service is strictly for E-mail notification of new laws. The text of laws is not available through this service. **PENS** cannot respond to specific inquiries sent to this address.