AUTHENTICATED
U.S. GOVERNMENT
INFORMATION
GPO

FEDERAL REGISTER

Vol. 78 Monday,
No. 87 May 6, 2013

Pages 26231–26484

OFFICE OF THE FEDERAL REGISTER

The **FEDERAL REGISTER** (ISSN 0097–6326) is published daily, Monday through Friday, except official holidays, by the Office of the Federal Register, National Archives and Records Administration, Washington, DC 20408, under the Federal Register Act (44 U.S.C. Ch. 15) and the regulations of the Administrative Committee of the Federal Register (1 CFR Ch. I). The Superintendent of Documents, U.S. Government Printing Office, Washington, DC 20402 is the exclusive distributor of the official edition. Periodicals postage is paid at Washington, DC.

The **FEDERAL REGISTER** provides a uniform system for making available to the public regulations and legal notices issued by Federal agencies. These include Presidential proclamations and Executive Orders, Federal agency documents having general applicability and legal effect, documents required to be published by act of Congress, and other Federal agency documents of public interest.

Documents are on file for public inspection in the Office of the Federal Register the day before they are published, unless the issuing agency requests earlier filing. For a list of documents currently on file for public inspection, see *www.ofr.gov.*

The seal of the National Archives and Records Administration authenticates the Federal Register as the official serial publication established under the Federal Register Act. Under 44 U.S.C. 1507, the contents of the **Federal Register** shall be judicially noticed.

The **Federal Register** is published in paper and on 24x microfiche. It is also available online at no charge at *www.fdsys.gov*, a service of the U.S. Government Printing Office.

The online edition of the **Federal Register** is issued under the authority of the Administrative Committee of the Federal Register as the official legal equivalent of the paper and microfiche editions (44 U.S.C. 4101 and 1 CFR 5.10). It is updated by 6:00 a.m. each day the **Federal Register** is published and includes both text and graphics from Volume 59, 1 (January 2, 1994) forward. For more information, contact the GPO Customer Contact Center, U.S. Government Printing Office. Phone 202-512-1800 or 866-512-1800 (toll free). E-mail, *gpo@custhelp.com.*

The annual subscription price for the **Federal Register** paper edition is $749 plus postage, or $808, plus postage, for a combined **Federal Register, Federal Register** Index and List of CFR Sections Affected (LSA) subscription; the microfiche edition of the **Federal Register** including the **Federal Register** Index and LSA is $165, plus postage. Six month subscriptions are available for one-half the annual rate. The prevailing postal rates will be applied to orders according to the delivery method requested. The price of a single copy of the daily **Federal Register,** including postage, is based on the number of pages: $11 for an issue containing less than 200 pages; $22 for an issue containing 200 to 400 pages; and $33 for an issue containing more than 400 pages. Single issues of the microfiche edition may be purchased for $3 per copy, including postage. Remit check or money order, made payable to the Superintendent of Documents, or charge to your GPO Deposit Account, VISA, MasterCard, American Express, or Discover. Mail to: U.S. Government Printing Office—New Orders, P.O. Box 979050, St. Louis, MO 63197-9000; or call toll free 1-866-512-1800, DC area 202-512-1800; or go to the U.S. Government Online Bookstore site, see *bookstore.gpo.gov.*

There are no restrictions on the republication of material appearing in the **Federal Register.**

How To Cite This Publication: Use the volume number and the page number. Example: 77 FR 12345.

Postmaster: Send address changes to the Superintendent of Documents, Federal Register, U.S. Government Printing Office, Washington, DC 20402, along with the entire mailing label from the last issue received.

SUBSCRIPTIONS AND COPIES

PUBLIC

Subscriptions:

Paper or fiche	**202–512–1800**
Assistance with public subscriptions	**202–512–1806**

General online information **202–512–1530; 1–888–293–6498**

Single copies/back copies:

Paper or fiche	**202–512–1800**
Assistance with public single copies	**1–866–512–1800 (Toll-Free)**

FEDERAL AGENCIES

Subscriptions:

Paper or fiche	**202–741–6005**
Assistance with Federal agency subscriptions	**202–741–6005**

FEDERAL REGISTER WORKSHOP

THE FEDERAL REGISTER: WHAT IT IS AND HOW TO USE IT

FOR: Any person who uses the Federal Register and Code of Federal Regulations.

WHO: Sponsored by the Office of the Federal Register.

WHAT: Free public briefings (approximately 3 hours) to present:

1. The regulatory process, with a focus on the Federal Register system and the public's role in the development of regulations.
2. The relationship between the Federal Register and Code of Federal Regulations.
3. The important elements of typical Federal Register documents.
4. An introduction to the finding aids of the FR/CFR system.

WHY: To provide the public with access to information necessary to research Federal agency regulations which directly affect them. There will be no discussion of specific agency regulations.

WHEN: Tuesday, May 14, 2013
9 a.m.–12:30 p.m.

WHERE: Office of the Federal Register
Conference Room, Suite 700
800 North Capitol Street, NW.
Washington, DC 20002

RESERVATIONS: (202) 741–6008

Printed on recycled paper.

Contents

Federal Register

Vol. 78, No. 87

Monday, May 6, 2013

Agriculture Department
See Animal and Plant Health Inspection Service
See Forest Service

Animal and Plant Health Inspection Service
NOTICES
Plants for Planting Whose Importation is Not Authorized Pending Pest Risk Analysis:
Data Sheets for Taxa of Plants for Planting That are Quarantine Pests or Hosts of Quarantine Pests, 26316–26317

Arts and Humanities, National Foundation
See National Foundation on the Arts and the Humanities

Centers for Medicare & Medicaid Services
PROPOSED RULES
Medicare Programs:
Prospective Payment System and Consolidated Billing for Skilled Nursing Facilities for FY 2014, 26438–26480
NOTICES
Agency Information Collection Activities; Proposals, Submissions, and Approvals, 26370–26371
Hearings:
Reconsideration of Disapproval of Kentucky State Plan Amendments, 26371–26372

Children and Families Administration
NOTICES
Agency Information Collection Activities; Proposals, Submissions, and Approvals:
Health Profession Opportunity Grants Program, 26372–26373

Coast Guard
RULES
Drawbridge Operations:
Lake Washington Ship Canal, Seattle, WA, 26249–26250
York River between Yorktown and Gloucester Point, VA, 26248–26249
Special Local Regulations:
50 Aniversario Balneario de Boqueron, Bahia de Boqueron; Boqueron, PR, 26246–26248
PROPOSED RULES
Safety Zones:
Captain of the Port Detroit Zone Annual Events, 26293–26300
NOTICES
Bridge Permit Applications; Availability:
Proposal to Replace Existing Movable I–5 Bridge Across Columbia River with Fixed Multi-use Bridge, etc.; Public Meetings, 26380–26381

Commerce Department
See International Trade Administration
See National Oceanic and Atmospheric Administration
See National Telecommunications and Information Administration
NOTICES
Agency Information Collection Activities; Proposals, Submissions, and Approvals, 26318–26319

Commission of Fine Arts
NOTICES
Meetings:
Commission of Fine Arts, 26324

Comptroller of the Currency
NOTICES
Meetings:
Mutual Savings Association Advisory Committee, 26424

Defense Department
NOTICES
Arms Sales, 26324–26334

Education Department
NOTICES
Agency Information Collection Activities; Proposals, Submissions, and Approvals:
2014–2015 Federal Student Aid Application, 26334–26336
Program for International Assessment of Adult Competencies National Supplement Data Collection 2013–2014, 26336–26337

Energy Department
See Federal Energy Regulatory Commission
NOTICES
Filings of Self-Certification of Coal Capability under the Powerplant and Industrial Fuel Use Act, 26337
Meetings:
Methane Hydrate Advisory Committee, 26337–26338

Environmental Protection Agency
RULES
Air Quality Implementation Plans; Approvals and Promulgations:
Illinois; Consumer Products and AIM Rules, 26258–26261
Indiana; Consent Decree Requirements, 26258
Texas; Control of Air Pollution from Nitrogen Compounds from Stationary Sources; Revisions, 26251–26255
Texas; Texas Low Emission Diesel Fuel Rule Revisions, 26255–26258
PROPOSED RULES
Air Quality Implementation Plans; Approvals and Promulgations:
Illinois; Consumer Products and AIM Rules, 26301–26302
Texas; Control of Air Pollution from Nitrogen Compounds from Stationary Sources; Revisions, 26300–26301
Texas; Texas Low Emission Diesel Fuel Rule Revisions, 26301

Executive Office of the President
See Presidential Documents

Farm Credit Administration
NOTICES
Meetings; Sunshine Act, 26362

Federal Aviation Administration
RULES
Airworthiness Directives:
Diamond Aircraft Industries GmbH Powered Gliders, 26241–26243
The Boeing Company Airplanes, 26233–26241
Class E Airspace; Amendments:
Easton, PA, 26243–26244
PROPOSED RULES
Airworthiness Directives:
The Boeing Company Airplanes, 26286–26289
Special Conditions:
Embraer, S.A., Model EMB–550 Airplane; Side-Facing Seats; Installation of Airbag Systems in Shoulder Belts, 26280–26285

Federal Communications Commission
RULES
Connect America Fund:
Developing a Unified Intercarrier Compensation Regime, 26261–26269
High-Cost Universal Service Support, 26269–26277
NOTICES
Agency Information Collection Activities; Proposals, Submissions, and Approvals, 26362–26368

Federal Election Commission
NOTICES
Meetings; Sunshine Act, 26368

Federal Emergency Management Agency
NOTICES
Major Disaster Declarations:
Maine; Amendment No. 1, 26381–26382

Federal Energy Regulatory Commission
NOTICES
Agency Information Collection Activities; Proposals, Submissions, and Approvals, 26338–26339
Applications and Environmental Impact Statements; Availability, etc.:
Exelon Generation Co., LLC, 26339–26340
Applications:
Aguirre Offshore GasPort, LLC, 26341–26342
Brookfield Renewable Power, Inc., 26345
Exelon Generation Co., LLC, 26343–26345
Small Hydro of Texas, Inc., 26342–26343
Southern Energy, Inc.; Declaration of Intention, 26347–26348
Texas Gas Transmission, LLC, 26340–26341
York Haven Power Co., LLC, 26345–26347
Combined Filings, 26348–26349
Commissioner and Staff Attendances:
North American Electric Reliability Corporation Meetings, 26349
Competing Preliminary Permit Applications:
LockPlus Hydro Friends Fund VI, LLC and FFP Iowa 2, LLC, 26349–26350
Environmental Assessments and Environmental Site Reviews; Availability, etc.:
Giles County Project, Columbia Gas Transmission, LLC, 26350–26352
Environmental Assessments; Availability, etc.:
Southeast Market Expansion Project; Gulf South Pipeline Co., LP, 26352–26354
Environmental Impact Statements; Availability, etc.:
Northeast Connector Project, Transcontinental Gas Pipeline Co., LLC, 26354–26356
Environmental Site Reviews:
York Haven Power Co., LLC; Exelon Generation Co., LLC; Exelon Generation Co., LLC, 26356–26357
Filings:
Cranberry Pipeline Corp., 26357
License Applications:
Alaska Electric Light and Power Co., 26357–26358
Meetings:
Bureau of Land Management; Eagle Mountain Pumped Storage Hydroelectric Project, Eagle Crest Energy, 26358
Petitions for Declaratory Orders:
Marketlink, LLC, 26358–26359
TransCanada Keystone Pipeline, LP, 26358
Preliminary Permit Applications:
Community of Elfin Cove, DBA Elfin Cove Utility Commission, 26359
FFP Project 111, LLC, 26359–26360
FFP Project 112, LLC, 26360
Prior Notice Activities under Blanket Certificates:
Dominion Transmission Inc., 26360–26361
Programmatic Agreements; Revised Restricted Service Lists:
Duke Energy Carolinas, LLC; Keowee–Toxaway Hydroelectric Project, SC and NC, 26361
Staff Attendances, 26361

Federal Highway Administration
NOTICES
Environmental Impact Statements; Availability, etc.:
City of Buffalo, Erie County, NY, 26416–26417
Final Federal Agency Actions on Transportation Projects:
Washington State, 26417

Federal Motor Carrier Safety Administration
NOTICES
Qualification of Drivers; Exemption Applications:
Diabetes Mellitus, 26419–26423
Hearing, 26417–26419

Federal Railroad Administration
NOTICES
Meetings:
Railroad Safety Advisory Committee, 26423–26424

Federal Reserve System
NOTICES
Changes in Bank Control:
Acquisitions of Shares of a Bank or Bank Holding Company, 26368–26369
Formations of, Acquisitions by, and Mergers of Bank Holding Companies, 26369
Formations of, Acquisitions by, and Mergers of Savings and Loan Holding Companies, 26369
Proposals to Engage in or to Acquire Companies Engaged in Permissible Nonbanking Activities, 26369

Federal Trade Commission
PROPOSED RULES
Guides for the Jewelry, Precious Metals, and Pewter Industries; Public Roundtable, 26289–26292

Fine Arts Commission
See Commission of Fine Arts

Fish and Wildlife Service
PROPOSED RULES
Endangered and Threatened Wildlife and Plants:
Listing Lesser Prairie-Chicken as Threatened Species with Special Rule, 26302–26308

Threatened Status for Coral Pink Sand Dunes Tiger Beetle and Designation of Critical Habitat, 26308–26315
NOTICES
Recovery Permit Applications:
Endangered and Threatened Wildlife and Plants, 26384

Food and Drug Administration
NOTICES
Agency Information Collection Activities; Proposals, Submissions, and Approvals:
Electronic Submission Process for Voluntary Complaints to Center for Devices and Radiological Health, 26373–26374
Evaluation of the Prescription Drug User Fee Act Workload Adjuster, 26374–26375
Workshops:
Current Good Manufacturing Practices; Creating, Implementing, and Sustaining a Culture of Quality, 26375–26376

Foreign Assets Control Office
NOTICES
Blocking or Unblocking of Persons and Property:
Unblocking of One Individual Specially Designated Global Terrorist, 26424

Foreign Claims Settlement Commission
NOTICES
Meetings; Sunshine Act, 26398

Forest Service
NOTICES
Environmental Impact Statements; Availability, etc.:
Jess Project, Klamath National Forest, CA, 26317–26318

Health and Human Services Department
See Centers for Medicare & Medicaid Services
See Children and Families Administration
See Food and Drug Administration
See National Institutes of Health
NOTICES
Meetings:
President's Council on Fitness, Sports, and Nutrition; Correction, 26370

Homeland Security Department
See Coast Guard
See Federal Emergency Management Agency
See U.S. Customs and Border Protection

Housing and Urban Development Department
NOTICES
Basic Statutory Mortgage Limits for Multifamily Housing Programs, 26383

Indian Affairs Bureau
NOTICES
Indian Entities Recognized and Eligible to Receive Services from the United States, 26384–26389

Interior Department
See Fish and Wildlife Service
See Indian Affairs Bureau
See Land Management Bureau
See National Park Service
NOTICES
Environmental Assessments; Availability, etc.:
Proposed Increase in Operation, Maintenance and Replacement Activities; Wasatch County Water Efficiency Project, 26383–26384

Internal Revenue Service
RULES
Updating of Employer Identification Numbers, 26244–26246
NOTICES
Agency Information Collection Activities; Proposals, Submissions, and Approvals, 26425

International Trade Administration
NOTICES
Antidumping Duty Administrative Reviews; Results, Extensions, Amendments, etc.:
Certain Preserved Mushrooms from India; Rescission, 26319

International Trade Commission
NOTICES
Caribbean Basin Economic Recovery Act:
Impact on U.S. Industries and Consumers and on Beneficiary Countries, 21st Report; Public Hearing, 26392–26393
Investigations:
Certain Linear Actuators, 26393–26394
Renewable Energy and Related Services; Recent Developments, 26394
Meetings; Sunshine Act, 26394

Justice Department
See Foreign Claims Settlement Commission
NOTICES
Agency Information Collection Activities; Proposals, Submissions, and Approvals:
Application for Approval as Nonprofit Budget and Credit Counseling Agency, 26394–26395
Application for Approval as Provider of Personal Financial Management Instructional Course, 26397–26398
Bureau of Justice Assistance Application Form, Bulletproof Vest Partnership, 26396
FBI National Academy Level 1 Evaluation, Student Course Questionnaire and FBI National Academy, General Remarks Questionnaire, 26396–26397
Office on Violence Against Women Solicitation Template, 26395–26396

Land Management Bureau
NOTICES
Meetings:
Northwest Colorado Resource Advisory Council; Location Change, 26389–26390
Proposed Withdrawal of Public Lands and Opportunity for Public Meeting:
Oregon, 26390–26391

National Capital Planning Commission
NOTICES
Meetings:
Foreign Missions and International Organizations Element, Comprehensive Plan for the National Capital, Federal Elements, 26398–26399

National Foundation on the Arts and the Humanities
NOTICES
Agency Information Collection Activities; Proposals, Submissions, and Approvals, 26399
Meetings:
Arts Advisory Panel, 26399

National Institutes of Health
NOTICES
Meetings:
Center for Scientific Review, 26376–26379
National Cancer Institute, 26379
National Center for Advancing Translational Sciences, 26377–26378
National Institute of Allergy and Infectious Diseases, 26376

National Oceanic and Atmospheric Administration
RULES
Fisheries off West Coast States:
Biennial Specifications and Management Measures; Inseason Adjustments, 26277–26279
NOTICES
Deepwater Horizon Oil Spill:
Proposal of Future Early Restoration Projects and Environmental Reviews, 26319–26323
Permits:
Endangered Species; File No. 17183, 26323

National Park Service
NOTICES
National Register of Historic Places; Pending Nominations and Related Actions, 26391–26392

National Science Foundation
NOTICES
Meetings; Sunshine Act, 26399–26401

National Telecommunications and Information Administration

NOTICES
Meetings:
First Responder Network Authority Board, 26323

Nuclear Regulatory Commission
NOTICES
Environmental Assessments; Availability, etc.:
Connecticut Yankee Atomic Power Co., Haddam Neck Plant, 26401–26404

Postal Regulatory Commission
NOTICES
New Competitive Products, 26404–26405
New Postal Products, 26405–26406

Postal Service
NOTICES
Product Changes:
Parcel Return Service Negotiated Service Agreement, 26406
Priority Mail Negotiated Service Agreement, 26406

Presidential Documents
PROCLAMATIONS
Special Observances:
National Day of Prayer (Proc. 8974), 26481–26484
ADMINISTRATIVE ORDERS
Burma; Continuation of National Emergency (Notice of May 2, 2013), 26231

Securities and Exchange Commission
NOTICES
Agency Information Collection Activities; Proposals, Submissions, and Approvals, 26406
Applications:
Beverly Hills Bancorp Inc., 26410–26412
Goldman Sachs Trust II, et al., 26407–26410
W2007 Grace Acquisition I, Inc., 26407
Meetings; Sunshine Act, 26412–26413
Self-Regulatory Organizations; Proposed Rule Changes:
Chicago Board Options Exchange, Inc.; Correction, 26413
Options Clearing Corp., 26413–26416

Sentencing Commission, United States
See United States Sentencing Commission

Transportation Department
See Federal Aviation Administration
See Federal Highway Administration
See Federal Motor Carrier Safety Administration
See Federal Railroad Administration

Treasury Department
See Comptroller of the Currency
See Foreign Assets Control Office
See Internal Revenue Service

U.S. Customs and Border Protection
NOTICES
Meetings:
Advisory Committee on Commercial Operations of Customs and Border Protection, 26382–26383

United States Sentencing Commission
NOTICES
Sentencing Guidelines for United States Courts, 26425–26435

Veterans Affairs Department
RULES
Payment for Home Health Services and Hospice Care to Non-VA Providers, 26250–26251

Separate Parts In This Issue

Part II
Health and Human Services Department, Centers for Medicare & Medicaid Services, 26438–26480

Part III
Presidential Documents, 26481–26484

Reader Aids

Consult the Reader Aids section at the end of this page for phone numbers, online resources, finding aids, reminders, and notice of recently enacted public laws.

To subscribe to the Federal Register Table of Contents LISTSERV electronic mailing list, go to http://listserv.access.gpo.gov and select Online mailing list archives, FEDREGTOC-L, Join or leave the list (or change settings); then follow the instructions.

CFR PARTS AFFECTED IN THIS ISSUE

A cumulative list of the parts affected this month can be found in the Reader Aids section at the end of this issue.

3 CFR

Proclamations:

8974 26483

Administrative Orders:

Notices:

Notice of May 2, 2013 26231

14 CFR

39 (2 documents) 26233, 26241

71 26243

Proposed Rules:

25 26280

39 26286

16 CFR

Proposed Rules:

23 26289

26 CFR

301 26244

602 26244

33 CFR

100 26246

117 (2 documents) 26248, 26249

Proposed Rules:

165 26293

38 CFR

17 26250

40 CFR

52 (4 documents) 26251, 26255, 26258

Proposed Rules:

52 (3 documents) 26300, 26301

42 CFR

Proposed Rules:

413 26438

424 26438

47 CFR

51 26261

54 (2 documents) 26261, 26269

69 26261

50 CFR

660 26277

Proposed Rules:

17 (2 documents) 26302, 26308

Federal Register
Vol. 78, No. 87
Monday, May 6, 2013

Presidential Documents

Title 3—

The President

Notice of May 2, 2013

Continuation of the National Emergency With Respect To Burma

On May 20, 1997, the President issued Executive Order 13047, certifying to the Congress under section 570(b) of the Foreign Operations, Export Financing, and Related Programs Appropriations Act, 1997 (Public Law 104–), that the Government of Burma had committed large-scale repression of the democratic opposition in Burma after September 30, 1996, thereby invoking the prohibition on new investment in Burma by United States persons contained in that section. The President also declared a national emergency pursuant to the International Emergency Economic Powers Act, 50 U.S.C. 1701–1706, to deal with the unusual and extraordinary threat to the national security and foreign policy of the United States constituted by the actions and policies of the Government of Burma.

The actions and policies of the Government of Burma continue to pose an unusual and extraordinary threat to the national security and foreign policy of the United States. For this reason, the national emergency declared on May 20, 1997, and the measures adopted to deal with that emergency in Executive Orders 13047 of May 20, 1997; 13310 of July 28, 2003; 13448 of October 18, 2007; 13464 of April 30, 2008; and 13619 of July 11, 2012, must continue in effect beyond May 20, 2013.

Therefore, in accordance with section 202(d) of the National Emergencies Act (50 U.S.C. 1622(d)), I am continuing for 1 year the national emergency with respect to Burma declared in Executive Order 13047. This notice shall be published in the *Federal Register* and transmitted to the Congress.

THE WHITE HOUSE,
May 2, 2013.

[FR Doc. 2013–10817
Filed 5–3–13; 8:45 am]
Billing code 3295–F3

Rules and Regulations

Federal Register
Vol. 78, No. 87
Monday, May 6, 2013

This section of the FEDERAL REGISTER contains regulatory documents having general applicability and legal effect, most of which are keyed to and codified in the Code of Federal Regulations, which is published under 50 titles pursuant to 44 U.S.C. 1510.

The Code of Federal Regulations is sold by the Superintendent of Documents. Prices of new books are listed in the first FEDERAL REGISTER issue of each week.

DEPARTMENT OF TRANSPORTATION

Federal Aviation Administration

14 CFR Part 39

[Docket No. FAA–2011–1231; Directorate Identifier 2011–NM–088–AD; Amendment 39–17418; AD 2013–08–01]

RIN 2120–AA64

Airworthiness Directives; The Boeing Company Airplanes

AGENCY: Federal Aviation Administration (FAA), DOT.

ACTION: Final rule.

SUMMARY: We are adopting a new airworthiness directive (AD) for certain The Boeing Company Model 737–600, –700, –700C, –800, –900, and –900ER series airplanes. This AD was prompted by reports of damaged fire seals on the forward edge of the thrust reverser. This AD requires inspecting to detect damage to the upper fire seals on the forward edge of the thrust reverser, where the fire seal contacts the 12-o'clock engine strut, and for correct stiffness and vent holes, and doing corrective actions if necessary; and installing a bracket for the fire seal. We are issuing this AD to detect and correct damage to the fire seals, which could allow airflow into the engine fire zone and could degrade the ability to extinguish an engine fire.

DATES: This AD is effective June 10, 2013.

The Director of the Federal Register approved the incorporation by reference of a certain publication listed in the AD as of June 10, 2013.

ADDRESSES: For service information identified in this AD, contact Boeing Commercial Airplanes, Attention: Data & Services Management, P.O. Box 3707, MC 2H–65, Seattle, Washington 98124–2207; telephone 206–544–5000, extension 1; fax 206–766–5680; Internet *https://www.myboeingfleet.com.* You may review copies of the referenced service information at the FAA, Transport Airplane Directorate, 1601 Lind Avenue SW., Renton, Washington. For information on the availability of this material at the FAA, call 425–227–1221.

Examining the AD Docket

You may examine the AD docket on the Internet at *http://www.regulations.gov;* or in person at the Docket Management Facility between 9 a.m. and 5 p.m., Monday through Friday, except Federal holidays. The AD docket contains this AD, the regulatory evaluation, any comments received, and other information. The address for the Docket Office (phone: 800–647–5527) is Document Management Facility, U.S. Department of Transportation, Docket Operations, M–30, West Building Ground Floor, Room W12–140, 1200 New Jersey Avenue SE., Washington, DC 20590.

FOR FURTHER INFORMATION CONTACT: Sue Lucier, Aerospace Engineer, Propulsion Branch, ANM–140S, FAA, Seattle Aircraft Certification Office, 1601 Lind Avenue SW., Renton, Washington 98057–3356; phone: 425–917–6438; fax: 425–917–6590; email: *Suzanne.Lucier@faa.gov.*

SUPPLEMENTARY INFORMATION:

Discussion

We issued a notice of proposed rulemaking (NPRM) to amend 14 CFR part 39 to include an AD that would apply to the specified products. That NPRM published in the **Federal Register** on November 18, 2011 (76 FR 71472). That NPRM proposed to require inspecting to detect damage to the upper fire seals on the forward edge of the thrust reverser, where the fire seal contacts the 12-o'clock engine strut, and for correct stiffness and vent holes, and doing corrective actions if necessary; and installing a bracket for the fire seal.

Revised Service Information

Since we published the NPRM (76 FR 71472, November 18, 2011), Boeing has issued Special Attention Service Bulletin 737–78–1086, Revision 1, dated May 15, 2012. That revision removes one airplane from the effectivity, updates and corrects certain illustrations and procedures, and states that no more work is necessary on airplanes changed in accordance with the original issue (Boeing Special Attention Service Bulletin 737–78–1086, dated October 6, 2010), which was specified as the appropriate source of service information in the NPRM.

We have accordingly changed paragraphs (g), (g)(1), and (g)(2) of this final rule to specify Boeing Special Attention Service Bulletin 737–78–1086, Revision 1, dated May 15, 2012; added paragraph (i) of this AD to give credit for actions done before the effective date of this AD using Boeing Special Attention Service Bulletin 737–78–1086, dated October 6, 2010; and reidentified subsequent paragraphs.

However, the revised service bulletin, Boeing Special Attention Service Bulletin 737–78–1086, Revision 1, dated May 15, 2012, contains two errors, as follows:

- Figure 10, Sheet 3 of 3: Note row (a) of the table shown in Figure 10, incorrectly refers the reader to ''(a)'' instead of Note row (b).
- Figures 6, 7, 15, and 16, all Sheet 2 of 3, all View B: These illustrations show the top fastener to be removed in the center of three fasteners in order to remove the retainer. However, these three fasteners are adjustable sustained preload (ASP) fasteners that do not require removal for this action. View B also incorrectly shows the location of the top rivet hole, which is actually below the row of ASP fasteners. These errors in those figures affect the actions specified in paragraph (g)(2) of this AD. The other instructions in the figures are correct.

To clarify the correct actions for paragraph (g)(2) of this AD, we have added paragraph (h) to this AD to describe these differences, and Figures 1 through 4 of this AD to show the correct fastener and rivet hole information.

Comments

We gave the public the opportunity to participate in developing this AD. The following presents the comments received on the proposal (76 FR 71472, November 18, 2011) and the FAA's response to each comment.

Request To Change the Unsafe Condition Statement

Boeing requested that we rephrase the unsafe condition described in the Summary and paragraph (e) of the NPRM (76 FR 71472, November 18, 2011). The commenter stated that damage to the fire seals or low stiffness

is the unsafe condition because either condition could allow increased airflow into the engine core compartment, which could reduce fire extinguishing concentrations. Boeing further stated that it has received no reports of damage to adjacent structure due to fire seal damage, but has received reports of damage to insulation blankets adjacent to the fire seal damage; it received no reports of damage with sealed blankets.

We agree to revise the unsafe condition statements for the reasons given, and have changed the Summary and paragraph (e) of this AD accordingly.

Request for Terminating Action Statement

American Airlines (AAL) requested that the NPRM (76 FR 71472, November 18, 2011) include a statement indicating that performing the required actions terminates the AD's requirements. AAL stated that fire seal inspections have regular maintenance requirements scheduled under Maintenance Review Board (MRB) items 78–090 and –100, which adequately monitor ongoing serviceability.

We agree with AAL's request for the reason given. We have added the words ''one-time,'' which accurately describes the general visual inspection required by paragraph (g) of this AD. Because paragraphs (g)(1) and (g)(2) refer to the paragraph (g) inspection, those paragraphs need no change.

Request To Extend the Compliance Time

AAL requested that the compliance time in paragraph (g) of the NPRM (76 FR 71472, November 18, 2011) be extended to 72 months from the date of the NPRM (76 FR 71472, November 18, 2011), rather than 36 months. AAL stated that the longer compliance time would eliminate an undue burden on operators by better coinciding with their heavy checks, and that the added time needed to replace or reseal the upper support flange on-wing affects their tighter C-check schedules. Further, the MRB seal inspections maintain an acceptable safety level.

We do not agree to extend the compliance time. The proposed compliance time of 36 months after the AD effective date, will be well after the manufacturer's recommended action time of 36 months after the original issue date of Boeing Special Attention Service Bulletin 737–78–1086, dated October 6, 2010.

In developing an appropriate compliance time for this action, we considered the urgency associated with the subject unsafe condition, the availability of required parts, and the practical aspect of accomplishing the required inspection within a period of time that corresponds to the normal scheduled maintenance for most affected operators. However, under the provisions of paragraph (j) of this final rule, we will consider requests for approval of an extension of the compliance time if sufficient data are submitted to substantiate that the new compliance time would provide an acceptable level of safety. We have not changed the AD in this regard.

Request To Change Cost Information

AAL requested that we increase the labor time in the ''Costs of Compliance'' section of the NPRM (76 FR 71472, November 18, 2011) to reflect the additional two work shifts needed for installation and cure time, plus the material cost of the new flange insulation. AAL stated that it prototyped the actions specified in Boeing Special Attention Service Bulletin 737–78–1086, dated October 6, 2010, and found that it added significant time to the light C-check, mostly due to a minimum of five work shifts to install and cure the flange insulation, during which time no rigging or operating of flight controls could be done.

We agree to revise the cost information as follows, based on the new service information discussed in the ''New Service Information'' section above: ''Labor cost'' increased to 28 work-hours (14 hours per engine), and ''Parts cost'' to $2,494 ($1,247 per engine). The ''on-condition costs'' remain unchanged.

Request To Include Later FAA-Approved Service Bulletin Revisions

AAL requested that we allow compliance by any later FAA-approved revisions to Boeing Special Attention Service Bulletin 737–78–1086, Revision 1, dated May 15, 2012.

We disagree to refer to later revisions to service information, because when referring to a specific service bulletin in an AD, we cannot use the phrase, ''or later FAA-approved revisions,'' due to Office of the Federal Register regulations for approving materials that are incorporated by reference. However, operators may request approval to use a later revision of the referenced service bulletin as an alternative method of compliance, under the provisions of paragraph (j) of the final rule. We have not changed the AD in this regard.

Request To Exclude Certain Parts of the Service Information

AAL stated that Boeing Special Attention Service Bulletin 737–78–1086, dated October 6, 2010, specifies actions that duplicate procedures given in the aircraft maintenance manual (AMM), or apply only to on-wing methods or not removing the thrust reverser, and requested that the NPRM (76 FR 71472, November 18, 2011) not mandate these actions for all airplanes and methods when they do not apply, or do not address the unsafe condition for that airplane. In one example, AAL described that if the thrust reverser is not removed, only the fire-seal compression check of AMM 78–31–12–4 or 87–31–01–5 (fire seal removal/installation, and thrust reverser adjustment/test, respectively) needs to be done, because the vee-blade depth and deflection limiter geometry do not change.

We do not agree to exclude certain actions specified in the Accomplishment Instructions of Boeing Special Attention Service Bulletin 737–78–1086, Revision 1, dated May 15, 2012, from the requirements of this AD. Those instructions do not address accomplishing the work off-wing, other than stating that it can be done. The thrust reverser adjustment is included in the steps regardless of how the seal flange is installed, because adding the additional material in the stack-up might affect part fit-up and ultimately require re-rigging prior to releasing the airplane into service. Further, the service bulletin only refers to the AMM procedures, which gives operators flexibility in doing the work due to particular maintenance procedures not being mandated. We have not changed the AD in this regard.

Request To Correct Errors in, or Refer to, Revised Service Information

AAL and Boeing submitted examples of errors in and corrections needed to Boeing Special Attention Service Bulletin 737–78–1086, dated October 6, 2010. AAL requested that the service information be corrected or revised, and Boeing requested that we incorporate Boeing Special Attention Service Bulletin 737–78–1086, Revision 1, dated May 15, 2012, which Boeing stated corrects the items it identified.

As discussed in the Revised Service Information section above, we agree to refer to the revised service information, including the two differences noted in that section.

Concern for Parts Availability

AAL stated that there needs to be sufficient stock of seals available to

support replacements resulting from inspections done within the proposed compliance time. AAL found that in December 2011, the Boeing parts page on the Internet showed no available stock of the required seals and did not show a standard lead time for them, but projected dates in February and March of 2012.

We infer that AAL requested that we delay issuing the AD until parts are available. We received information from Boeing that ample parts kits are now available to supply the fleet. We have not changed the AD in this regard.

Added Paragraph for Certain Alternative Methods of Compliance (AMOCs)

We added new paragraph (j)(3) to this AD to allow AMOC requests approved by Boeing's Organization Designation Authorization (ODA).

Conclusion

We reviewed the relevant data, considered the comments received, and determined that air safety and the public interest require adopting the AD with the changes described previously—and minor editorial changes. We have determined that these minor changes:

- Are consistent with the intent that was proposed in the NPRM/(76 FR 71472, November 18, 2011) for correcting the unsafe condition; and
- Do not add any additional burden upon the public than was already proposed in the NPRM/(76 FR 71472, November 18, 2011).

We also determined that these changes will not increase the economic burden on any operator or increase the scope of the AD.

Costs of Compliance

We estimate that this AD affects 968 airplanes of U.S. registry.

We estimate the following costs to comply with this AD:

ESTIMATED COSTS

Action	Labor cost	Parts cost	Cost per product	Cost on U.S. operators
General visual inspection and bracket installation.	28 work-hours × $85 per hour = $2,380	$2,494	$4,874	$4,718,032

We estimate the following costs to do necessary repairs and replacements that would be required based on the results of the inspection. We have no way of determining the number of aircraft that might need these repairs.

ON-CONDITION COSTS

Action	Labor cost	Parts cost	Cost per product
Drill vent holes (up to 8)	1 work-hour × $85 per hour = $85	$0	$85
Replace fire seal (up to 4)	8 work-hours × $85 per hour = $680	8,010	8,690

Authority for This Rulemaking

Title 49 of the United States Code specifies the FAA's authority to issue rules on aviation safety. Subtitle I, section 106, describes the authority of the FAA Administrator. Subtitle VII: Aviation Programs, describes in more detail the scope of the Agency's authority.

We are issuing this rulemaking under the authority described in Subtitle VII, Part A, Subpart III, Section 44701: ''General requirements.'' Under that section, Congress charges the FAA with promoting safe flight of civil aircraft in air commerce by prescribing regulations for practices, methods, and procedures the Administrator finds necessary for safety in air commerce. This regulation is within the scope of that authority because it addresses an unsafe condition that is likely to exist or develop on products identified in this rulemaking action.

Regulatory Findings

This AD will not have federalism implications under Executive Order 13132. This AD will not have a substantial direct effect on the States, on the relationship between the national government and the States, or on the distribution of power and responsibilities among the various levels of government.

For the reasons discussed above, I certify that this AD:

(1) Is not a ''significant regulatory action'' under Executive Order 12866,

(2) Is not a ''significant rule'' under DOT Regulatory Policies and Procedures (44 FR 11034, February 26, 1979),

(3) Will not affect intrastate aviation in Alaska, and

(4) Will not have a significant economic impact, positive or negative, on a substantial number of small entities under the criteria of the Regulatory Flexibility Act.

List of Subjects in 14 CFR Part 39

Air transportation, Aircraft, Aviation safety, Incorporation by reference, Safety.

Adoption of the Amendment

Accordingly, under the authority delegated to me by the Administrator, the FAA amends 14 CFR part 39 as follows:

PART 39—AIRWORTHINESS DIRECTIVES

■ 1. The authority citation for part 39 continues to read as follows:

Authority: 49 U.S.C. 106(g), 40113, 44701.

§ 39.13 [Amended]

■ 2. The FAA amends § 39.13 by adding the following new airworthiness directive (AD):

2013–08–01 The Boeing Company: Amendment 39–17418; Docket No. FAA–2011–1231; Directorate Identifier 2011–NM–088–AD.

(a) Effective Date

This AD is effective June 10, 2013.

(b) Affected ADs

None.

(c) Applicability

This AD applies to The Boeing Company Model 737–600, –700, –700C, –800, –900, and –900ER series airplanes; certificated in any category; line numbers 1 through 3028 inclusive.

(d) Subject

Joint Aircraft System Component (JASC)/Air Transport Association (ATA) of America Code 78, Engine exhaust.

(e) Unsafe Condition

This AD was prompted by reports of damaged upper fire seals on the forward edge of the thrust reversers. We are issuing this AD to detect and correct damage to the fire seals, which could allow airflow into the engine fire zone and could ultimately degrade the ability to extinguish an engine fire.

(f) Compliance

Comply with this AD within the compliance times specified, unless already done.

(g) Inspections and Corrective Actions

Within 36 months after the effective date of this AD: Do a one-time general visual inspection of the left and right thrust reverser halves of each engine for damage to the upper fire seal, for stiffness of the upper fire seal, and for missing vent holes as applicable, in accordance with paragraph 3.B. of the Accomplishment Instructions of Boeing Special Attention Service Bulletin 737–78–1086, Revision 1, dated May 15, 2012, except as required by paragraph (h) of this AD.

(1) If, during the inspection required by paragraph (g) of this AD, no upper fire seal damage is found, and the fire seal has the correct stiffness: Before further flight, drill vent holes if they are missing, and install a new bracket behind the upper fire seal retainer, in accordance with paragraph 3.B. of the Accomplishment Instructions of Boeing Special Attention Service Bulletin 737–78–1086, Revision 1, dated May 15, 2012.

(2) If, during the inspection required by paragraph (g) of this AD, upper fire seal damage or insufficient fire seal stiffness is found: Before further flight, install a new upper fire seal, drill vent holes if they are missing, and install a new bracket behind the upper fire seal retainer, in accordance with paragraph 3.B. of the Accomplishment Instructions of Boeing Special Attention Service Bulletin 737–78–1086, Revision 1, dated May 15, 2012, except as required by paragraph (h) of this AD.

(h) Exceptions to Required Service Information

Where this AD refers to Boeing Special Attention Service Bulletin 737–78–1086, Revision 1, dated May 15, 2012, the following exceptions apply.

(1) In that service bulletin, where Note row (a) of the table shown in Figure 10 refers to ''(a)'', it should instead refer to Note row (b).

(2) Figures 1 and 3 of this AD, titled ''Fastener Removal of the Retainer Support on the Left (Right) Thrust Reverser Half,'' have View B showing the top fastener in the center of three adjustable sustained preload (ASP) fasteners. That top fastener does not require removal in order to remove the retainer. The figures in this AD point to the correct information for those fasteners.

(3) Figures 2 and 4 of this AD, titled ''Installation of the New Bracket behind the Retainer Support on the Left (Right) Thrust Reverser Half,'' have View B showing the top rivet hole. That rivet hole is actually below the row of three ASP fasteners. The figures in this AD point to the correct information for those rivet holes.

BILLING CODE 4910–13–P

Figure 1, Fastener Removal of the Retainer Support on the Left Thrust Reverser Half

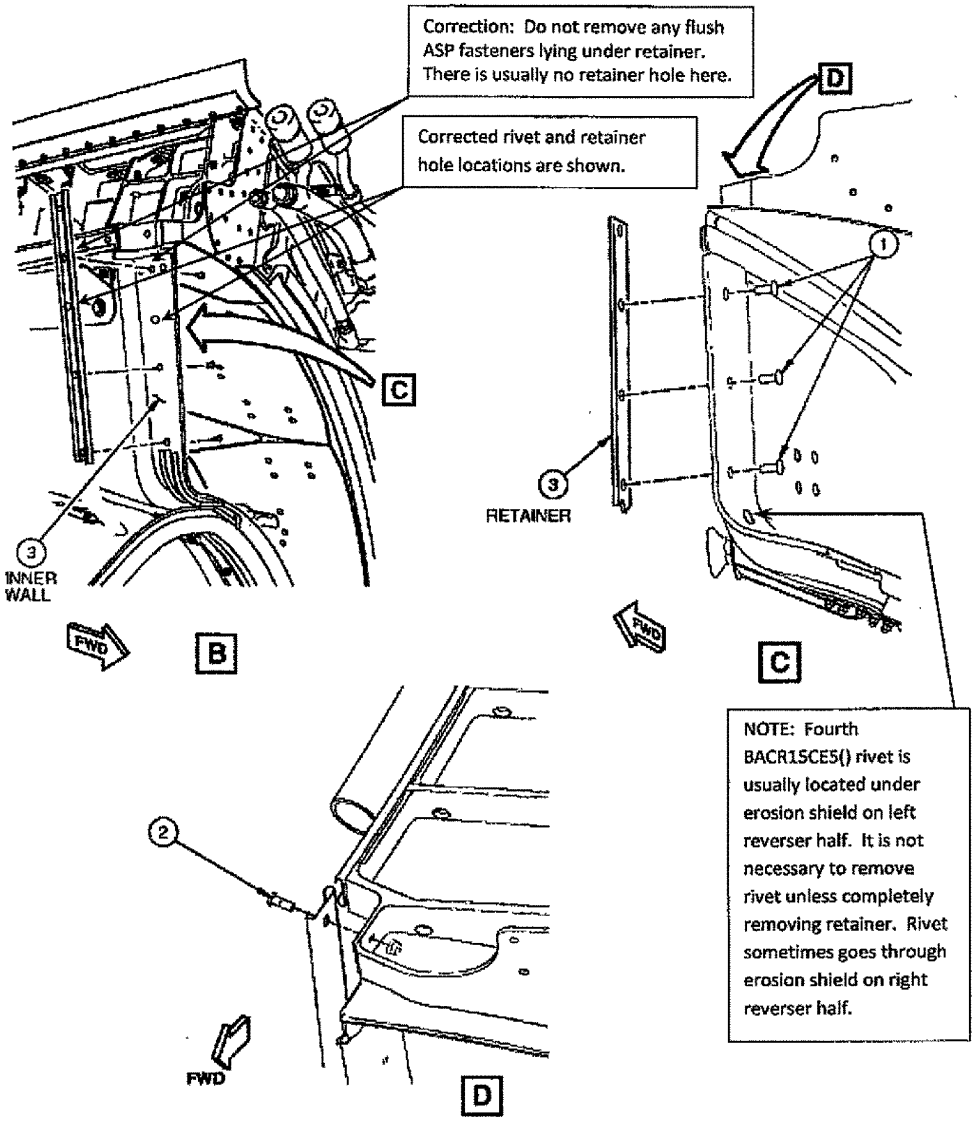

Figure 2, Installation of the New Bracket behind the Retainer Support on the Left Thrust Reverser Half

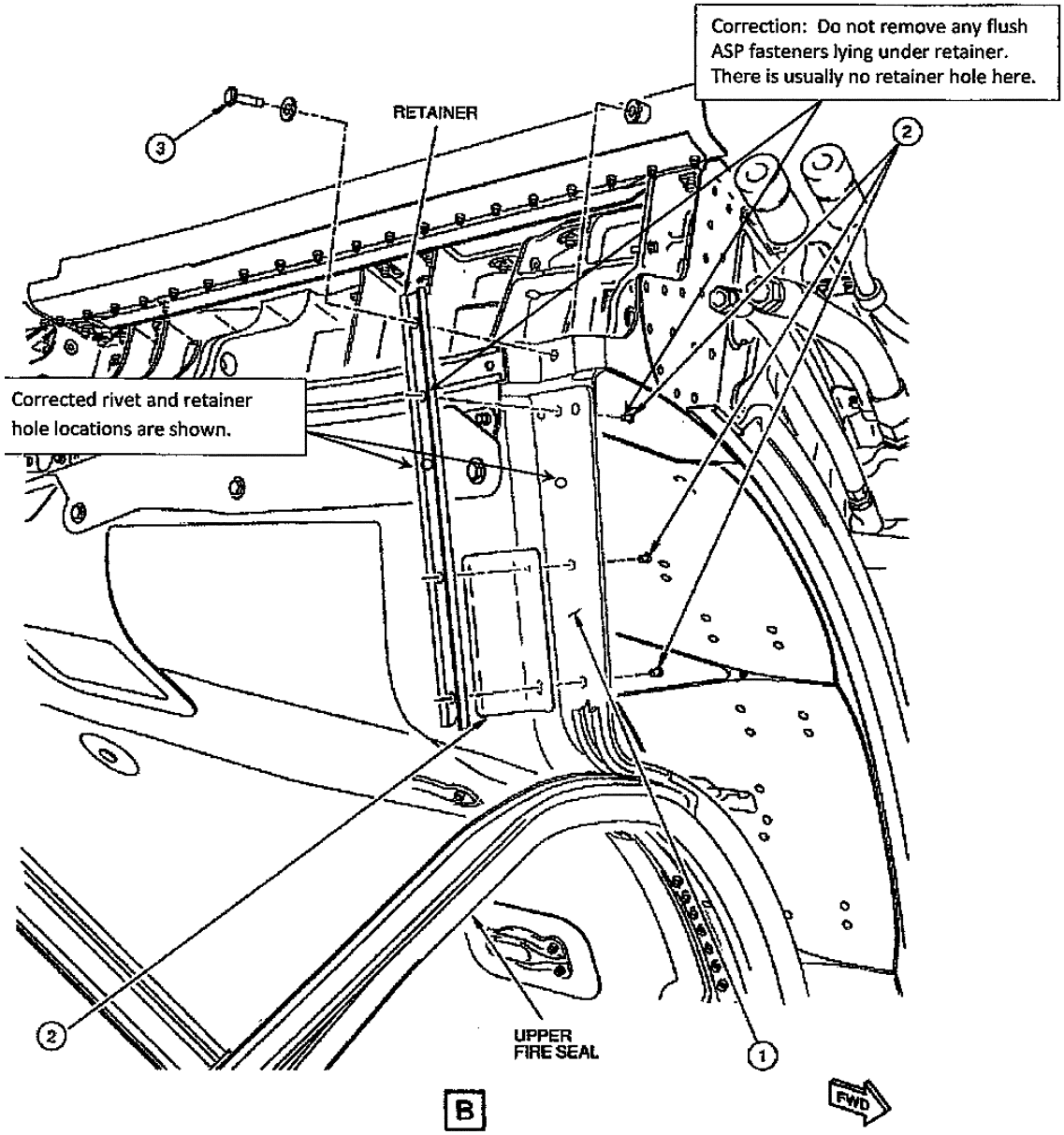

Figure 3, Fastener Removal of the Retainer Support on the Right Thrust Reverser Half

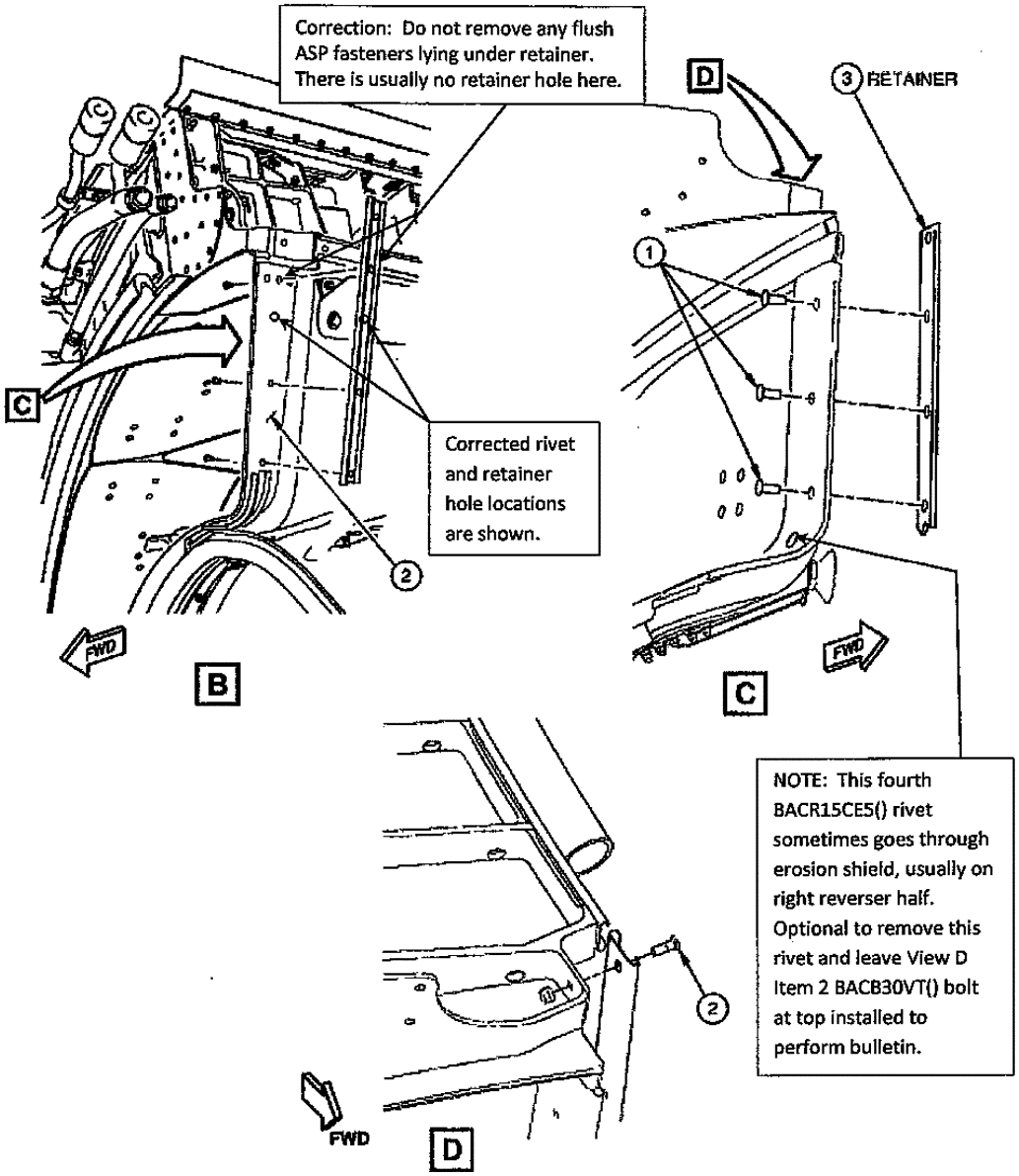

Figure 4, Installation of the New Bracket behind the Retainer Support on the Right Thrust Reverser Half

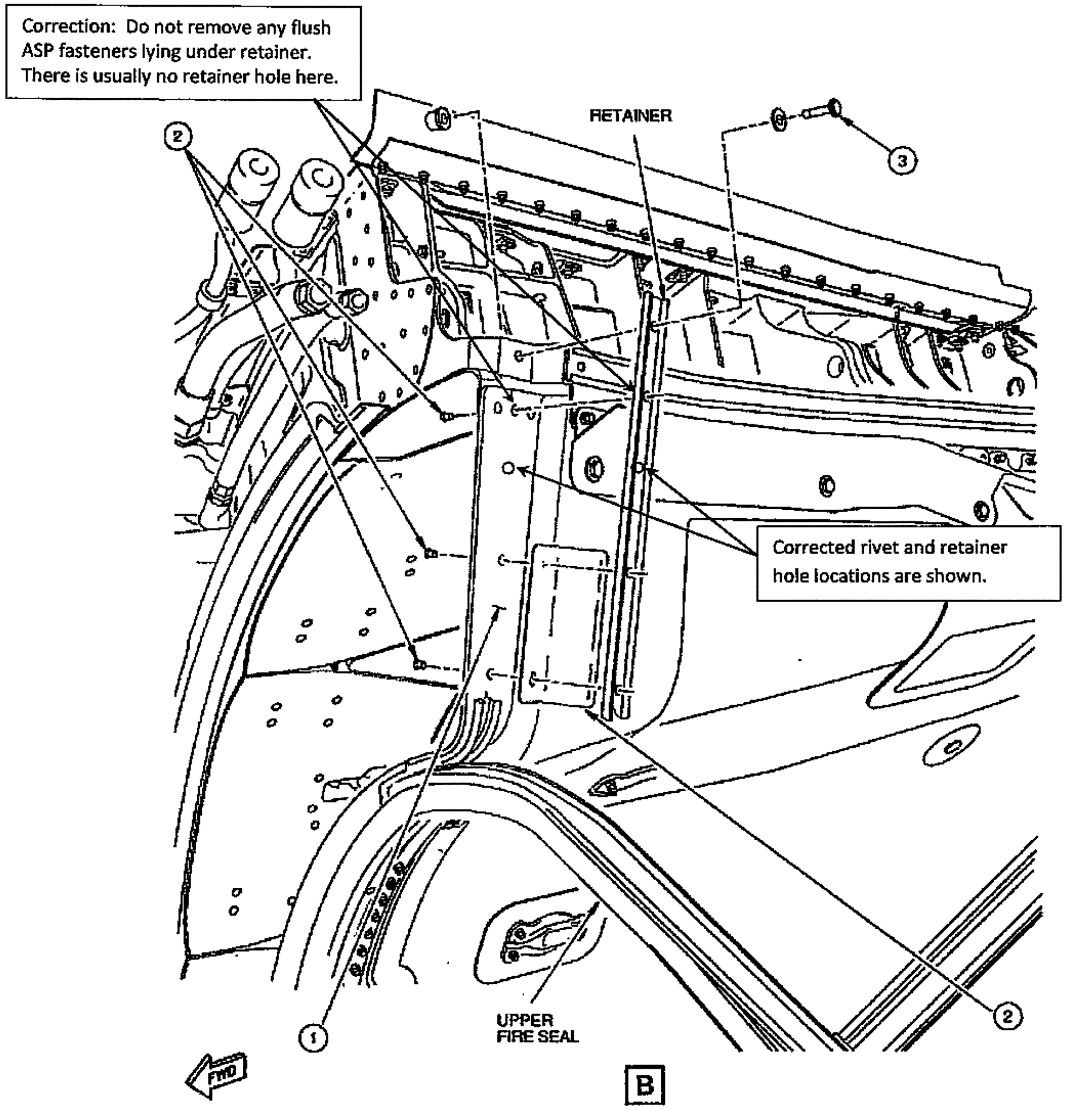

(i) Credit for Previous Actions

This paragraph provides credit for actions required by paragraphs (g), (g)(1), and (g)(2) of this AD, if those actions were performed before the effective date of this AD using Boeing Special Attention Service Bulletin 737–78–1086, dated October 6, 2010, which is not incorporated by reference in this AD.

(j) Alternative Methods of Compliance (AMOCs)

(1) The Manager, Seattle Aircraft Certification Office (ACO), FAA, has the authority to approve AMOCs for this AD, if requested using the procedures found in 14 CFR 39.19. In accordance with 14 CFR 39.19, send your request to your principal inspector or local Flight Standards District Office, as appropriate. If sending information directly to the manager of the ACO, send it to the attention of the person identified in the Related Information section of this AD. Information may be emailed to: *9-ANM-Seattle-ACO-AMOC-Requests@faa.gov.*

(2) Before using any approved AMOC, notify your appropriate principal inspector, or lacking a principal inspector, the manager of the local flight standards district office/ certificate holding district office.

(3) An AMOC that provides an acceptable level of safety may be used for any repair required by this AD if it is approved by the Boeing Commercial Airplanes Organization Designation Authorization (ODA) that has been authorized by the Manager, Seattle ACO, to make those findings. For a repair method to be approved, the repair must meet the certification basis of the airplane, and the approval must specifically refer to this AD.

(k) Related Information

For more information about this AD, contact Sue Lucier, Aerospace Engineer, Propulsion Branch, ANM–140S, FAA, Seattle Aircraft Certification Office, 1601 Lind Avenue SW., Renton, Washington 98057–3356; phone: 425–917–6438; fax: 425–917–6590; email: *Suzanne.Lucier@faa.gov.*

For service information identified in this AD, contact Boeing Commercial Airplanes, Attention: Data & Services Management, P.O. Box 3707, MC 2H–65, Seattle, Washington 98124–2207; telephone 206–544–5000, extension 1; fax 206–766–5680; Internet *https://www.myboeingfleet.com.*

(l) Material Incorporated by Reference

(1) The Director of the Federal Register approved the incorporation by reference (IBR) of the service information listed in this paragraph under 5 U.S.C. 552(a) and 1 CFR part 51.

(2) You must use this service information as applicable to do the actions required by this AD, unless the AD specifies otherwise.

(i) Boeing Special Attention Service Bulletin 737–78–1086, Revision 1, dated May 15, 2012.

(ii) Reserved.

(3) For service information identified in this AD, contact Boeing Commercial Airplanes, Attention: Data & Services Management, P.O. Box 3707, MC 2H–65, Seattle, Washington 98124–2207; telephone 206–544–5000, extension 1; fax 206–766–5680; Internet *https://www.myboeingfleet.com.*

(4) You may view this service information at FAA, Transport Airplane Directorate, 1601 Lind Avenue SW., Renton, Washington. For information on the availability of this material at the FAA, call 425–227–1221.

(5) You may view this service information that is incorporated by reference at the National Archives and Records Administration (NARA). For information on the availability of this material at NARA, call 202–741–6030, or go to: *http://www.archives.gov/federal-register/cfr/ibr-locations.html.*

Issued in Renton, Washington, on April 3, 2013.

Ali Bahrami,

Manager, Transport Airplane Directorate, Aircraft Certification Service.

[FR Doc. 2013–08992 Filed 5–3–13; 8:45 am]

BILLING CODE 4910–13–P

DEPARTMENT OF TRANSPORTATION

Federal Aviation Administration

14 CFR Part 39

[Docket No. FAA–2012–1172; Directorate Identifier 2012–CE–040–AD; Amendment 39–17447; AD 2013–04–08 R1]

RIN 2120–AA64

Airworthiness Directives; Diamond Aircraft Industries GmbH Powered Gliders

AGENCY: Federal Aviation Administration (FAA), DOT.

ACTION: Final rule; request for comments.

SUMMARY: We are revising an airworthiness directive (AD) for certain Diamond Aircraft Industries GmbH Models HK 36 R, HK 36 TS, and HK 36 TTS powered gliders. AD 2013–04–08 required replacement of each elevator bell crank assembly and elevator bell crank mount. This AD retains the actions of AD 2013–04–08 but decreases gliders in the Applicability by removing the Model H–36 from the Applicability. This AD was prompted by reports of installation of an unsuitable self-locking nut on the bell crank of the elevator push rod that can cause failure of the elevator, resulting in loss of control. We are issuing this AD to correct the unsafe condition on these products.

DATES: This final rule is effective May 6, 2013.

The Director of the Federal Register approved the incorporation by reference of certain publications listed in this AD as of April 9, 2013 (78 FR 14160, March 5, 2013).

We must receive any comments on this AD by June 20, 2013.

ADDRESSES: You may send comments by any of the following methods:

- *Federal eRulemaking Portal:* Go to *http://www.regulations.gov*. Follow the instructions for submitting comments.
- *Fax:* 202–493–2251.
- *Mail:* U.S. Department of Transportation, Docket Operations, M–30, West Building Ground Floor, Room W12–140, 1200 New Jersey Avenue SE., Washington, DC 20590.
- *Hand Delivery:* U.S. Department of Transportation, Docket Operations, M–30, West Building Ground Floor, Room W12–140, 1200 New Jersey Avenue SE., Washington, DC 20590, between 9 a.m. and 5 p.m., Monday through Friday, except Federal holidays.

For service information identified in this AD, Diamond Aircraft Industries GmbH, N.A. Otto-Straße 5, A–2700 Wiener Neustadt, Austria, telephone: +43 2622 26700; fax: +43 2622 26780; email: *office@diamond-air.at*; Internet: *www.diamond-air.at/hk36_super_dimona+M52087573ab0.html*. You may review copies of the referenced service information at the FAA, Small Airplane Directorate, 901 Locust, Kansas City, Missouri 64106. For information on the availability of this material at the FAA, call (816) 329–4148.

Examining the AD Docket

You may examine the AD docket on the Internet at *http://www.regulations.gov;* or in person at the Docket Management Facility between 9 a.m. and 5 p.m., Monday through Friday, except Federal holidays. The AD docket contains this AD, the regulatory evaluation, any comments received, and other information. The street address for the Docket Office (phone: 800–647–5527) is in the **ADDRESSES** section. Comments will be available in the AD docket shortly after receipt.

FOR FURTHER INFORMATION CONTACT: Mike Kiesov, Aerospace Engineer, FAA, Small Airplane Directorate, 901 Locust, Room 301, Kansas City, Missouri 64106; telephone: (816) 329–4144; fax: (816) 329–4090; email: *mike.kiesov@faa.gov*.

SUPPLEMENTARY INFORMATION:

Discussion

On February 14, 2013, we issued AD 2013–04–08, amendment 39–17365 (78 FR 14160, March 5, 2013), for all Diamond Aircraft Industries GmbH Models HK 36 R, HK 36 TS, and HK 36 TTS powered gliders. That AD requires replacement of the elevator bell crank assembly and elevator bell crank mount. That AD resulted from installation of an unsuitable self-locking nut on the bell crank of the elevator push rod that can cause failure of the elevator, resulting in loss of control. We issued that AD to require actions to address the unsafe condition on these products.

Actions Since AD Was Issued

Since we issued AD 2013–04–08 (78 FR 14160, March 5, 2013), it was determined that Model H–36 airplanes do not have the elevator control and bellcrank assembly part numbers associated with the unsafe condition of this AD. Since Model H–36 airplanes do not have the unsafe condition, it is not necessary or possible for those airplanes to comply with this AD, so we are removing the Model H–36 from the Applicability section.

Relevant Service Information

We reviewed Diamond Aircraft Industries GmbH Mandatory Service Bulletin MSB 36–108, dated February 28, 2012; and Diamond Aircraft

Industries GmbH Work Instruction WI–MSB 36–108, dated February 28, 2012. The service information describes procedures for replacement of the elevator bell crank assembly and elevator bell crank mount.

FAA's Determination

We are issuing this AD because we evaluated all the relevant information and determined it is not necessary or possible for Diamond Aircraft Industries GmbH Model H–36 airplanes to comply with the previous AD.

AD Requirements

This AD requires accomplishing the actions specified in the service information described previously.

Change to Existing AD

This AD would retain all requirements of 2013–04–08 (78 FR 14160, March 5, 2013), but decrease the Applicability by removing Model H–36.

FAA's Justification and Determination of the Effective Date

An unsafe condition exists that requires the immediate adoption of this AD. The FAA has found that the risk to the flying public justifies waiving notice and comment prior to adoption of this rule because the Diamond Model H–36 does not have the same elevator control and bell crank assembly. It is not necessary and not possible for these powered gliders to comply with the AD action items. Therefore, we find that notice and opportunity for prior public comment are unnecessary and that good cause exists for making this amendment effective in less than 30 days.

Comments Invited

This AD is a final rule that involves requirements affecting flight safety, and we did not provide you with notice and an opportunity to provide your comments before it becomes effective. However, we invite you to send any written data, views, or arguments about this AD. Send your comments to an address listed under the **ADDRESSES** section. Include the docket number FAA–2012–1172 and directorate identifier 2012–CE–040–AD at the beginning of your comments. We specifically invite comments on the overall regulatory, economic, environmental, and energy aspects of this AD. We will consider all comments received by the closing date and may amend this AD because of those comments.

We will post all comments we receive, without change, to *http://www.regulations.gov,* including any personal information you provide. We will also post a report summarizing each substantive verbal contact we receive about this AD.

Costs of Compliance

We estimate that this AD will affect 25 products of U.S. registry. We also estimate that it would take about 2 work-hours per product to comply with the basic requirements of this AD. The average labor rate is $85 per work-hour. Required parts would cost about $352 per product.

Based on these figures, we estimate the cost of this AD on U.S. operators to be $13,050, or $522 per product.

Authority for This Rulemaking

Title 49 of the United States Code specifies the FAA's authority to issue rules on aviation safety. Subtitle I, Section 106, describes the authority of the FAA Administrator. Subtitle VII, Aviation Programs, describes in more detail the scope of the Agency's authority.

We are issuing this rulemaking under the authority described in Subtitle VII, Part A, Subpart III, Section 44701, ''General requirements.'' Under that section, Congress charges the FAA with promoting safe flight of civil aircraft in air commerce by prescribing regulations for practices, methods, and procedures the Administrator finds necessary for safety in air commerce. This regulation is within the scope of that authority because it addresses an unsafe condition that is likely to exist or develop on products identified in this rulemaking action.

Regulatory Findings

This AD will not have federalism implications under Executive Order 13132. This AD will not have a substantial direct effect on the States, on the relationship between the national government and the States, or on the distribution of power and responsibilities among the various levels of government.

For the reasons discussed above, I certify that this AD:

(1) Is not a ''significant regulatory action'' under Executive Order 12866,

(2) Is not a ''significant rule'' under DOT Regulatory Policies and Procedures (44 FR 11034, February 26, 1979),

(3) Will not affect intrastate aviation in Alaska, and

(4) Will not have a significant economic impact, positive or negative, on a substantial number of small entities under the criteria of the Regulatory Flexibility Act.

List of Subjects in 14 CFR Part 39

Air transportation, Aircraft, Aviation safety, Incorporation by reference, Safety.

Adoption of the Amendment

Accordingly, under the authority delegated to me by the Administrator, the FAA amends part 39 of the Federal Aviation Regulations (14 CFR part 39) as follows:

PART 39—AIRWORTHINESS DIRECTIVES

■ 1. The authority citation for part 39 continues to read as follows:

Authority: 49 U.S.C. 106(g), 40113, 44701.

§ 39.13 [Amended]

■ 2. The FAA amends § 39.13 by removing airworthiness directive (AD) 2013–04–08 (78 FR 14160, March 5, 2013) and adding the following new AD:

2013–04–08 R1 Diamond Aircraft Industries GmbH: Amendment 39–17447; Docket No. FAA–2012–1172; Directorate Identifier 2012–CE–040–AD.

(a) Effective Date

This AD is effective May 6, 2013.

(b) Affected ADs

This AD revises AD 2013–04–08 (78 FR 14160, March 5, 2013), Amendment 39–17365.

(c) Applicability

This AD applies to the following Diamond Aircraft Industries GmbH models and serial number (S/N) powered gliders, certificated in any category: HK 36 R powered gliders, S/Ns 36.300 through 36.414; HK 36 TS powered gliders, S/Ns 36.415 and 36.416; and HK 36 TTS powered gliders, S/N 36.393.

(d) Subject

Joint Aircraft System Component (JASC)/Air Transport Association (ATA) Code 27: Flight Controls.

(e) Unsafe Condition

This AD was prompted by reports of installation of an unsuitable self-locking nut on the bell crank of the elevator push rod that can cause failure of the elevator, resulting in loss of control. We are issuing this revised AD because we evaluated all the relevant information and determined it is not necessary or possible for the Diamond Aircraft Industries GmbH Model H–36 to comply with the previous AD. Installation of an unsuitable self-locking nut on the bell crank of the elevator push rod that can cause failure of the elevator, resulting in loss of control.

(f) Actions and Compliance

Unless already done, do the following actions specified in paragraphs (f)(1) and (f)(2) of this AD following Diamond Aircraft Industries GmbH Mandatory Service Bulletin MSB 36–108 and Diamond Aircraft

Industries GmbH Work Instruction WI–MSB 36–108, both dated February 28, 2012:

(1) Within the next 200 hours time-in-service (TIS) after April 9, 2013, (the effective date retained from AD 2013–04–08, Amendment 39–17365 (78 FR 14160, March 5, 2013)) or within the next 12 months after April 9, 2013, (the effective date retained from AD 2013–04–08, Amendment 39–17365 (78 FR 14160, March 5, 2013)), whichever occurs first, replace each elevator bell crank assembly with part number (P/N) 820–2730–12–00, and replace each elevator bell crank mount with P/N 820–2730–11–00.

(2) After April 9, 2013, (the effective date retained from AD 2013–04–08, Amendment 39–17365 (78 FR 14160, March 5, 2013)), only install on the powered glider elevator bell crank assemblies with P/N 820–2730–12–00 and elevator bell crank mounts with P/N 820–2730–11–00.

(g) Alternative Methods of Compliance (AMOCs)

(1) The Manager, Standards Office, FAA, has the authority to approve AMOCs for this AD, if requested using the procedures found in 14 CFR 39.19. Send information to ATTN: Mike Kiesov, Aerospace Engineer, FAA, Small Airplane Directorate, 901 Locust, Room 301, Kansas City, Missouri 64106; telephone: (816) 329–4144; fax: (816) 329–4090; email: *mike.kiesov@faa.gov.*

(2) Before using any approved AMOC, notify your appropriate principal inspector, or lacking a principal inspector, the manager of the local flight standards district office/certificate holding district office.

(h) Related Information

For more information about this AD, contact Mike Kiesov, Aerospace Engineer, FAA, Small Airplane Directorate, 901 Locust, Room 301, Kansas City, Missouri 64106; telephone: (816) 329–4144; fax: (816) 329–4090; email: *mike.kiesov@faa.gov.*

(i) Material Incorporated by Reference

(1) The Director of the Federal Register approved the incorporation by reference (IBR) of the service information listed in this paragraph under 5 U.S.C. 552(a) and 1 CFR part 51.

(2) You must use this service information as applicable to do the actions required by this AD, unless the AD specifies otherwise.

(3) The following service information was approved for IBR on April 9, 2013 (78 FR 14160, March 5, 2013).

(i) Diamond Aircraft Industries GmbH Mandatory Service Bulletin MSB 36–108, dated February 28, 2012.

(ii) Diamond Aircraft Industries GmbH Work Instruction WI–MSB 36–108, dated February 28, 2012.

(4) For Diamond Aircraft Industries GmbH service information identified in this AD, contact Diamond Aircraft Industries GmbH, N.A. Otto-Straße 5, A–2700 Wiener Neustadt, Austria, telephone: +43 2622 26700; fax: +43 2622 26780; email: *office@diamond-air.at;* Internet: *www.diamond-air.at/hk36_super_dimona+M52087573ab0.html.*

(5) You may view this service information at FAA, Small Airplane Directorate, 901 Locust, Kansas City, Missouri 64106. For information on the availability of this material at the FAA, call (816) 329–4148.

(6) You may view this service information that is incorporated by reference at the National Archives and Records Administration (NARA). For information on the availability of this material at NARA, call 202–741–6030, or go to: *http://www.archives.gov/federal-register/cfr/ibr-locations.html.*

Issued in Kansas City, Missouri, on April 24, 2013.

Earl Lawrence,

Manager, Small Airplane Directorate, Aircraft Certification Service.

[FR Doc. 2013–10270 Filed 5–3–13; 8:45 am]

BILLING CODE 4910–13–P

DEPARTMENT OF TRANSPORTATION

Federal Aviation Administration

14 CFR Part 71

[Docket No. FAA–2012–0394; Airspace Docket No. 12–AEA–8]

Amendment of Class E Airspace; Easton, PA

AGENCY: Federal Aviation Administration (FAA), DOT.

ACTION: Final rule.

SUMMARY: This action amends Class E Airspace at Easton, PA, as the Allentown VORTAC has been decommissioned and new Standard Instrument Approach Procedures have been developed at Braden Airpark. This action enhances the safety and management of Instrument Flight Rules (IFR) operations at the airport. This action also recognizes the airport's name change and updates the geographic coordinates of the airport.

DATES: Effective 0901 UTC, June 27, 2013. The Director of the Federal Register approves this incorporation by reference action under title 1, Code of Federal Regulations, part 51, subject to the annual revision of FAA Order 7400.9 and publication of conforming amendments.

FOR FURTHER INFORMATION CONTACT: John Fornito, Operations Support Group, Eastern Service Center, Federal Aviation Administration, P.O. Box 20636, Atlanta, Georgia 30320; telephone (404) 305–6364.

SUPPLEMENTARY INFORMATION:

History

On January 24, 2013, the FAA published in the **Federal Register** a notice of proposed rulemaking (NPRM) to amend Class E airspace at Easton, PA (78 FR 5152) Docket No. FAA–2012–0394. Interested parties were invited to participate in this rulemaking effort by submitting written comments on the proposal to the FAA. No comments were received. Class E airspace designations are published in paragraph 6005 of FAA Order 7400.9W dated August 8, 2012, and effective September 15, 2012, which is incorporated by reference in 14 CFR Part 71.1. The Class E airspace designations listed in this document will be published subsequently in the Order.

The Rule

This amendment to Title 14, Code of Federal Regulations (14 CFR) part 71 amends the Class E airspace extending upward from 700 feet above the surface at Easton, PA to accommodate the new Standard Instrument Approach Procedures developed for Braden Airpark. The Allentown VORTAC has been decommissioned, and the VOR/DME approach cancelled. The controlled airspace area is increased to within an 8.2-mile radius of the airport due to terrain in the surrounding area. Also, the airport name is changed from Easton Airport to Braden Airpark, and the geographic coordinates of the airport are adjusted to coincide with the FAA's aeronautical database. Also, the sentence in the regulatory text referencing the effectiveness of the airspace from sunrise to sunset, daily, is removed. Except for editorial changes and the changes noted above, this rule is the same as published in the NPRM.

The FAA has determined that this regulation only involves an established body of technical regulations for which frequent and routine amendments are necessary to keep them operationally current, is non-controversial and unlikely to result in adverse or negative comments. It, therefore, (1) is not a ''significant regulatory action'' under Executive Order 12866; (2) is not a ''significant rule'' under DOT Regulatory Policies and Procedures (44 FR 11034; February 26, 1979); and (3) does not warrant preparation of a Regulatory Evaluation as the anticipated impact is so minimal. Since this is a routine matter that will only affect air traffic procedures and air navigation, it is certified that this rule, when promulgated, will not have a significant economic impact on a substantial number of small entities under the criteria of the Regulatory Flexibility Act.

The FAA's authority to issue rules regarding aviation safety is found in Title 49 of the United States Code. Subtitle I, Section 106 describes the authority of the FAA Administrator. Subtitle VII, Aviation Programs, describes in more detail the scope of the agency's authority. This rulemaking is

promulgated under the authority described in Subtitle VII, Part A, Subpart I, Section 40103. Under that section, the FAA is charged with prescribing regulations to assign the use of airspace necessary to ensure the safety of aircraft and the efficient use of airspace. This regulation is within the scope of that authority as it amends controlled airspace at Braden Airpark, Easton, PA.

Environmental Review

The FAA has determined that this action qualifies for categorical exclusion under the National Environmental Policy Act in accordance with FAA Order 1050.1E, ''Environmental Impacts: Policies and Procedures,'' paragraph 311a. This airspace action is not expected to cause any potentially significant environmental impacts, and no extraordinary circumstances exist that warrant preparation of an environmental assessment.

Lists of Subjects in 14 CFR Part 71:

Airspace, Incorporation by reference, Navigation (air).

Adoption of the Amendment

In consideration of the foregoing, the Federal Aviation Administration amends 14 CFR part 71 as follows:

PART 71—DESIGNATION OF CLASS A, B, C, D AND E AIRSPACE AREAS; AIR TRAFFIC SERVICE ROUTES; AND REPORTING POINTS

■ 1. The authority citation for Part 71 continues to read as follows:

Authority: 49 U.S.C. 106(g); 40103, 40113, 40120; E.O. 10854, 24 FR 9565, 3 CFR, 1959–1963 Comp., p. 389.

§ 71.1 [Amended]

■ 2. The incorporation by reference in 14 CFR 71.1 of Federal Aviation Administration Order 7400.9W, Airspace Designations and Reporting Points, dated August 8, 2012, effective September 15, 2012, is amended as follows:

Paragraph 6005 Class E Airspace Areas Extending Upward From 700 feet or More Above the Surface of the Earth.

* * * * *

AEA PA E5 Easton, PA [Amended]

Braden Airpark, Easton, PA

(Lat. 40°44′32″ N., long. 75°14′35″ W.)

That airspace extending upward from 700 feet above the surface within an 8.2-mile radius of Braden Airpark.

Issued in College Park, Georgia, on April 22, 2013.

Barry A. Knight,

Manager, Operations Support Group, Eastern Service Center, Air Traffic Organization.

[FR Doc. 2013–10539 Filed 5–3–13; 8:45 am]

BILLING CODE 4910–13–P

DEPARTMENT OF THE TREASURY

Internal Revenue Service

26 CFR Parts 301 and 602

[TD 9617]

RIN 1545–BK02

Updating of Employer Identification Numbers

AGENCY: Internal Revenue Service (IRS), Treasury.

ACTION: Final regulations.

SUMMARY: This document contains final regulations that require any person assigned an employer identification number (EIN) to provide updated information to the IRS in the manner and frequency prescribed by forms, instructions, or other appropriate guidance. These regulations affect persons with EINs and will enhance the IRS's ability to maintain accurate information as to persons assigned EINs.

DATES: *Effective date:* These regulations are effective on May 6, 2013.

Applicability date: For date of applicability, see § 301.6109–1(d)(2)(ii)(B).

FOR FURTHER INFORMATION CONTACT: David Skinner, (202) 622–4940 (not a toll-free number).

SUPPLEMENTARY INFORMATION:

Paperwork Reduction Act

The collection of information contained in the final regulations has been reviewed and approved by the Office of Management and Budget in accordance with the Paperwork Reduction Act of 1995 (44 U.S.C. 3507(d)) under control number 1545–2242.

The collection of information in the final regulations is in § 301.6109–1(d)(2)(ii)(A). The collection of this information is necessary to allow the IRS to gather correct application information with respect to persons that have EINs. The respondents are persons that have EINs.

An agency may not conduct or sponsor, and a person is not required to respond to, a collection of information unless it displays a valid control number assigned by the Office of Management and Budget.

Books or records relating to a collection of information must be retained as long as their contents may become material in the administration of any internal revenue law. Generally, tax returns and tax return information are confidential, as required by section 6103 of the Internal Revenue Code.

Background

This document contains final amendments to the Procedure and Administration Regulations (26 CFR part 301) under section 6109 of the Internal Revenue Code relating to identifying numbers. The Department of Treasury and the IRS published a notice of proposed rulemaking (REG–135491–10) in the **Federal Register**, 77 FR 15004, on March 14, 2012, requiring persons issued EINs to provide updated application information to the IRS. The IRS did not receive any requests for a public hearing. Written comments responding to the proposed regulations were received and are available for public inspection at *http://www.regulations.gov* or upon request. After consideration of all the comments, the proposed regulations are adopted without amendment by this Treasury decision.

Summary of Comments

The IRS received four written comments in response to the proposed regulations. One comment supported the rule in the proposed regulations requiring any person issued an EIN to provide updated information to the IRS in the manner and frequency required by forms, instructions, or other appropriate guidance (including updated application information regarding the name and taxpayer identifying number of the responsible party). This commentator also recommended changes to either the Form SS–4, Application for Employer Identification Number, or the Form 5500, Annual Returns/Reports of Employee Benefit Plan, to require additional information confirming the active status of a trust's EIN. Alternatively, the commentator suggested that the IRS could use a postcard to confirm the active status of trusts for EIN purposes. Although these suggestions are outside the scope of the regulations, the IRS will take them into consideration during future updates of those items.

Three of the comments did not support the rule in the proposed regulations. Two commentators objected to the increased burden on entities resulting from the updating requirement and questioned the necessity of this requirement. Additionally, two

commentators suggested that the estimated annual average burden of 15 minutes provided in the Paperwork Reduction Act section of the proposed regulations underestimated the actual burden to entities and their agents. One commentator also argued that this rule is ''material'' because the related costs could reach over $100,000,000. Treasury and the IRS have considered these comments and, for the following reasons, these final regulations adopt the proposed regulations without change.

Treasury and the IRS continue to conclude that updating this application information is necessary for effective tax administration. Some EIN applicants continue to list individuals temporarily authorized to act on behalf of EIN applicants (sometimes referred to as ''nominees'') as principal officers, general partners, grantors, owners, and trustors on EIN applications. The listing of nominees or other individuals who are no longer associated with the entity prevents the IRS from gathering and maintaining correct and current information with respect to the responsible party for the EIN applicant. The requirement in the final regulations to provide updated application information will allow the IRS to ascertain the true responsible party for persons who have an EIN. This knowledge will prevent unnecessary delays by allowing the IRS to contact the correct persons when resolving a tax matter related to a business with an EIN. In addition, this information will help the IRS combat schemes that abuse the tax system through the use of nominees, which results in the concealing of the true responsible party for entities that hide assets and income.

Treasury and the IRS also conclude that the costs related to this rule are not ''material,'' any associated burden on entities resulting from this requirement is minimal, and the costs and burden are outweighed by the benefits to tax administration described in the previous paragraph. An entity with an EIN will always know the identity of its appropriate responsible party, which is generally defined as the individual with the authority to control, manage, or direct the entity and the disposition of its funds and assets. The updating requirement in these final regulations requires entities to keep the IRS informed of the identity of the responsible party.

The 15 minute burden estimate provided in the Paperwork Reduction Act section of the proposed regulations is an estimate of the burden in reporting and disclosing the correct application information to the IRS, not the burden an entity or its agent may incur in determining this information (which, as noted, is minimal because an entity will always know the identity of its responsible party). Following the publication of these final regulations, the IRS will publish the relevant form for persons issued an EIN to use to disclose the correct application information to the IRS. The relevant form will require these persons to update application information regarding the name and taxpayer identifying number of the responsible party within the applicable timeframe. Treasury and the IRS have determined that the amount of time necessary to fill out the relevant form and submit it to the IRS is minimal.

These final regulations are applicable as of January 1, 2014, so that the IRS can publish the relevant form and instructions in advance of the applicability date.

Special Analyses

It has been determined that these final rules are not a significant regulatory action as defined in Executive Order 12866, as supplemented by Executive Order 13563. Therefore, a regulatory assessment is not required. It also has been determined that section 553(b) of the Administrative Procedure Act (5 U.S.C. chapter 5) does not apply to these final regulations.

When an agency issues a rulemaking, the Regulatory Flexibility Act (RFA) (5 U.S.C. chapter 6) requires the agency to ''prepare and make available for public comment an initial regulatory flexibility analysis'' that will ''describe the impact of the proposed rule on small entities.'' (5 U.S.C. 603(a)). Section 605 of the RFA provides an exception to this requirement if the agency certifies that the proposed rulemaking will not have a significant economic impact on a substantial number of small entities.

The rules affect entities that have an EIN and the IRS has determined that these rules will have an impact on a substantial number of small entities. The IRS has determined, however, that the impact on entities affected by the rules will not be significant. The current Form SS–4, Application for Employer Identification Number, requires entities to disclose the name of the EIN applicant's ''responsible party'' and the responsible party's Social Security Number, Individual Taxpayer Identification Number, or EIN. Employers are required to know the identity of their responsible party. The amount of time necessary to submit the updated information required in these regulations, therefore, should be minimal for these entities.

Based on these facts, the IRS hereby certifies that the collection of information contained in the final regulations will not have a significant economic impact on a substantial number of small entities. Accordingly, a Regulatory Flexibility Analysis is not required.

Pursuant to section 7805(f) of the Code, the notice of proposed rulemaking preceding the final regulations was submitted to the Chief Counsel for Advocacy of the Small Business Administration for comment on its impact on small business and no comments were received.

Drafting Information

The principal author of these regulations is Elizabeth Cowan of the Office of the Associate Chief Counsel (Procedure and Administration).

List of Subjects

26 CFR Part 301

Employment taxes, Estate taxes, Excise taxes, Gift taxes, Income taxes, Penalties, Reporting and recordkeeping requirements.

26 CFR Part 602

Reporting and recordkeeping requirements.

Adoption of Amendments to the Regulations

Accordingly, 26 CFR part 301 is amended as follows:

PART 301—PROCEDURE AND ADMINISTRATION

■ **Paragraph 1.** The authority citation for part 301 continues to read as follows:

Authority: 26 U.S.C. 7805 * * *

■ **Par. 2.** Section 301.6109–1 is amended by adding paragraph (d)(2)(ii) to read as follows:

§ 301.6109–1 Identifying numbers.

* * * * *

(d) * * *

(2) * * *

(ii) *Updating of application information*—(A) *Requirements.* Persons issued employer identification numbers in accordance with the application process set forth in paragraph (d)(2)(i) of this section must provide to the Internal Revenue Service any updated application information in the manner and frequency required by forms, instructions, or other appropriate guidance.

(B) *Effective/applicability date.* Paragraph (d)(2)(ii)(A) of this section applies to all persons possessing an

employer identification number on or after January 1, 2014.

* * * * *

PART 602—OMB CONTROL NUMBERS UNDER THE PAPERWORK REDUCTION ACT

■ **Par. 3.** The authority citation for part 602 continues to read as follows:

Authority: 26 U.S.C. 7805.

■ **Par. 4.** In § 602.101, paragraph (b) is amended by adding the following entry in numerical order to the table:

§ 602.101 OMB Control Numbers.

* * * * *

(b) * * *

CFR part or section where identified and described	Current OMB Control No.
* * * * *	
301.6109–1	1545–2242
* * * * *	

Steven T. Miller

Deputy Commissioner for Services and Enforcement.

Approved: April 25, 2013.

Mark J. Mazur,

Assistant Secretary of the Treasury (Tax Policy).

[FR Doc. 2013–10515 Filed 5–3–13; 8:45 am]

BILLING CODE 4830–01–P

DEPARTMENT OF HOMELAND SECURITY

Coast Guard

33 CFR Part 100

[Docket Number USCG–2013–0297]

RIN 1625–AA08

Special Local Regulation, 50 Aniversario Balneario de Boqueron, Bahia de Boqueron; Boqueron, PR

AGENCY: Coast Guard, DHS.

ACTION: Temporary final rule.

SUMMARY: The Coast Guard is establishing a special local regulation on the waters of Bahia de Boqueron in Boqueron, PR during the 50 Aniversario Balneario de Boqueron, a high speed boat race. The event is scheduled to take place on Sunday, May 5, 2013. Approximately 40 high-speed power boats will be participating in the races. It is anticipated that 5 spectator crafts will be present during the races. The special local regulation is necessary for the safety of race participants, participant vessels, spectators, and the general public during the event. The special local regulation will establish the following three areas: a high speed boat race area, where all persons and vessels, except those persons and vessels participating in the high-speed boat races, are prohibited from entering, transiting through, anchoring in, or remaining within; a buffer zone around the race area, where all persons and vessels, except those persons and vessels enforcing the buffer zone or authorized participants transiting to their authorized the race area, are prohibited from entering, transiting through, anchoring in, or remaining within; and a spectator area, where all vessels are prohibited from anchoring and from traveling in excess of wake speed, unless authorized by the Captain of the Port San Juan or a designated representative.

DATES: This rule is effective on May 5, 2013.

ADDRESSES: Documents mentioned in this preamble are part of docket USCG–2013–0297. To view documents mentioned in this preamble as being available in the docket, go to *http://www.regulations.gov,* type the docket number in the ''SEARCH'' box and click ''SEARCH.'' Click on Open Docket Folder on the line associated with this rulemaking. You may also visit the Docket Management Facility in Room W12–140 on the ground floor of the Department of Transportation West Building, 1200 New Jersey Avenue SE., Washington, DC 20590, between 9 a.m. and 5 p.m., Monday through Friday, except Federal holidays.

FOR FURTHER INFORMATION CONTACT: If you have questions on this rule, call or email Lieutenant Lina Anderson, Sector San Juan Prevention Department, Coast Guard; telephone (787) 289–8679, email *Lina.R.Anderson@uscg.mil.* If you have questions on viewing or submitting material to the docket, call Barbara Hairston, Program Manager, Docket Operations, telephone (202) 366–9826.

SUPPLEMENTARY INFORMATION:

Table of Acronyms

DHS Department of Homeland Security
FR Federal Register
NPRM Notice of Proposed Rulemaking

A. Regulatory Information

The Coast Guard is issuing this temporary final rule without prior notice and opportunity to comment pursuant to authority under section 4(a) of the Administrative Procedure Act (APA) (5 U.S.C. 553(b)). This provision authorizes an agency to issue a rule without prior notice and opportunity to comment when the agency for good cause finds that those procedures are ''impracticable, unnecessary, or contrary to the public interest. Under 5 U.S.C. 553(b)(B), the Coast Guard finds that good cause exists for not publishing a notice of proposed rulemaking (NPRM) with respect to this rule because the Coast Guard did not receive necessary information about the event with sufficient time to publish an NPRM and to receive public comments prior to the event. Any delay in the effective date of this rule would be contrary to the public interest because immediate action is needed to minimize potential danger to the race participants, participant vessels, spectators and the general public.

Under 5 U.S.C. 553(d)(3), the Coast Guard finds that good cause exists for making this rule effective less than 30 days after publication in the **Federal Register** for the same reasons discussed above.

B. Basis and Purpose

The legal basis for the rule is the Coast Guard's authority to establish special local regulations: 33 U.S.C. 1233. The purpose of the rule is to ensure safety of life on navigable waters of the United States during the 50 Aniversario Balneario de Boqueron.

C. Discussion of the Final Rule

On May 5, 2013, Municipio de Cabo Rojo is sponsoring the 50 Aniversario Balneario de Boqueron, a series of high-speed boat races. The races will be held on the waters of Bahia de Boqueron in Boqueron, PR. Approximately 40 high-speed power boats will be participating in the races. It is anticipated that approximately 5 spectator vessels will be present during the races.

The special local regulation encompasses certain waters of Bahia de Boqueron in Boqueron, PR and will be enforced from 9 a.m. until 4 p.m. on May 5, 2013. The special local regulation consists of the following three areas: (1) A high-speed boat race area, where all persons and vessels, except those persons and vessels participating in the high-speed boat races, are prohibited from entering, transiting through, anchoring in, or remaining within; (2) a buffer zone around the race areas, where all persons and vessels, except those persons and vessels enforcing the buffer zone or authorized participants transiting to the race area, are prohibited from entering, transiting through, anchoring in, or remaining within; and (3) a spectator area, where all vessels are prohibited from anchoring or traveling in excess of wake speed unless authorized by the

Captain of the Port San Juan or a designated representative. Persons and vessels may request authorization to enter, transit through, anchor in, or remain within the race area, or buffer zone; or to anchor or travel in excess of wake speed in the spectator area by contacting the Captain of the Port San Juan by telephone at (787) 289–2041, or a designated representative via VHF radio on channel 16. If authorization to enter, transit through, anchor in, or remain within the race area, or buffer zone; or to anchor or travel in excess of wake speed in the spectator area, is granted by the Captain of the Port San Juan or a designated representative, all persons and vessels receiving such authorization must comply with the instructions of the Captain of the Port San Juan or a designated representative. The Coast Guard will provide notice of the special local regulations by Local Notice to Mariners, Broadcast Notice to Mariners, and on-scene designated representatives.

D. Regulatory Analyses

We developed this rule after considering numerous statutes and executive orders related to rulemaking. Below we summarize our analyses based on these statutes and executive orders.

1. Regulatory Planning and Review

This rule is not a significant regulatory action under section 3(f) of Executive Order 12866, Regulatory Planning and Review, as supplemented by Executive Order 13563, Improving Regulation and Regulatory Review, and does not require an assessment of potential costs and benefits under section 6(a)(3) of Executive Order 12866 or under section 1 of Executive Order 13563. The Office of Management and Budget has not reviewed it under those Orders.

The economic impact of this rule is not significant for the following reasons: (1) The special local regulation will be enforced for only seven hours; (2) although persons and vessels will not be able to enter, transit through, anchor in, or remain within the race area and buffer zone, or anchor in the spectator area, without authorization from the Captain of the Port San Juan or a designated representative, they may operate in the surrounding area during the enforcement period; (3) persons and vessels may still enter, transit through, anchor in, or remain within the race area and buffer zone, or anchor in the spectator area, during the enforcement period if authorized by the Captain of the Port San Juan or a designated representative; and (4) the Coast Guard will provide advance notification of the special local regulations to the local maritime community by Local Notice to Mariners and Broadcast Notice to Mariners.

2. Impact on Small Entities

The Regulatory Flexibility Act of 1980 (RFA), 5 U.S.C. 601–612, as amended, requires federal agencies to consider the potential impact of regulations on small entities during rulemaking. The term ''small entities'' comprises small businesses, not-for-profit organizations that are independently owned and operated and are not dominant in their fields, and governmental jurisdictions with populations of less than 50,000. The Coast Guard certifies under 5 U.S.C. 605(b) that this rule will not have a significant economic impact on a substantial number of small entities.

This rule may affect the following entities, some of which may be small entities: the owners or operators of vessels intending to enter, transit through, anchor in, or remain within that portion of Bahia de Boqueron encompassed within the special local regulation from 9 a.m. until 4 p.m. on May 5, 2013. For the reasons discussed in the Regulatory Planning and Review section above, this rule will not have a significant economic impact on a substantial number of small entities.

3. Assistance for Small Entities

Under section 213(a) of the Small Business Regulatory Enforcement Fairness Act of 1996 (Pub. L. 104–121), we want to assist small entities in understanding this rule. If the rule would affect your small business, organization, or governmental jurisdiction and you have questions concerning its provisions or options for compliance, please contact the person listed in the **FOR FURTHER INFORMATION CONTACT**, above.

Small businesses may send comments on the actions of Federal employees who enforce, or otherwise determine compliance with, Federal regulations to the Small Business and Agriculture Regulatory Enforcement Ombudsman and the Regional Small Business Regulatory Fairness Boards. The Ombudsman evaluates these actions annually and rates each agency's responsiveness to small business. If you wish to comment on actions by employees of the Coast Guard, call 1–888–REG–FAIR (1–888–734–3247). The Coast Guard will not retaliate against small entities that question or complain about this rule or any policy or action of the Coast Guard.

4. Collection of Information

This rule will not call for a new collection of information under the Paperwork Reduction Act of 1995 (44 U.S.C. 3501–3520).

5. Federalism

A rule has implications for federalism under Executive Order 13132, Federalism, if it has a substantial direct effect on the States, on the relationship between the national government and the States, or on the distribution of power and responsibilities among the various levels of government. We have analyzed this rule under that Order and determined that this rule does not have implications for federalism.

6. Protest Activities

The Coast Guard respects the First Amendment rights of protesters. Protesters are asked to contact the person listed in the **FOR FURTHER INTFORMATION CONTACT** section to coordinate protest activities so that your message can be received without jeopardizing the safety or security of people, places or vessels.

7. Unfunded Mandates Reform Act

The Unfunded Mandates Reform Act of 1995 (2 U.S.C. 1531–1538) requires Federal agencies to assess the effects of their discretionary regulatory actions. In particular, the Act addresses actions that may result in the expenditure by a State, local, or tribal government, in the aggregate, or by the private sector of $100,000,000 (adjusted for inflation) or more in any one year. Though this rule will not result in such an expenditure, we do discuss the effects of this rule elsewhere in this preamble.

8. Taking of Private Property

This rule will not cause a taking of private property or otherwise have taking implications under Executive Order 12630, Governmental Actions and Interference with Constitutionally Protected Property Rights.

9. Civil Justice Reform

This rule meets applicable standards in sections 3(a) and 3(b)(2) of Executive Order 12988, Civil Justice Reform, to minimize litigation, eliminate ambiguity, and reduce burden.

10. Protection of Children

We have analyzed this rule under Executive Order 13045, Protection of Children from Environmental Health Risks and Safety Risks. This rule is not an economically significant rule and does not create an environmental risk to health or risk to safety that may disproportionately affect children.

11. Indian Tribal Governments

This rule does not have tribal implications under Executive Order 13175, Consultation and Coordination with Indian Tribal Governments, because it does not have a substantial direct effect on one or more Indian tribes, on the relationship between the Federal Government and Indian tribes, or on the distribution of power and responsibilities between the Federal Government and Indian tribes.

12. Energy Effects

This action is not a ''significant energy action'' under Executive Order 13211, Actions Concerning Regulations That Significantly Affect Energy Supply, Distribution, or Use.

13. Technical Standards

This rule does not use technical standards. Therefore, we did not consider the use of voluntary consensus standards.

14. Environment

We have analyzed this rule under Department of Homeland Security Management Directive 023–01 and Commandant Instruction M16475.lD, which guide the Coast Guard in complying with the National Environmental Policy Act of 1969 (NEPA) (42 U.S.C. 4321–4370f), and have determined that this action is one of a category of actions that do not individually or cumulatively have a significant effect on the human environment. This rule involves a special local regulation issued in conjunction with a regatta or marine parade. This rule is categorically excluded under paragraph 34(h) and 35(b) of Figure 2–1 of the Commandant Instruction. An environmental analysis checklist supporting this determination and a Categorical Exclusion Determination are available in the docket where indicated under **ADDRESSES**. We seek any comments or information that may lead to the discovery of a significant environmental impact from this rule.

List of Subjects in 33 CFR Part 100

Harbors, Marine safety, Navigation (water), Reporting and recordkeeping requirements, Security measures, Waterways.

For the reasons discussed in the preamble, the Coast Guard amends 33 CFR part 100 as follows:

PART 100—SAFETY OF LIFE ON NAVIGABLE WATERS

■ 1. The authority citation for part 100 continues to read as follows:

Authority: 33 U.S.C. 1233.

■ 2. Add a temporary § 100.35T07–0297 to read as follows:

§ 100.35T07–0297 Special Local Regulation, 50 Aniversario Balneario de Boqueron, Bahia de Boqueron; Boqueron, PR.

(a) *Regulated Areas.* The following regulated areas are established as a special local regulation. All coordinates are North American Datum 1983.

(1) *Race Area.* All waters of the Bahia de Boqueron, Boqueron, Puerto Rico encompassed within an imaginary line connecting the following points: starting at Point 1 in position 18°01.030′ N, 67°10.466′ W; thence west to Point 2 in position 18°01.048′ N, 67°10.535′ W; thence southwest to Point 3 in position 18°00.770′ N, 67°10.683′ W; thence east to point 4 in position 18°00.750′ N, 67°10.611′ N; thence northwest back to origin. All persons and vessels, except those persons and vessels participating in the high-speed boat race, are prohibited from entering, transiting, anchoring, or remaining within the race area.

(2) *Buffer Zone.* All waters of the Bahia de Boqueron, Boqueron, Puerto Rico encompassed within an imaginary line connecting the following points: starting at Point 1 in position 18°01.099′ N, 67°10.540′ W; thence southwest to Point 2 in position 18°00.756′ N, 67°10.731′ W; thence east to Point 3 in position 18°00.716′ N, 67°10.581′ W; thence northeast to point 4 in position 18°01.069′ N, 67°10.401′ N; thence west back to origin. All persons and vessels except those persons and vessels enforcing the buffer zone are prohibited from entering, transiting through, anchoring in, or remaining within the buffer zone, with the exception of authorized race participants transiting to or from the race area.

(3) *Spectator Area.* All waters of the Bahia de Boqueron excluding the race area and the buffer zone, encompassed within an imaginary line connecting the following points: starting at Point 1 in position 18°00.977′ N, 67°10.392′ W; thence southwest to Point 2 in position 18°00.780′ N, 67°10.481′ W; thence east to Point 3 in position 18°00.780′ N, 67°10.464′ W; thence northeast to Point 3 in position 18°00.977′ N, 67°10.385′ W; thence west back to origin. All persons and vessels are prohibited from traveling in excess of wake speed and anchoring within the spectator area. On-scene designated representatives will direct spectator vessels to the spectator area.

(b) *Definition.* The term ''designated representative'' means Coast Guard Patrol Commanders, including Coast Guard coxswains, petty officers, and other officers operating Coast Guard vessels, and Federal, state, and local officers designated by or assisting the Captain of the Port San Juan in the enforcement of the regulated areas.

(c) *Regulations.*

(1) Except for those persons and vessels participating in the race, all persons and vessels are prohibited from entering, transiting through, anchoring in, or remaining within the race area. Except for those persons and vessels enforcing the buffer zone, or authorized participants transiting to or from the race area, all persons and vessels are prohibited from entering, transiting through, anchoring in, or remaining within the buffer area. All persons are prohibited from anchoring in, or traveling in excess of wake speed in the spectator area. Persons and vessels may request authorization to enter, transit through, anchor in, remain within the regulated areas, or to travel in excess of wake speed or anchor in the spectator area, by contacting the Captain of the Port San Juan by telephone at (787) 289–2041, or a designated representative via VHF radio on channel 16. If authorization is granted by the Captain of the Port San Juan or a designated representative, all persons and vessels receiving such authorization must comply with the instructions of the Captain of the Port San Juan or a designated representative.

(2) The Coast Guard will provide notice of the regulated areas by Local Notice to Mariners, Broadcast Notice to Mariners, and on-scene designated representatives.

(d) *Enforcement Date.* This rule will be enforced from 9 a.m. until 4 p.m. on May 5, 2013.

Dated: April 19, 2013.

D.W. Pearson,

Captain, U.S. Coast Guard, Captain of the Port San Juan.

[FR Doc. 2013–10682 Filed 5–3–13; 8:45 am]

BILLING CODE 9110–04–P

DEPARTMENT OF HOMELAND SECURITY

Coast Guard

33 CFR Part 117

[Docket No. USCG–2013–0283]

Drawbridge Operation Regulation; York River, between Yorktown and Gloucester Point, VA

AGENCY: Coast Guard, DHS.

ACTION: Notice of deviation from drawbridge regulation.

SUMMARY: The Coast Guard has issued a temporary deviation from the operating schedule that governs the draw of the US 17/George P. Coleman Memorial Swing Bridge across the York River, at mile 7.0, between Gloucester Point and Yorktown, VA. The deviation is necessary to facilitate electrical work on the George P. Coleman Memorial Swing Bridge. This deviation allows the drawbridge to remain in the closed to navigation position during the deviation period.

DATES: This deviation is effective from 7 a.m. on July 8, 2013 to 5 p.m. on July 12, 2013.

ADDRESSES: The docket for this deviation, [USCG–2013–0283] is available at *http://www.regulations.gov*. Type the docket number in the ''SEARCH'' box and click ''SEARCH.'' Click on Open Docket Folder on the line associated with this deviation. You may also visit the Docket Management Facility in Room W12–140 on the ground floor of the Department of Transportation West Building, 1200 New Jersey Avenue SE., Washington, DC 20590, between 9 a.m. and 5 p.m., Monday through Friday, except Federal holidays.

FOR FURTHER INFORMATION CONTACT: If you have questions on this temporary deviation, call or email Mr. Jim Rousseau, Bridge Administration Branch Fifth District, Coast Guard; telephone 757–398–6557, email *James.L.Rousseau2@uscg.mil*. If you have questions on viewing the docket, call Barbara Hairston, Program Manager, Docket Operations, 202–366–9826.

SUPPLEMENTARY INFORMATION: The Virginia Department of Transportation, who owns and operates this swing bridge, has requested a temporary deviation from the current operating regulations set out in 33 CFR 117.1025, to facilitate electrical work on the structure.

Under the regular operating schedule, the Coleman Memorial Bridge, at mile 7.0, between Gloucester Point and Yorktown, VA opens on signal except from 5 a.m. to 8 a.m. and 3 p.m. to 7 p.m. Monday through Friday, except Federal holidays the bridge shall remain closed to navigation. The Coleman Memorial Bridge has vertical clearances in the closed position of 60 feet above mean high water.

Under this temporary deviation, the drawbridge will be closed to navigation from 7 a.m. on Monday July 8, 2013 to 5 p.m. on Friday April 12, 2013. Emergency openings cannot be provided. There are no alternate routes for vessels transiting this section of the York River.

The York River is used by a variety of vessels including military, tugs, and recreational vessels. The Coast Guard has carefully coordinated the restrictions with military, commercial, and recreational waterway users. The Coast Guard will inform users of the waterway through our Local and Broadcast Notice to Mariners of the closure periods for the bridge so that vessels can arrange their transits to minimize any impacts caused by the temporary deviation. Mariners able to pass under the bridge in the closed position may do so at any time. Mariners are advised to proceed with caution.

In accordance with 33 CFR 117.35(e), the drawbridge must return to its regular operating schedule immediately at the end of the effective period of this temporary deviation. This deviation from the operating regulations is authorized under 33 CFR 117.35.

Dated: April 23, 2013.

Waverly W. Gregory, Jr.,

Bridge Program Manager, Fifth Coast Guard District.

[FR Doc. 2013–10608 Filed 5–3–13; 8:45 am]

BILLING CODE 9110–04–P

DEPARTMENT OF HOMELAND SECURITY

Coast Guard

33 CFR Part 117

[Docket No. USCG–2013–0292]

Drawbridge Operation Regulation; Lake Washington Ship Canal, Seattle, WA

AGENCY: Coast Guard, DHS.

ACTION: Notice of deviation from drawbridge regulation.

SUMMARY: The Coast Guard has issued a temporary deviation from the operating schedule that governs the Montlake Bridge across the Lake Washington Ship Canal, mile 5.2, at Seattle, WA, and the University Bridge across the Lake Washington Ship Canal, mile 4.3, at Seattle, WA. This deviation is necessary to accommodate the ''Beat the Bridge'' foot race. This deviation allows the bridges to remain in the closed position to allow safe movement of event participants.

DATES: This deviation is effective from 7:30 a.m. on May 19, 2013 to 9:30 a.m. on May 19, 2013.

ADDRESSES: The docket for this deviation, [USCG–2013–0292] is available at *http://www.regulations.gov*. Type the docket number in the ''SEARCH'' box and click ''SEARCH.'' Click on Open Docket Folder on the line associated with this deviation. You may also visit the Docket Management Facility in Room W12–140 on the ground floor of the Department of Transportation West Building, 1200 New Jersey Avenue SE., Washington, DC 20590, between 9 a.m. and 5 p.m., Monday through Friday, except Federal holidays.

FOR FURTHER INFORMATION CONTACT: If you have questions on this temporary deviation, call or email Randall Overton, Bridge Administrator, Coast Guard Thirteenth District; telephone 206–220–7282, email *Randall.D.Overton@uscg.mil*. If you have questions on viewing the docket, call Barbara Hairston, Program Manager, Docket Operations, telephone 202–366–9826.

SUPPLEMENTARY INFORMATION: The Washington State Department of Transportation and Seattle Department of Transportation have requested that the Montlake Bridge and the University Bridges remain closed to vessel traffic to facilitate safe passage of participants in the ''Beat the Bridge'' foot race. The race course passes over the University and Montlake Bridges. The University Bridge crosses the Lake Washington Ship Canal at mile 4.3 and while in the closed position provides 30 feet of vertical clearance throughout the navigation channel and 45 feet of vertical clearance through the center of the bridge; vertical clearance referenced to the Mean Water Level of Lake Washington. The Montlake Bridge crosses the Lake Washington Ship Canal at mile 5.2 and while in the closed position provides 30 feet of vertical clearance throughout the navigation channel and 46 feet of vertical clearance throughout the center 60-feet of the bridge; vertical clearance referenced to the Mean Water Level of Lake Washington. Vessels which do not require a bridge opening may continue to transit beneath the bridges during this closure period. Under normal conditions the Montlake Bridge operates in accordance with 33 CFR 117.1051(e) and the University Bridge operates in accordance with 33 CFR 117.1051(d) which require the bridges to open on signal, except that the bridges need not open for vessels less than 1,000 gross tons between 7 a.m. and 9 a.m. and 3:30 p.m. and 6:30 p.m. for the Montlake Bridge and 7 a.m. to 9 a.m. and 4 p.m. to 6 p.m. for the University Bridge Monday through Friday. This deviation period is from 7:30 a.m. on May 19, 2013 to 9:30 a.m. on May 19, 2013. The deviation allows the bascule spans of

the Montlake Bridge and University Bridge to remain in the closed position and need not open for maritime traffic from 7:30 a.m. on May 19, 2013 to 9:30 a.m. on May 19, 2013. The bridge shall operate in accordance to 33 CFR 117.1051 at all other times. Waterway usage on the Lake Washington Ship Canal ranges from commercial tug and barge to small pleasure craft. Mariners will be notified and kept informed of the bridge's operational status via the Coast Guard Notice to Mariners publication and Broadcast Notice to Mariners as appropriate. The draw span will be required to open, if needed, for vessels engaged in emergency response operations during this closure period.

In accordance with 33 CFR 117.35(e), the drawbridges must return to its regular operating schedule immediately at the end of the designated time period. This deviation from the operating regulations is authorized under 33 CFR 117.35.

Dated: April 22, 2013.

Randall D. Overton,

Bridge Administrator, Thirteenth Coast Guard District.

[FR Doc. 2013–10455 Filed 5–3–13; 8:45 am]

BILLING CODE 9110–04–P

DEPARTMENT OF VETERANS AFFAIRS

38 CFR Part 17

RIN 2900–AN98

Payment for Home Health Services and Hospice Care to Non-VA Providers

AGENCY: Department of Veterans Affairs.

ACTION: Final rule.

SUMMARY: The Department of Veterans Affairs (VA) amends its regulations concerning the billing methodology for non-VA providers of home health services and hospice care. Because the newly applicable methodology cannot supersede rates for which VA has specifically contracted, this rulemaking will only affect home health and hospice care providers who do not have existing negotiated contracts with VA. This rule also rescinds internal guidance documents that could be interpreted as conflicting with this final rule.

DATES: *Effective Date:* This final rule is effective November 15, 2013.

FOR FURTHER INFORMATION CONTACT: Lisa Brown, Chief, Policy Management Department, Health Administration Center, Veterans Health Administration, Department of Veterans Affairs, 3773 Cherry Creek Drive North, East Tower, Ste. 485, Denver, CO 80209, (303) 331–7829. (This is not a toll-free number.)

SUPPLEMENTARY INFORMATION: In a document published in the **Federal Register** on November 21, 2011 (76 FR 71920), VA proposed to amend its regulations concerning the billing methodology for non-VA providers of home health services and hospice care.

The proposed rulemaking indicated it would make the VA regulation governing payments for certain non-VA health care, 38 CFR 17.56, applicable to non-VA home health services and hospice care. Section 17.56 provides, among other things, that Medicare fee schedule or prospective payment system amounts will be paid to certain non-VA providers, unless VA negotiates other payment amounts with such providers. See 38 CFR 17.56(a)(2)(i). Interested persons were invited to submit comments to the proposed rule on or before December 21, 2011. We received one comment, which supported the proposed rule because it would standardize VA's payment methodology for non-VA home health and hospice care. The comment indicated, however, that the projected loss in revenue for home care and hospice providers due to the application of § 17.56 rates may affect the level of care provided to veterans.

We make no changes to the rule based on this comment. We are not aware of any evidence that supports an inference that, because of potentially lower payments, home care and hospice providers will offer a lower level of care to veterans than these providers have offered to veterans in the past. We are also not aware of evidence that suggests that home care and hospice providers offer a substandard level of care to any patient for which the provider receives the applicable Medicare rate, which is the rate that will now apply to veterans under this rule. Additionally, as stated in the proposed rule, we estimate that each home health care and hospice provider that does not separately negotiate a payment rate with VA may lose up to $1,346.28 annually, which is not a significant amount when compared to the average annual revenue for home health and hospice agencies of $4.7 million (as indicated by data from the Medicare Payment Advisory Commission as well as the Census Bureau). Lastly, to the extent any affected provider makes significantly less than $4.7 million of annual revenue on average, we also reiterate from the proposed rule that affected providers may benefit from any ''phase-in'' of the § 17.56 rates as contemplated by Medicare rates themselves, as set forth in § 17.56(a)(2)(i), which requires that VA pay ''[t]he applicable Medicare fee schedule or prospective payment system amount ('Medicare Rate') for the period in which the service was provided.'' 38 CFR 17.56(a)(2)(i).

Based on the rationale set forth in the proposed rule and in this document, VA is adopting the provisions of the proposed rule as a final rule with no changes.

Effect of Rulemaking

Title 38 of the Code of Federal Regulations, as revised by this rulemaking, represents VA's implementation of its legal authority on this subject. Other than future amendments to this regulation or governing statutes, no contrary guidance or procedures are authorized. All existing or subsequent VA guidance must be read to conform with this rulemaking if possible or, if not possible, such guidance is superseded by this rulemaking.

Paperwork Reduction Act

This final rule contains no collections of information under the Paperwork Reduction Act of 1995 (44 U.S.C. 3501–3521).

Regulatory Flexibility Act

The Secretary hereby certifies that this final rule will not have a significant economic impact on a substantial number of small entities as they are defined in the Regulatory Flexibility Act, 5 U.S.C. 601–612. About 8,400 providers without negotiated contracts offer home health care or hospice care to veterans at rates that are equivalent to, or not significantly higher than, those offered by this final rule. VA costs of purchased skilled home care were compared to Medicare Home Health Prospective Payment System (HH–PPS) reimbursement for a 60-day period. The average VA reimbursement level per veteran for a 60-day period was $2,537.40 in fiscal year (FY) 2010. The average Medicare reimbursement level for skilled home care per beneficiary was $2,312.94 in FY 2010. This difference amounts to providers receiving $3.74 less per day from VA for a 60-day episode of care. On average, each provider cares for six veterans at VA expense. The potential annual revenue loss will be approximately $1,346.28 per provider, an insignificant amount of revenue for these providers. Therefore, pursuant to 5 U.S.C. 605(b), this rulemaking is exempt from the initial and final regulatory flexibility analysis requirements of sections 603 and 604.

Executive Orders 12866 and 13563

Executive Orders 12866 and 13563 direct agencies to assess the costs and benefits of available regulatory alternatives and, when regulation is necessary, to select regulatory approaches that maximize net benefits (including potential economic, environmental, public health and safety effects, and other advantages; distributive impacts; and equity). Executive Order 13563 (Improving Regulation and Regulatory Review) emphasizes the importance of quantifying both costs and benefits, reducing costs, harmonizing rules, and promoting flexibility. Executive Order 12866 (Regulatory Planning and Review) defines a ''significant regulatory action,'' which requires review by the Office of Management and Budget (OMB), as ''any regulatory action that is likely to result in a rule that may: (1) Have an annual effect on the economy of $100 million or more or adversely affect in a material way the economy, a sector of the economy, productivity, competition, jobs, the environment, public health or safety, or State, local, or tribal governments or communities; (2) Create a serious inconsistency or otherwise interfere with an action taken or planned by another agency; (3) Materially alter the budgetary impact of entitlements, grants, user fees, or loan programs or the rights and obligations of recipients thereof; or (4) Raise novel legal or policy issues arising out of legal mandates, the President's priorities, or the principles set forth in this Executive Order.''

The economic, interagency, budgetary, legal, and policy implications of this regulatory action have been examined and it has been determined not to be a significant regulatory action under Executive Order 12866.

Unfunded Mandates

The Unfunded Mandates Reform Act of 1995 requires, at 2 U.S.C. 1532, that agencies prepare an assessment of anticipated costs and benefits before issuing any rule that may result in expenditure by State, local, and tribal governments, in the aggregate, or by the private sector, of $100 million or more (adjusted annually for inflation) in any one year. This final rule will have no such effect on State, local, and tribal governments, or the private sector.

Catalog of Federal Domestic Assistance

The Catalog of Federal Domestic Assistance numbers and titles for the programs affected by this document are 64.009, Veterans Medical Care Benefits and 64.010, Veterans Nursing Home Care.

Signing Authority

The Secretary of Veterans Affairs, or designee, approved this document and authorized the undersigned to sign and submit the document to the Office of the Federal Register for publication electronically as an official document of the Department of Veterans Affairs. Jose D. Riojas, Interim Chief of Staff, Department of Veterans Affairs, approved this document on April 30, 2013 for publication.

List of Subjects in 38 CFR Part 17

Administrative practice and procedure, Alcohol abuse, Alcoholism, Claims, Day care, Dental health, Drug abuse, Foreign relations, Government contracts, Grant programs-health, Government programs-veterans, Health care, Health facilities, Health professions, Health records, Homeless, Medical and dental schools, Medical devices, Medical research, Mental health programs, Nursing homes, Veterans.

Dated: May 1, 2013.

Robert C. McFetridge,

Director of Regulation Policy and Management, Office of General Counsel, Department of Veterans Affairs.

For the reasons stated in the preamble, the Department of Veterans Affairs amends 38 CFR part 17 as follows:

PART 17—MEDICAL

■ 1. The authority citation for part 17 continues to read as follows:

Authority: 38 U.S.C. 501, and as noted in specific sections.

§ 17.56 [Amended]

■ 2. Amend § 17.56(a) introductory text by removing ''and except for non-contractual payments for home health services and hospice care''.

[FR Doc. 2013–10694 Filed 5–3–13; 8:45 am]

BILLING CODE 8320–01–P

ENVIRONMENTAL PROTECTION AGENCY

40 CFR Part 52

[EPA–R06–OAR–2011–0494; FRL–9808–2]

Approval and Promulgation of Air Quality Implementation Plans; Texas; Revisions to Control of Air Pollution from Nitrogen Compounds from Stationary Sources

AGENCY: Environmental Protection Agency (EPA).

ACTION: Direct final rule.

SUMMARY: The EPA is taking direct final action to approve revisions to the Texas State Implementation Plan (SIP), 30 TAC, Chapter 117 Control of Air Pollution from Nitrogen Compounds. These revisions concern two separate actions. First, we are approving revisions to Texas SIP, Chapter 117 emissions specifications for lean burn engines fired on landfill or other biogas at minor sources of Nitrogen Oxides (NOx). Second, we are approving revisions to Texas SIP, Chapter 117 to include low temperature drying and curing ovens used in wet-laid non-woven fiber mat manufacturing operations when nitrogen containing resins or other additives are used. These two actions affect NOx sources operating in the Dallas Fort-Worth (DFW) 1997 8-hour ozone nonattainment area. The EPA is approving these two actions pursuant to section 110 of the Federal Clean Air Act (CAA, Act).

DATES: This direct final rule will be effective July 5, 2013 without further notice unless EPA receives adverse comments by June 5, 2013. If adverse comments are received, EPA will publish a timely withdrawal of the direct final rule in the **Federal Register** informing the public that the rule will not take effect.

ADDRESSES: Submit your comments, identified by Docket No EPA–R06–OAR–2011–0494, by one of the following methods:

- *Federal e-Rulemaking Portal: http://www.regulations.gov.*
- Follow the online instructions for submitting comments.
- *EPA Region 6 ''Contact Us'' Web site: http://epa.gov/region6/r6coment.htm.* Please click on ''6PD (Multimedia)'' and select ''Air'' before submitting comments.
- *Email:* Mr. Guy Donaldson at *donaldson.guy@epa.gov.* Please also send a copy by email to the person listed in the **FOR FURTHER INFORMATION CONTACT** section below.
- *Fax:* Mr. Guy Donaldson, Chief, Air Planning Section (6PD–L), at fax number 214–665–7263.
- *Mail:* Mr. Guy Donaldson, Chief, Air Planning Section (6PD–L), Environmental Protection Agency, 1445 Ross Avenue, Suite 1200, Dallas, Texas 75202–2733.
- *Hand or Courier Delivery:* Mr. Guy Donaldson, Chief, Air Planning Section (6PD–L), Environmental Protection Agency, 1445 Ross Avenue, Suite 1200, Dallas, Texas 75202–2733. Such deliveries are accepted only between the hours of 8 a.m. and 4 p.m. weekdays,

and not on legal holidays. Special arrangements should be made for deliveries of boxed information.

Instructions: Direct your comments to Docket No. EPA–R06–OAR–2011–0494. EPA's policy is that all comments received will be included in the public docket without change and may be made available online at *www.regulations.gov*, including any personal information provided, unless the comment includes information claimed to be Confidential Business Information (CBI) or other information whose disclosure is restricted by statute. Do not submit information that you consider to be CBI or otherwise protected through *www.regulations.gov* or email. The *www.regulations.gov* Web site is an ''anonymous access'' system, which means EPA will not know your identity or contact information unless you provide it in the body of your comment. If you send an email comment directly to EPA without going through *www.regulations.gov* your email address will be automatically captured and included as part of the comment that is placed in the public docket and made available on the Internet. If you submit an electronic comment, EPA recommends that you include your name and other contact information in the body of your comment and with any disk or CD–ROM you submit. If EPA cannot read your comment due to technical difficulties and cannot contact you for clarification, EPA may not be able to consider your comment. Electronic files should avoid the use of special characters, any form of encryption, and be free of any defects or viruses.

Docket: All documents in the docket are listed in the *www.regulations.gov* index. Although listed in the index, some information is not publicly available, *e.g.,* CBI or other information whose disclosure is restricted by statute. Certain other material, such as copyrighted material, will be publicly available only in hard copy. Publicly available docket materials are available either electronically in *www.regulations.gov* or in hard copy at the Air Planning Section (6PD–L), Environmental Protection Agency, 1445 Ross Avenue, Suite 700, Dallas, Texas 75202–2733. The file will be made available by appointment for public inspection in the Region 6 FOIA Review Room between the hours of 8:30 a.m. and 4:30 p.m. weekdays except for legal holidays. Contact the person listed in the **FOR FURTHER INFORMATION CONTACT** paragraph below to make an appointment. If possible, please make the appointment at least two working days in advance of your visit. There will be a 15 cent per page fee for making photocopies of documents. On the day of the visit, please check in at the EPA Region 6 reception area at 1445 Ross Avenue, Suite 700, Dallas, Texas.

The state submittal is also available for public inspection during official business hours, by appointment, at the Texas Commission on Environmental Quality (TCEQ), Office of Air Quality, 12124 Park 35 Circle, Austin, Texas 78753.

FOR FURTHER INFORMATION CONTACT: Mr. Alan Shar, Air Planning Section (6PD–L), Environmental Protection Agency, Region 6, 1445 Ross Avenue, Suite 700, Dallas, Texas 75202–2733, telephone 214–665–6691; fax number 214–665–7263; email address *shar.alan@epa.gov*.

SUPPLEMENTARY INFORMATION: Throughout this document ''we'', ''us'', or ''our'' refer to EPA.

Outline

I. Background
A. What actions are we taking?
B. What is EPA's evaluation of these revisions?
II. Final Action
III. Statutory and Executive Order Reviews

I. Background

A. What actions are we taking?

1. Lean Burn Engines

We previously approved the revisions to 30 TAC, Chapter 117 Control of Air Pollution from Nitrogen Compounds on December 3, 2008 at 73 FR 73562. We received a SIP submittal package, with a letter dated May 18, 2011, from TCEQ requesting approval of a revision to 30 TAC, Chapter 117, Subchapter D, Combustion Control at Minor Sources in Ozone Nonattainment Areas, Division 2, Dallas Fort-Worth Eight-Hour Ozone Nonattainment Area Minor Sources. This revision specifically concerns section 117.2110(a)(1)(B)(ii)(I). The adopted revisions expand the emission specification for lean-burn engines fired on landfill gas to include lean-burn engines fired on biogas at minor sources of nitrogen oxides (NOx) in the DFW 1997 eight-hour ozone nonattainment area. The adopted rule revision will require owners or operators of stationary gas-fired, lean-burn internal combustion engines fired on biogas fuels other than landfill gas that are installed, modified, reconstructed, or relocated on or after June 1, 2007, to comply with a NOx emission limit of 0.60 grams per horsepower-hour (g/hp-hr). The State's adopted rule was published on May 6, 2011 at 36 Texas Register 2855. By adopting the emission specification of 0.60 g/hp-hr in section 117.2110(a)(1)(B)(ii)(I) for the DFW area, the rule will become consistent with the emissions specification for this category of engines operating in the Houston-Galveston-Brazoria (HGB) 1997 8-hour ozone nonattainment area. The revision will provide for consistency and operational flexibility for this category of engines operating in the DFW 1997 eight-hour ozone nonattainment area. We are approving these SIP revisions pursuant to section 110 of the CAA. For more information see section 1 of the Technical Support Document (TSD) we have prepared in conjunction with this rulemaking action.

2. Low Temperature Drying and Curing Ovens

We previously approved the revisions to 30 TAC, Chapter 117 Control of Air Pollution from Nitrogen Compounds on December 3, 2008 at 73 FR 73562. We received a SIP submittal package, with a letter dated February 2, 2010, from TCEQ requesting approval of a revision to 30 TAC, Chapter 117, Subchapter B, Combustion Control at Major Industrial, Commercial, and Institutional Sources in Ozone Nonattainment Areas; Division 4, Dallas Fort-Worth Eight-Hour Ozone Nonattainment Area Major Sources. This revision specifically concerns section 117.403(a)(12). The state adopted a rule revision to Chapter 117 to expand the existing exemption from the current SIP-approved rule to include low-temperature drying ovens and curing ovens used in wet-laid, non-woven fiber mat manufacturing as well as low-temperature drying ovens used in mineral wool-type fiberglass manufacturing. The rule revision will amend the rule language from ''nitrogen-bound chemical additives'' to ''nitrogen-containing resins, or other additives.'' The State's adopted rule was published on January 29, 2010 at 35 Texas Register 649.

This revision to section 117.403(a)(12) will clarify that nitrogen-containing resins would qualify for an exemption because resins might not always be considered an additive. The revision will provide for operational flexibility and clarification to the rule language for this category of ovens operating in the DFW 1997 eight-hour ozone nonattainment area. We are approving these SIP revisions pursuant to section 110 of the CAA. See section 2 of the TSD we have prepared in conjunction with this rulemaking action for more information.

The EPA is publishing this rule without prior proposal because we view this as a noncontroversial amendment and anticipate no relevant adverse comments. However, in the proposed rules section of this **Federal Register**

publication, we are publishing a separate document that will serve as the proposal to approve the SIP revision if relevant adverse comments are received. This rule will be effective on July 5, 2013 without further notice unless we receive relevant adverse comments by June 5, 2013. If we receive relevant adverse comments, we will publish a timely withdrawal in the **Federal Register** informing the public that the rule will not take effect. We will then address all public comments in a subsequent final rule based on the proposed rule. However, we will not institute a second comment period on this action. Any parties interested in commenting must do so now. Please note that if we receive an adverse comment on an amendment, paragraph, or section of this rule and if that provision may be severed from the remainder of the rule, we may adopt as final those provisions of the rule that are not the subject of an adverse comment.

B. What is EPA's evaluation of these revisions?

1. Lean Burn Engines

The existing NOx emission specification in section 117.2110(a)(1)(B)(ii)(II) for gas-fired lean-burn engines using gaseous fuels other than landfill gas that are installed, modified, reconstructed, or relocated on or after June 1, 2007, is 0.50 g/hp-hr. Landfill gas and other biogas are produced from anaerobic digestion or decomposition of organic matter and have similar fuel and combustion characteristics. Both landfill gas and other biogas, at times, contain contaminants such as sulfur, chlorine, and silicon. Therefore, engines fired on landfill gas and other biogas can have technological feasibility issues with regard to the installation or employment of a NOx control catalyst due to the presence of such substances which can contribute to catalyst failure or deactivation in a matter of hours or days. The technological feasibility issues related to the installation and operation of a NOx control catalyst is the basis for the 0.60 g/hp-hr emission standard in the current SIP-approved rule and the justification for the proposed expansion of the existing emission specification to include lean-burn engines fired on biogas at minor sources of NOx in the DFW 1997 8-hour ozone nonattainment area. It is anticipated that the change in emission specification will potentially result in 0.02 tons per day (tpd) in NOx emissions from these engines firing biogas. As stated above, by adopting the emission specification of 0.60 g/hp-hr in section 117.2110(a)(1)(B)(ii)(I) for the DFW area, the rule will become consistent with the emissions specification for this category of engines operating in the HGB 1997 8-hour ozone nonattainment area. Furthermore, a larger amount of NOx would have resulted, if a likely alternative such as routing the gas to a flare is utilized. Given that a) the biogas will be used beneficially, b) there are technical challenges associated with the use of a post combustion control device for these engines, and c) only a small amount of emissions change (which is to be replaced with the surplus NOx reductions from the fleet turnover) will be at issue; this rule revision is acceptable. For this reason, we believe this rule revision is not in conflict with section 110(l) of the Act, and will not interfere with the attainment or maintenance of the NAAQS. We have evaluated the State's submittal and have determined that the rule revision meets the applicable requirements of the CAA and EPA air quality regulations. See our section 1 of the TSD. The originally approved Chapter 117 NOx emissions control requirements were part of the DFW 8-hour ozone NAAQS attainment demonstration plan; therefore, any NOx increase, including those resulting from adoption of this particular revision to section 117.2110(a)(1)(B)(ii)(II), should be accounted for and reflected in modeling of future DFW attainment demonstration plan submittals to EPA.

2. Low Temperature Drying and Curing Ovens

On December 3, 2008 at 73 FR 73562, we approved a revision to Chapter 117, Subchapter B, Division 4, Dallas-Fort Worth Eight-Hour Ozone Nonattainment Area Major Sources, with new emission control requirements for major Industrial, Commercial, or Institutional (ICI) sources of NO_X in the DFW 1997 8-hour ozone nonattainment area. That revision to Chapter 117, Subchapter B, Division 4 requires owners or operators of major ICI sources of NO_X in the DFW 1997 eight-hour ozone nonattainment area to reduce NO_X emissions from a wide variety of stationary sources including curing and drying ovens used in mineral wool-type fiberglass manufacturing operations. The December 3, 2008 rulemaking action approved into the Texas SIP included an addition of a new provision under section 117.403(a)(12) to exempt curing ovens used in mineral wool-type fiberglass manufacturing in which nitrogen-bound chemical additives are used due to technical feasibility issues associated with controlling NO_X emissions from curing ovens of this specific operation. TCEQ was petitioned by a fiberglass manufacturer stating that addition of nitrogen-bound chemical additives in its operation contributes to the creation of non-combustion-related thermal NO_X that cannot be controlled using the emissions control techniques the State has identified as appropriate for curing ovens utilized in mineral wool-type fiberglass manufacturing operations. The amount of NO_X emitted from curing ovens of this type is estimated to be a small contribution to the total NO_X emissions from this industry. As a result of granting the petition, approximately 0.1 tpd of NO_X emission reductions will need to be replaced in the 2007 DFW 1997 8-hour ozone attainment demonstration SIP. TCEQ is of the position that the 0.1 tpd of NO_X reduction can be substituted with 0.1 tpd of reductions in NO_X from the surplus fleet turnover. See section 2 of the TSD. We have reviewed State's submittal and agree with their reasoning to grant the petition, and thus revising section 117.403(a)(12). We also believe that by substituting the 0.1 tpd of NO_X from the surplus fleet turnover reductions the State has adequately demonstrated ''non-interference'' with the maintenance and attainment of NAAQS under section 110(l) of the Act. Therefore, the State's submittal meets the applicable requirements of the CAA and EPA air quality regulations.

II. Final Action

Today we are approving two separate actions. First, we are approving revisions to Texas SIP, Chapter 117 emissions specifications for lean burn engines fired on landfill or other biogas at minor sources of NO_X. Second, we are approving revisions to Texas SIP, Chapter 117 to include low temperature drying and curing ovens used in wet-laid non-woven fiber mat manufacturing and wet-laid, non-woven operations when nitrogen containing resins or other additives are used. Both of these actions affect NO_X sources operating in the DFW 1997 8-hour ozone nonattainment area. EPA is approving these two actions pursuant to section 110 of the Act.

III. Statutory and Executive Order Reviews

Under the Clean Air Act, the Administrator is required to approve a SIP submission that complies with the provisions of the Act and applicable Federal regulations. 42 U.S.C. 7410(k); 40 CFR 52.02(a). Thus, in reviewing SIP submissions, EPA's role is to approve state choices, provided that they meet the criteria of the Clean Air Act. Accordingly, this action merely

approves state law as meeting Federal requirements and does not impose additional requirements beyond those imposed by state law. For that reason, this action:

- Is not a ''significant regulatory action'' subject to review by the Office of Management and Budget under Executive Order 12866 (58 FR 51735, October 4, 1993);
- Does not impose an information collection burden under the provisions of the Paperwork Reduction Act (44 U.S.C. 3501 *et seq.*);
- Is certified as not having a significant economic impact on a substantial number of small entities under the Regulatory Flexibility Act (5 U.S.C. 601 *et seq.*);
- Does not contain any unfunded mandate or significantly or uniquely affect small governments, as described in the Unfunded Mandates Reform Act of 1995 (Pub. L. 104–4);
- Does not have Federalism implications as specified in Executive Order 13132 (64 FR 43255, August 10, 1999);
- Is not an economically significant regulatory action based on health or safety risks subject to Executive Order 13045 (62 FR 19885, April 23, 1997);
- Is not a significant regulatory action subject to Executive Order 13211 (66 FR 28355, May 22, 2001);
- Is not subject to requirements of Section 12(d) of the National Technology Transfer and Advancement Act of 1995 (15 U.S.C. 272 note) because application of those requirements would be inconsistent with the Clean Air Act;
- Does not provide EPA with the discretionary authority to address, as appropriate, disproportionate human health or environmental effects, using practicable and legally permissible methods, under Executive Order 12898 (59 FR 7629, February 16, 1994);
- Does not have tribal implications as specified by Executive Order 13175 (65 FR 67249, November 9, 2000), because the SIP is not approved to apply in Indian country located in the State, and EPA notes that it will not impose substantial direct costs on tribal governments or preempt tribal law; and
- Is not a ''major rule'' as defined by 5 U.S.C. 804(2) under the Congressional Review Act, 5 U.S.C. 801 *et seq.,* added by the Small Business Regulatory Enforcement Fairness Act of 1996. A major rule cannot take effect until 60 days after it is published in the **Federal Register**.

Under section 307(b)(1) of the Clean Air Act, petitions for judicial review of this action must be filed in the United States Court of Appeals for the appropriate circuit by July 5, 2013. Filing a petition for reconsideration by the Administrator of this final rule does not affect the finality of this action for the purposes of judicial review nor does it extend the time within which a petition for judicial review may be filed, and shall not postpone the effectiveness of such rule or action. This action may not be challenged later in proceedings to enforce its requirements (See section 307(b)(2) of the Act.)

List of Subjects in 40 CFR Part 52

Environmental protection, Air pollution control, Carbon monoxide, Incorporation by reference, Intergovernmental relations, Lead, Nitrogen dioxide, Ozone, Particulate matter, Reporting and recordkeeping requirements, Sulfur oxides, Volatile organic compounds.

Dated: April 19, 2013.

Ron Curry,

Regional Administrator, Region 6.

40 CFR part 52 is amended as follows:

PART 52—APPROVAL AND PROMULGATION OF IMPLEMENTATION PLANS

■ 1. The authority citation for part 52 continues to read as follows:

Authority: 42 U.S.C. 7401 *et seq.*

Subpart SS—Texas

■ 2. The table in § 52.2270(c) entitled ''EPA-Approved Regulations in the Texas SIP'' is ama06my0.006ended as follows:

■ a. By revising the entry for Section 117.403;

■ b. By revising the entry for Section 117.2110.

The revisions read as follows:

§ 52.2270 Identification of plan.

* * * * *

(c) * * *

EPA-APPROVED REGULATIONS IN THE TEXAS SIP

State citation	Title/subject	State approval/ submittal date	EPA approval date	Explanation
*	*	*	*	*
Chapter 117—Control of Air Pollution from Nitrogen Compounds				
*	*	*	*	*
Subchapter B—Combustion Control at Major Industrial, Commercial, and Institutional Sources in Ozone Nonattainment Areas				
*	*	*	*	*
Division 4—Dallas-Fort Worth Eight-Hour Ozone Nonattainment Area Major Sources				
*	*	*	*	*
Section 117.403	Exemptions	2/2/2010	5/6/2013 [Insert FR page number where document begins].	

EPA-APPROVED REGULATIONS IN THE TEXAS SIP—Continued

State citation	Title/subject	State approval/ submittal date	EPA approval date	Explanation
*	*	*	*	*
Subchapter D—Combustion Control at Minor Sources in Ozone Nonattainment Areas				
*	*	*	*	*
Division 2—Dallas-Fort Worth Eight-Hour Ozone Nonattainment Area Minor Sources				
*	*	*	*	*
Section 117.2110	Emission Specifications for Eight-Hour Attainment Demonstration.	5/18/2011	5/6/2013 [Insert FR page number where document begins].	
*	*	*	*	*

[FR Doc. 2013–10561 Filed 5–3–13; 8:45 am]
BILLING CODE 6560–50–P

ENVIRONMENTAL PROTECTION AGENCY

40 CFR Part 52

[EPA–R06–OAR–2012–0766; FRL–9808–4]

Approval and Promulgation of Air Quality Implementation Plans; Texas; Approval of Texas Low Emission Diesel Fuel Rule Revisions

AGENCY: Environmental Protection Agency (EPA).

ACTION: Direct final rule.

SUMMARY: EPA is granting direct final approval of a revision to the Texas State Implementation Plan (SIP) concerning the Texas Low Emission Diesel fuel rules. The revisions clarify existing definitions and provisions, revise the approval procedures for alternative diesel fuel formulations, add new registration requirements, and update the rule to reflect the current program status because the rule is now fully implemented. This SIP revision meets statutory requirements.

DATES: This rule is effective on July 5, 2013 without further notice, unless EPA receives relevant adverse comment by June 5, 2013. If EPA receives such comment, EPA will publish a timely withdrawal in the **Federal Register** informing the public that this rule will not take effect.

ADDRESSES: Submit your comments, identified by Docket No. EPA–R06–OAR–2012–0766, by one of the following methods:

- *Federal eRulemaking Portal: http://www.regulations.gov.* Follow the on-line instructions for submitting comments.
- *EPA Region 6 ''Contact Us'' Web site: http://epa.gov/region6/r6coment.htm.* Please click on ''6PD'' (Multimedia) and select ''Air'' before submitting comments.
- *Email:* Mr. Guy Donaldson at *donaldson.guy@epa.gov.* Please also send a copy by email to the person listed in the **FOR FURTHER INFORMATION CONTACT** section below.
- *Fax:* Mr. Guy Donaldson, Chief, Air Planning Section (6PD–L), at fax number 214–665–7263.
- *Mail:* Mr. Guy Donaldson, Chief, Air Planning Section (6PD–L), Environmental Protection Agency, 1445 Ross Avenue, Suite 1200, Dallas, Texas 75202–2733.
- *Hand or Courier Delivery:* Mr. Guy Donaldson, Chief, Air Planning Section (6PD–L), Environmental Protection Agency, 1445 Ross Avenue, Suite 1200, Dallas, Texas 75202–2733. Such deliveries are accepted only between the hours of 8:00 a.m. and 4:00 p.m. weekdays except for legal holidays. Special arrangements should be made for deliveries of boxed information.

Instructions: Direct your comments to Docket ID No. EPA–R06–OAR–2012–0766. EPA's policy is that all comments received will be included in the public docket without change and may be made available online at *www.regulations.gov,* including any personal information provided, unless the comment includes information claimed to be Confidential Business Information (CBI) or other information whose disclosure is restricted by statute. Do not submit information that you consider to be CBI or otherwise protected through *www.regulations.gov* or email. The *www.regulations.gov* Web site is an ''anonymous access'' system, which means EPA will not know your identity or contact information unless you provide it in the body of your comment. If you send an email comment directly to EPA without going through *www.regulations.gov* your email address will be automatically captured and included as part of the comment that is placed in the public docket and made available on the Internet. If you submit an electronic comment, EPA recommends that you include your name and other contact information in the body of your comment and with any disk or CD–ROM you submit. If EPA cannot read your comment due to technical difficulties and cannot contact you for clarification, EPA may not be able to consider your comment. Electronic files should avoid the use of special characters, any form of encryption, and be free of any defects or viruses.

Docket: All documents in the docket are listed in the *www.regulations.gov index.* Although listed in the index, some information is not publicly available, e.g., CBI or other information whose disclosure is restricted by statute. Certain other material, such as copyrighted material, will be publicly available only in hard copy. Publicly available docket materials are available either electronically in *www.regulations.gov* or in hard copy at the Air Planning Section (6PD–L), Environmental Protection Agency, 1445 Ross Avenue, Suite 700, Dallas, Texas 75202–2733. The file will be made available by appointment for public inspection in the Region 6 FOIA Review Room between the hours of 8:30 a.m.

and 4:30 p.m. weekdays except for legal holidays. Contact the person listed in the **FOR FURTHER INFORMATION CONTACT** paragraph below or Mr. Bill Deese at 214–665–7253 to make an appointment. If possible, please make the appointment at least two working days in advance of your visit. There will be a 15 cent per page fee for making photocopies of documents. On the day of the visit, please check in at the EPA Region 6 reception area at 1445 Ross Avenue, Suite 700, Dallas, Texas.

The State submittal is also available for public inspection at the State Air Agency listed below during official business hours by appointment:

Texas Commission on Environmental Quality, 12100 Park 35 Circle, Building E, Austin, Texas 78753, and at the commission's Web site at *http://www/tceq.texas.gov/nav/rules/propose_adopt.html.*

FOR FURTHER INFORMATION CONTACT: Ms. Sandra Rennie, Air Planning Section (6PD–L), Environmental Protection Agency, Region 6, 1445 Ross Avenue, Suite 700, Dallas, Texas 75202–2733, telephone (214) 665–7367; fax number 214–665–7263; email address *rennie.sandra@epa.gov.*

SUPPLEMENTARY INFORMATION: Throughout this document, whenever ''we'' ''us'' or ''our'' is used, we mean the EPA.

Outline

I. Background
II. Analysis of the State's Submittal
III. Final Action
IV. Statutory and Executive Order Reviews

I. Background

The Texas Low Emission Diesel (TxLED) fuel program was initially approved by EPA on November 14, 2001 (66 FR 57196). It was revised on April 6, 2005 (70 FR 17321), October 6, 2005 (70 FR 58325), and October 24, 2008 (73 FR 63378). The TxLED fuel is similar to CARB (California Air Resources Board) diesel and is required for use by on-highway vehicles and non-road equipment (including marine vessels) in 110 counties in eastern and central Texas. Use of this boutique diesel fuel reduces NO_X emissions.

Texas submitted a revision to the TxLED rules on September 19, 2012. The rulemaking revises definitions; establishes new designated alternative limits for TxLED fuel properties; removes expired registration requirements and establishes new registration requirements for identifying production and import facilities; revises approval procedures for alternative diesel fuel formulations; specifies that the approvals of all additive-based alternative diesel fuel formulations will be subject to revocation if the composition of the additive is found to be altered; allows all alternative diesel formulations approved by the TCEQ prior to April 1, 2012, to remain in effect; revises reporting requirements to include production and import facility data; requires alternative emission reduction plans using the Unified Model to determine compliance each calendar quarter; removes expired early gasoline sulfur reduction credits provisions; and makes other clarifying changes as needed for accuracy and consistency.

II. Analysis of the State's Submittal

We compared the rule revisions for stringency against the rule language in the approved SIP. Revisions are made to the following sections: § 114.6, Definitions; § 114.312, Low Emission Diesel Standards; § 114.313, Designated Alternative Limits; § 114.314, Registration of Diesel Producers and Importers; § 114.315, Approved Test Methods; § 114.316, Monitoring, Recordkeeping, and Reporting Requirements; § 114.317 Exemptions to Low Emission Diesel Requirements; § 114.318, Alternative Emission Reduction Plan; § 114.319, Affected Counties and Compliance Dates.

We found that the revisions to the rule did not compromise the integrity of the approved SIP. In some cases, the revisions made the rule more stringent than the approved SIP. See the Technical Support Document that accompanies this action for a detailed analysis of the revisions.

III. Final Action

Pursuant to section 110 of the Act, EPA is approving revisions to the TxLED rule that were submitted on September 19, 2012. We evaluated the State's submittal and determined that it meets the applicable requirements of the Clean Air Act (CAA) section 110. Approval of this submittal will not result in any increase in ozone concentration levels. In accordance with CAA section 110(l), these revisions will not interfere with attainment of the National Ambient Air Quality Standards (NAAQS), Rate of Progress, reasonable further progress, or any other applicable requirement of the CAA.

EPA is publishing this rule without prior proposal because we view this as a non-controversial amendment and anticipate no adverse comments. However, in the proposed rules section of this **Federal Register** publication, we are publishing a separate document that will serve as the proposal to approve the SIP revision if relevant adverse comments are received. This rule will be effective on July 5, 2013 without further notice unless we receive adverse comment by June 5, 2013. If we receive adverse comments, we will publish a timely withdrawal in the **Federal Register** informing the public that the rule will not take effect. We will address all public comments in a subsequent final rule based on the proposed rule. We will not institute a second comment period on this action. Any parties interested in commenting must do so now. Please note that if we receive adverse comment on an amendment, paragraph, or section of this rule and if that provision may be severed from the remainder of the rule, we may adopt as final those provisions of the rule that are not the subject of an adverse comment.

IV. Statutory and Executive Order Reviews

Under the Clean Air Act, the Administrator is required to approve a SIP submission that complies with the provisions of the Act and applicable Federal regulations. 42 U.S.C. 7410(k); 40 CFR 52.02(a). Thus, in reviewing SIP submissions, EPA's role is to approve state choices, provided that they meet the criteria of the Clean Air Act. Accordingly, this action merely approves state law as meeting Federal requirements and does not impose additional requirements beyond those imposed by state law. For that reason, this action:

- is not a ''significant regulatory action'' subject to review by the Office of Management and Budget under Executive Order 12866 (58 FR 51735, October 4, 1993);
- does not impose an information collection burden under the provisions of the Paperwork Reduction Act (44 U.S.C. 3501 *et seq.*);
- is certified as not having a significant economic impact on a substantial number of small entities under the Regulatory Flexibility Act (5 U.S.C. 601 *et seq.*);
- does not contain any unfunded mandate or significantly or uniquely affect small governments, as described in the Unfunded Mandates Reform Act of 1995 (Pub. L. 104–4);
- does not have Federalism implications as specified in Executive Order 13132 (64 FR 43255, August 10, 1999);
- is not an economically significant regulatory action based on health or safety risks subject to Executive Order 13045 (62 FR 19885, April 23, 1997);
- is not a significant regulatory action subject to Executive Order 13211 (66 FR 28355, May 22, 2001);

• is not subject to requirements of Section 12(d) of the National Technology Transfer and Advancement Act of 1995 (15 U.S.C. 272 note) because application of those requirements would be inconsistent with the Clean Air Act; and

• does not provide EPA with the discretionary authority to address, as appropriate, disproportionate human health or environmental effects, using practicable and legally permissible methods, under Executive Order 12898 (59 FR 7629, February 16, 1994).

In addition, this rule does not have tribal implications as specified by Executive Order 13175 (65 FR 67249, November 9, 2000), because the SIP is not approved to apply in Indian country located in the state, and EPA notes that it will not impose substantial direct costs on tribal governments or preempt tribal law.

The Congressional Review Act, 5 U.S.C. section 801 *et seq.,* as added by the Small Business Regulatory Enforcement Fairness Act of 1996, generally provides that before a rule may take effect, the agency promulgating the rule must submit a rule report, which includes a copy of the rule, to each House of the Congress and to the Comptroller General of the United States. EPA will submit a report containing this action and other required information to the U.S. Senate, the U.S. House of Representatives, and the Comptroller General of the United States prior to publication of the rule in the **Federal Register**. A major rule cannot take effect until 60 days after it is published in the **Federal Register**. This action is not a ''major rule'' as defined by 5 U.S.C. 804(2).

Under section 307(b)(1) of the Clean Air Act, petitions for judicial review of this action must be filed in the United States Court of Appeals for the appropriate circuit by July 5, 2013. Filing a petition for reconsideration by the Administrator of this final rule does not affect the finality of this action for the purposes of judicial review nor does it extend the time within which a petition for judicial review may be filed, and shall not postpone the effectiveness of such rule or action. This action may not be challenged later in proceedings to enforce its requirements. (See section 307(b)(2).)

List of Subjects in 40 CFR Part 52

Environmental protection, Air pollution control, Carbon monoxide, Incorporation by reference, Intergovernmental relations, Lead, Nitrogen dioxide, Ozone, Particulate matter, Reporting and recordkeeping requirements, Sulfur oxides, Volatile organic compounds.

Dated: April 5, 2013.

Ron Curry,

Regional Administrator, Region 6.

40 CFR part 52 is amended as follows:

PART 52—APPROVAL AND PROMULGATION OF IMPLEMENTATION PLANS

■ 1. The authority citation for part 52 continues to read as follows:

Authority: 42 U.S.C. 7401 *et seq.*

Subpart SS—Texas

■ 2. The table in § 52.2270(c) entitled ''EPA Approved Regulations in the Texas SIP'' is amended under ''Chapter 114 (Reg 4)—Control of Air Pollution from Motor Vehicles'' by revising the entries for Section 114.6 and for Sections 114.312 through 114.319 to read as follows:

§ 52.2270 Identification of plan.

* * * * *

(c) * * *

EPA-APPROVED REGULATIONS IN THE TEXAS SIP

State citation	Title/subject	State approval/ submittal date	EPA approval date	Explanation
*	*	*	*	*
Chapter 114 (Reg 4)—Control of Air Pollution from Motor Vehicles Subchapter A—Definitions				
*	*	*	*	*
Section 114.6	Low Emission Fuel Definitions	8/22/12	5/6/13, [Insert *FR* page number where document begins].	
*	*	*	*	*
Subchapter H—Low Emission Fuels				
*	*	*	*	*
Division 2: Low Emission Diesel				
Section 114.312	Low Emission Diesel Standards	8/22/12	5/6/13 [Insert *FR* page number where document begins].	
Section 114.313	Designated Alternative Limits	8/22/12	5/6/13 [Insert *FR* page number where document begins].	
Section 114.314	Registration of Diesel Producers and Importers.	8/22/12	5/6/13 [Insert *FR* page number where document begins].	

EPA-APPROVED REGULATIONS IN THE TEXAS SIP—Continued

State citation	Title/subject	State approval/ submittal date	EPA approval date	Explanation
Section 114.315	Approved Test Methods	8/22/12	5/6/13 [Insert *FR* page number where document begins].	
Section 114.316	Monitoring, Recordkeeping, and Reporting Requirements.	8/22/12	5/6/13 [Insert *FR* page number where document begins].	
Section 114.317	Exemptions to Low Emission Diesel Requirements.	8/22/12	5/6/13 [Insert *FR* page number where document begins].	
Section 114.318	Alternative Emission Reduction Plan.	8/22/12	5/6/13 [Insert *FR* page number where document begins].	
Section 114.319	Affected Counties and Compliance Dates.	8/22/12	5/6/13 [Insert *FR* page number where document begins].	
*	*	*	*	*	*	*

* * * * *

[FR Doc. 2013–10546 Filed 5–3–13; 8:45 am]

BILLING CODE 6560–50–P

ENVIRONMENTAL PROTECTION AGENCY

40 CFR Part 52

[EPA–R05–OAR–2012–0650; FRL–9809–1]

Approval and Promulgation of Air Quality Implementation Plans; Indiana; Consent Decree Requirements

AGENCY: Environmental Protection Agency (EPA).

ACTION: Withdrawal of direct final rule.

SUMMARY: Due to the receipt of an adverse comment, EPA is withdrawing the March 15, 2013, direct final rule approving a revision to the Indiana State Implementation Plan (SIP). EPA will address the comment in a subsequent final action based upon the proposed rulemaking action, also published on March 15, 2013. EPA will not institute a second comment period on this action.

DATES: The direct final rule published at 78 FR 16412 on March 15, 2013, is withdrawn as of May 6, 2013.

FOR FURTHER INFORMATION CONTACT: Sam Portanova, Environmental Engineer, Air Permits Section, Air Programs Branch (AR–18J), Environmental Protection Agency, Region 5, 77 West Jackson Boulevard, Chicago, Illinois 60604, (312) 886–3189, *portanova.sam@epa.gov.*

SUPPLEMENTARY INFORMATION: EPA is withdrawing the March 15, 2013 (78 FR 16412), direct final rule approving a revision to Indiana's construction permit rule for sources subject to the state operating permit program regulations at 40 CFR Part 70. In the direct final rule, EPA stated that if adverse comments were received by April 15, 2013, the rule would be withdrawn and not take effect. On March 18, 2013, EPA received a comment, which it interprets as adverse and, therefore, EPA is withdrawing the direct final rule. EPA will address the comment in a subsequent final action based upon the proposed rulemaking action, also published on March 15, 2013 (78 FR 16449). EPA will not institute a second comment period on this action.

List of Subjects in 40 CFR Part 52

Environmental protection, Air pollution control, Incorporation by reference, Intergovernmental relations, Sulfur oxides.

Authority: 42 U.S.C. 7401 *et seq.*

Dated: April 22, 2013.

Susan Hedman,

Regional Administrator, Region 5.

PART 52—APPROVAL AND PROMULGATION OF IMPLEMENTATION PLANS

■ Accordingly, the amendment to 40 CFR 52.770 published in the **Federal Register** on March 15, 2013 (78 FR 16412) on page 16414 is withdrawn as of May 6, 2013.

[FR Doc. 2013–10690 Filed 5–3–13; 8:45 am]

BILLING CODE 6560–50–P

ENVIRONMENTAL PROTECTION AGENCY

40 CFR Part 52

[EPA–R05–OAR–2010–0394; EPA–R05–OAR–2012–0786; FRL–9786–2]

Approval and Promulgation of Air Quality Implementation Plans; Illinois; Consumer Products and AIM Rules

AGENCY: Environmental Protection Agency (EPA).

ACTION: Direct final rule.

SUMMARY: EPA is approving a revision to the Illinois State Implementation Plan (SIP). This approval resolves the issues raised in the June 7, 2012, conditional approval of Illinois' rules. EPA is also approving volatile organic compound (VOC) content limits and associated provisions for additional consumer products categories into the state's SIP. Finally, EPA is approving language to clarify VOC limit applicability for architectural and industrial maintenance (AIM) coatings into the Illinois SIP.

DATES: This direct final rule will be effective July 5, 2013, unless EPA receives adverse comments by June 5, 2013. If adverse comments are received, EPA will publish a timely withdrawal of the direct final rule in the **Federal Register** informing the public that the rule will not take effect.

ADDRESSES: Submit your comments, identified by Docket ID Nos. EPA–R05–OAR–2010–0394, EPA–R05–OAR–2012–0786, by one of the following methods:

1. *www.regulations.gov*: Follow the on-line instructions for submitting comments.

2. *Email: blakley.pamela@epa.gov.*

3. *Fax:* (312) 692–2450.

4. *Mail:* Pamela Blakley, Chief, Control Strategies Section, Air Programs Branch (AR–18J), U.S. Environmental Protection Agency, 77 West Jackson Boulevard, Chicago, Illinois 60604.

5. *Hand Delivery:* Pamela Blakley, Chief, Control Strategies Section, Air Programs Branch (AR–18J), U.S. Environmental Protection Agency, 77 West Jackson Boulevard, Chicago, Illinois 60604. Such deliveries are only accepted during the Regional Office normal hours of operation, and special arrangements should be made for deliveries of boxed information. The Regional Office official hours of business are Monday through Friday, 8:30 a.m. to 4:30 p.m., excluding Federal holidays.

Instructions: Direct your comments to Docket ID No. EPA–R05–OAR–2010–0394. EPA's policy is that all comments received will be included in the public docket without change and may be made available online at *www.regulations.gov,* including any personal information provided, unless the comment includes information claimed to be Confidential Business Information (CBI) or other information whose disclosure is restricted by statute. Do not submit information that you consider to be CBI or otherwise protected through *www.regulations.gov* or email. The *www.regulations.gov* Web site is an ''anonymous access'' system, which means EPA will not know your identity or contact information unless you provide it in the body of your comment. If you send an email comment directly to EPA without going through *www.regulations.gov* your email address will be automatically captured and included as part of the comment that is placed in the public docket and made available on the Internet. If you submit an electronic comment, EPA recommends that you include your name and other contact information in the body of your comment and with any disk or CD–ROM you submit. If EPA cannot read your comment due to technical difficulties and cannot contact you for clarification, EPA may not be able to consider your comment. Electronic files should avoid the use of special characters, any form of encryption, and be free of any defects or viruses.

Docket: All documents in the docket are listed in the *www.regulations.gov* index. Although listed in the index, some information is not publicly available, e.g., CBI or other information whose disclosure is restricted by statute. Certain other material, such as copyrighted material, will be publicly available only in hard copy. Publicly available docket materials are available either electronically in *www.regulations.gov* or in hard copy at the Environmental Protection Agency, Region 5, Air and Radiation Division, 77 West Jackson Boulevard, Chicago, Illinois 60604. This facility is open from 8:30 a.m. to 4:30 p.m., Monday through Friday, excluding Federal holidays. We recommend that you telephone Anthony Maietta, Environmental Protection Specialist, at (312) 353–8777 before visiting the Region 5 office.

FOR FURTHER INFORMATION CONTACT: Anthony Maietta, Environmental Protection Specialist, Control Strategies Section, Air Programs Branch (AR–18J), Environmental Protection Agency, Region 5, 77 West Jackson Boulevard, Chicago, Illinois 60604, (312) 353–8777, *maietta.anthony@epa.gov.*

SUPPLEMENTARY INFORMATION: Throughout this document whenever ''we,'' ''us,'' or ''our'' is used, we mean EPA. This supplementary information section is arranged as follows:

I. Background
II. Contents of Illinois' Submittal
III. What action is EPA taking?
IV. Statutory and Executive Order Reviews

I. Background

Consumer products encompass a wide array of sprays, gels, cleaners, adhesives, and other chemically formulated products that are purchased for personal or institutional use and that emit VOCs through their use, consumption, storage, disposal, destruction, or decomposition. AIM coatings are generally paints, varnishes, and other similar materials that are meant for use on external surfaces of buildings, pavements and other outside structures. On April 7, 2010, the Illinois Environmental Protection Agency (IEPA) submitted a request for EPA to approve Part 223 of Title 35 of the Illinois Administrative Code (35 IAC Part 223), titled, ''Standards and limitations for Organic Material Emissions for Area Sources'', into the Illinois SIP. On June 7, 2012, EPA published a final action approving Illinois' consumer products and AIM rules into the State's SIP (77 FR 33659). In our June 7, 2012, rulemaking, we conditionally approved portions of IEPA's submittal, based upon the State's September 2, 2011, letter to EPA committing to correct the noted deficiencies by July 9, 2013. On September 14, 2012, IEPA submitted a revision to 35 IAC Part 223 correcting the paragraphs that EPA conditionally approved in our June 7, 2012, action.

Illinois' September 14, 2012, submittal requested that EPA approve VOC limits for additional categories of consumer products, as well as a compliance deadline and impurities provisions for these product categories. Illinois' submittal also requested EPA to approve a revision to 35 IAC Part 223 to clarify applicability of the AIM VOC limits.

II. Contents of Illinois' Submittal

As noted above, on June 7, 2012, EPA conditionally approved four paragraphs of 35 IAC Part 223, noting deficiencies in the state rules. The four specific provisions containing these deficiencies were 35 IAC 223.205(6)(A), 35 IAC 223.205(6)(B), 35 IAC 223.205(17)(A), and 35 IAC 223.205(17)(B). These paragraphs displayed incorrectly labeled high-volatility and medium-volatility organic material limits. Based on our review of the September 14, 2012, submittal, IEPA has corrected the deficiencies within the prescribed time frame. We are converting the conditional approval to full approval.

IEPA also requested that EPA approve, into the Illinois SIP, adjustments to 35 IAC Part 223, as discussed below.

35 IAC Part 223, ''STANDARDS AND LIMITATIONS FOR ORGANIC MATERIAL EMISSIONS FOR AREA SOURCES''

Subpart B: Consumer and Consumer Products

IEPA added section 223.211 ''Requirements for Adhesive Removers, Aerosol Adhesives, Contact Adhesives, Electrical Cleaners, Electronic Cleaners, Footwear or leather Care Products, General Purpose Degreasers, and Graffiti Removers'' to the table of contents of Subpart B. The addition is approvable into the Illinois SIP.

35 IAC Part 223.201, ''Applicability''

IEPA added the phrase ''unless another date is specified'' to the applicability of 35 IAC Part 223 because the new product categories added to this rule were added after the rule's original applicability date. The new applicability date for the additional product categories (July 1, 2012) is specified in section 223.305 of the rule. This addition is approvable into the Illinois SIP.

35 IAC Part 223.203, ''Definitions for Subpart B''

IEPA amended the definition of ''Existing Product'' to remove the specific applicability date of July 1, 2009, and added the phrase ''the effective date in Section 223.205'' in its place. This is an approvable amendment because both the July 1, 2009 (for

product categories that were affected by the rule as approved by EPA at 77 FR 33659), and July 1, 2012 (for product categories affected by IEPA's latest amendments to the rule), effective dates are clearly stated in section 223.205 of Illinois' rule.

IEPA added the definition of ''Vinyl/Fabric/Leather/Polycarbonate Coating'' to this section. The definition is consistent with the Ozone Transport Commission (OTC) model rule, and therefore, is approvable into the Illinois SIP.

Section 223.205, ''Standards''

IEPA requested EPA to approve the addition of new product categories, VOC limits for the products in these categories, and their associated applicability date at 35 IAC Part 223.205. IEPA amended the numeric order of the standards list in order to incorporate the new product categories. Specifically, the new product categories added to 35 IAC Part 223.205 (with subcategories listed in parenthesis) are:

—Adhesive Removers (floor or wall covering, gasket or thread locking, general purpose, and specialty),

—Anti-static Product, Non-Aerosol

—Contact Adhesives (general purpose and special purpose),

—Electrical Cleaner,

—Electronic Cleaner,

—Fabric Refresher (aerosol and non-aerosol),

—Footwear or Leather Care Products (aerosol, solid, and other forms),

—Graffiti Remover (aerosol and non-aerosol),

—Hair Styling Products (aerosol and pump sprays, and all other forms),

—Shaving Gel, and

—Wood Cleaner (aerosol and non-aerosol).

The VOC limits for these additional consumer products categories are at least as stringent as the VOC limits contained in EPA's national consumer products rule (''National Volatile Organic Compound Emission Limits for Consumer Products,'' 40 CFR 59, subpart C), and mirror the VOC limits contained in the model consumer products rule created by the OTC. Therefore, these additions are approvable into the Illinois SIP. It should be noted that while Illinois is not an OTC member state, they have voluntarily chosen to adopt these VOC limits to create more consistency in regional and national markets for consumer products.

Section 223.211, ''Requirements for Adhesive Removers, Aerosol Adhesives, Contact Adhesives, Electrical Cleaners, Electronic Cleaners, Footwear or Leather Care Products, General Purpose Degreasers, and Graffiti Removers''.

This new section in Illinois' rule prohibits the sale of the aforementioned products after July 1, 2012, if they contain methylene chloride, perchloroethylene, or trichloroethylene. This section also allows for the sale of the aforementioned products that may contain methylene chloride, perchloroethylene, or trichloroethylene, but only if the compounds are present as impurities in a combined amount equal to or less than 0.01 percent by weight. This section mirrors the OTC model rule, and is therefore approvable into the Illinois SIP.

Subpart C: Architectural and Industrial Maintenance Coatings

Section 223.305, ''Applicability''

IEPA amended paragraph (c) of this section to clarify that the volume of architectural coating in a container shall be considered the total volume of coating that is packaged as a unit for retail sale or for use by the consumer. This revision helps ensure that sellers of AIM coatings in Illinois comply with the VOC content limits contained in 35 IAC Part 223. Because this amendment makes clear that a seller cannot simply sell multiple small containers of an AIM coating (where each container contains a volume less than the amount that would trigger compliance with an AIM VOC limit), it strengthens compliance with the rule, and is approvable into the Illinois SIP.

III. What action is EPA taking?

EPA is approving a revision to the Illinois SIP, converting the June 7, 2012, conditional approved to full approval. EPA is also approving the requested amendments and additions to the Illinois SIP at 35 IAC Part 223 contained in Illinois' September 14, 2012, submittal. We are publishing this action without prior proposal because we view this as a noncontroversial amendment and anticipate no adverse comments. However, in the proposed rules section of this **Federal Register** publication, we are publishing a separate document that will serve as the proposal to approve the state plan if relevant adverse written comments are filed. This rule will be effective July 5, 2013 without further notice unless we receive relevant adverse written comments by June 5, 2013. If we receive such comments, we will withdraw this action before the effective date by publishing a subsequent document that will withdraw the final action. All public comments received will then be addressed in a subsequent final rule based on the proposed action. EPA will not institute a second comment period. Any parties interested in commenting on this action should do so at this time. Please note that if EPA receives adverse comment on an amendment, paragraph, or section of this rule and if that provision may be severed from the remainder of the rule, EPA may adopt as final those provisions of the rule that are not the subject of an adverse comment. If we do not receive any comments, this action will be effective July 5, 2013.

IV. Statutory and Executive Order Reviews

Under the Clean Air Act, the Administrator is required to approve a SIP submission that complies with the provisions of the Clean Air Act and applicable Federal regulations. 42 U.S.C. 7410(k); 40 CFR 52.02(a). Thus, in reviewing SIP submissions, EPA's role is to approve state choices, provided that they meet the criteria of the Clean Air Act. Accordingly, this action merely approves state law as meeting Federal requirements and does not impose additional requirements beyond those imposed by state law. For that reason, this action:

- Is not a ''significant regulatory action'' subject to review by the Office of Management and Budget under Executive Order 12866 (58 FR 51735, October 4, 1993);
- Does not impose an information collection burden under the provisions of the Paperwork Reduction Act (44 U.S.C. 3501 *et seq.*);
- Is certified as not having a significant economic impact on a substantial number of small entities under the Regulatory Flexibility Act (5 U.S.C. 601 *et seq.*);
- Does not contain any unfunded mandate or significantly or uniquely affect small governments, as described in the Unfunded Mandates Reform Act of 1995 (Pub. L. 104–4);
- Does not have Federalism implications as specified in Executive Order 13132 (64 FR 43255, August 10, 1999);
- Is not an economically significant regulatory action based on health or safety risks subject to Executive Order 13045 (62 FR 19885, April 23, 1997);
- Is not a significant regulatory action subject to Executive Order 13211 (66 FR 28355, May 22, 2001);
- Is not subject to requirements of Section 12(d) of the National

Technology Transfer and Advancement Act of 1995 (15 U.S.C. 272 note) because application of those requirements would be inconsistent with the Clean Air Act; and

• Does not provide EPA with the discretionary authority to address, as appropriate, disproportionate human health or environmental effects, using practicable and legally permissible methods, under Executive Order 12898 (59 FR 7629, February 16, 1994).

In addition, this rule does not have tribal implications as specified by Executive Order 13175 (65 FR 67249, November 9, 2000), because the SIP is not approved to apply in Indian country located in the state, and EPA notes that it will not impose substantial direct costs on tribal governments or preempt tribal law.

The Congressional Review Act, 5 U.S.C. 801 *et seq.,* as added by the Small Business Regulatory Enforcement Fairness Act of 1996, generally provides that before a rule may take effect, the agency promulgating the rule must submit a rule report, which includes a copy of the rule, to each House of the Congress and to the Comptroller General of the United States. EPA will submit a report containing this action and other required information to the U.S. Senate, the U.S. House of Representatives, and the Comptroller General of the United States prior to publication of the rule in the **Federal Register**. A major rule cannot take effect until 60 days after it is published in the **Federal Register**. This action is not a ''major rule'' as defined by 5 U.S.C. 804(2).

Under section 307(b)(1) of the Clean Air Act, petitions for judicial review of this action must be filed in the United States Court of Appeals for the appropriate circuit by July 5, 2013. Filing a petition for reconsideration by the Administrator of this final rule does not affect the finality of this action for the purposes of judicial review nor does it extend the time within which a petition for judicial review may be filed, and shall not postpone the effectiveness of such rule or action. Parties with objections to this direct final rule are encouraged to file a comment in response to the parallel notice of proposed rulemaking for this action published in the proposed rules section of today's **Federal Register**, rather than file an immediate petition for judicial review of this direct final rule, so that EPA can withdraw this direct final rule and address the comment in the proposed rulemaking. This action may not be challenged later in proceedings to enforce its requirements. (See section 307(b)(2).)

List of Subjects in 40 CFR Part 52

Environmental protection, Air pollution control, Incorporation by reference, Intergovernmental relations, Reporting and recordkeeping requirements, Volatile organic compounds.

Dated: February 13, 2013.

Susan Hedman,

Regional Administrator, Region 5.

40 CFR part 52 is amended as follows:

PART 52—APPROVAL AND PROMULGATION OF IMPLEMENTATION PLANS

■ 1. The authority citation for part 52 continues to read as follows:

Authority: 42 U.S.C. 7401 *et seq.*

§ 52.719 [Removed and reserved]

■ 2. Remove and reserve § 52.719.

■ 3. Section 52.720 is amended by revising paragraph (c)(191) to read as follows:

§ 52.720 Identification of plan.

* * * * *

(c) * * *

(191) On September 14, 2012, Illinois submitted an amendment to its State Implementation Plan at 35 Illinois Administrative Code Part 223, which adds new consumer product categories and VOC limits for these products in Subpart B, and amends Subpart C to clarify applicability. 35 IAC Part 223 limits the amount of volatile organic compounds from consumer products and architectural and industrial maintenance coatings.

(i) Incorporation by reference.

(A) Illinois Administrative Code; Title 35: Environmental Protection; Subtitle B: Air Pollution; Chapter I: Pollution Control Board; Subchapter c: Emission Standards and Limitation for Stationary Sources; Part 223: Standards and Limitations for Organic material Emissions for Area Sources, effective May 4, 2012.

(B) Reserved.

* * * * *

[FR Doc. 2013–09301 Filed 5–3–13; 8:45 am]

BILLING CODE 6560–50–P

FEDERAL COMMUNICATIONS COMMISSION

47 CFR Parts 51, 54, and 69

[WC Docket No. 10–90, CC Docket No. 01–92, WC Docket No. 12–63, Transmittal Nos. 41, 28, and 57; DA 13–564]

Connect America Fund; Developing a Unified Intercarrier Compensation Regime

AGENCY: Federal Communications Commission.

ACTION: Final rule.

SUMMARY: In this document, the Federal Communications Commission's Wireline Competition Bureau clarifies and corrects certain provisions of the Commission's rules in response to recent petitions and other requests for clarification or correction of the new rules adopted as part of Universal Service Fund intercarrier compensation transformation reforms and also grants a limited waiver of the Commission's rules to address administrative concerns and rule inconsistencies.

DATES: Effective June 5, 2013.

FOR FURTHER INFORMATION CONTACT: Robin Cohn, Wireline Competition Bureau, Pricing Policy Division (202) 418–1520 or (202) 418–0484 (TTY); or Christopher S. Koves, Wireline Competition Bureau, Pricing Policy Division, (202) 418–1520 or (202) 418–0484 (TTY).

SUPPLEMENTARY INFORMATION: This is a summary of the Wireline Competition Bureau's Order in WC Docket No. 10–90, CC Docket No. 01–92, WC Docket No. 12–63, Transmittal Nos. 41, 28, and 57, DA 13–564, adopted and released on March 27, 2013. The full text of this document is available electronically via ECFS at *http://fjallfoss.fcc.gov/ecfs/or* may be downloaded at *http://hraunfoss.fcc.gov/edocs_public/attachmatch/DA-13-564A1.pdf.* The full text of this document is also available for public inspection during regular business hours in the FCC Reference Center, 445 12th Street SW., Room CY–A257, Washington, DC 20554. The complete text may be purchased from the Commission's copy contractor, Best Copy and Printing, Inc. (BCPI), 445 12th Street SW., Room CY–B402, Washington, DC 20554, (202) 488–5300 (voice) or (202) 488–5563 (facsimile) or via email at *fcc@bcpiweb.com.* To request materials in accessible formats for people with disabilities (*e.g.* braille, large print, electronic files, audio format, etc.) or to request reasonable accommodations (*e.g.* accessible format documents, sign language interpreters,

CART, etc.), send an email to *fcc504@fcc.gov* or call the Consumer & Governmental Affairs Bureau at (202) 418–0530 (voice) or (202) 418–0432 (TTY).

I. Introduction

1. In the *USF/ICC Transformation Order,* 76 FR 81,562 (Dec. 28, 2011), the Commission delegated to the Wireline Competition Bureau (Bureau) the authority to make any rule revisions necessary to ensure that the reforms adopted are properly reflected in the rules, including correcting any conflicts between the new or revised rules and existing rules, as well as addressing any omissions or oversights. In this Order, the Bureau acts pursuant to its delegated authority to clarify and correct certain rules in response to recent petitions and other requests for clarification or correction of the new rules. Specifically, the Bureau harmonizes inconsistent Connect America Fund intercarrier compensation (ICC) support eligibility certification and reporting filing deadlines contained in Parts 51 and 54 of the Commission's rules to coincide with the date on which carriers must file their annual access tariffs. The Bureau also amends the Part 51 rules to clarify the effects of the *USF/ICC Transformation Order* on National Exchange Carrier Association (NECA) traffic-sensitive tariff (''NECA pool'') pooling when carriers enter or exit the pool. The Bureau also addresses a petition for clarification filed by NECA by clarifying various NECA pooling requirements adopted in the *2012 Price Cap Conversion Order.* In addition, the Bureau amends rules governing the transition of rate-of-return carriers' intrastate switched access rates to correct an omission. The Bureau amends the Part 69 access charge rules to clarify the treatment of local switching support (LSS) in the calculation of the line-side port costs shift to the Common Line category and the allocation of Transport Interconnection Charge costs among the various access charge expense categories. The Bureau also clarifies the operation of the corporate operations expense limit and monthly $250 per-line cap on universal service support contained in Part 54. Finally, the Bureau corrects errors in the Part 51 rules implementing the Eligible Recovery true-up adjustment mechanism.

II. Harmonizing Connect America Fund ICC Certification Deadlines

2. *Background.* The *USF/ICC Transformation Order* adopted, among other things, an ICC reform timeline including rules that require carriers to adjust, over a period of years, many of their legacy interstate and intrastate switched access charges effective on July 1 of each of those years, with the ultimate goal of transitioning to a bill-and-keep regime. The Commission also adopted a recovery mechanism to mitigate the impact of reduced ICC revenues on carriers and to facilitate continued investment in broadband infrastructure, while providing greater certainty and predictability going forward than the *status quo.* The recovery mechanism allows incumbent local exchange carriers (LECs) to recover ICC revenues reduced due to the ICC reforms, up to a defined baseline, which is defined as ''Eligible Recovery.'' A carrier may recover a limited portion of its Eligible Recovery from its end users through a fixed monthly charge called the Access Recovery Charge (ARC), and the remainder of its Eligible Recovery, if it so elects, from Connect America Fund ICC support.

3. The *USF/ICC Transformation Order* also included new certification and reporting requirements for carriers that are eligible for and elect to receive Connect America Fund ICC support. In particular, sections 51.915(f)(6) and 51.917(f)(3) require price cap and rate-of-return carriers, respectively, that elect to receive Connect America Fund ICC support to certify to the Commission with their 2012 annual access tariff filings, and on April 1 in each subsequent year, that they properly calculated their Eligible Recovery and ARC rates in order to be eligible to receive Connect America Fund ICC support. Additionally, sections 54.304(c)(1) and (d)(1) require eligible price cap and rate-of-return carriers that elect to receive Connect America Fund ICC support, pursuant to sections 51.915 and 51.917, to file data with the Universal Service Administrative Company (USAC), the Commission, and relevant state commissions by no later than June 30, 2012, and by March 31 in subsequent years, establishing the carrier's projected funding eligibility amounts, including any true-ups, for the upcoming funding period.

4. In *ex parte* filings, NECA and the United States Telecom Association (USTelecom) requested modification of certain Commission rules to correct inconsistencies among the Commission's Connect America Fund ICC support eligibility certification deadlines. Specifically, NECA asked the Bureau to change the deadline contained in section 51.917(f)(3) so that rate-of-return carriers are required to file their annual Connect America Fund ICC support eligibility certifications with their annual access tariff filings. NECA states that this change is necessary because the April 1 deadline appears to be ''inconsistent with rules governing submission of data forecasts and calculation of Eligible Recovery and ARC rates associated with the normal annual access tariff filing process for rate-of-return carriers.'' NECA argues that data used for calculating ARC rates and monitoring purposes would likely change between the April 1 Connect America Fund ICC support eligibility certification deadline and mid-June, when annual access tariffs are typically filed, and that such changes would ''require numerous updates and revisions to data submitted previously by carriers, potentially requiring corrections and re-certification.'' USTelecom agrees and requests that ''the modification to section 51.917(f)(3) requested by NECA for rate-of-return carriers also be made to section 51.915(f)(6), which applies to price cap carriers.''

5. *Discussion.* We agree with NECA and USTelecom that revising the Connect America Fund ICC support eligibility certification deadlines to coincide with the annual interstate access tariff filing deadlines is appropriate. Currently, the rules contain three separate filing deadlines that essentially require carriers to develop the same underlying data: their Eligible Recovery calculation, their expected ARC rate levels, and their expected Connect America Fund ICC support amounts. We believe that harmonizing the certification deadlines will remove unnecessary administrative burdens and will also remove potential conflicts within the rules caused by inconsistent reporting deadlines adopted in the *USF/ICC Transformation Order.* Accordingly, we revise the Connect America Fund ICC certification filing deadlines contained in sections 51.915(f)(6) and 51.917(f)(3) so that they coincide with the annual interstate access tariff filing dates.

6. In addition to revising the filing deadlines as requested by NECA and USTelecom, we also, on our own motion, make a similar revision to a Connect America Fund ICC support eligibility data filing deadline contained in sections 54.304(c)(1) and (d)(1). These rule sections require price cap and rate-of-return carriers seeking Connect America Fund ICC support pursuant to sections 51.915 and 51.917, respectively, to file data with USAC, the Commission, and relevant state commissions establishing the amount of their Connect America Fund ICC support for the upcoming funding year by no later than March 31 of each year. For the same reasons discussed above,

the March 31 deadline is inconsistent with rules requiring carriers to submit Eligible Recovery calculations and ARC rates in mid-June with their annual access tariff filing. Accordingly, we revise the deadlines contained in sections 54.304(c)(1) and (d)(1) to coincide with the annual interstate access tariff filing dates.

7. The rule revisions adopted herein revise Connect America Fund ICC support eligibility filing requirements so that they coincide with carriers' annual access charge tariff filings. In the event that the rule revisions adopted herein are not effective before March 31, 2013, we find that good cause exists to waive applicable 2013 Part 51 and 54 filing deadlines to the extent described herein to eliminate the administrative burdens that would result from inconsistent reporting deadlines that the rule revisions we adopt are intended to remedy. Accordingly, this limited waiver, if needed, defers price cap and rate-of-return carriers' March 31, 2013 and April 1, 2013 Connect America Fund ICC support eligibility data filing and certification obligations to the date on which the 2013 annual access filings are required.

III. NECA Pooling Switched Access Rate Cap Adjustments

8. *Background.* As part of the transition to bill-and-keep, the rules adopted in the *USF/ICC Transformation Order* capped interstate and certain intrastate switched access rates for rate-of-return carriers at the rates that were in effect on December 29, 2011. This approach removed rate-of-return carriers from rate-of-return cost-based recovery for interstate switched access services. However, to the extent that rate-of-return carriers offer services other than interstate switched access service, such as common line and special access services, carriers remain subject to rate-of-return regulation for those services. Rate-of-return carriers, thus, must continue to establish their revenue requirements and rates for those services remaining under rate-of-return regulation.

9. In the *USF/ICC Transformation Order,* the Commission established a non-revenue neutral recovery mechanism that replaced rate-of-return cost-based recovery for interstate switched access services provided by rate-of-return carriers. The recovery mechanism carefully balanced carrier recovery from end users, other users of the switched access network such as interexchange carriers, and Connect America Fund ICC support. As part of this new recovery mechanism, rate-of-return carriers annually establish, as ''Eligible Recovery,'' an amount they are eligible to recover from end users or Connect America Fund ICC support in each year of the ICC transition. Eligible Recovery is determined in subsequent years by reducing a carrier's Base Period Revenue by an annual adjustment factor and by specified Expected Revenues for the upcoming tariff period. A rate-of-return carrier recovers its Eligible Recovery first from a capped ARC assessed on end users and, if it is eligible, may elect to recover any remaining amounts from Connect America Fund ICC support. The rules also contain a true-up procedure for rate-of-return carriers to correct for variances between actual and projected demand both for access services and the ARC.

10. In the *USF/ICC Transformation Order,* the Commission stated that ''carriers remain free to make elections regarding participation in the NECA pool and tariffing processes during the transition.'' Clearly, the *USF/ICC Transformation Order* contemplated a continuation of the pooling process for switched access services, but it did not provide procedures governing the switched access rate caps when carriers enter or exit the pool. In the *Designation Order,* which identified issues for investigation related to NECA's 2012 annual access tariff filings, the Bureau addressed how NECA should allocate projected switched access revenues among pooling carriers. In lieu of NECA's allocation of projected revenues entirely to the carrier that collected them, which would have effectively ignored the pooling process, the Bureau stated that it would be reasonable for NECA to ''allocate projected revenues for purposes of determining each LEC's projected 2012–13 interstate switched access revenues by allocating the projected pool revenues in relation to each LEC's interstate Base Period Revenue divided by the projected pool Base Period Revenue.'' Subsequently, NECA filed its direct case employing the procedure outlined in the *Designation Order.*

11. Prior to the *USF/ICC Transformation Order,* when carriers entered or exited the NECA pool, the pool switched access rates were adjusted to reflect changes to the pool. The rate caps codified in section 51.909(a), however, do not contain a mechanism for the pool switched access rate caps to increase or decrease when carriers enter or exit the pool. Absent such a mechanism, the pool switched access rates will not realize revenues at the level that would provide pool settlements to the remaining pooling carriers at the level they would have received if carriers had not exited the pool. Furthermore, the Eligible Recovery for the pooling carriers would increase or decrease by the revenue difference between that produced by the preexisting rate caps and the adjusted rate caps reflecting the effects of pool entry or exit. Such funding is outside the scope of contemplated Connect America Fund ICC support, which was intended to help mitigate the effects of ICC reforms, not to offset the revenue effects of changes in NECA pool participation. Thus, without a method for adjustment to reflect pool entry and exit, the section 51.909(a) rate caps result in an unintended shift in recovery between switched access charges and Connect America Fund ICC support.

12. Further, prior to the *USF/ICC Transformation Order,* just as NECA revised its rates when a carrier exited the pool, an exiting carrier was required to establish rates based on its own costs under either section 61.38 or 61.39 of the Commission's rules. The switched access rate caps codified in section 51.909(a) do not, however, detail how an exiting carrier should establish its switched access rate caps. In the *2012 Price Cap Conversion Order,* the Commission determined that each exiting pooling carrier had to adjust the NECA switched access rates it was charging to reflect the extent of its net contribution to the pool and to establish switched access rates that would then become the capped switched access rates for that carrier. These complimentary actions by NECA and an exiting carrier together further the policies of the *USF/ICC Transformation Order* and *2012 Price Cap Conversion Order.*

13. *Discussion.* We find that providing a method for adjusting NECA pool switched access rate caps to reflect pool entry and exit corrects an omission in the rate cap rules. Therefore, we amend section 51.909(a) to address this omission, and to avoid creating unintended burdens on Connect America Fund ICC support.

14. Specifically, as set forth in the Appendix, we revise the Commission's rules to require NECA, when a carrier enters the NECA pool, to adjust its switched access rate caps to account for the difference between the entering carrier's revenues for the preceding calendar year based on the entering carrier's switched access rates and what the entering carrier's revenues for the preceding calendar year would have been if calculated using NECA switched access rates. Additionally, we revise the Commission's rate cap rules to include a methodology that NECA must use to adjust its switched access rate caps

when carriers exit the NECA pool. Finally, we revise the Commission's rules to clarify how exiting rate-of-return carriers will establish their switched access rate caps to reflect the amount by which the exiting carrier was a NECA pool net contributor or net recipient. These rule revisions effectuate the Commission's intent that NECA pooling remain available during the transition, consistent with its historical operation, and ensure that the balance between interstate switched access revenues and Connect America Fund ICC support is maintained and does not affect a rate-of-return carrier's decision to enter or exit the NECA pool. These rule revisions also ensure that no party entering or exiting the NECA pool will receive a windfall as a result of its election, which advances the Commission's pooling neutral policies.

15. Effects of Changes to Interstate Switched Access Rates on Intrastate Rates. We also amend the Commission's rules as set forth in the Appendix to clarify the flow-through effects that interstate switched access rate cap adjustments resulting from NECA pool entry or exit will have on intrastate switched access rates. An underlying objective of the *USF/ICC Transformation Order* was to create a uniform, national framework for the ICC transition. The *USF/ICC Transformation Order* adopted rules that establish maximum intrastate switched access rate levels based on their relationship to interstate rate levels. In a subsequent order, the Bureau clarified the treatment of intrastate switched access rates that are below interstate levels when the intrastate composite switched access rate was higher than the composite interstate switched access rate. Because the Commission's rules require intrastate switched access rate levels to be set based on interstate rate levels, we clarify that if NECA's interstate switched access rates decrease, pooling carriers must also reduce their intrastate rates, consistent with the framework established in the *USF/ICC Transformation Order.* Similarly, we clarify that if NECA's switched access rates increase, pooling carriers whose intrastate rates would have been at parity with interstate rates in 2013 or that already were at parity with interstate rates are required to increase their intrastate rates.

16. We further clarify that carriers exiting the NECA traffic-sensitive pool must reduce any intrastate switched access rates that are higher than their interstate switched access rates to the levels established in connection with exiting the pool pursuant to the rate cap revisions adopted in this Order. In all cases, these new or revised rates will become the capped switched access rates set pursuant to 51.909(a)(1) for purposes of applying other rules relying on such rates or rate caps. In addition, the revised rate caps will be used to establish a carrier's Eligible Recovery going forward. Finally, we clarify that, if a switched access rate is revised as a result of the NECA pool entry and exit process, any competitive local exchange carrier (CLEC) benchmarking to that rate must benchmark to the revised rate.

IV. NECA Petition for Clarification of Pooling Issues

17. *Background.* On December 27, 2012, NECA filed a petition seeking clarification of several NECA pooling-related issues flowing from the *2012 Price Cap Conversion Order.* In that order, the Commission granted a waiver to allow Consolidated Communications, Inc., Frontier Communications Corporation and Windstream Corporation to convert their respective average schedule study areas from rate-of-return regulation to the regulatory requirements applicable to price cap carriers. The Commission also granted a waiver of section 51.909 to the extent necessary to allow NECA to increase its switched access rates to reflect the lost contributions to the switched access portion of the NECA pool.

18. *Discussion.* NECA first asks the Commission to clarify that NECA pooling carriers do not need to change their ''Step 1'' intrastate rates to account for interstate rate adjustments related to the converting carriers' exit from the NECA pool. The Step 1 intrastate rate reductions required carriers to reduce their intrastate access rates, effective on July 3, 2012, based on one-half of the difference between the revenue they would have received from transitional intrastate access service if it had been priced at the capped interstate access rates and the revenue received from intrastate access rates. NECA notes that if the Step 1 fifty-percent requirement were ongoing, the increase in interstate access rates on January 1, 2013 would have similarly required an increase in intrastate rates on January 1, 2013. If intrastate rates were adjusted in early 2013 to reflect the *2012 Price Cap Conversion Order,* these adjustments would only be effective until carriers made their 2013 annual access tariff filings, which, under the ICC transition rules, require intrastate switched access rates subject to the ICC transition to be no higher than the corresponding interstate rates as of July 1, 2013. We believe that adjusting intrastate rates in this manner would have presented an unnecessary administrative burden with little, if any, offsetting benefit. If the Commission had intended to require such adjustments, carriers would have been precluded from doing so without further Commission action due to the prohibition on rate increases. Therefore, we clarify that the Step 1 reduction was a one-time calculation that occurred on July 3, 2012 with no ongoing intrastate ratemaking obligation as a result of the waiver. Thus, carriers were not required to recalculate and re-file intrastate rates as of January 1, 2013.

19. NECA also requests confirmation that NECA pooling carriers are not required to impute differences between the current intrastate rates and what the intrastate rates would be if adjusted to correspond with the increase in interstate rates required by the *2012 Price Cap Conversion Order.* NECA notes that the Commission has required carriers to use the ''maximum assessable rate'' in projecting 2012–13 intrastate revenues for purposes of calculating Eligible Recovery. As we clarified above, no increase in intrastate rates is required in this context. Thus, there is no higher rate to impute, and rate-of-return carriers must use the highest intrastate switched access rates they could have charged in calculating true-ups to their 2012–13 tariff year Eligible Recovery.

20. Finally, NECA asks the Commission to clarify whether, when calculating ''Step 2'' transitional intrastate switched access rates, NECA pooling carriers whose interstate switched access rates rose as of January 1, 2013 as a result of the *2012 Price Cap Conversion Order* should raise their intrastate switched access rates to match their interstate rate levels by July 1, 2013. The rules we clarify in Section III above, which maintain interstate and intrastate switched access rate parity when a rate-of-return carrier enters or exits the NECA pool, address this request by clarifying that NECA pooling carriers must, in the circumstances described in the NECA Petition, raise their intrastate switched access rates to match interstate switched access rate levels on July 1, 2013, subject to the same rate structure and all subsequent rate and rate structure modifications. A carrier that does not raise its intrastate rates would be required to impute the higher rates in projecting its switched access revenues for the 2013–14 tariff period when calculating its Eligible Recovery.

V. ''STEP 2'' Transitional Intrastate Access Service Rates

21. *Background.* The *USF/ICC Transformation Order,* among other things, adopted rules setting forth a

transition path to bill-and-keep for certain terminating switched end office and transport rates, certain originating and terminating dedicated transport rates, and certain legacy reciprocal compensation rates. As part of the ''Step 1'' transition, beginning July 1, 2012, price cap and rate-of-return carriers were required to reduce intrastate terminating switched end office and transport rates, originating and terminating dedicated transport rates, and reciprocal compensation rates by fifty percent of the difference between such rates and each carrier's interstate access rates as of December 29, 2011. As part of the ''Step 2'' transition, beginning July 1, 2013, price cap and rate-of-return carriers are required to reduce their intrastate switched access rates, including originating and terminating dedicated transport switched access service rates, to parity with interstate switched access rates. However, the rules adopted in the *USF/ICC Transformation Order* to implement Step 2 of the transition inadvertently omitted originating and terminating dedicated transport switched access service rates from the list of rate-of-return carrier rate elements subject to the Step 2 reductions that must be reduced to the interstate level by July 1, 2013.

22. *Discussion.* We correct this omission in the Commission's rules by amending the rules governing rate-of-return carriers' transitional intrastate access rates. We revise the transitional intrastate access service rate schedule in section 51.909(c)(1) to include originating and terminating dedicated transport switched access services rates within the intrastate rate elements that must be reduced to parity with interstate switched access rates beginning July 1, 2013.

VI. Treatment of Local Switching Support in Part 69 Calculations

23. *Background.* In the *USF/ICC Transformation Order,* the Commission eliminated Local Switching Support (LSS) as a separate universal service support mechanism for rate-of-return carriers beginning July 1, 2012. However, the amount that was previously recovered through LSS is now accounted for in a rate-of-return carrier's Eligible Recovery. Further, LSS continues to be listed as a factor in making certain access charge calculations pursuant to Part 69 of the Commission's rules. Treating LSS as zero in these circumstances could, absent clarification, enable rate-of-return carriers to claim duplicative recovery for a portion of the amount previously recovered through LSS, which is contrary to the intent of rules adopted in the *USF/ICC Transformation Order.* Accordingly, we revise and clarify the Commission's rules to resolve a potential conflict that exists between the calculation of Eligible Recovery under section 51.917(d) and a potential reading of sections 69.306(d)(2) and 69.415(c).

24. Section 51.917(d) provides the method for calculating a rate-of-return carrier's Eligible Recovery throughout the ICC reform transition period. Section 51.917(d)(1) states that ''[n]otwithstanding any other provision of the Commission's rules, a Rate-of-Return Carrier may recover the amounts specified in this paragraph [paragraph (d)] through the mechanisms described in paragraphs (e) and (f) of this section.'' We read ''notwithstanding'' in this context to mean that other rules that are inconsistent with the requirements of paragraph (d), or that would produce a result inconsistent with the policies of the *USF/ICC Transformation Order,* must be interpreted consistent with section 51.917. Broadly speaking, section 51.917 establishes a rate-of-return carrier's Base Period Revenue. A rate-of-return carrier's Base Period Revenue includes, among other things, its projected 2011 Interstate Switched Access Revenue Requirement. A rate-of-return carrier's projected 2011 Interstate Switched Access Revenue Requirement, in turn, includes the revenue requirement that the rate-of-return carrier projected to recover through LSS in the 2011–12 tariff period. Accordingly, the amount previously recovered through LSS has been moved into a rate-of-return carrier's revenue requirement, and is accounted for in the calculation of a rate-of-return carrier's Eligible Recovery.

25. *Section 69.306(d)(2) Line-Side Port Costs Calculations.* Some parties have questioned whether the elimination of LSS as a separate universal service support mechanism could be interpreted as altering the section 69.306(d)(2) access charge calculation that shifts line-side port costs to the Common Line category. Section 69.306(d)(2) provides that ''line-side port costs shall be assigned to the Common Line category. Such amount shall be determined after any Local Switching support has been removed from the interstate Local Switching revenue requirement.'' One possible interpretation of this provision is that because LSS has been eliminated, there is no amount by which to reduce the Local Switching revenue requirement for purposes of determining the line-side port costs to shift to the Common Line category. Absent clarification, rate-of-return carriers might apply the section 69.306(d)(2) thirty percent default factor for calculating line-side port costs to the entire, unreduced, Local Switching revenue requirement in order to determine the amount to be shifted to the Common Line category.

26. We clarify that reading section 69.306(d)(2) to allow rate-of-return carriers to apply the thirty percent default factor to the entire Local Switching revenue requirement would conflict with section 51.917 because the revenue recovery provided for what was formerly LSS is already accounted for in a rate-of-return carrier's Base Period Revenue. In essence, such an interpretation would allow a carrier to recover thirty percent of its former LSS amount through higher Subscriber Line Charges, or, more likely, through higher Interstate Common Line Support (ICLS), without reducing the amount of Eligible Recovery it would be entitled to receive under section 51.917(d). Such a result, where rate-of-return carriers recover thirty percent of what was formerly LSS through a multi-million dollar line-port cost shift to the Common Line category, was not anticipated by the *USF/ICC Transformation Order.*

27. Furthermore, duplicative recovery is inconsistent with the policy goals of the *USF/ICC Transformation Order.* Specifically, section 51.917(d)(1)(vii) provides that ''[i]f a Rate-of-Return Carrier recovers any costs or revenues that are already being recovered as Eligible Recovery through Access Recovery Charges or the Connect America Fund from another source, that carrier's ability to recover reduced switched access revenue from Access Recovery Charges or the Connect America Fund shall be reduced to the extent it receives duplicative recovery.'' To avoid the potential for duplicative recovery and the need to adjust future Eligible Recovery calculations to account for such duplicative recovery, we revise section 69.306(d). Specifically, we clarify that a rate-of-return carrier shall assign line-side port costs to the Common Line category equal to the line-side port costs it shifted in its 2011 Interstate Switched Access Revenue Requirement calculation. The Bureau found this approach reasonable in the development of the average schedule formulas. This approach is consistent with capping switched access rates and avoids requiring carriers to make unnecessary calculations in the cost allocation process.

28. *Section 69.415 Transport Interconnection Charge Calculations.* Similar to section 69.306(d)(2), section 69.415 includes LSS in calculations to

determine the allocation of the Transport Interconnection Charge (TIC) among the various access charge expense categories. The potential for including a LSS value of zero in the calculation specified in section 69.415 could affect the calculation of Eligible Recovery in a manner contrary to the Commission's intent and similar to that described in the preceding paragraph. Therefore, we revise section 69.415 to clarify that the amount of a rate-of-return carrier's TIC costs to be reallocated to each category must equal the amount of TIC costs the carrier shifted to each category in its 2011 Interstate Switched Access Revenue Requirement calculation. The Bureau found this approach reasonable in the development of the average schedule formulas, and we likewise utilize it here.

VII. Corporate Operations Expense Limit and Monthly $250 per Line Cap

29. *Background.* In the *USF/ICC Transformation Order,* the Commission adopted limits on the recovery of certain costs through universal service mechanisms. Specifically, the rules adopted in the *USF/ICC Transformation Order* limited the amount of corporate operations expenses that a rate-of-return carrier could recover through ICLS in section 54.901(c). The Commission also adopted a presumptive monthly $250 per-line cap on the amount of total high-cost universal service support, which would reduce the amount of ICLS received by certain carriers. Several parties have questioned the extent to which disallowed expenses or reduced ICLS may be recovered through the NECA pooling processes.

30. Discussion. In this Order, we clarify that the recovery limitations for corporate operations expenses adopted in the *USF/ICC Transformation Order* shall operate as limits on a rate-of-return carrier's ability to recover the disallowed amounts through the NECA pooling processes. Permitting carriers to receive increased pool settlements to offset such reductions to ICLS would effectively create an implicit support flow to replace the disallowed explicit support. This treatment is also comparable to the effect that a non-pooling rate-of-return carrier would experience because it cannot look to other carriers to recover amounts it does not receive as a result of the recovery limitations. Therefore, it is appropriate for NECA to modify its procedures such that the effect of the corporate operations expense limit and the monthly $250 per-line cap are not shifted to common line NECA pooling carriers. In addition to clarifying the scope of the limitations, we revise section 54.901(c) to clarify operation of the limitations discussed above as they relate to interstate corporate operations expenses allocated to the Common Line category, consistent with the *USF/ICC Transformation Order.*

VIII. True-Up Adjustment Mechanisms

31. *Background.* In the *USF/ICC Transformation Order,* the Commission required rate-of-return carriers to project ICC revenues for use in determining Eligible Recovery. Because projected demand, an input needed in order to project ICC revenues, likely differs from actual demand, the Commission adopted a true-up procedure for rate-of-return carriers to adjust their Eligible Recovery to account for any difference between projected and actual switched access revenues resulting from demand variations. The Commission also adopted true-up procedures for price cap and rate-of-return carriers to adjust their Eligible Recovery to account for any difference between projected and actual ARC revenues resulting from ARC demand variations. Under these true-up procedures, a carrier's Eligible Recovery for the period reflecting the true-up would be reduced if the carrier's actual demand exceeded projected demand; likewise a carrier's Eligible Recovery would be increased if the carrier's actual demand was less than projected demand.

32. *Discussion.* The rules implementing the true-up adjustments do not properly calculate the difference between projected and actual revenues resulting from the difference in projected and actual demand consistent with the *USF/ICC Transformation Order.* By not correctly accounting for actual revenues, true-up revenue is incorrectly calculated and is, therefore, not correctly reflected in the steps for calculating Eligible Recovery each year as intended by the *USF/ICC Transformation Order.* Revising the rules is necessary in order for price cap and rate-of-return carriers to correctly implement the true-up procedures adopted in the *USF/ICC Transformation Order.* Therefore, we amend sections 51.915 and 51.917 so that they correctly set out the method for determining the amount of any true-up consistent with the *USF/ICC Transformation Order.*

IX. Procedural Matters

A. Paperwork Reduction Act

33. This document does not contain new or modified information collection requirements subject to the Paperwork Reduction Act of 1995 (PRA). Therefore, the Order does not contain any new or modified information collection burdens for small businesses with fewer than 25 employees, pursuant to the Small Business Paperwork Relief Act of 2002.

B. Final Regulatory Flexibility Act Certification

34. The Regulatory Flexibility Act of 1980, as amended (RFA), requires agencies to prepare a regulatory flexibility analysis for rulemaking proceedings, unless the agency certifies that ''the rule will not have a significant economic impact on a substantial number of small entities.'' The RFA generally defines ''small entity'' as having the same meaning as the terms ''small business,'' ''small organization,'' and ''small governmental jurisdiction.'' In addition, the term ''small business'' has the same meaning as the term ''small business concern'' under the Small Business Act. A small business concern is one which: (1) Is independently owned and operated; (2) is not dominant in its field of operation; and (3) satisfies any additional criteria established by the Small Business Administration (SBA).

35. We hereby certify that the rule revisions adopted in this Order will not have a significant economic impact on a substantial number of small entities. This Order amends rules adopted in the *USF/ICC Transformation Order* by correcting conflicts between the new or revised rules and existing rules, as well as addressing omissions or oversights. These revisions do not create any burdens, benefits, or requirements that were not addressed by the Final Regulatory Flexibility Analysis attached to the *USF/ICC Transformation Order.* The Commission will send a copy of this Order, including a copy of this final certification, to the Chief Counsel for Advocacy of the Small Business Administration. In addition, the Order (or a summary thereof) and certification will be published in the **Federal Register**.

C. Congressional Review Act

36. The Commission will send a copy of this Order to Congress and the Government Accountability Office pursuant to the Congressional Review Act.

X. Ordering Clauses

37. Accordingly, *it is ordered,* pursuant to the authority contained in sections 1, 2, 4(i), 201–203, 220, 251, 252, 254, 303(r), and 403 of the Communications Act of 1934, as amended, 47 U.S.C. 151, 152, 154(i), 201–203, 220, 251, 254, 252, 303(r), and 403, and pursuant to sections 0.91,

0.201(d), 0.291, 1.3, and 1.427 of the Commission's rules, 47 CFR 0.91, 0.201(d), 0.291, 1.3, and 1.427 and pursuant to the delegation of authority in paragraph 1404 of 26 FCC Rcd 17663 (2011), that this Order *is adopted,* effective thirty (30) days after publication of the text or summary thereof in the **Federal Register**.

38. *It is further ordered* that Parts 51, 54 and 69 of the Commission's rules, 47 CFR 51.909, 51.915, 51.917, 54.304, 69.306, and 69.415 are *amended* as set forth in the Appendix, and such rule amendments shall be effective 30 days after the date of publication of the rule amendments in the **Federal Register**.

39. *It is further ordered* that, pursuant to section 1.3 of the Commission's rules, 47 CFR 1.3, and pursuant to the authority delegated in sections 0.91 and 0.291 of the Commission's rules, 47 CFR 0.91, 0.291, sections 51.915(f)(6), 51.917(f)(3), 54.304(c)(1), (d)(1), 47 CFR 51.915(f)(6), 51.917(f)(3), 54.304(c)(1), and (d)(1), *are waived* effective upon release of this Order for the limited purpose specified in paragraph 7, *supra,* of this Order.

40. *It is further ordered,* pursuant to the authority contained in sections 1–4 of the Communications Act of 1934, as amended, 47 U.S.C. 151–154, and the authority delegated in sections 0.91 and 0.291 of the Commission's rules, 47 CFR 0.91 and 0.291, that the National Exchange Carrier Association, Inc. Petition for Clarification or Waiver, WC Docket No. 12–63, Transmittal Nos. 41, 28, 57 (filed Dec. 27, 2012) is *granted* to the extent provided herein and *dismissed as moot* to the extent provided herein.

41. *It is further ordered* that the Commission *shall send* a copy of this Order to Congress and the Government Accountability Office pursuant to the Congressional Review Act.

42. *It is further ordered* that the Commission's Consumer and Governmental Affairs Bureau, Reference Information Center, *shall send* a copy of this Order, including the Final Regulatory Flexibility Certification, to the Chief Counsel for Advocacy of the Small Business Administration.

List of Subjects in 47 CFR Parts 51, 54, and 69

Communications common carriers, Reporting and recordkeeping requirements, Telecommunications, Telephone.

Federal Communications Commission.

Deena Shetler,

Associate Bureau Chief, Wireline Competition Bureau.

Final Rule

For the reasons discussed in the preamble, the Federal Communications Commission amends 47 CFR parts 51, 54 and 69 as follows:

PART 51—INTERCONNECTION

■ 1. The authority citation for part 51 continues to read as follows:

Authority: Sections 1–5, 7, 201–05, 207–09, 218, 220, 225–27, 251–54, 256, 271, 303(r), 332, 706 of the Telecommunication Act of 1996, 48 Stat. 1070, as amended, 1077; 47 U.S.C. 151–55, 157, 201–05, 207–09, 218, 220, 225–27, 251–54, 256, 271, 303(r), 332, 1302, 47 U.S.C. 157 *note,* unless otherwise noted.

■ 2. Amend § 51.909 by adding paragraphs (a)(4) through (6) and revising paragraphs (a)(3) and (c)(1) to read as follows:

§ 51.909 Transition of rate-of-return carrier access charges.

(a) * * *

(3) Except as provided in paragraphs (a)(6) and (b)(4) of this section, nothing in this section obligates or allows a Rate-of-Return Carrier that has intrastate rates lower than its functionally equivalent interstate rates to make any intrastate tariff filing or intrastate tariff revisions raising such rates.

(4) Notwithstanding the requirements of paragraph (a)(1) of this section, if a Rate-of-Return Carrier enters or exits the National Exchange Carrier Association (Association), as defined in § 69.2(d) of this chapter, traffic-sensitive tariff pursuant to the provisions of § 69.3(e)(6) of this chapter, the Association shall adjust its switched access rate caps referenced in paragraph (a)(1) of this section.

(i) For each entering Rate-of-Return Carrier, the Association shall:

(A) Determine each entering Rate-of-Return Carrier's interstate switched access revenues for the preceding calendar year;

(B) Determine the revenues that would have been realized by the entering Rate-of-Return Carrier in the preceding calendar year if it had used the Association's switched access rates (employing the rates for the appropriate bands) as of December 31 of the preceding year and the entering Rate-of-Return Carrier's switched access demand used to determine switched access revenues under paragraph (a)(4)(i)(A) of this section; and

(C) Subtract the sum of the revenues determined pursuant to paragraph (a)(4)(i)(B) of this section from the sum of the revenues determined pursuant to paragraph (a)(4)(i)(A) of this section.

(ii) The Association shall determine the amount by which each exiting Rate-of-Return Carrier is a net contributor or net recipient to or from the switched access segment of the Association pool as follows:

(A) The Association shall calculate the difference between each exiting Rate-of-Return Carrier's 2011–2012 tariff year projected interstate switched access revenues excluding Local Switching Support and the Rate-of-Return Carrier's projected switched access pool settlements excluding Local Switching Support for the same period with a net contribution amount being treated as a positive amount and a net recipient amount being treated as a negative amount. The Association shall divide the calculated difference by the Rate-of-Return Carrier's 2011–2012 tariff year projected interstate switched access revenues excluding Local Switching Support to produce a percent net contribution or net receipt factor.

(B) The Association shall multiply the factor calculated in paragraph (a)(4)(ii)(A) of this section by the Rate-of-Return Carrier's switched access revenues for the preceding calendar year to yield the amount of the Rate-of-Return Carrier's net contribution or net receipts for the calendar year.

(iii) To determine the Association's adjusted switched access rate caps, the Association shall:

(A) Add the amounts calculated under paragraphs (a)(4)(i) and (a)(4)(ii) of this section;

(B) Divide the amount determined in paragraph (a)(4)(iii)(A) of this section by the preceding year's switched access revenues of the Rate-of-Return Carriers that will participate in the Association traffic-sensitive tariff for the next annual tariff period;

(C) The Association shall proportionately adjust its June 30 switched access rate caps by the percentage amount determined in paragraph (a)(4)(iii)(B) of this section.

(iv) The interstate switched access rate caps determined pursuant to paragraph (a)(4)(iii)(C) of this section shall be the new capped interstate switched access rates for purposes of § 51.909(a). The Association shall provide support in its annual access tariff filing to justify the revised interstate switched access rate caps, the Access Recovery Charges that will be assessed, and the amount of Connect America Fund ICC support each carrier will be eligible to receive.

(5) A Rate-of-Return Carrier exiting the Association traffic-sensitive tariff

pursuant to § 69.3(e)(6) of this chapter must establish new switched access rate caps as follows:

(i) The Rate-of-Return Carrier shall multiply the factor determined in paragraph (a)(4)(ii)(A) of this section by negative one and then proportionately adjust the Association's capped switched access rates as of the date preceding the effective date of the exiting Rate-of-Return Carrier's next annual tariff filing by this percentage. A Rate-of-Return Carrier that was a net contributor to the pool will have rate caps that are lower than the Association's switched access rate caps, while a net recipient will have switched access rate caps that are higher than the Association's switched access rate caps;

(ii) The interstate switched access rate caps determined pursuant to paragraph (a)(5)(i) of this section shall be the new capped interstate switched access rates of the exiting Rate-of-Return Carrier for purposes of § 51.909(a). An exiting Rate-of-Return Carrier shall provide support in its annual access tariff filing to justify the revised interstate switched access rate caps, the Access Recovery Charges that will be assessed, and the amount of Connect America Fund ICC support the carrier will be eligible to receive.

(6) If the Association revises its interstate switched access rate caps pursuant to paragraph (a)(4) of this section, each Rate-of-Return Carrier participating in the upcoming annual Association traffic-sensitive tariff shall:

(i) Revise any of its intrastate switched access rates that would have reached parity with its interstate switched access rates in 2013 to parity with the revised interstate switched access rate levels;

(ii) The Association shall provide Rate-of-Return Carriers that are participating in the Association traffic-sensitive pool with notice of any revisions the Association proposes under paragraph (a)(4) of this section no later than May 1.

* * * * *

(c) * * *

(1) Transitional Intrastate Access Service rates shall be no higher than the Rate-of-Return Carrier's interstate Terminating End Office Access Service, Terminating Tandem-Switched Transport Access Service, and Originating and Terminating Dedicated Transport Access Service rates and subject to the same rate structure and all subsequent rate and rate structure modifications. Except as provided in paragraph (c)(2) of this section, nothing in this section obligates or allows a Rate-of-Return Carrier that has intrastate rates lower than its functionally equivalent interstate rates to make any intrastate tariff filing or intrastate tariff revisions to increase such rates.

* * * * *

■ 3. Amend § 51.915 by revising paragraphs (b)(13), (d)(1)(iii)(F), (d)(1)(iv)(F), (d)(1)(v)(F), (d)(1)(vi)(G), (d)(1)(vii)(H), (d)(1)(viii) and (f)(6) to read as follows:

§ 51.915 Recovery mechanism for price cap carriers.

* * * * *

(b) * * *

(13) *True-up Revenues for Access Recovery Charge.* True-up revenues for Access Recovery Charge are equal to (projected demand minus actual realized demand for Access Recovery Charges) times the tariffed Access Recovery Charge. This calculation shall be made separately for each class of service and shall be adjusted to reflect any changes in tariffed rates for the Access Recovery Charge. Realized demand is the demand for which payment has been received by the time the true-up is made.

* * * * *

(d) * * *

(1) * * *

(iii) * * *

(F) An amount equal to True-up Revenues for Access Recovery Charges for the year beginning July 1, 2012.

(iv) * * *

(F) An amount equal to True-up Revenues for Access Recovery Charges for the year beginning July 1, 2013.

(v) * * *

(F) An amount equal to True-up Revenues for Access Recovery Charges for the year beginning July 1, 2014.

(vi) * * *

(G) An amount equal to True-up Revenues for Access Recovery Charges for the year beginning July 1, 2015.

(vii) * * *

(H) An amount equal to True-up Revenues for Access Recovery Charges for the year beginning July 1, 2016.

(viii) Beginning July 1, 2019, and in subsequent years, a Price Cap Carrier's eligible recovery will be equal to the amount calculated in paragraph (d)(1)(vii)(A) through (d)(1)(vii)(H) of this section before the application of the Price Cap Carrier Traffic Demand Factor applicable in 2018 multiplied by the appropriate Price Cap Carrier Traffic Demand Factor for the year in question, and then adding an amount equal to True-up Revenues for Access Recovery Charges for the year beginning July 1 two years earlier.

* * * * *

(f) * * *

(6) A Price Cap Carrier that elects to receive CAF ICC support must certify with its annual access tariff filing that it has complied with paragraphs (d) and (e) of this section, and, after doing so, is eligible to receive the CAF ICC support requested pursuant to paragraph (f) of this section.

■ 4. Amend § 51.917 by revising paragraphs (b)(5), (b)(6), (d)(1)(iii)(D) and (f)(3) to read as follows:

§ 51.917 Revenue recovery for Rate-of-Return Carriers.

* * * * *

(b) * * *

(5) *True-up Adjustment.* The True-up Adjustment is equal to the True-up Revenues for any particular service for the period in question.

(6) *True-up Revenues.* True-up Revenues from an access service are equal to (projected demand minus actual realized demand for that service) times the default transition rate for that service specified by § 51.909. True-up Revenues from a non-access service are equal to (projected demand minus actual realized net demand for that service) times the default transition rate for that service specified by § 20.11(b) of this chapter or § 51.705. Realized demand is the demand for which payment has been received, or has been made, as appropriate, by the time the true-up is made.

* * * * *

(d) * * *

(1) * * *

(iii) * * *

(D) An amount equal to True-up Revenues for Access Recovery Charges for the year beginning July 1, 2012.

* * * * *

(f) * * *

(3) A Rate-of-Return Carrier that elects to receive CAF ICC support must certify with its annual access tariff filing that it has complied with paragraphs (d) and (e), and, after doing so, is eligible to receive the CAF ICC support requested pursuant to paragraph (f) of this section.

* * * * *

PART 54—UNIVERSAL SERVICE

■ 5. The authority citation for part 54 continues to read as follows:

Authority: Secs. 5, 48 Stat. 1068, as amended; 47 U.S.C. 155.

■ 6. Amend § 54.304 by revising paragraphs (c)(1) and (d)(1) to read as follows:

§ 54.304 Administration of Connect America Fund Intercarrier Compensation Replacement.

* * * * *

(c) * * *

(1) A Price Cap Carrier seeking CAF ICC support pursuant to § 51.915 of this

chapter shall file data with the Administrator, the Commission, and the relevant state commissions no later than June 30, 2012, for the first year, and on the date it files its annual access tariff filing with the Commission, in subsequent years, establishing the amount of the Price Cap Carrier's eligible CAF ICC funding during the upcoming funding period pursuant to § 51.915 of this chapter. The amount shall include any true-ups, pursuant to § 51.915 of this chapter, associated with an earlier funding period.

* * * * *

(d) * * *

(1) A Rate-of-Return Carrier seeking CAF ICC support shall file data with the Administrator, the Commission, and the relevant state commissions no later than June 30, 2012, for the first year, and on the date it files its annual access tariff filing with the Commission, in subsequent years, establishing the Rate-of-Return Carrier's projected eligibility for CAF ICC funding during the upcoming funding period pursuant to § 51.917 of this chapter. The projected amount shall include any true-ups, pursuant to § 51.917 of this chapter, associated with an earlier funding period.

* * * * *

■ 7. Amend § 54.901 by revising paragraphs (c) introductory text and (c)(2) to read as follows:

§ 54.901 Calculation of Interstate Common Line Support.

* * * * *

(c) Beginning January 1, 2012, for purposes of calculating the amount of Interstate Common Line Support determined pursuant to paragraph (a) of this section that a non-price cap carrier may receive, the corporate operations expense allocated to the Common Line Revenue Requirement, pursuant to § 69.409 of this chapter, shall be limited to the lesser of:

* * * * *

(2) The portion of the monthly per-loop amount computed pursuant to § 36.621(a)(4)(iii) of this chapter that would be allocated to the interstate Common Line Revenue Requirement pursuant to § 69.409 of this chapter.

* * * * *

PART 69—ACCESS CHARGES

■ 8. The authority citation for part 69 continues to read as follows:

Authority: 47 U.S.C. 154, 201, 202, 203, 205, 218, 220, 254, 403.

■ 9. Amend § 69.306 by revising paragraph (d)(2) and adding paragraph (d)(3) to read as follows:

§ 69.306 Central office equipment (COE).

* * * * *

(d) * * *

(2) Until June 30, 2012, for non-price cap local exchange carriers, line-side port costs shall be assigned to the Common Line rate element. Such amount shall be determined after any local switching support has been removed from the interstate Local Switching revenue requirement. Non-price cap local exchange carriers may use thirty percent of the interstate Local Switching revenue requirement, minus any local switching support, as a proxy for allocating line port costs to the Common Line category.

(3) Beginning July 1, 2012, a non-price cap local exchange carrier shall assign line-side port costs to the Common Line rate element equal to the amount of line-side port costs it shifted in its 2011 projected Interstate Switched Access Revenue Requirement.

* * * * *

■ 10. Amend § 69.415 by revising paragraphs (b) and (c) introductory text and adding paragraph (d) to read as follows:

§ 69.415 Reallocation of certain transport expenses.

* * * * *

(b) Until June 30, 2012, the amount to be reallocated is limited to the total revenues recovered through the interconnection charge assessed pursuant to § 69.124 for the 12–month period ending June 30, 2001.

(c) Until June 30, 2012, the reallocation of the amount in paragraph (b) of this section shall be based on each access element's projected revenue requirement divided by the total revenue requirement of all the access elements, provided that:

* * * * *

(d) Beginning July 1, 2012, the amount of the Transport Interconnection Charges to be reallocated to each category shall be equal to the amount of Transport Interconnection Charge costs the non-price cap local exchange carrier was projected to shift to each category in projecting its 2011 Interstate Switched Access Revenue Requirement.

* * * * *

[FR Doc. 2013–10562 Filed 5–3–13; 8:45 am]

BILLING CODE 6712–01–P

FEDERAL COMMUNICATIONS COMMISSION

47 CFR Part 54

[WC Docket Nos. 10–90, 05–337; DA 13–807]

Connect America Fund; High-Cost Universal Service Support

AGENCY: Federal Communications Commission.

ACTION: Final rule.

SUMMARY: In this document, the Federal Communications Commission (Commission) primarily addresses the model platform, which is the basic framework for the model consisting of key assumptions about the design of the network and network engineering. The Commission also addresses certain framework issues relating to inputs.

DATES: Effective June 5, 2013.

FOR FURTHER INFORMATION CONTACT: Katie King, Wireline Competition Bureau, (202) 418–7491 or TTY: (202) 418–0484.

SUPPLEMENTARY INFORMATION: This is a summary of the Commission's Report and Order in WC Docket Nos. 10–90, 05–337; DA 13–807, adopted on April 22, 2013 and released on April 22, 2013. The full text of this document is available for public inspection during regular business hours in the FCC Reference Center, Room CY–A257, 445 12th Street SW., Washington, DC 20554. Or at the following Internet address: *http://hraunfoss.fcc.gov/edocs_public/attachmatch/DA-13-807A1.pdf.*

I. Introduction

1. In the *USF/ICC Transformation Order,* 76 FR 73830, November 29, 2011, the Commission comprehensively reformed and modernized the universal service and intercarrier compensation systems to maintain voice service and extend broadband-capable infrastructure. As part of the reform, the Commission adopted a framework for providing support to areas served by price cap carriers known as Phase II of the Connect America Fund. An estimated eighty-five percent of the approximately 6.3 million locations in the nation that lack access today to terrestrial fixed broadband at or above the Commission's broadband speed benchmark live in areas served by price cap carriers. The Connect America Fund will maintain voice service and expand broadband availability to millions of unserved Americans living in these areas within the next five years, and aims to close this gap entirely within a decade. Through Phase II, the

Commission introduced targeted, efficient support for broadband-capable networks in these unserved rural areas as part of its efforts to close the rural-rural divide and direct funding to parts of rural America where it is most needed. Specifically, the Commission will provide support through ''a combination of competitive bidding and a new forward-looking model of the cost of constructing modern multi-purpose networks.'' Using the cost model to ''estimate the support necessary to serve areas where costs are above a specified benchmark, but below a second 'extremely high-cost' benchmark,'' the Commission will offer each price cap local exchange carrier (LEC) ''a model-derived support amount [for a period of five years] in exchange for a commitment to serve all locations in its service territory in a state that, based on the model, fall within the high-cost range and are not served by an competing, unsubsidized provider.''

2. The Commission delegated to the Wireline Competition Bureau (Bureau) ''the task of selecting a specific engineering cost model and associated inputs that meet the criteria specified'' by the Commission. Consistent with the approach taken by the Commission when it implemented a forward-looking model known as the High-Cost Proxy Model (HCPM) to determine support amounts for non-rural carriers in the wake of the implementation of the Telecommunications Act of 1996, the Bureau's plan is to adopt a model to estimate forward-looking costs in two separate orders. In this first order, we primarily address the model platform, which is the basic framework for the model consisting of key assumptions about the design of the network and network engineering. We also address certain framework issues relating to inputs.

II. Discussion

3. This order focuses on the platform components of the cost-to-serve module. As detailed below, and consistent with the approach previously taken by the Commission in adopting its prior forward-looking model for universal service support, we adopt a model platform that will allow the Bureau to estimate the full average monthly cost of operating and maintaining an efficient, modern network. Specifically, the model will begin by estimating all capital and operating expenses associated with a modern network. Those variously-timed expenditures will be converted to an average monthly cost, as described below. Because providers' support will be based on this average cost for five years, while many components of an actual network have much longer lives, using this average cost approach will not compensate providers for the full cost of a network within the five year Phase II timeframe. It will, however, estimate the cost of providing service in the way that best approximates the discipline of a competitive market.

4. The average costs will be based on an efficient modern network, rather than a less efficient legacy network supplemented with incremental upgrades over time. That is, consistent with the Commission's directive to adopt a ''forward-looking'' approach, we will model the costs as if all providers were able to claim the efficiency advantages of a modern green-field build, rather than attempt to model costs of upgrades and inefficiencies associated with maintaining and upgrading legacy networks piecemeal (a ''brown-field'' approach). Although some commenters have argued that a ''brown-field'' approach would result in lower modeled costs, we find that this is only because the various brown-field estimates in the record have each improperly excluded certain costs.

5. Following the assumption of a maximally efficient modern network, modeled costs will be based on an IP-based FTTP network of a wireline telecommunications provider, capable of providing both voice and broadband. Customer locations, both residential and business, will be placed in individual census blocks, and a network topology will be constructed to serve all of those locations. Consistent with the Commission's approach when it developed the HCPM in the 1990s, the model will calculate necessary interoffice transport (i.e., middle mile), which, in a modern network, would connect all central offices with internet gateways. The model will provide the capability to vary certain input values relating to the cost of construction based on physical geography within a given state. Costs will be calculated on a census block level.

6. Although a large number of important decisions regarding input values and other issues remain, preliminary estimates based on the current version of the CAM suggest that this better calibrated approach results in more reliable cost estimates of an efficient provider. Using the platform decisions adopted in this Report and Order, we estimate that per-location costs for the highest cost areas (those potentially available for Phase II funding) are roughly 20–25 percent lower in the current version of the CAM than in the cost model submitted by the ABC Coalition prior to the Commission's adoption of the *USF/ICC Transformation Order.* The work done to date thus has modified aspects of the CQBAT model that led to an overstatement of the costs of providing broadband-capable infrastructure in Phase II areas.

A. Threshold Model Design/Platform Issues

1. General Approach to Cost Estimation

7. Consistent with Commission precedent, the model platform that we adopt today will calculate a levelized cost that represents an estimate of the average monthly forward-looking cost of an efficient provider. Those costs include both capital and operating expenses. Recovery for each asset class, for example, poles, conduit, etc., will be spread out evenly over the useful life of the asset class according to empirical estimates of the rate at which elements of the asset class are retired. Costs will be levelized to produce a constant monthly cost throughout the life of each asset, which in many cases may exceed 20 years or more. Because a significant driver of network costs are assets with an accounting lifetime of 20 years or more, such as loop plant, the levelized cost calculated by the model will provide recovery for only a portion of the cost of the network over the five-year term of Phase II. In other words, as discussed more fully below, the model platform will calculate costs assuming that the supported network will retain significant value at the end of the five-year term of Phase II support.

2. Network Design

8. In the *USF/ICC Transformation Order,* the Commission delegated to the Bureau the authority to select the specific engineering cost model, including the modeled network architecture. The Commission indicated that the Bureau's ''ultimate choice of a greenfield or brownfield model, the modeled architecture, and the costs and inputs of that model should ensure that the public interest obligations are achieved as cost-effectively as possible.''

9. In the *Model Design PN,* 77 FR 38804, June 29, 2012, the Bureau sought comment on, among other things, the choice of a green-field or brown-field model; whether the model should estimate the costs of FTTP or Digital Subscriber Line (DSL) (including Fiber-to-the-Node (FTTN)) technology; and what terminal value to assign to the modeled network (e.g., book value or zero value). The Bureau also sought comment on whether the model should estimate the total costs of serving the entire service area so that shared costs

may be distributed between areas that are eligible and ineligible for support, or estimate only the standalone costs of areas eligible for support; how shared network costs should be distributed to the census-block (or smaller) area; and whether the model should calculate support for areas to which broadband has already been deployed or only for unserved areas.

10. As discussed below, we conclude that the Connect America Cost Model will be a green-field FTTP model with the terminal value of the network at the end of the five-year term determined by the book value of the assets. As explained in the *Model Design PN,* the issues of network technology (e.g., FTTP or DSL), design (green-field or brown-field) and terminal value (e.g., book value or zero value) are interrelated. We conclude that using a green-field FTTP model paired with book value is the best choice for estimating the most efficient forward-looking cost of providing service over a voice and broadband-capable wireline network in price cap areas.

a. Green-field vs. Brown-field

11. We find that using a green-field model is more appropriate than using a brown-field model, for three principle reasons. First, a green-field model is consistent with Commission precedent, including the *USF/ICC Transformation Order*. Second, a green-field model provides an estimate of costs that creates appropriate incentives to invest—that is, it best approximates the discipline provided by a competitive market. And finally, a green-field model can be implemented in a straightforward and timely manner. Contrary to some commenters' assertions, we conclude that a green-field model does not over-compensate providers. Indeed, a levelized green-field approach is likely to result in no more support than a properly calculated levelized brown-field approach because it approximates the average long-run cost of an efficient modern network optimized for voice and broadband, rather than the average long-run cost of a less efficient legacy voice network plus broadband upgrades.

12. First, a green-field approach is consistent with Commission's determination in the *USF/ICC Transformation Order* in that it would use a *forward-looking* cost model to identify price cap areas eligible for Connect America Phase II support, as well as other Commission precedent. A green-field approach is forward-looking because it estimates the cost of the ongoing provision of specific services by developing a hypothetical efficient, modern network to calculate the minimum cost of providing such services now and in the future, given current technology and input costs. It does not take into account historic costs or whether the carrier historically recovered its earlier investments in the existing network, other than what is provided through the monthly levelized cost stream going forward.

13. A green-field model is consistent with the approach taken by the Commission in developing and adopting its previous voice cost model, the HCPM. Even though legacy voice networks existed throughout the nation at that time, often including less-efficient older technologies or inefficient network routing, the Commission concluded that the appropriate way to determine support was to estimate the cost of an efficient modern network to provide voice service, assuming only the existence of incumbent central offices and current wire centers (referred to as the ''scorched node'' approach). Consistent with this longstanding precedent, the green-field approach we adopt will calculate (1) the minimum, levelized cost of a voice and broadband-capable network today, using current, rather than historic, technologies and prices, and (2) the minimum costs of continued provision of voice and broadband services on that network, including the costs of maintaining the network's capabilities in each year going forward.

14. Second, consistent with longstanding Commission precedent, we adopt a green-field approach because it estimates costs in a manner that provides appropriate forward-looking incentives to invest. A forward-looking approach to cost modeling does not ask whether or to what extent carriers' have recovered their costs from past investments. Instead, a forward-looking model calculates costs at a level expected to recover all network costs over the long term, accounting for investment risk and anticipated demand, comparable to a market with sustainable competition. In such a regulatory environment, recipients of support should receive appropriate forward-looking compensation for risks that are intended to mimic the risks that competitive firms face in markets where subsidies are not provided.

15. We are not persuaded by the argument that using a green-field model for Connect America Phase II will over-compensate the price cap carriers over a five-year period because the actual replacement costs incurred over the next five years may in some instances be less than the green-field levelized cost. The Commission previously has concluded that forward-looking economic costs—not actual costs—are the proper framework for determining universal service support, and the Commission specifically directed the Bureau to use a forward-looking approach in the *USF/ICC Transformation Order*. Moreover, whether an individual price cap carrier would actually spend more or less than model-determined support over the course of the five-year term will depend on where the individual price cap carriers that make a state-level commitment are in their respective investment cycles. Carriers have made and must continue to make investments that last substantially longer than five years, incurring costs that do not, year-by-year, match their revenues (even for the case of commercially-viable investments). Those carriers that must undertake a relatively high level of asset replacement may therefore face higher costs than the modeled costs. Others will face lower costs. Allowing monthly recovery of the model's levelized cost means, on average, all carriers will earn an amount that would allow them to maintain the specified levels of service going forward over the longer term.

16. Indeed, a green-field model may calculate costs lower than actual costs because it may overstate the degree to which carriers are able, in practice, to optimize their network. Carriers do not have the luxury of building their networks from the ground up to meet today's demand. Rather, they augment their networks piecemeal, with each upgrade subject to past investment decisions that may not always have been based on accurate forecasts of demand and technology developments. Consistent with Commission precedent in adopting a green-field model to estimate the forward-looking cost of voice service, we find that, on balance, the green-field approach should provide a reasonable overall approximation of costs for Phase II implementation.

17. Third, a forward-looking green-field approach can be implemented in a straightforward and timely manner, allowing the fastest possible deployment of new broadband in price cap territories. Each version of the CAM released to date contains the capability to estimate the costs of a green-field FTTP network. Moreover, the ABC Coalition previously submitted into the record of this proceeding more than a year ago a green-field model. As a result, the public and Bureau staff have had ample opportunity to analyze the attributes and the usefulness of a green-field model for implementing the Commission's universal service policies. These submissions build on a substantial history of use of green-field

models in a variety of regulatory contexts. In contrast, as discussed in more detail below, we are not satisfied that any version of the CAM has yet provided a reasonable way of estimating brown-field costs. We therefore conclude that adopting a green-field model platform now, so that parties can focus their attention on input values, will facilitate the timely conclusion of the Phase II cost model development process, and thereby accelerate the deployment of broadband-capable networks to unserved Americans.

18. In contrast to a green-field approach, there are significant drawbacks to a brown-field approach. First, notwithstanding arguments to the contrary, a brown-field approach is not entirely forward-looking. It represents a hybrid approach that falls between a true forward-looking approach, which a green-field model approximates, and a historic cost approach. A brown-field approach assumes existing infrastructure as of a point in time and adds the ongoing costs of this infrastructure to the cost of additional network upgrades necessary to provide a desired set of services in the future. As an example, existing fiber transport, and/or the last few thousand feet of copper terminating at an end-user location, could potentially be used to supply voice and broadband service. For these portions of the network, a brown-field approach would estimate costs based on the existing network facilities, rather than on a modern, efficient network.

19. Second, there would be serious practical hurdles to overcome before we could implement such an approach. The Bureau considered two possible ways to implement a brown-field approach: one that identifies those assets actually in place, and then considers the incremental cost of making that existing network broadband-capable, and another that produces a hypothetical model of a voice-only network, and then considers the incremental cost of adding broadband capability to that network. Both approaches raise significant practical difficulties.

20. The first approach to brown-field modeling has significant backward-looking elements not present in a green-field approach and is substantially more complicated than a green-field approach. In particular, this brown-field approach would require identification of the specific existing network assets that are assumed to be retained. Thus, we would need to develop a model that accurately represents the existing network infrastructure and determine what parts of the existing network can be used; we then would estimate the cost of any incremental upgrades required to meet the Commission's service obligations going forward, including the costs that would be necessary going forward to maintain the entire network's capabilities. In contrast to a green-field approach, this brown-field approach would require a substantial backward-looking exercise in which those components of the network that already exist must be identified and located, and characterized in terms of their age and capabilities going forward (e.g., gauge of copper wire, etc.). Additionally, this brown-field approach would model the forward-looking costs of augmenting the existing network to make it broadband-capable. In comparison to a green-field approach, such an exercise would likely require far more data, because existing network investments would need to be catalogued, and it would present a more complex cost optimization, because the optimal network would be designed to account for the elements of the existing network that would be efficient to keep. This would be particularly complex, requiring the Bureau to make decisions about what assets should be retained, and what should be replaced.

21. The second approach to brown-field modeling would be to estimate the green-field cost of the existing network and then estimate the incremental cost of making that network fully broadband-capable. This approach avoids the difficulties of cataloging existing network infrastructure, and of having to optimize taking historical investment decisions into account, but has the peculiarity of using a hypothetical optimized green-field cost model to estimate the cost of an existing network. While such an approach would limit the amount of data that would be required and would avoid some of the backward looking nature of the first approach, it only obliquely meets the ostensible objective of a brown-field approach, which is to assume that all existing infrastructure will be retained, with upgrades to make that network fully broadband-capable. In addition, taking this approach still would require the Bureau to make a substantial number of assumptions about the age and quality of existing assets and therefore significantly broaden the reasonable range of outcomes, compared to a green-field model. The Bureau first would have to determine which hypothetical assets are assumed to exist as the starting point, and then model the investments required to make that network capable of supplying broadband. In contrast, the green-field approach requires only modeling a current generation, modern network.

22. We are not persuaded by ACA's argument that a brown-field approach would result in cost estimates substantially lower than a green-field model, and therefore expand the number of unserved homes that could receive broadband given the fixed budget for Phase II. ACA's attempts to estimate brown-field costs exclude some costs that should be included in a proper brown-field model. In response to the *Model Design PN,* ACA argues that ''the CQBAT model [submitted by the ABC Coalition] includes functionality to allow for the modeling of a brownfield DSL build-out.'' In fact, that function in CQBAT simply eliminated all capital expenditures for certain network elements, such as copper loops. ACA acknowledged that CQBAT did not adequately account for the operating expenses associated with the copper portion of the loop, copper replacement in cases where plant needs to be replaced, and loop conditioning costs on a granular level, but argued that adding these functionalities to the model should not be difficult. Subsequently, in October 2012, ACA filed additional estimates of brown-field costs based on CQBAT runs under various scenarios, each of which excluded certain capital costs, such as copper loops, necessary for providing ongoing service from the calculations, and we find it would be appropriate to take these costs into account in a brown-field model. Therefore, we are not persuaded that the calculations provided by ACA appropriately reflect the cost estimates of a brown-field approach, and conclude that ACA does not provide a reliable estimate of the number of homes that would become served by broadband in Phase II.

23. While CAM version 3.0 contains a feature that attempts to approximate brown-field costs, we still do not believe this approach fully corrects the issues associated with the CQBAT model's brown-field approach. This ''brown-field adjustment'' was intended to capture the replacement cost of existing plant as those assets are retired, but not to capture the cost of existing plant that is continued to be used to provide the existing services. That is, the calculation captures the cost of providing service when an asset is retired, but not of providing service until that point. We therefore conclude that additional costs would have to be added to this brown-field adjustment to properly take into account the existing assets necessary to provide and maintain voice and broadband services on an ongoing basis. In fact, we now are convinced that if all

these costs are properly accounted for, brown-field modeling should provide cost estimates no lower than, or potentially higher than, a green-field approach.

24. In sum, we find that a green-field cost approach is the preferable approach to calculate the cost of a forward-looking network. It is more consistent with the Commission's directive and prior precedent, and we conclude that there are no persuasive arguments that using a green-field approach would result in overpayments to the price cap carriers. In contrast, development of a suitable brown-field model would likely take a considerable amount of additional time and delay in implementation of Connect America Phase II, because it is a much more complex undertaking with little precedent to guide staff efforts.

b. FTTP

25. We also conclude the best approach to meet the Commission's directive that we adopt a forward-looking cost model is to estimate the costs of a FTTP network rather than a twisted copper pair DSL network. As explained in the *Model Design PN,* a DSL network ''is only forward looking from the perspective of decisions made a decade or more in the past,'' and ''has higher expected operating expenses and is more likely to require significant additional investment to make faster broadband offerings available.'' Although some price cap carriers may choose to extend broadband to unserved areas in the near term by shortening copper loops, rather than deploying FTTP, the most efficient wireline technology being deployed today in new builds is FTTP. Network construction costs are essentially the same whether a carrier is deploying copper or fiber, but fiber networks result in significant savings in outside plant operating costs over time. If an efficient carrier were to design a new wireline network today, it would be an all Internet protocol (IP) fiber network, not a circuit switched copper network, because such a network would be cheaper and more scalable over time. Indeed, an IP fiber network would be the appropriate choice for a wireline network even if there were no service obligation to extend broadband. Therefore, FTTP is more consistent with a forward-looking approach.

c. Methodology for Determining Terminal Value

26. The model platform that we adopt today provides capital recovery through what is termed depreciation. We conclude that the model should determine the terminal value of the network based on ''book value'' calculated as the difference between investment and economic depreciation, which takes into account the economic life of the equipment and infrastructure. Specifically, the model will calculate book depreciation expense based on equal-life-group methodologies, using Gompertz-Makeham survivor (mortality) curves and projected economic lives. The model will adjust the survivor curves, however, so that the average lifetime of the asset falls within the range of expected accounting lifetimes authorized by the Commission. This approach is consistent with the methodology used in the Commission's previous cost model used to determine support amounts for the non-rural LECs, HCPM, and supported in the current record.

27. In the virtual workshop, the Bureau sought comment on whether any of the projected lives used in HCPM are outdated and should be modified. The ABC Coalition recommended that the Bureau uses the same economic lives for assets as HCPM, while ACS suggested the Commission's economic lives are too long and should be updated. Based on our review of the record, we now conclude the model will utilize the same economic lives for assets as specified by the Commission previously when it adopted the HCPM, when determining the monthly cost of capital investments. As the ABC Coalition notes, for more than a decade, these economic lives for assets have been widely used in cost models in state regulatory proceedings. We are persuaded that it would be administratively burdensome to establish new values, which would unnecessarily delay implementation of Connect America Phase II. We recognize that to the extent economic lives are overstated for particular assets that would result in a systematic understatement of costs, but no party has submitted any evidence in the record demonstrating that this effect would result in a material change in support levels thwarting achievement of the Commission's universal service objectives.

28. As the Bureau explained in the *Model Design PN,* the annual cost and support values are highly dependent on the terminal value, because the five-year support period is much shorter than the average lifetime of all of the asset classes in the model. At the end of five years, a FTTP network would have significant commercial value. Because estimating commercial value at the end of the five-year term would require making a number of assumptions about the evolution of technology and the marketplace, we conclude that using book value is the best approach. Using a terminal value of zero, as some parties advocate, would permit carriers to recover the entire cost of the network over five years, and assume the network had no future commercial value. We find that to be an unreasonable assumption and would over-compensate carriers, so we decline to use a zero terminal value in CAM.

3. Assigning Shared Network Costs

29. The Commission concluded in the *USF/ICC Transformation Order* that it would use a forward-looking model capable of determining ''on a census block or smaller basis, areas that will be eligible for CAF Phase II support.'' As a threshold matter, we conclude that the model will calculate costs at the census block level, except in those instances where a census block is split between two service providers. The model will calculate costs at a significantly more granular level than the Commission's prior forward-looking model, HCPM, which calculated costs at the wire center level. There are approximately 11 million census blocks, compared to approximately 20,000 wire centers. We therefore conclude that calculating costs at the census block level will be sufficient to meet the Commission's objective of targeting support to high cost areas.

30. The Commission also concluded that ''it would be appropriate to exclude any area served by an unsubsidized competitor'' that meets the Commission's initial performance requirements. Most costs in a network are shared costs. As a result, the method used to attribute the costs of shared plant to eligible and ineligible areas and among census block or smaller areas will have a significant effect on the relative cost of serving different areas.

31. In the *Model Design PN,* the Bureau asked how shared network costs should be assigned between eligible and ineligible areas. Specifically, the Bureau asked whether costs should be modeled for the entire service areas and then allocated between eligible and ineligible areas or costs should be estimated only for the eligible areas on a standalone basis.

32. We conclude that the Connect America Cost Model will model the total cost of serving an entire service territory within a state, rather than calculating the standalone costs of serving only eligible census blocks, and then, as more fully discussed below, allocate the shared costs between eligible and ineligible census blocks. Modeling the costs associated with a complete network (i.e., including both

eligible and ineligible census blocks) and then assigning shared costs between the eligible and ineligible census blocks has significant benefits. First, it more accurately depicts an economically efficient network and provider. An economically efficient network would cover all or most locations in a given service territory, rather than only serving a small subset of locations that lack broadband. Indeed, building a network to only serve those locations that lack broadband would likely result in higher cost estimates for those areas than otherwise would be the case, because the service provider would have to deploy less than optimal routing to reach those pockets of customers that are in eligible census blocks. Moreover, an economically efficient provider would not generally cede a large fraction of customers within its service territory to unsubsidized competitors; rather, it would seek to compete in those areas where a positive business case exists. Modeling the entire network and then making adjustments to determine support for particular census blocks where there is no unsubsidized competitor is a reasonable way to proceed. Finally, the Bureau notes that this approach has broad support in the record. For these reasons, the Bureau finds that it is appropriate for the Connect America Cost Model to model the total cost of serving the entire state, not the standalone costs of only serving eligible census blocks, and then allocate shared costs between eligible and ineligible census blocks.

33. In the *Model Design PN,* the Bureau also asked how to allocate shared costs consistent with the requirement in the *USF/ICC Transformation Order* that the model be capable of determining ''on a census block or smaller basis, areas that will be eligible for CAF Phase II support.'' Shared costs need to be allocated not only between eligible and ineligible areas, but among census blocks in eligible areas so that the costs of serving each individual census block can be estimated. The Bureau sought comment on two potential options: (1) A subtractive method, in which the model would estimate only those costs to serve eligible areas that are over and above the costs of serving the ineligible areas, and (2) a pro rata method, in which costs would be assigned to eligible and ineligible areas on some pro rata basis or using some other formula. The Bureau indicated a general preference for the subtractive method, but acknowledged that the computational complexity of the subtractive method might make it difficult or impossible to implement in practice. Subsequently, as part of the virtual workshop, the Bureau sought comment on a possible approach to the subtractive method.

34. Based on our review of the record and our development of CAM to date, we now conclude that the model will use a pro rata method for assigning shared costs. The Bureau gave significant consideration to a subtractive approach for assigning costs, and there was support in the record for such an approach. Ultimately, however, we find that the computational complexity and the novelty of the subtractive approach renders it too difficult to implement. The cost-causation approach contained in the current version of CAM (CAM version 3.0) provides a practical method of assigning shared costs in a reasonable manner. Specifically, the model will use a ''cost causation'' method that assigns a fraction of the costs associated with a shared network facility according to the relative number of customers in each area using the facility. Using cost causation to allocate costs is consistent with the current High-Cost Proxy Model, the model submitted by the ABC Coalition and the National Broadband Plan modeling. For that reason, the Bureau concludes that the cost-causation approach for sharing costs between eligible and ineligible census blocks is appropriate for use in the Connect America Cost Model.

4. Calculation of Costs for Price Cap Carriers' Currently Served Locations

35. We conclude the model platform will estimate the costs of serving locations irrespective of whether they are currently provided broadband by the ILEC. We find that this approach is consistent with the Commission's goals and directives in the *USF/ICC Transformation Order.* While the Commission sought to ''extend[] broadband to millions of unserved locations,'' it also recognized the importance of ''sustaining existing voice and broadband services.'' We therefore reject the Joint Michigan Competitors' claim that the model should exclude broadband-served areas because the Commission's focus is on deploying broadband to unserved areas, and ACA's claim that broadband-served areas should only receive ongoing support for maintenance and operational expenses—not for capital expenses.

36. We will presume, consistent with the Commission's direction and predictive judgment, that locations that exceed a specified cost benchmark, which will be determined in a future order, will require support on an ongoing basis based on the total levelized cost of sustaining existing voice and broadband services at reasonable end-user rates. As we noted in the *Model Design PN,* carriers may have deployed broadband in certain areas based on past universal service support and intercarrier compensation revenues. Even where carriers may have deployed broadband to fulfill merger commitments, because they received another source of funding, or for other reasons, such carriers still may require funding to sustain the previous broadband deployment. And as we explained above, providing support for only maintenance and operational expenses would not cover the entire cost of sustaining service.

37. Moreover, treating locations currently served by the incumbent differently from completely unserved locations is inconsistent with a using a green-field approach to estimate the costs of an efficient modern network optimized for voice and broadband. Treating served and unserved locations differently would require modeling actual historical network deployment, rather than an efficient forward-looking network. This is functionally similar to the first approach to brown-field modeling, which would require an extensive data collection, while unnecessarily delaying implementation of Phase II.

38. Accordingly, we reject commenters' claims that areas already served by broadband do not require ongoing support, (or only require limited ongoing support), and we conclude that the model will include and calculate ongoing support for high-cost locations above the cost benchmark that are both served and unserved by broadband. We note that this is consistent with the Commission's approach when it adopted HCPM; it calculated the cost of an efficient provider to provide voice service throughout the territory of a non-rural LEC, even though those LECs already provided voice.

5. Treatment of Non-Contiguous United States

39. The Commission has ''direct[ed] the [Bureau] to consider the unique circumstances of [Alaska, Hawaii, Puerto Rico, the U.S. Virgin Islands and Northern Marianas Islands] when adopting a cost model.'' The Commission further directed the Bureau to determine whether the cost model provides sufficient support to these areas, and if, in the Bureau's determination, the model does not provide these areas with sufficient support, the Commission granted the Bureau the discretion to ''maintain existing support levels, as modified in

this Order, to any affected price cap carrier, without exceeding the overall budget of $1.8 billion per year for price cap areas.'' The Bureau has sought comment to further develop the record on these two options for areas outside the contiguous United States, and the associated service obligations.

40. The decisions we make herein do not prejudge whether modifications to the model platform or input values should be made with respect to the non-contiguous United States, or support levels for those areas should be frozen. We will address those arguments at a future date.

B. Customer Locations and Outside Plant Design

41. As the Commission recognized when it adopted the model platform for HCPM, outside plant—namely, the loop facilities between switches and the customer premises—constitutes the largest portion of total network investment, and the design of outside plant facilities depends heavily on the location of customers. Business customer information is important not only for locating business customers, but also for scaling the network infrastructure to ensure that the costs of shared resources are appropriately shared among all users. The placement of customer locations thus is an important element of the CAM platform.

1. Customer Locations

42. In the *Model Design PN,* the Bureau proposed to use a commercial data set for residential customer location data, but also sought comment on two alternatives: Using official government census data, which would provide the number of housing units in a census block but no geocodes, and collecting actual customer location data from providers. For business locations, the Bureau proposed using government data from the U.S. Bureau of Labor Statistics (BLS) Economic Census, but also sought comment on using commercial data sources. The Bureau sought further comment via the CAM virtual workshop on methods for determining customer locations.

43. Few commenters offered any comments about customer locations data. In the absence of actual geocode information, the ABC Coalition supports using a methodology that uses a combination of data sources to estimate the number of customer locations by zip code and then distribute those locations randomly along roads in the census block. The only commenter suggesting an alternative source for customer location data is the National Association of State Utility Consumer Advocates (NASUCA), which proposed the Commission obtain E911 databases and translate the addresses into geocodes that can be used in the cost model. If the Commission uses census data, NASUCA argues that these data should be augmented by geocoded data provided by the carriers in census blocks above a certain size.

44. We adopt a model platform that will use a combination of commercial data set (GeoResults Q3 2012) and census data to determine residential and business locations. Specifically, the model will use GeoResults Q3 2012, which provides an address-based residential data set of households. To the extent there are discrepancies between the location counts from GeoResults and 2011 census housing unit estimates, the GeoResults count will be adjusted upward or downward to conform to the census, with the records for the requisite number of locations to be added or subtracted selected in a random manner. We conclude the model also should use GeoReults for business location data, because those data are more current and include more businesses than the BLS economic census data. GeoResults also provides a national building file, which is used to identify buildings that have both residential and business customers. The model will use additional data sources to identify the locations of community anchor institutions and cell towers.

45. The CAM will use geocoded locations wherever possible, and place locations that cannot be geocoded randomly along the roads within the census block. This is an improvement upon the approach previously taken by the Commission when it implemented HCPM. By using geocoded data where available, the model will estimate with greater precision the amount of feeder plant necessary to reach all locations, which should result in more accurate cost estimates than the prior forward-looking cost model utilized by the Commission, which assigned all locations randomly along roads using Topologically Integrated Geographic Encoding and Referencing (TIGER) data.

46. We find that using these data is preferable to using E911 data, supplemented by carrier-provided data, as suggested by NASUCA. First, NASUCA does not specifically identify the E911 database(s) that it contends should be used. Moreover, an approach based on E911 databases would potentially introduce inconsistencies in the model across states, because each state and, in many instances depending on state and local regulations, individual Public Safety Answering Points (PSAPs), are responsible for their E911 databases, and these databases differ in methodology, completeness and accuracy. Using a consistent methodology throughout the nation will lessen the likelihood of inconsistencies in cost estimates among states, which could skew the relative distribution of support in unknown ways among the states.

47. We conclude that it is not feasible to develop a model platform that incorporates actual customer locations for all locations. There is no publicly available source of nationwide geocoded location data, and commercial data sources do not provide geocodes for all locations. Even if the price cap carriers provided the Commission with their geo-coded customer database, or address list if they do not have geo-coded customer locations, these data bases would only include the incumbent local exchange carriers' customers and not all the housing units in the census block. Doing a mandatory data collection that collected customer location information from cable operators and other non-incumbent providers would be a significant Commission undertaking, and it would impose burdens on those providers. Nothing in the record before us suggests that the incremental improvement in precision of locations that would result from such a mandatory data collection would be worth the costs in terms of burden on both the Commission and outside parties. Accordingly, we conclude that GeoResults, trued-up with Census data for residential locations, is the best source of customer locations because of the number of locations that are geocoded. The final model will use the methodology in CAM version 3.0 for assigning included locations that cannot be geocoded along road segments.

2. Clustering

48. We adopt a clustering approach that uses road-based routing to determine the maximum size of the clusters. Once customer locations have been identified, the model must determine how to group and serve those customers in an efficient and technologically reasonable manner. Consistent with past Commission precedent for forward-looking cost models, the objective is to group customers into serving areas in an efficient manner to minimize costs, while maintaining a specified level of network performance equality. Like HCPM, our model platform will design clusters consistent with engineering constraints, grouping customers so that they are no further away than allowed by network design to deliver services

meeting the Commission's performance requirements. CAM will improve the approach previously used by the Commission in HCPM, however, as it will use road-based routing to determine the maximum size of the clusters. Thus, clusters defined by CAM are likely smaller, but more realistic estimates of cluster size, resulting in more accurate cost estimates. By using road segments in clustering, the CAM model avoids the problem of having the length of some loops modeled along roads exceed the maximum loop length necessary to provide service meeting specified standards. The ABC Coalition supported this approach, and no party objects to using this clustering methodology for modeling costs in the contiguous United States. We conclude that the model will include the clustering methodology currently incorporated into CAM version 3.0.

3. Routing

49. We adopt the routing methodology used in CAM, which builds plant along roads and uses a minimum spanning tree algorithm. Although HCPM allowed for minimum spanning-tree optimization of routes, it did not use the road network. CAM, on the other hand, represents an enhancement to the approach taken by the Commission in developing a forward-looking model in the 1990's, as it lays loop plant along actual road segments and utilizes a spanning tree algorithm to find the lowest cost route to serve all customer locations along road paths. The ABC Coalition supported this approach, and no party objects to using this routing methodology for modeling costs in the contiguous United States. We conclude that the model platform will include the CAM version 3.0 algorithm for routing loop plant and feeder network.

4. Sizing Network Facilities

50. We adopt a model platform that will size network facilities such that there is sufficient capacity at the time of peak usage. The model platform accomplishes this by ensuring that the size of each link in the network is sufficient to support peak usage busy hour offered load, taking into account subscriber usage capacity (GB/month/subscriber) as well as throughput (Mbps) and take-rate. This method is basically the same approach that was taken in the National Broadband Plan modeling. Because voice is the supported service, the model also takes into account peak demands associated with voice service in the sizing calculations. No party objects to this general approach to network sizing. The ABC Coalition agrees that sizing broadband facilities based on throughput required at the time of peak usage is reasonable, while noting that the peak demands associated with voice service should be included in the sizing calculations if voice capability is to be added to the model. We will address the specific input values the model will use for busy hour under load in a future order.

C. Switching and Interoffice Facilities

1. Voice Capability

51. In the *USF/ICC Transformation Order,* the Commission determined that ''voice telephony service'' is the service supported by federal high-cost universal support. All recipients must offer voice telephony service. In addition, as a condition of receiving support, all recipients must offer broadband service.

52. We adopt a model platform that estimates the cost of an IP-enabled network capable of providing voice service. The cost is modeled on a per-subscriber basis and takes into account the cost of hardware, software, services, and customer premises equipment to provide carrier-grade Voice over Internet Protocol (VoIP) service. No party objects to this general methodology for including voice capability to serve the contiguous United States, and the ABC Coalition supports this approach. We conclude that the appropriate forward-looking way to model a network today that provides voice service is to design an all-IP network. The specific inputs used to calculate the per-subscriber cost will be addressed in a future order.

2. Interoffice Facilities

53. We adopt a model platform that ties central offices to the nearest tandem location, ties tandems together, and uses efficient routing paths for all connections, using information from the Local Exchange Routing Guide database. The model platform assumes Ethernet-based fiber connections among wire centers and between wire centers and tandem switches, including the use of wave division multiplexing gateways. Additionally, the model platform connects each hierarchy to the nearest (lowest cost) Internet access point regardless of ownership. The model platform also uses routing along roads to determine the cost of deploying fiber to make connections, and includes Broadband Remote Access Services and/or gateway costs. No party objects to this general approach for the contiguous United States, and the ABC Coalition supports this approach. This is consistent with the HCPM, which also included the middle mile costs of providing service. We will address cost inputs related to interoffice transport in a future order.

D. Framework for Capturing Variations in Cost

54. As discussed more fully below, the CAM will utilize differing assumptions for certain input values based on three geographic density zones, and will adjust certain input values for labor and materials based on the three-digit zip code.

1. Plant Mix Based on Density Zone

55. The cost of a modern broadband network varies significantly based on the type of infrastructure used to deploy the wires—specifically whether the wires are underground, buried or aerial. Most networks rely on all three types of plant in varying degrees, with the precise mix of plant dependent on many factors. A model used to estimate the costs of deploying a network must therefore make assumptions regarding the mix of plant used in the network.

56. We adopt a model that assumes that each state is made up of three density zones—urban, suburban, and rural. For each density zone, the model will assume a specific plant mix for each of three different parts of the network—distribution, feeder, and inter-office transport. As a result, each state will have a matrix of nine different density zone/network component combinations, each of which has its own mix of underground, buried, and aerial plant. In addition, the model will include a nationwide set of plant mixes for each density zone and network component, which may be used in any state for which specific inputs may not be available.

57. The Bureau concludes that this methodology will provide sufficiently granular variation in the mix of plant in the entire network. We recognize that the HCPM varied cost by nine density zones, but no party in the current proceeding objects to using three geographic zones. The ABC Coalition notes there was no variation in the plant mix between the least dense zones in HCPM, which together correspond to the rural zone in the model we are evaluating.

58. No commenter objected to the general principle that plant mix should vary according to density zones, with different plant mix values in different areas. Rather, the parties that addressed this issue argued there should be a process to document the development of the specific input values to be used. The source and specific percentages of plant mix to be used in the matrix will be

determined in a future order addressing inputs.

2. Material and Labor Cost Adjustments Based on Location

59. We adopt an approach that utilizes uniform input values for various capital costs, with adjustments for regional variations in labor and material costs. We conclude that this approach to development of a forward-looking model is consistent with past precedent. In the *HCPM Inputs Order,* 64 FR 67372, December 1, 1999, the Commission determined nationwide default values are generally more appropriate than company-specific input values for a forward-looking model. It noted that the universal service support mechanism is ''based on the estimated costs that an efficient carrier would incur to provide the supported services, rather than on the specific carrier's book costs.'' It concluded that ''it would be administratively unworkable to use company-specific values in the federal nationwide model.'' At the same time, however, the Commission recognized the desirability of having data that accurately and objectively reflect ''variations in forward-looking costs based on objective criteria,'' and it stated that it was open to additional modifications of inputs in the future. Thus, although the Commission did not adjust costs for regional variation in adopting HCPM, it expressly recognized that a forward-looking model could appropriately recognize variations in cost.

60. Our forward-looking model will use regional cost adjustment factors to capture variation in labor and materials costs by three-digit ZIP codes. Those regional adjustments are based on data obtained from a national survey of the costs of construction in various areas of the United States by R.S. Means. The ABC Coalition supports this approach of using nationwide average values with regional adjustments, noting that the R.S. Means data is widely recognized and used in numerous contexts. No party objected to the use of this methodology for areas in the contiguous United States.

III. Procedural Matters

A. Paperwork Reduction Act

61. This document does not contain new or modified information collection requirements subject to the Paperwork Reduction Act of 1995 (PRA), Public Law 104–13. In addition, therefore, it does not contain any new or modified information collection burden for small business concerns with fewer than 25 employees, pursuant to the Small Business Paperwork Relief Act of 2002, Public Law 107–198.

B. Final Regulatory Flexibility Act Certification

62. The Regulatory Flexibility Act of 1980, as amended (RFA), requires that a regulatory flexibility analysis be prepared for rulemaking proceedings, unless the agency certifies that ''the rule will not have a significant economic impact on a substantial number of small entities.'' The RFA generally defines ''small entity'' as having the same meaning as the terms ''small business,'' ''small organization,'' and ''small governmental jurisdiction.'' In addition, the term ''small business'' has the same meaning as the term ''small business concern'' under the Small Business Act. A small business concern is one which: (1) Is independently owned and operated; (2) is not dominant in its field of operation; and (3) satisfies any additional criteria established by the Small Business Administration (SBA).

63. In this Report and Order, we adopt a model platform for the Connect America Phase II cost model that will calculate a levelized cost that represents an estimate of the average monthly forward-looking cost of an efficient provider. A model platform is the basic framework for the model consisting of key assumptions about the design of the network and network engineering. We also address certain framework issues relating to inputs for the model. These decisions are not anticipated to have a significant economic impact on small entities, insofar as the model produces high-cost support amounts for price cap carriers and their affiliates that accept the right of first refusal pursuant to Connect America Phase II. This is primarily because most (and perhaps all) of the affected carriers are not small entities. Moreover, the decisions made about the model platform in this Report and Order are not anticipated to systematically increase or decrease support for any particular group of entities as compared to possible alternatives discussed in the record. Therefore, we certify that the decisions made in this Report and Order will not have a significant economic impact on a substantial number of small entities. The Commission will send a copy of the Report and Order, including a copy of this final certification, in a report to Congress pursuant to the SBREFA. In addition, the Report and Order and this certification will be sent to the Chief Counsel for Advocacy of the SBA, and will be published in the **Federal Register**.

C. Congressional Review Act

64. The Commission will send a copy of this Report and Order to Congress and the Government Accountability Office pursuant to the Congressional Review Act.

IV. Ordering Clauses

65. Accordingly, *it is ordered,* pursuant to the authority contained in sections 1, 2, 4(i), 5, 214, 254, 303(r), and 403 of the Communications Act of 1934, as amended, and section 706 of the Telecommunications Act of 1996, 47 U.S.C. 151, 152, 154(i), 155, 214, 254, 303(r), 403, and 1302, sections 0.91, 0.201(d), 1.1, and 1.427 of the Commission's rules, 47 CFR 0.91, 0.201(d), 1.1, 1.427, and the delegations of authority in paragraphs 157, 184, 186, 187, and 192 of the *USF/ICC Transformation Order,* FCC 11–161, that this Report and Order *is adopted,* effective thirty (30) days after publication of the text or summary thereof in the **Federal Register**.

Federal Communications Commission.

Carol E. Mattey,

Deputy Chief, Wireline Competition Bureau.

[FR Doc. 2013–10565 Filed 5–3–13; 8:45 am]

BILLING CODE 6712–01–P

DEPARTMENT OF COMMERCE

National Oceanic and Atmospheric Administration

50 CFR Part 660

[Docket No. 120814338–2711–02]

RIN 0648–BD14

Magnuson-Stevens Act Provisions; Fisheries Off West Coast States; Biennial Specifications and Management Measures; Inseason Adjustments

AGENCY: National Marine Fisheries Service (NMFS), National Oceanic and Atmospheric Administration (NOAA), Commerce.

ACTION: Final rule; inseason adjustments to biennial groundfish management measures.

SUMMARY: This final rule announces inseason changes to management measures in the Pacific Coast groundfish fisheries. This action, which is authorized by the Pacific Coast Groundfish Fishery Management Plan (PCGFMP), is intended to allow fisheries to access more abundant groundfish stocks while protecting overfished and depleted stocks.

DATES: Effective 0001 hours (local time) May 6, 2013.

FOR FURTHER INFORMATION CONTACT: Colby Brady (Northwest Region, NMFS), phone: 206–526–6117, fax: 206–526–6736, *colby.brady@noaa.gov.*

SUPPLEMENTARY INFORMATION:

Electronic Access

This final rule is accessible via the Internet at the Office of the Federal Register's Web site at *http://www.gpo.gov/fdsys/search/home.action.* Background information and documents are available at the Pacific Fishery Management Council's Web site at *http://www.pcouncil.org/.*

Background

The Pacific Coast Groundfish FMP and its implementing regulations at title 50 in the Code of Federal Regulations (CFR), part 660, subparts C through G, regulate fishing for over 90 species of groundfish off the coasts of Washington, Oregon, and California. Groundfish specifications and management measures are developed by the Pacific Fishery Management Council (Council), and are implemented by NMFS. The final rule to implement the 2013–14 harvest specifications and management measures for most species of the Pacific Coast Groundfish Fishery was published on January 3, 2013 (78 FR 580). The Council, in consultation with Pacific Coast Treaty Indian Tribes and the States of Washington, Oregon, and California, recommended changes to current groundfish management measures at its April 5–11, 2013 meeting. The Council recommended adjusting groundfish management measures, as described below, in order to respond to updated fishery information and additional inseason management needs. The adjustments to fishery management measures are not expected to result in greater impacts to overfished species than originally projected through the end of 2013. Estimated mortality of overfished and target species is the result of management measures designed to achieve, to the extent possible, but not exceed, annual catch limits (ACLs) of target species while fostering the rebuilding of overfished stocks by remaining within their rebuilding ACLs.

Washington State Recreational Management Measures

The Council recommended and NMFS is implementing the recreational measures contained in the Washington Department of Fish and Wildlife (WDFW) report for Marine Area 4 relative to cabezon and lingcod length limits and cabezon bag limits. Specifically, in the area between the U.S./Canada border and 48°10′ N. lat. (Cape Alava; Washington Marine Area 4) in order to: (1) Establish a minimum size of 18 inches for cabezon and reduce the daily bag limit from 2 per angler per day to 1 per angler per day; and, (2) reduce the minimum size for lingcod from 24 inches to 22 inches. These actions are necessary in order to reduce impacts to nearshore species with little available data, and to reduce potential impacts to overfished species such as yelloweye rockfish, including young of the year recruits. Additionally, Federal regulations that conform to state regulations provide consistency for stakeholders and strengthen the ability to enforce regulations pertaining to recreational groundfish fishing.

Limited Entry Fixed Gear Fishery Management Measures

The International Pacific Halibut Commission (IPHC) establishes total allowable catch (TAC) amounts for Pacific halibut each year in January. Under the authority of the Northern Pacific Halibut Act, and implementing regulations at 50 CFR 300.63, a catch sharing plan, developed by the Pacific Council and implemented by the Secretary, allocates portions of the annual TAC among fisheries off Washington, Oregon, and California. The catch sharing plan for Pacific halibut fisheries in Area 2A (waters off the U.S. West coast) allows an incidental total catch limit for halibut for the 2013 sablefish primary season (i.e. tier limit fishery) of 21,410 lb (9,711 kg). The retention limits for halibut were not revised as part of the 2013–2014 harvest specifications and management measures because the TAC of halibut for 2013 was not determined until the IPHC meeting in January, 2013. IPHC recommended coast-wide catch limits for 2013 totaling 31,028,000 lb (14,074,064 kg), which is a coast-wide decrease of 7.5 percent from the 2012 catch limit of 33,540,000 lb. (15,213,488 kg). However, the area 2A allocation increased 8 percent from 910,000 lb. (412,769 kg) in 2011 to 989,000 lb. (448,603 kg) for 2012, and increased 1 percent from 2012 to 990,000 lb. (9,711 kg) for 2013. Due to the increase in the Pacific halibut TAC for area 2A, and the resulting increase in the amount of Pacific halibut available to the sablefish primary fishery as incidental take, and taking into account the fact that the limited entry fixed gear sablefish fishery did not achieve its 2012 incidental halibut allocation in 2012, the Council considered options to revise the catch ratio established in the groundfish regulations at 50 CFR 660.231, starting at the March 2013 meeting. These options were developed to allow the fishery to achieve but not exceed the 2013 halibut allocation in order to keep halibut incidental halibut catch within the 2013 allocation of 21,410 lb (9,711 kg). The options the Council approved for public review were: (1) The status quo option of 50 lb (23 kg) dressed weight of halibut for every 1,000 pounds (454 kg) dressed weight of sablefish landed and up to 2 additional halibut in excess of the 50-pounds-per-1,000-pound ratio per landing; (2) 75 lb (34 kg) dressed weight of halibut for every 1,000 pounds (454 kg) dressed weight of sablefish landed and up to 2 additional halibut in excess of the 75-pounds-per-1,000-pound ratio per landing; and, (3) 100 lb (45 kg) dressed weight of halibut for every 1,000 pounds (454 kg) dressed weight of sablefish landed and up to 2 additional halibut in excess of the 100-pounds-per-1,000-pound ratio per landing.

The Council adopted their final recommendation for incidental retention limits for Pacific halibut in the sablefish primary fishery at its April meeting. The Council recommended and NMFS is implementing incidental halibut retention regulations at 50 CFR 660.231(b)(3)(iv) to read as follows: ''75 lb (34 kg) dressed weight of halibut for every 1,000 pounds (454 kg) dressed weight of sablefish landed and up to 2 additional halibut in excess of the 75-pounds-per-1,000-pound ratio per landing.''

NMFS is including provisions which specify that the landing requirement applies also to possession, and the term ''dressed'' is described to mean halibut landed eviscerated with their heads on.

Classification

This final rule makes routine inseason adjustments to groundfish fishery management measures based on the best available information and is consistent with the Pacific Coast Groundfish FMP and its implementing regulations.

This action is taken under the authority of 50 CFR 660.60(c) and the North Pacific Halibut Act (16 U.S.C. 773c), and is exempt from review under Executive Order 12866.

These inseason changes to Washington State recreational management measures, Limited Entry Fixed Gear Fishery Management Measures and halibut provisions are based on the most recent data available. The aggregate data upon which these actions are based are available for public inspection at the Office of the Administrator, Northwest Region, NMFS, during business hours.

For the following reasons, NMFS finds good cause to waive prior public notice and comment on the revisions to groundfish management measures under 5 U.S.C. 553(b) because notice and comment would be impracticable and contrary to the public interest. Also, for the same reasons, NMFS finds good cause to waive the 30-day delay in effectiveness pursuant to 5 U.S.C. 553(d)(3), so that this final rule may become effective by May 1, 2013, or as soon as possible thereafter upon publication in the **Federal Register**.

At the April Council meeting, the Council recommended that these changes, which are based on the most recent information available, be implemented by May 1, or as soon as possible thereafter. There was not sufficient time after that meeting to draft this document and undergo proposed and final rulemaking before these actions need to be in effect. For the actions to be implemented in this final rule, affording the time necessary for prior notice and opportunity for public comment would prevent NMFS from managing fisheries using the best available science to approach, without exceeding, the ACLs for federally managed species in accordance with the FMP and applicable law. The adjustments to management measures in this document affect recreational fisheries in Washington, as well as commercial fisheries in California, Oregon, and Washington. These adjustments to management measures must be implemented in a timely manner, as soon as possible, to allow the recreational fishery in Washington State to harvest available healthy stocks while staying within the ACLs for target and overfished species, and to allow commercial limited entry fixed gear fishermen north of Pt. Chehalis continued opportunities to harvest incidental halibut catch in the Non-treaty sablefish fishery. If this rule is not implemented immediately, the public could have incorrect information regarding allowed recreational fishery management measures in Washington State and allowed commercial limited entry fixed gear fishery incidental halibut trip limits while targeting sablefish north of Pt. Chehalis, which would cause confusion and be inconsistent with the Council's intent. It would be contrary to the public interest to delay implementation of these changes until after public notice and comment, because making this regulatory change as soon as possible allows harvest as intended by the Council in fisheries that are important to coastal communities in a manner that allows target species to be attained, while preventing ACLs of overfished and target species from being exceeded.

No aspect of this action is controversial and no change in operating practices in the fishery is required from those intended in this inseason adjustment.

Delaying these changes would also keep management measures in place that are not based on the best available information. Such delay would impair achievement of the Pacific Coast Groundfish FMP goals and objectives of preventing overfishing and rebuilding overfished stocks by managing for appropriate harvest levels, and adopting harvest specifications and management measures consistent with resource stewardship responsibilities for each groundfish species or species group.

Accordingly, for the reasons stated above, NMFS finds good cause to waive prior notice and comment and to waive the delay in effectiveness.

List of Subjects in 50 CFR Part 660

Fisheries, Fishing, Indian Fisheries.

Dated: May 1, 2013.

Kara Meckley,

Acting Deputy Director, Office of Sustainable Fisheries, National Marine Fisheries Service.

For the reasons set out in the preamble, 50 CFR part 660 is amended as follows:

PART 660—FISHERIES OFF WEST COAST STATES

■ 1. The authority citation for part 660 continues to read as follows:

Authority: 16 U.S.C. 1801 *et seq.,* 16 U.S.C. 773 *et seq.,* and 16 U.S.C. 7001 *et seq.*

■ 2. In § 660.231, paragraph (b)(3)(iv) is revised to read as follows:

§ 660.231 Limited entry fixed gear sablefish primary fishery.

* * * * *

(b) * * *

(3) * * *

(iv) *Incidental halibut retention north of Pt. Chehalis, WA (46° 53.30′ N. lat.).* From May 1 through October 31, vessels authorized to participate in the sablefish primary fishery, licensed by the International Pacific Halibut Commission for commercial fishing in Area 2A (waters off Washington, Oregon, California), and fishing with longline gear north of Pt. Chehalis, WA (46°53.30′ N. lat.) may possess and land up to the following cumulative limits: 75 lb (34 kg) dressed weight of halibut for every 1,000 pounds (454 kg) dressed weight of sablefish landed and up to 2 additional halibut in excess of the 75-pounds-per- 1,000-pound ratio per landing. ''Dressed'' halibut in this area means halibut landed eviscerated with their heads on. Halibut taken and retained in the sablefish primary fishery north of Pt. Chehalis may only be landed north of Pt. Chehalis and may not be possessed or landed south of Pt. Chehalis.

* * * * *

■ 3. In § 660.360, paragraphs (c)(1)(iii) and (c)(1)(iv)(A) are revised to read as follows:

§ 660.360 Recreational fishery—management measures.

* * * * *

(c) * * *

(1) * * *

(iii) *Cabezon.* In areas of the EEZ seaward of Washington that are open to recreational groundfish fishing, the size limits and bag limits are as follows:

(A) Between the U.S./Canada border and 48°10′ N. lat. (Cape Alava) (Washington Marine Area 4), There is a 1 cabezon per day bag limit and cabezon may be no smaller than 18 inches (45.7 cm) total length.

(B) Between 48°10′ N. lat. (Cape Alava) and 46°16′ N. lat. (Washington/Oregon border) (Washington Marine Areas 1–3), there is a 2 cabezon per day bag limit.

(iv) * * *

(A) Between the U.S./Canada border and 48°10′ N. lat. (Cape Alava) (Washington Marine Area 4), recreational fishing for lingcod is open, for 2013, from April 16 through October 12, and for 2014, from April 16 through October 15. Lingcod may be no smaller than 22 inches (61 cm) total length.

* * * * *

[FR Doc. 2013–10698 Filed 5–3–13; 8:45 am]

BILLING CODE 3510–22–P

Proposed Rules

Federal Register
Vol. 78, No. 87
Monday, May 6, 2013

This section of the FEDERAL REGISTER contains notices to the public of the proposed issuance of rules and regulations. The purpose of these notices is to give interested persons an opportunity to participate in the rule making prior to the adoption of the final rules.

DEPARTMENT OF TRANSPORTATION

Federal Aviation Administration

14 CFR Part 25

[Docket No. FAA–2013–0384; Notice No. 25–13–02–SC]

Special Conditions: Embraer, S.A., Model EMB–550 Airplane; Side-Facing Seats; Installation of Airbag Systems in Shoulder Belts

AGENCY: Federal Aviation Administration (FAA), DOT.

ACTION: Notice of proposed special conditions.

SUMMARY: This action proposes special conditions for the Embraer S.A. Model EMB–550 airplane. This airplane will have a novel or unusual design feature(s) associated with multiple place and single place side-facing seats and installation of airbag systems in the shoulder belts. The applicable airworthiness regulations do not contain adequate or appropriate safety standards for this design feature. These proposed special conditions contain the additional safety standards that the Administrator considers necessary to establish a level of safety equivalent to that established by the existing airworthiness standards.

DATES: Send your comments on or before June 20, 2013.

ADDRESSES: Send comments identified by docket number FAA–2013–0384 using any of the following methods:

- *Federal eRegulations Portal:* Go to *http://www.regulations.gov/* and follow the online instructions for sending your comments electronically.
- *Mail:* Send comments to Docket Operations, M–30, U.S. Department of Transportation (DOT), 1200 New Jersey Avenue SE., Room W12–140, West Building Ground Floor, Washington, DC 20590–0001.
- *Hand Delivery or Courier:* Take comments to Docket Operations in Room W12–140 of the West Building Ground Floor at 1200 New Jersey Avenue SE., Washington, DC, between 8 a.m. and 5 p.m., Monday through Friday, except federal holidays.
- *Fax:* Fax comments to Docket Operations at 202–493–2251.

Privacy: The FAA will post all comments it receives, without change, to *http://www.regulations.gov/,* including any personal information the commenter provides. Using the search function of the docket Web site, anyone can find and read the electronic form of all comments received into any FAA docket, including the name of the individual sending the comment (or signing the comment for an association, business, labor union, etc.). DOT's complete Privacy Act Statement can be found in the **Federal Register** published on April 11, 2000 (65 FR 19477–19478), as well as at *http://DocketsInfo.dot.gov/.*

Docket: Background documents or comments received may be read at *http://www.regulations.gov/* at any time. Follow the online instructions for accessing the docket or go to the Docket Operations in Room W12–140 of the West Building Ground Floor at 1200 New Jersey Avenue SE., Washington, DC, between 9 a.m. and 5 p.m., Monday through Friday, except federal holidays.

FOR FURTHER INFORMATION CONTACT: Jayson Claar, FAA, Airframe and Cabin Safety Branch, ANM–115, Transport Airplane Directorate, Aircraft Certification Service, 1601 Lind Avenue SW., Renton, Washington 98057–3356; telephone 425–227–2194; facsimile 425–227–1232.

SUPPLEMENTARY INFORMATION:

Comments Invited

We invite interested people to take part in this rulemaking by sending written comments, data, or views. The most helpful comments reference a specific portion of the special conditions, explain the reason for any recommended change, and include supporting data.

We will consider all comments we receive on or before the closing date for comments. We may change these special conditions based on the comments we receive.

Background

On May 14, 2009, Embraer S.A. applied for a type certificate for their new Model EMB–550 airplane. The Model EMB–550 airplane is the first of a new family of jet airplanes designed for corporate flight, fractional, charter, and private owner operations. The aircraft has a conventional configuration with low wing and T-tail empennage. The primary structure is metal with composite empennage and control surfaces. The Model EMB–550 airplane is designed for 8 passengers, with a maximum of 12 passengers. It is equipped with two Honeywell HTF7500–E medium bypass ratio turbofan engines mounted on aft fuselage pylons. Each engine produces approximately 6,540 pounds (lbs) of thrust for normal takeoff. The primary flight controls consist of hydraulically powered fly-by-wire elevators, aileron and rudder, controlled by the pilot or copilot sidestick.

The Model EMB–550 airplane has proposed interior configurations that include multiple-place side-facing seats and single-place side-facing seats (both referred to as side-facing seats) that include an airbag system in the shoulder belt for these seats. Existing regulations do not provide adequate or appropriate safety standards for occupants of side-facing seats. Also, existing regulations do not provide adequate or appropriate safety standards for the addition of airbag systems in the shoulder belt of side-facing seats. These proposed special conditions will address both issues.

Type Certification Basis

Under the provisions of Title 14, Code of Federal Regulations (14 CFR) 21.17, Embraer S.A. must show that the Model EMB–550 airplane meets the applicable provisions of part 25, as amended by Amendments 25–1 through 25–127 thereto.

If the Administrator finds that the applicable airworthiness regulations (i.e., 14 CFR part 25) do not contain adequate or appropriate safety standards for the Embraer S.A. Model EMB–550 airplane because of a novel or unusual design feature, special conditions are prescribed under the provisions of § 21.16.

Special conditions are initially applicable to the model for which they are issued. Should the type certificate for that model be amended later to include any other model that incorporates the same or similar novel or unusual design feature, the special conditions would also apply to the other model under § 21.101.

In addition to the applicable airworthiness regulations and special conditions, the Embraer S.A. Model EMB–550 airplane must comply with the fuel vent and exhaust emission requirements of 14 CFR part 34 and the noise certification requirements of 14 CFR part 36 and the FAA must issue a finding of regulatory adequacy under § 611 of Public Law 92–574, the ''Noise Control Act of 1972.''

The FAA issues special conditions, as defined in 14 CFR 11.19, in accordance with § 11.38, and they become part of the type-certification basis under § 21.17(a)(2).

Novel or Unusual Design Features

The Embraer S.A. Model EMB–550 airplane will incorporate the following novel or unusual design features: Side-facing seats with an airbag system in the shoulder belt.

The Model EMB–550 airplane will have interior configurations with multiple-place side-facing seats and single-place side-facing seats that include airbag systems in the shoulder belts. Side-facing seats are considered a novel design for transport category airplanes that include Amendment 25–64 in their certification basis and were not anticipated when those airworthiness standards were issued. Therefore, the existing regulations do not provide adequate or appropriate safety standards for occupants of side-facing seats. The airbag systems in the shoulder belts are designed to limit occupant forward excursion in the event of an accident. Using airbag systems in the shoulder belts is novel for commercial aviation.

Discussion

The FAA has been conducting research to develop an acceptable method of compliance with Title 14, Code of Federal Regulations (14 CFR) 25.785(b) for side-facing seat installations. That research has identified additional injury considerations and evaluation criteria. See published report DOT/FAA/AR–09/41, July 2011.

Before this research, the FAA had been granting exemptions for the multiple-place side-facing seat installations since an adequate method of compliance was not available to produce an equivalent level of safety to that level of safety provided for the forward- and aft-facing seats. These exemptions were subject to many conditions that reflected the injury evaluation criteria and mitigation strategies available at the time of the exemption issuance. The FAA has now developed a methodology to address all fully side-facing seats (i.e., seats oriented in the aircraft with the occupant facing 90 degrees to the direction of aircraft travel) and is documenting those requirements in these special conditions. Some of the previous conditions issued for exemptions are still relevant and are included in these new special conditions. However, many of the conditions for exemption have been replaced by different criteria that reflect current research findings.

The FAA had been issuing special conditions to address single-place side-facing seats; however, application of the current research findings has allowed issuing special conditions that are applicable to all fully side-facing seats, both multiple-place and single-place.

Neck-injury evaluation methods applicable to the most common side-facing seat configurations were identified during recent FAA research. The scope of that research, however, did not include deriving specific injury criteria for all possible loading scenarios that could occur to occupants of fully side-facing seats. To limit the injury risk in those cases, these special conditions provide conservative injury evaluation means that are derived from past practice and applicable scientific literature.

Serious leg injuries, such as femur fracture, can occur in aviation side-facing seats that could threaten the occupant's life directly or reduce the occupant's ability to evacuate. Limiting upper-leg axial rotation to a conservative limit of 35 degrees (approximately the 50 percentile range of motion) should also limit the risk of serious leg injury. It is believed that the angle of rotation can be determined by observing lower-leg flailing in typical high-speed video of the dynamic tests. This requirement complies with the intent of the § 25.562(b)(6) injury criteria in preventing serious leg injury.

The requirement to provide support for the pelvis, upper arm, chest, and head, contained in the previous special conditions for single-place side-facing seats, has been replaced in the new special conditions applicable to all fully side-facing seats with requirements for neck-injury evaluation, leg-flailing limits, pelvis-excursion limits, head-excursion limits, and torso lateral-bending limits that directly assess the effectiveness of the support provided by the seat and restraint system.

To protect occupants in aft-facing seats, those seats must have sufficient height and stiffness to support their head and spine. Providing this support is intended to reduce spinal injuries when occupant inertial forces cause it to load against the seat back. If, during a side-facing-seat dynamic test, the flailing of the occupant causes his or her head to translate beyond the plane of the seat back, then this lack of support would not comply with the intent of the requirement to prevent spine injuries, and would not provide the same level of safety afforded occupants of forward- and aft-facing seats.

Results from tests that produced lateral flailing over an armrest indicate that serious injuries, including spinal fractures, would likely occur. While no criteria currently relates the amount of lateral flail to a specific risk of injury, if lateral flexion is limited to the normal static range of motion, then the risk of injury should be low. This range of motion is approximately 40 degrees from the upright position. Ensuring that lateral flexion does not create a significant injury risk is consistent with the goal of providing an equivalent level of safety to a forward or aft facing seat, because that type of articulation of those seats does not occur during forward impacts.

Section 25.562 requires that the restraints remain on the shoulder and pelvis of the occupant during impact. Advisory Circular (AC) 25.562–1B, *Dynamic Evaluation of Seat Restraint Systems and Occupant Protection on Transport Airplanes,* dated January 10, 2006, clarifies this by stating that restraints must remain on the shoulder and pelvis when loaded by the occupant. This criterion is necessary to protect the occupant from serious injury that could be caused by lap-belt contact forces applied to soft tissue or by ineffective restraint of the upper torso caused by the upper torso restraint sliding off the shoulder. In forward-facing seats (the type specifically addressed by that AC), occupant motion during rebound, and any subsequent re-loading of the belts, is limited by interaction with the seat back. However, in a side-facing seat subjected to a forward impact, the restraint system may be the only means of limiting the occupant's rearward (rebound) motion. So to limit abdominal injury risk in side-facing seats, the lap belt must remain on the pelvis throughout the impact event, including rebound.

During side-facing-seat dynamic tests, the risk for head injury is assessed with only one occupant size (the 50th percentile male as represented by the ES–2re as defined in 49 CFR part 572 supbart U). However, protection for a range of occupant statures can be provided if the impacted surface is homogenous in the area contactable by that range of occupants.

The FAA has issued special conditions in the past for airbag systems on lap belts for some forward-facing seats. These special conditions for the airbag system in the shoulder belt are based on the previous special conditions for airbag systems on lap belts with some changes to address the specific issues of side-facing seats. The special conditions are not an installation approval. Therefore, while the special conditions relate to each such system installed, the overall installation approval is a separate finding, and must consider the combined effects of all such systems installed.

The FAA has considered the installation of an airbag system in the shoulder belt to have two primary safety concerns: First, that the system performs properly under foreseeable operating conditions, and second, that the system does not perform in a manner or at such times as would constitute a hazard to the occupants. This latter point has the potential to be the more rigorous of the requirements, owing to the active nature of the system.

Applicability

As discussed above, these special conditions are applicable to the Embraer S.A. Model EMB–550 airplane. Should Embraer S.A. apply at a later date for a change to the type certificate to include another model incorporating the same novel or unusual design feature, the special conditions would apply to that model as well.

Conclusion

This action affects only certain novel or unusual design features on one model of airplanes. It is not a rule of general applicability.

List of Subjects in 14 CFR Part 25

Aircraft, Aviation safety, Reporting and recordkeeping requirements.

The authority citation for these special conditions is as follows:

Authority: 49 U.S.C. 106(g), 40113, 44701, 44702, 44704.

The Proposed Special Conditions

Accordingly, the Federal Aviation Administration (FAA) proposes the following special conditions as part of the type certification basis for Embraer S.A. Model EMB–550 airplanes. In addition to the requirements of §§ 25.562 and 25.785, the following special condition numbers 1 and 2 are proposed as part of the type certification basis of the airplane(s) with side-facing-seat installations. For seat place(s) equipped with an airbag system in the shoulder belt, additional special condition numbers 3 through 16 are proposed as part of the type certification basis.

1. Additional requirements applicable to tests or rational analysis conducted to show compliance with §§ 25.562 and 25.785 for side-facing seats:

(a) The longitudinal test(s) conducted in accordance with § 25.562(b)(2) to show compliance with the seat-strength requirements of § 25.562(c)(7) and (8), and these special conditions must have an ES–2re anthropomorphic test dummy (ATD) (49 CFR part 572 subpart U) or equivalent, or a Hybrid-II ATD (49 CFR part 572, subpart B as specified in § 25.562) or equivalent, occupying each seat position and including all items contactable by the occupant (e.g., armrest, interior wall, or furnishing) if those items are necessary to restrain the occupant. If included, the floor representation and contactable items must be located such that their relative position, with respect to the center of the nearest seat place, is the same at the start of the test as before floor misalignment is applied. For example, if floor misalignment rotates the centerline of the seat place nearest the contactable item 8 degrees clockwise about the aircraft *x*-axis, then the item and floor representations must be rotated by 8 degrees clockwise also to maintain the same relative position to the seat place, as shown in Figure 1. Each ATD's relative position to the seat after application of floor misalignment must be the same as before misalignment is applied. To ensure proper loading of the seat by the occupants, the ATD pelvis must remain supported by the seat pan, and the restraint system must remain on the pelvis and shoulder of the ATD until rebound begins. No injury-criteria evaluation is necessary for tests conducted only to assess seat-strength requirements.

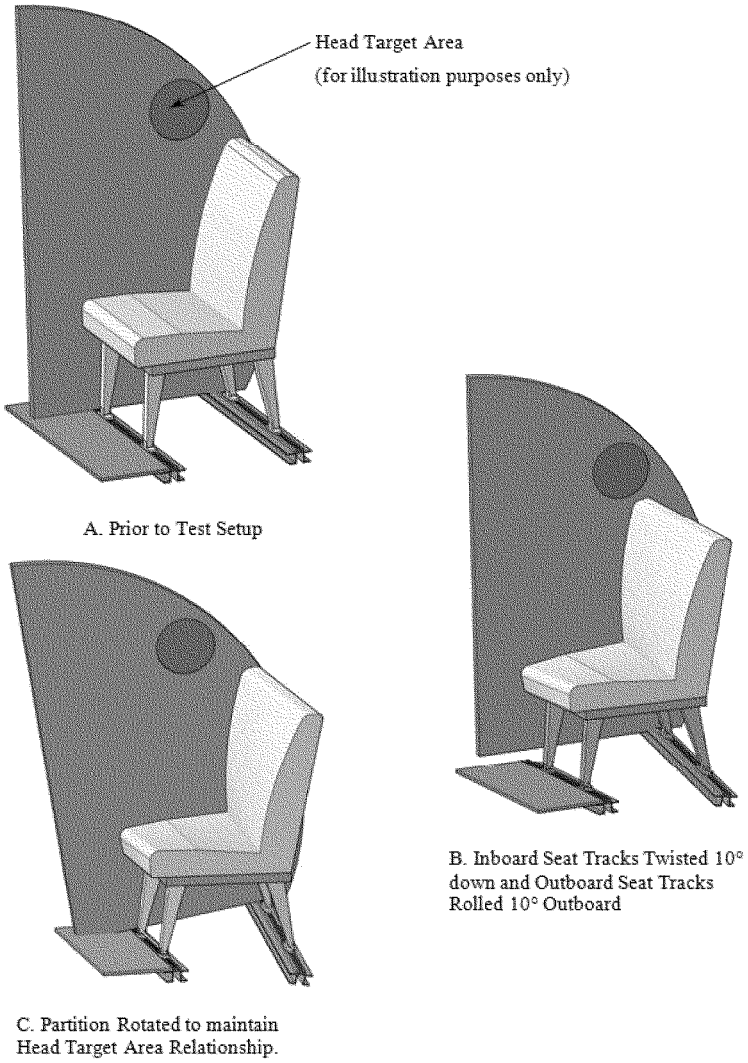

Figure 1: Head Target Areas Relative to Seat Position

(b) The longitudinal test(s) conducted in accordance with § 25.562(b)(2), to show compliance with the injury assessments required by § 25.562(c) and these special conditions, may be conducted separately from the test(s) to show structural integrity. In this case, structural-assessment tests must be conducted as specified in paragraph 1(a) of these special conditions, and the injury-assessment test must be conducted without yaw or floor misalignment. Injury assessments may be accomplished by testing with ES–2re ATD (49 CFR part 572 subpart U) or equivalent at all places. Alternatively, these assessments may be accomplished by multiple tests that use an ES–2re at the seat place being evaluated, and a Hybrid-II ATD (49 CFR part 572, subpart B, as specified in § 25.562) or equivalent used in all seat places forward of the one being assessed, to evaluate occupant interaction. In this case, seat places aft of the one being assessed may be unoccupied. If a seat installation includes adjacent items that are contactable by the occupant, the injury potential of that contact must be assessed. To make this assessment, tests may be conducted that include the actual item, located and attached in a representative fashion. Alternatively, the injury potential may be assessed by a combination of tests with items having the same geometry as the actual item, but having stiffness characteristics that would create the worst case for injury (injuries due to both contact with the item and lack of support from the item).

(c) If a seat is installed aft of structure (e.g., an interior wall or furnishing) that does not have a homogeneous surface contactable by the occupant, additional analysis and/or test(s) may be required to demonstrate that the injury criteria are met for the area which an occupant could contact. For example, different yaw angles could result in different injury considerations and may require additional analysis or separate test(s) to evaluate.

(d) To accommodate a range of occupant heights (5th percentile female to 95th percentile male), the surface of items contactable by the occupant must be homogenous 7.3 inches (185 mm) above and 7.9 inches (200 mm) below the point (center of area) that is contacted by the 50th percentile male size ATD's head during the longitudinal test(s) conducted in accordance with paragraphs 1(a), 1(b), and 1(c) of these special conditions. Otherwise, additional head-injury criteria (HIC) assessment tests may be necessary. Any surface (inflatable or otherwise) that provides support for the occupant of any seat place must provide that

support in a consistent manner regardless of occupant stature. For example, if an inflatable shoulder belt is used to mitigate injury risk, then it must be demonstrated by inspection to bear against the range of occupants in a similar manner before and after inflation. Likewise, the means of limiting lower-leg flail must be demonstrated by inspection to provide protection for the range of occupants in a similar manner.

(e) For longitudinal test(s) conducted in accordance with § 25.562(b)(2) and these special conditions, the ATDs must be positioned, clothed, and have lateral instrumentation configured as follows:

(1) ATD positioning:

(i) Lower the ATD vertically into the seat while simultaneously (see Figure 2 for illustration):

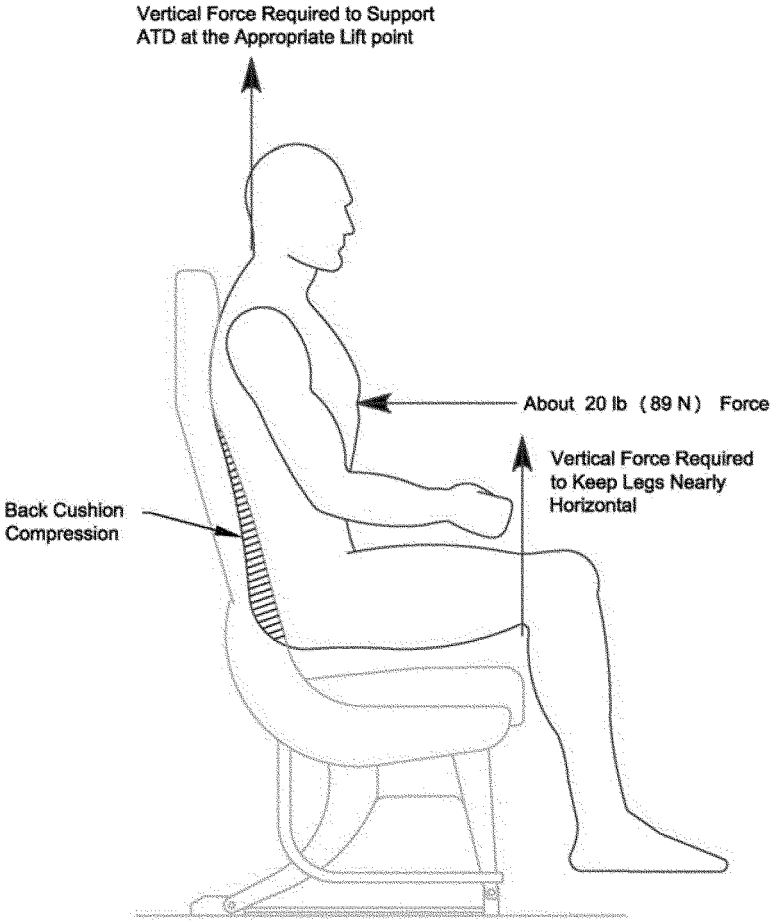

Figure 2: ATD Positioning

(A) Aligning the midsagittal plane (a vertical plane through the midline of the body; dividing the body into right and left halves) with approximately the middle of the seat place.

(B) Applying a horizontal *x*-axis direction (in the ATD coordinate system) force of about 20 pounds (lbs) (89 Newtons [N]) to the torso at approximately the intersection of the midsagittal plane and the bottom rib of the ES–2re or lower sternum of the Hybrid-II at the midsagittal plane, to compress the seat back cushion.

(C) Keeping the upper legs nearly horizontal by supporting them just behind the knees.

(ii) Once all lifting devices have been removed from the ATD:

(A) Rock it slightly to settle it in the seat.

(B) Separate the knees by about 4 inches (100 mm)

(C) Set the ES–2re's head at approximately the midpoint of the available range of *z*-axis rotation (to align the head and torso midsagittal planes).

(D) Position the ES–2re's arms at the joint's mechanical detent that puts them at approximately a 40 degree angle with respect to the torso. Position the Hybrid-II ATD hands on top of its upper legs.

(E) Position the feet such that the centerlines of the lower legs are approximately parallel to a lateral vertical plane (in the aircraft coordinate system).

(2) ATD clothing: Clothe each ATD in form-fitting, mid-calf-length (minimum) pants and shoes (size 11E) weighing about 2.5 lb (1.1 Kg) total. The color of the clothing should be in contrast to the color of the restraint system. The ES–2re jacket is sufficient for torso clothing, although a form-fitting shirt may be used in addition if desired.

(3) ES–2re ATD lateral instrumentation: The rib-module linear slides are directional, i.e., deflection occurs in either a positive or negative ATD *y*-axis direction. The modules must be installed such that the moving end of the rib module is toward the front of the aircraft. The three abdominal force sensors must be installed such that they

are on the side of the ATD toward the front of the aircraft.

(f) The combined horizontal/vertical test, required by § 25.562(b)(1) and these special conditions, must be conducted with a Hybrid II ATD (49 CFR part 572 subpart B as specified in § 25.562), or equivalent, occupying each seat position.

(g) Restraint systems:

(1) If inflatable restraint systems are used, they must be active during all dynamic tests conducted to show compliance with § 25.562.

(2) The design and installation of seat-belt buckles must prevent unbuckling due to applied inertial forces or impact of the hands/arms of the occupant during an emergency landing.

2. Additional performance measures applicable to tests and rational analysis conducted to show compliance with §§ 25.562 and 25.785 for side-facing seats:

(a) Body-to-body contact: Contact between the head, pelvis, torso, or shoulder area of one ATD with the adjacent-seated ATD's head, pelvis, torso, or shoulder area is not allowed. Contact during rebound is allowed.

(b) Thoracic: The deflection of any of the ES–2re ATD upper, middle, and lower ribs must not exceed 1.73 inches (44 mm). Data must be processed as defined in Federal Motor Vehicle Safety Standards (FMVSS) 571.214.

(c) Abdominal: The sum of the measured ES–2re ATD front, middle, and rear abdominal forces must not exceed 562 lb (2,500 N). Data must be processed as defined in FMVSS 571.214.

(d) Pelvic: The pubic symphysis force measured by the ES–2re ATD must not exceed 1,350 lb (6,000 N). Data must be processed as defined in FMVSS 571.214.

(e) Leg: Axial rotation of the upper-leg (femur) must be limited to 35 degrees in either direction from the nominal seated position.

(f) Neck: As measured by the ES–2re ATD and filtered at channel frequency class (CFC) 600 as defined in SAE J211:

(1) The upper-neck tension force at the occipital condyle (O.C.) location must be less than 405 lb (1,800 N).

(2) The upper-neck compression force at the O.C. location must be less than 405 lb (1,800 N).

(3) The upper-neck bending torque about the ATD *x*-axis at the O.C. location must be less than 1,018 in-lb (115 Nm).

(4) The upper-neck resultant shear force at the O.C. location must be less than 186 lb (825 N).

(g) Occupant (ES–2re ATD) retention: The pelvic restraint must remain on the ES–2re ATD's pelvis during the impact and rebound phases of the test. The upper-torso restraint straps (if present) must remain on the ATD's shoulder during the impact.

(h) Occupant (ES–2re ATD) support:

(1) Pelvis excursion: The load-bearing portion of the bottom of the ATD pelvis must not translate beyond the edges of its seat's bottom seat-cushion supporting structure.

(2) Upper-torso support: The lateral flexion of the ATD torso must not exceed 40 degrees from the normal upright position during the impact.

3. For seats with an airbag system in the shoulder belts, show that the airbag system in the shoulder belt will deploy and provide protection under crash conditions where it is necessary to prevent serious injury. The means of protection must take into consideration a range of stature from a 2-year-old child to a 95th percentile male. The airbag system in the shoulder belt must provide a consistent approach to energy absorption throughout that range of occupants. When the seat system includes an airbag system, that system must be included in each of the certification tests as it would be installed in the airplane. In addition, the following situations must be considered:

(a) The seat occupant is holding an infant.

(b) The seat occupant is a pregnant woman.

4. The airbag system in the shoulder belt must provide adequate protection for each occupant regardless of the number of occupants of the seat assembly, considering that unoccupied seats may have an active airbag system in the shoulder belt.

5. The design must prevent the airbag system in the shoulder belt from being either incorrectly buckled or incorrectly installed, such that the airbag system in the shoulder belt would not properly deploy. Alternatively, it must be shown that such deployment is not hazardous to the occupant, and will provide the required injury protection.

6. It must be shown that the airbag system in the shoulder belt is not susceptible to inadvertent deployment as a result of wear and tear, or inertial loads resulting from in-flight or ground maneuvers (e.g., including gusts and hard landings), and other operating and environmental conditions (e.g., vibrations and moisture) likely to occur in service.

7. Deployment of the airbag system in the shoulder belt must not introduce injury mechanisms to the seated occupant, or result in injuries that could impede rapid egress. This assessment should include an occupant whose belt is loosely fastened.

8. It must be shown that inadvertent deployment of the airbag system in the shoulder belt, during the most critical part of the flight, will either meet the requirement of § 25.1309(b) or not cause a hazard to the airplane or its occupants.

9. It must be shown that the airbag system in the shoulder belt will not impede rapid egress of occupants 10 seconds after airbag deployment.

10. The airbag system must be protected from lightning and high-intensity radiated fields (HIRF). The threats to the airplane specified in existing regulations regarding lighting, § 25.1316, and HIRF, § 25.1317, are incorporated by reference for the purpose of measuring lightning and HIRF protection.

11. The airbag system in the shoulder belt must function properly after loss of normal aircraft electrical power, and after a transverse separation of the fuselage at the most critical location. A separation at the location of the airbag system in the shoulder belt does not have to be considered.

12. It must be shown that the airbag system in the shoulder belt will not release hazardous quantities of gas or particulate matter into the cabin.

13. The airbag system in the shoulder-belt installation must be protected from the effects of fire such that no hazard to occupants will result.

14. A means must be available for a crew member to verify the integrity of the airbag system in the shoulder-belt activation system prior to each flight, or it must be demonstrated to reliably operate between inspection intervals. The FAA considers that the loss of the airbag-system deployment function alone (i.e., independent of the conditional event that requires the airbag-system deployment) is a major-failure condition.

15. The inflatable material may not have an average burn rate of greater than 2.5 inches/minute when tested using the horizontal flammability test defined in part 25, appendix F, part I, paragraph (b)(5).

16. The airbag system in the shoulder belt, once deployed, must not adversely affect the emergency-lighting system (i.e., block floor proximity lights to the extent that the lights no longer meet their intended function).

Issued in Renton, Washington, on April 30, 2013.

Ali Bahrami,

Manager, Transport Airplane Directorate, Aircraft Certification Service.

[FR Doc. 2013–10581 Filed 5–3–13; 8:45 am]

BILLING CODE 4910–13–P

DEPARTMENT OF TRANSPORTATION

Federal Aviation Administration

14 CFR Part 39

[Docket No. FAA–2012–0425; Directorate Identifier 2011–NM–273–AD]

RIN 2120–AA64

Airworthiness Directives; The Boeing Company Airplanes

AGENCY: Federal Aviation Administration (FAA), DOT.

ACTION: Supplemental notice of proposed rulemaking (NPRM); reopening of comment period.

SUMMARY: We are revising an earlier proposed airworthiness directive (AD) for all The Boeing Company Model 717–200 airplanes. That NPRM proposed requiring repetitive inspections for cracking of the overwing frames, and corrective actions if necessary. That NPRM was prompted by multiple reports of cracks of overwing frames. This action revises that NPRM by revising the initial compliance time and providing an optional modification that would extend the compliance time for the next repetitive inspection. We are proposing this supplemental NPRM to detect and correct such cracking, which could sever a frame and increase the loading of adjacent frames, and could result in damage to the adjacent structure and consequent loss of structural integrity of the airplane. Since certain actions impose an additional burden over that proposed in the NPRM, we are reopening the comment period to allow the public the chance to comment on these proposed changes.

DATES: We must receive comments on this supplemental NPRM by June 20, 2013.

ADDRESSES: You may send comments, using the procedures found in 14 CFR 11.43 and 11.45, by any of the following methods:

- *Federal eRulemaking Portal:* Go to *http://www.regulations.gov.* Follow the instructions for submitting comments.
- *Fax:* 202–493–2251.
- *Mail:* U.S. Department of Transportation, Docket Operations, M–30, West Building Ground Floor, Room W12–140, 1200 New Jersey Avenue SE., Washington, DC 20590.
- *Hand Delivery:* U.S. Department of Transportation, Docket Operations, M–30, West Building Ground Floor, Room W12–140, 1200 New Jersey Avenue SE., Washington, DC 20590, between 9 a.m. and 5 p.m., Monday through Friday, except Federal holidays.

For service information identified in this proposed AD, contact Boeing Commercial Airplanes, Attention: Data & Services Management, 3855 Lakewood Boulevard, MC D800–0019, Long Beach, CA 90846–0001; telephone 206–544–5000, extension 2; fax 206–766–5683; Internet *https://www.myboeingfleet.com.* You may review copies of the referenced service information at the FAA, Transport Airplane Directorate, 1601 Lind Avenue SW., Renton, WA. For information on the availability of this material at the FAA, call 425–227–1221.

Examining the AD Docket

You may examine the AD docket on the Internet at *http://www.regulations.gov;* or in person at the Docket Management Facility between 9 a.m. and 5 p.m., Monday through Friday, except Federal holidays. The AD docket contains this proposed AD, the regulatory evaluation, any comments received, and other information. The street address for the Docket Office (phone: 800–647–5527) is in the **ADDRESSES** section. Comments will be available in the AD docket shortly after receipt.

FOR FURTHER INFORMATION CONTACT: George Garrido, Aerospace Engineer, Airframe Branch, ANM–120L, FAA, Los Angeles Aircraft Certification Office, 3960 Paramount Boulevard, Lakewood, CA 90712–4137; phone: 562–627–5357; fax: 562–627–5210; email: *george.garrido@faa.gov.*

SUPPLEMENTARY INFORMATION:

Comments Invited

We invite you to send any written relevant data, views, or arguments about this proposed AD. Send your comments to an address listed under the **ADDRESSES** section. Include ''Docket No. FAA–2012–0425; Directorate Identifier 2011–NM–273–AD'' at the beginning of your comments. We specifically invite comments on the overall regulatory, economic, environmental, and energy aspects of this proposed AD. We will consider all comments received by the closing date and may amend this proposed AD because of those comments.

We will post all comments we receive, without change, to *http://www.regulations.gov,* including any personal information you provide. We will also post a report summarizing each substantive verbal contact we receive about this proposed AD.

Discussion

We issued a notice of proposed rulemaking (NPRM) to amend 14 CFR part 39 to include an AD that would apply to all The Boeing Company Model 717–200 airplanes. That NPRM published in the **Federal Register** on May 9, 2012 (77 FR 27142). That NPRM proposed to require repetitive inspections for cracking of the overwing frames, and corrective actions if necessary.

Actions Since Previous NPRM Was Issued

Since we issued the previous NPRM (77 FR 27142, May 9, 2012), we received additional reports of overwing frame cracks on this model. The cracking occurred below the previous NPRM initial compliance time of 20,000 total flight cycles. Thus, we have determined that a shorter compliance time for the initial inspection is necessary.

Relevant Service Information

We have reviewed Boeing Alert Service Bulletin 717–53A0034, Revision 1, dated November 7, 2012; and Boeing Service Bulletin 717–53–0035, dated June 8, 2012. For information on the procedures and compliance times, see this service information at *http://www.regulations.gov* by searching for Docket No. FAA–2012–0425.

Comments

We gave the public the opportunity to comment on the previous NPRM (77 FR 27142, May 9, 2012). The following presents the comments received on the previous NPRM and the FAA's response to each comment.

Request To Extend Comment Period

Boeing requested that we revise the original NPRM (77 FR 27142, May 9, 2012) to extend the comment period for up to 90 additional days to give time to assess the information provided in the reports of Model 717 overwing frame cracks.

We do not agree with the commenter's request to extend the comment period since we are issuing this supplemental NPRM (before issuing the final rule), which automatically extends the comment period. We have not changed the AD in this regard.

Request To Delay Issuance of AD

Airtran/Southwest Airlines requested a delay in the issuance of this AD until Boeing (the original equipment manufacturer) had time to build up an adequate stock of kits and/or frames until frame replacements are required.

We disagree with the request to delay release of the AD since Boeing has advised the FAA that the required kits will be available in support of the compliance time of the AD. We have not

changed this supplemental NPRM in this regard.

Request To Add Optional Overwing Frames Modification

Airtran/Southwest Airlines requested that we revise the original NPRM (77 FR 27142, May 9, 2012) to add a paragraph stating:

> If Boeing Service Bulletin 717–53–0035, dated June 8, 2012 is accomplished, the inspection of overwing frame(s) for cracks can be extended to 45,000 flight cycles from the time of modification of SB 717–53–0035 and 15,000 flight cycles thereafter.

We agree with the commenter's request to add a paragraph to add the overwing frames modification as an option to the AD because the modification provides protection against cracking of the overwing frame(s). We disagree that the initial compliance time can be extended to 45,000 flight cycles, but agree that the first post-modification high frequency eddy current (HFEC) repetitive inspection may be extended to 45,000 flight cycles. We have added paragraph (h) to this supplemental NPRM to provide this option. We have also revised paragraph (g) in this supplemental NPRM to correspond to the manufacturer's recommended initial compliance time for the inspections before the accumulation of 12,000 total flight cycles, with a compliance time of 24 months or 8,275 flight cycles, whichever occurs first.

FAA's Determination

We are proposing this supplemental NPRM because we evaluated all the relevant information and determined the unsafe condition described previously is likely to exist or develop in other products of the same type design. Certain changes described above expand the scope of the original NPRM (77 FR 27142, May 9, 2012). As a result, we have determined that it is necessary to reopen the comment period to provide additional opportunity for the public to comment on this supplemental NPRM.

Proposed Requirements of the Supplemental NPRM

This supplemental NPRM would require accomplishing the actions specified in the service information described previously, except as discussed under ''Differences Between the Supplemental NPRM and the Service Information.''

Differences Between the Supplemental NPRM and the Service Information

Boeing Service Bulletin 717–53–0035, dated June 8, 2012, specifies to contact the manufacturer for FAA-approved repair instructions. This proposed AD would require repairing those conditions in one of the following ways:

- Using a method that we approve; or
- Using data that meet the certification basis of the airplane, and that have been approved by an Authorized Representative for the Boeing Commercial Airplanes ODA whom we have authorized to make those findings.

Where Boeing Alert Service Bulletin 717–53A0034, Revision 1, dated November 7, 2012, provides a compliance time for the initial inspection (specified in paragraph (g) of this supplemental NPRM) of before 12,000 total flight cycles or within 8,275 flight cycles after the effective date of this AD, whichever occurs later, this AD provides a compliance time of the later of either before the accumulation of 12,000 total flight cycles, or within 8,275 flight cycles or 24 months after the effective date of this AD, whichever occurs first. In developing an appropriate compliance time for this AD, we considered not only the manufacturer's recommendation, but the degree of urgency associated with addressing the subject unsafe condition, the average utilization of the affected fleet, and the time necessary to perform the inspections. In light of all of these factors, we find a minimum compliance time of 24 months or 8,275 flight cycles after the effective date of this AD for completing the required actions to be warranted, in that it represents an appropriate interval of time for affected airplanes to continue to operate without compromising safety. This difference has been coordinated with Boeing.

Costs of Compliance

We estimate that this proposed AD affects 129 airplanes of U.S. registry.

We estimate the following costs to comply with this proposed AD:

ESTIMATED COSTS

Action	Labor cost	Parts cost	Cost per product	Cost on U.S. operators
Inspections	46 work-hours × $85 per hour = $3,910 per inspection cycle.	$0	$3,910	$504,390.
Installation of optional modification	30 work-hours × $85 per hour = $2,550 per inspection cycle.	Up to $2,727	Up to $5,277	Up to $680,733.

We estimate the following costs to do any necessary replacements/repairs that would be required based on the results of the proposed inspections. We have no way of determining the number of aircraft that might need these replacements:

ON-CONDITION COSTS

Action	Labor cost	Parts cost	Cost per product
Blendout repair	12 work-hours × $85 per hour = $1,020	$0	$1,020.
Replacement of a frame station	130 work-hours × $85 per hour = $11,050	Up to $86,977	Up to $98,027.

Authority for This Rulemaking

Title 49 of the United States Code specifies the FAA's authority to issue rules on aviation safety. Subtitle I, section 106, describes the authority of the FAA Administrator. ''Subtitle VII: Aviation Programs'' describes in more detail the scope of the Agency's authority.

We are issuing this rulemaking under the authority described in Subtitle VII, Part A, Subpart III, Section 44701: ''General requirements.'' Under that section, Congress charges the FAA with

promoting safe flight of civil aircraft in air commerce by prescribing regulations for practices, methods, and procedures the Administrator finds necessary for safety in air commerce. This regulation is within the scope of that authority because it addresses an unsafe condition that is likely to exist or develop on products identified in this rulemaking action.

Regulatory Findings

We determined that this proposed AD would not have federalism implications under Executive Order 13132. This proposed AD would not have a substantial direct effect on the States, on the relationship between the national Government and the States, or on the distribution of power and responsibilities among the various levels of government.

For the reasons discussed above, I certify this proposed regulation:

(1) Is not a ''significant regulatory action'' under Executive Order 12866,

(2) Is not a ''significant rule'' under the DOT Regulatory Policies and Procedures (44 FR 11034, February 26, 1979),

(3) Will not affect intrastate aviation in Alaska, and

(4) Will not have a significant economic impact, positive or negative, on a substantial number of small entities under the criteria of the Regulatory Flexibility Act.

List of Subjects in 14 CFR Part 39

Air transportation, Aircraft, Aviation safety, Incorporation by reference, Safety.

The Proposed Amendment

Accordingly, under the authority delegated to me by the Administrator, the FAA proposes to amend 14 CFR part 39 as follows:

PART 39—AIRWORTHINESS DIRECTIVES

■ 1. The authority citation for part 39 continues to read as follows:

Authority: 49 U.S.C. 106(g), 40113, 44701.

§ 39.13 [Amended]

■ 2. The FAA amends § 39.13 by adding the following new airworthiness directive (AD):

The Boeing Company: Docket No. FAA–2012–0425; Directorate Identifier 2011–NM–273–AD.

(a) Comments Due Date

We must receive comments by June 20, 2013.

(b) Affected ADs

None.

(c) Applicability

This AD applies to all The Boeing Company Model 717–200 airplanes, certificated in any category.

(d) Subject

Joint Aircraft System Component (JASC)/Air Transport Association (ATA) of America Code 53, Fuselage.

(e) Unsafe Condition

This AD was prompted by multiple reports of cracks of overwing frames. We are issuing this AD to detect and correct such cracking that could sever a frame, which may increase the loading of adjacent frames, and result in damage to the adjacent structure and consequent loss of structural integrity of the airplane.

(f) Compliance

Comply with this AD within the compliance times specified, unless already done.

(g) Inspections and Corrective Actions

At the later of the times specified in paragraphs (g)(1) and (g)(2) of this AD: Do a general visual inspection and a high frequency eddy current (HFEC) inspection for cracking of the left-side and right-side overwing frames at stations 674, 696, and 715; and do all applicable corrective actions; in accordance with the Accomplishment Instructions of Boeing Alert Service Bulletin 717–53A0034, Revision 1, dated November 7, 2012. Repeat the inspections thereafter at the applicable time specified in paragraph 1.E., ''Compliance,'' of Boeing Alert Service Bulletin 717–53A0034, Revision 1, dated November 7, 2012, except as provided by paragraph (h) of this AD.

(1) Before the accumulation of 12,000 total flight cycles.

(2) Within 24 months or 8,275 flight cycles after the effective date of this AD, whichever occurs first.

(h) Optional Terminating Action

Modification of left-side and right-side overwing frames at stations 674, 696, and 715, in accordance with the Accomplishment Instructions of Boeing Service Bulletin 717–53–0035, dated June 8, 2012, terminates the inspections required by paragraph (g) of this AD, and extends the compliance time of the modified area for the next repetitive HFEC inspection to 45,000 flight cycles after the modification, provided that the actions in paragraphs (h)(1), (h)(2), and (h)(3) of this AD are accomplished, in accordance with the Accomplishment Instructions of Boeing Alert Service Bulletin 717–53–0035, dated June 8, 2012. Do the inspections specified in paragraph (g) of this AD prior to, or concurrently with, the modification specified in paragraph (h) of this AD.

(1) The overwing frame improvement modification of left-side and right-side overwing frames at stations 674, 696, and 715 is installed and HFEC inspection is done within 45,000 flight cycles from the time the modification is installed, in accordance with the Accomplishment Instructions of Boeing Service Bulletin 717–53–0035, dated June 8, 2012.

(2) If no crack is found during any inspection specified by paragraph (h)(1) of this AD, the HFEC inspections at the modified area are repeated thereafter at the applicable time specified in paragraph 1.E., ''Compliance,'' of Boeing Alert Service Bulletin 717–53–0035, dated June 8, 2012.

(3) If any crack is found during any inspection specified by paragraph (h)(1) of this AD, the frame is repaired or replaced using a method approved in accordance with the procedures specified in paragraph (j) of this AD, before further flight.

(i) Credit for Previous Actions

This paragraph provides credit for the actions required by paragraph (g) of this AD, if the general visual inspection and HFEC inspection for cracking of the left-side and right-side overwing frames at stations 674, 696, and 715, and the applicable related investigative and corrective actions, were performed before the effective date of this AD using Boeing Alert Service Bulletin 717–53A0034, dated October 5, 2011, which is not incorporated by reference in this AD.

(j) Alternative Methods of Compliance (AMOCs)

(1) The Manager, Los Angeles Aircraft Certification Office (ACO), FAA, has the authority to approve AMOCs for this AD, if requested using the procedures found in 14 CFR 39.19. In accordance with 14 CFR 39.19, send your request to your principal inspector or local Flight Standards District Office, as appropriate. If sending information directly to the manager of the ACO, send it to the attention of the person identified in the Related Information section of this AD.

(2) Before using any approved AMOC, notify your appropriate principal inspector, or lacking a principal inspector, the manager of the local flight standards district office/certificate holding district office.

(3) An AMOC that provides an acceptable level of safety may be used for any repair required by this AD if it is approved by the Boeing Commercial Airplanes Organization Designation Authorization (ODA) that has been authorized by the Manager, Los Angeles ACO to make those findings. For a repair method to be approved, the repair must meet the certification basis of the airplane and 14 FR 25.571, Amendment 45, and the approval must specifically refer to this AD.

(k) Related Information

(1) For more information about this AD, contact George Garrido, Aerospace Engineer, Airframe Branch, ANM–120L, FAA, Los Angeles Aircraft Certification Office, 3960 Paramount Boulevard, Lakewood, CA 90712–4137; phone: 562–627–5357; fax: 562–627–5210; email: *george.garrido@faa.gov.*

(2) For service information identified in this AD, contact Boeing Commercial Airplanes, Attention: Data & Services Management, 3855 Lakewood Boulevard, MC D800–0019, Long Beach, CA 90846–0001; telephone 206–544–5000, extension 2; fax 206–766–5683; Internet *https://www.myboeingfleet.com.* You may review copies of the referenced service information at the FAA, Transport Airplane Directorate, 1601 Lind Avenue SW., Renton, Washington.

For information on the availability of this material at the FAA, call 425–227–1221.

Issued in Renton, Washington, on April 26, 2013.

Ali Bahrami,

Manager, Transport Airplane Directorate, Aircraft Certification Service.

[FR Doc. 2013–10652 Filed 5–3–13; 8:45 am]

BILLING CODE 4910–13–P

FEDERAL TRADE COMMISSION

16 CFR PART 23

Guides for the Jewelry, Precious Metals, and Pewter Industries: Public Roundtable

AGENCY: Federal Trade Commission (''FTC'' or ''Commission'').

ACTION: Announcement of public roundtable.

SUMMARY: The Federal Trade Commission (''FTC'' or ''Commission'') will hold a public roundtable on June 19, 2013 to examine possible modifications to the FTC's Guides for the Jewelry, Precious Metals, and Pewter Industries (''Jewelry Guides'' or ''Guides''). This Notice describes the issues the roundtable will examine and invites comments regarding the questions to be addressed.

DATES: The roundtable will be held on Wednesday, June 19, 2013, from 9:00 a.m. to 1:00 p.m. at the FTC's Satellite Building Conference Center, located at 601 New Jersey Avenue NW., Washington, DC 20001. Prior to the roundtable, the Commission will publish an agenda and further information on its Web site. Comments will be accepted until June 5, 2013.

Registration Information: The roundtable is open to the public, and there is no fee for attendance. For admittance to the Conference Center, all attendees will be required to show a valid photo identification, such as a driver's license. The FTC will accept pre-registration for this roundtable. Pre-registration is not necessary to attend, but is encouraged so that we may better plan this event. To pre-register, please email your name and affiliation to *lkoss@ftc.gov*. When you pre-register, we will collect your name, affiliation, and your email address. This information will be used to estimate how many people will attend. We may use your email address to contact you with information about the roundtable.

Under the Freedom of Information Act (''FOIA'') or other laws, we may be required to disclose to outside organizations the information you provide. For additional information, including routine uses permitted by the Privacy Act, see the Commission's Privacy Policy at *www.ftc.gov/ftc/privacy.htm*. The FTC Act and other laws the Commission administers permit the collection of this contact information for consideration and use for the above purposes.

ADDRESSES: The submission of comments is not required for attendance at the roundtable. Interested parties may file comments online or on paper by following the instructions in the Request for Comments part of the **SUPPLEMENTARY INFORMATION** section below. Write ''Jewelry Guides Roundtable, 16 CFR Part 23, Project No. G711001'' on your comment, and file your comment online at *https://ftcpublic.commentworks.com/ftc/jewelryguidesroundtable* by following the instructions on the web-based form. If you prefer to file your comment on paper, mail or deliver your comment to the following address: Federal Trade Commission, Office of the Secretary, Room H–113 (Annex O), 600 Pennsylvania Avenue NW., Washington, DC 20580.

FOR FURTHER INFORMATION CONTACT: Reenah L. Kim, Attorney, (202) 326–2272, or Laura D. Koss, Attorney, (202) 326–2890, Division of Enforcement, Bureau of Consumer Protection, Federal Trade Commission, 600 Pennsylvania Avenue NW., Mailstop M–8102B, Washington, DC 20580.

SUPPLEMENTARY INFORMATION:

I. Introduction

The FTC commenced its regulatory review of the Jewelry Guides on July 2, 2012 with the publication of a **Federal Register** Notice (''2012 Notice'') seeking public comments on the Guides.[1] After review of comments received in response, the FTC has determined that a public roundtable will help it address possible revisions to the Guides. Accordingly, the Commission will hold such a roundtable on June 19, 2013.

To facilitate a productive roundtable, this announcement first provides background on the Jewelry Guides and the regulatory review process, including comments received in response to the 2012 Notice. It then provides a brief description of the issues the upcoming roundtable will explore, outlines questions to be addressed, and invites comments for further discussion of these issues.

A. Background Information

The Jewelry Guides address claims made about precious metal, pewter, diamond, gemstone, and pearl products. 16 CFR Part 23. The Guides explain how to avoid making deceptive claims and, for certain products, discuss when disclosures should be made to avoid unfair or deceptive trade practices.[2]

B. Jewelry Guides Regulatory Review

The 2012 Notice commenced the decennial review of the Jewelry Guides.[3] The Notice solicited public comments in response to questions about the Guides' costs, benefits, and effectiveness. It also posed specific questions based on inquiries received by Commission staff in recent years suggesting that technological developments and related changes in industry standards and practice may affect certain provisions of the Jewelry Guides.

II. Issues and Questions for Discussion at the Roundtable

In response to the 2012 Notice, the Commission received 20 comments addressing a range of issues.[4] Many commenters proposed revisions to

[1] 77 FR 39201 (July 2, 2012).

[2] The Commission issues industry guides to help the industry conduct its affairs in conformity with legal requirements. 16 CFR Part 17. Industry guides are administrative interpretations of the law; they do not have the force of law and are not independently enforceable. Failure to follow industry guides may result, however, in enforcement action under the FTC Act, 15 U.S.C. 45. In any such action, the Commission must prove that the act or practice at issue is unfair or deceptive in violation of Section 5 of the FTC Act.

[3] To ensure that its regulations and guides continue to achieve their intended goals without unduly burdening commerce, the Commission systematically reviews its regulations and guides on a ten-year cycle; *i.e.,* the Commission schedules its reviews ten years after implementation and ten years after the completion of each review. Since completing its last review of the Jewelry Guides in 1996, the Commission revised sections of the Guides and addressed other issues raised in petitions from jewelry trade associations. *See Federal Trade Commission: Guides for the Metallic Watch Band Industry and Guides for the Jewelry Industry: Final guides,* 61 FR 27178 (May 30, 1996); *Federal Trade Commission: Guides for the Jewelry, Precious Metals, and Pewter Industries: Final guides,* 62 FR 16669 (Apr. 8, 1997); *Federal Trade Commission: Guides for the Jewelry, Precious Metals, and Pewter Industries: Revision of the Guides for the Jewelry, Precious Metals, and Pewter Industries,* 64 FR 33193 (June 22, 1999); *Federal Trade Commission: Guides for the Jewelry, Precious Metals, and Pewter Industries: Final guides,* 65 FR 78738 (Dec. 15, 2000); *Federal Trade Commission: Guides for the Jewelry, Precious Metals, and Pewter Industries: Final Guides Amendments,* 75 FR 81443 (Dec. 28, 2010). The Commission therefore scheduled the Guides for another comprehensive review in 2011, but postponed it due to resource constraints. *Federal Trade Commission: Notice Announcing Ten-Year Regulatory Review Schedule and Request for Public Comment on the Federal Trade Commission's Regulatory Review Program,* 76 FR 41150 (Jul. 13, 2011).

[4] Available at *http://www.ftc.gov/os/comments/jewelryguidesreview/index.shtm*. Citations to comments below identify the commenter by name and assigned comment number.

various provisions of the Jewelry Guides, which the Commission is considering as part of its review. Comments in two areas merit further exploration prior to making Commission proposals: (1) The marketing of alloy products containing precious metals in amounts below the Guides' minimum thresholds; and (2) surface applications of precious metals.

A. Marketing of Alloy Products Containing Precious Metals in Amounts Below Minimum Thresholds

The 2012 Notice asked whether the Commission should amend the Jewelry Guides to provide particular guidance on how to describe non-deceptively the content of alloy products that contain precious metals in amounts below the Guides' minimum thresholds. Currently, Section 23.4 provides that it may be misleading to use the word ''gold'' or any abbreviation, or a quality mark implying gold content, to describe all or part of an industry product that is composed throughout of an alloy of gold that is less than 10 karats. Similarly, Section 23.6 provides that it is unfair or deceptive to mark, describe, or otherwise represent all or part of an industry product as ''silver,'' or to use a related abbreviation, unless it is at least 925/1,000ths pure silver. Section 23.7 suggests a minimum of at least 500 parts per thousand pure platinum for use of the word ''platinum'' or related abbreviation to mark or describe an industry product.

Five commenters responded to the Commission's specific questions regarding the marketing of alloy products that contain precious metals in amounts below the Guides' thresholds.[5] These commenters generally concurred that industry members should accurately describe the composition of these products to avoid consumer confusion. As one commenter pointed out, for example, complete and accurate information about a product's composition would allow consumers to make informed purchasing decisions regarding gold alloy jewelry that is not marked with a quality stamp indicating karat fineness (*e.g.,* ''9 karat''), but nonetheless resembles gold jewelry in appearance, feel, and price.[6]

Three commenters recommended revisions that would specify how to describe alloy products containing precious metals below the minimum thresholds.[7] The commenters differed, however, on how this might be accomplished. JTV stated that the Guides should specifically authorize the stamping of karat fineness on a gold alloy containing less than 10 karats, and permit use of the word ''gold'' to describe such a product. JTV further stated that, if the Guides continue to prohibit use of the word ''gold,'' sellers should be allowed to market the alloy under a trade name, as long as the product is stamped with an accurate disclosure of karat fineness.[8] No other commenters recommended allowing quality marks to be stamped on such products.[9]

MJJ and JVC both stated that the Guides should allow industry members to provide complete and accurate descriptions of below-standard alloy products by identifying their actual precious metal content, such as through methods other than stamping. MJJ recommended including an example of non-deceptive markings and descriptions for such products, but did not propose specific language.[10] JVC recommended allowing sellers to indicate in descriptive marketing materials (*e.g.,* advertisements, labels, tags) that a below-standard product contains a precious metal—as long as they accurately disclose the quantity of the metal by percentage.[11] Specifically, JVC proposed a note be added to Sections 23.4 (gold), 23.6 (silver), and 23.7 (platinum group metals) stating that, for products containing less than the minimum standard amounts, sellers may identify the product with the name of the precious metal, but only if it is preceded by the percentage of the precious metal in the product (*e.g.,* ''8% Gold + 4% Palladium,'' ''40% Platinum,'' ''70% Silver + 30% Copper'').[12] JVC argued, however, that sellers should not be allowed to stamp the name of the below-standard precious metal on the product itself (*e.g.,* with a quality mark).[13] The roundtable will help the Commission assess whether JVC's proposal would provide adequate guidance for sellers to avoid consumer deception when marketing below-standard alloy products.

B. Surface Applications of Precious Metals

Four commenters raised issues concerning the surface-layer application of precious metals on jewelry industry products.[14] The current Guides discuss certain aspects of surface applications in Sections 23.4 (gold), 23.5 (vermeil), and 23.6 (silver), but do not comprehensively set specific minimum standards for the use of terms indicating a precious metal application. In some circumstances, the Guides advise that surface-platings be ''of such thickness and extent of surface coverage that reasonable durability is assured,''[15] or that ''all significant surfaces of the product or part contain a plating or coating . . . that is of substantial thickness.''[16] In addition, Section 23.4(c) gives examples reflecting minimum thicknesses and weights for certain terms used to describe surface applications of gold or gold alloy.

According to the commenters, the high price of precious metals has led to an increase in products containing a surface-layer application of precious metal over a less expensive metal. The precious metals used in these surface applications include not only gold and silver, but also platinum, palladium, rhodium, and ruthenium. Commenters stated the lack of standards in the Guides for products with surface applications of a precious metal other than gold or silver creates the risk of deception and confusion. For example, one commenter notes it is common industry practice to apply a surface layer of rhodium (a white precious metal) on gold products that are marketed as white gold; the surface coating is often not disclosed even

[5] MJJ Brilliant Jewelers (MJJ), Comment 560895–00009; Jewelers Ethics Association (JEA), Comment 560895–00013; Jewelers Vigilance Committee (JVC), Comment 560895–00027; Jewelry Television (JTV), Comment 560895–00017; and Wayne Schenk (Schenk), Comment 560895–00008.

[6] MJJ, Comment 560895–00009 at 3.

[7] *See* MJJ, Comment 560895–00009 at 4; JTV, Comment 560895–00017 at 4; JVC, Comment 560895–00027 at 4. In contrast, JEA stated that the current Guides provisions concerning precious metals are clear and concise, and do not require revision. JEA, Comment 560895–00013 at 10.

[8] JTV, Comment 560895–00017 at 4.

[9] Indeed, Schenk expressly opposed any revision that would allow the stamping of alloys containing less than 10 karats of gold with a quality mark implying gold content, and also opposed any revision that would allow the stamping of alloys containing below-standard amounts of silver (other than the stamping of ''coin silver'' on alloys comprising at least 90% silver, as provided in Section 23.6(c) of the Guides). Schenk, Comment 560895–00008 at 3. Similarly, JVC stated that it did not recommend any changes to the minimum standard amounts, and JEA stated that revisions to the Guides' provisions concerning precious metals are not needed. JVC, Comment 560895–00027 at 4; JEA, Comment 560895–00013 at 10.

[10] MJJ, Comment 560895–00009 at 4.

[11] JVC, Comment 560895–00027 at 4.

[12] JVC, Comment 560895–00027 at 20, 39–40.

[13] JVC, Comment 560895–00027 at 20, 39–40.

[14] Sudhir Jadhav (Jadhav), Comment 560895–00011; Jewelers Vigilance Committee (JVC), Comment 560895–00027; Sterling Jewelers Inc./Richline Group, Inc. (Sterling/Richline), Comments 560895–00021 & 560895–00022; and TSI Holding Company (TSI), Comment 560895–00016.

[15] *See* § 23.4(b)(4) (regarding use of the terms ''gold plate'' and ''gold plated'') and § 23.4(b)(5) (regarding use of the terms ''gold filled,'' ''rolled gold plate,'' ''rolled gold plated,'' and ''gold overlay'').

[16] *See* § 23.6(d) (regarding representations that all or part of an industry product is ''plated or coated with silver'').

though it may wear off over time, revealing the underlying yellow or off-white gold. Moreover, products that have insubstantial amounts of precious metal applied over a less expensive metal may be marketed at higher prices than justified.[17]

The commenters generally agreed the Guides should take a unified approach in providing guidance regarding surface applications of precious metals. Among other things, commenters argued such an approach would simplify the nomenclature and standards used, such as by setting explicit minimums (by weight ratio or thickness of coating, depending on the method of application) for common terms. In addition, JVC and Sterling/Richline proposed guidance that would encompass all of the precious metals used in coatings on jewelry products.[18] They also proposed that, if the minimum standards are not met, the Guides should require a disclosure stating that durability of the application is not assured.

The commenters diverged, however, concerning the particulars of the proposed approach. Specifically, commenters disagreed about whether standards for certain gold electrolytic plating applications should be stated in terms of ''fine gold'' (which has a 23.5 karat minimum), without allowing for electrolytic applications of gold alloy (implying the presence of at least 10 karats).[19] Commenters also disagreed on whether, when using the terms ''plate,'' ''plated,'' ''electroplate,'' and ''electroplated'' to describe a product with rhodium surface-plating, the Guides should specify different minimum thickness standards depending on whether the rhodium is applied over a non-white or white metal.[20] In addition, one commenter recommended the deletion of ''overlay'' as a term that may be used to disclose the amount of precious metal in a surface application, whereas another commenter retained this term in its proposal for revising the provisions that concern gold and silver surface applications.[21] Lastly, one commenter recommended the Guides include the term ''over'' in a revised provision regarding use of the terms ''plate,'' ''plated,'' ''electroplate,'' and ''electroplated.'' [22] The Commission will use the public roundtable to evaluate whether any change or additional guidance is necessary to prevent consumer deception and, if so, the level of detail the Commission should include in the Guides.

III. Request for Comments

The Commission's roundtable will address the issues raised by commenters concerning the marketing of below-standard precious metal alloys and precious metal surface applications. The Commission also invites written comments on the questions to be addressed, as outlined below:

1. JVC recommended a revision to the Guides that would allow sellers to indicate in descriptive marketing materials (*e.g.,* advertisements, labels, tags) that a product contains a precious metal in an amount below the standard, as long as they accurately disclose the quantity of the metal by percentage. It also stated that sellers should not be allowed to stamp the name of the below-standard precious metal on the product itself with a quality mark. Does JVC's proposal provide adequate guidance for marketers to avoid consumer deception?

(a) If so, why? If not, why not?

(b) Provide any evidence supporting your position.

2. Would stamping a quality mark on an alloy jewelry product to convey information about its precious metal content be more likely to lead to consumer deception than if such information were included in descriptive marketing materials such as advertisements, labels, and tags?

(a) If so, why? If not, why not?

(b) Provide any evidence supporting your position.

3. Is it sufficient to disclose the precious metal content of an alloy by percentage, or are other disclosures or qualifications necessary to avoid consumer deception?

(a) Why or why not?

(b) Provide any evidence supporting your position.

4. Would consumers fully comprehend the meaning of a gold content disclosure that is stated as a percentage, rather than karats (*e.g.,* ''33% gold'' versus ''8 karats'')?

(a) Provide any evidence supporting your position.

5. Should the Guides address surface-layer applications of precious metals other than gold and silver (*e.g.,* platinum, palladium, iridium, rhodium, ruthenium, or osmium)?

(a) If so, why? What guidance would be necessary to avoid consumer deception?

(b) If not, why not?

(c) Provide any evidence supporting your position.

6. Section 23.4(c)(3) of the Guides states that a marketer can mark or describe a product as ''rolled gold plate,'' without also disclosing as a fraction the portion of the weight of the metal accounted for by the plating in the entire article, when such plating constitutes at least 1/20th of the weight of the metal in the entire article and when the term is appropriately marked with a karat fineness designation. JVC, however, suggested that marketers should be able to describe a product as ''rolled gold plate'' when such plating constitutes at least 1/40th of the weight of the metal in the entire article.

(a) What amount of plating on a product described as ''rolled gold plate'' is necessary to assure reasonable durability of coverage?

(b) How do consumers comprehend the term ''rolled gold plate''?

(c) Provide any evidence supporting your position.

7. Is the term ''rolled plate'' used to describe surface applications of other precious metals, such as silver or platinum group metals?

(a) If so, what amount of plating is necessary to assure reasonable durability of coverage on such products?

(b) Does the amount of plating needed to assure durability differ depending on the metals used?

(c) How do consumers comprehend the term ''rolled plate'' when used to describe surface applications of other precious metals?

[17] JVC, Comment 560895–00027 at 12–13.

[18] Specifically, JVC and Sterling/Richline recommended an approach that expressly covers surface applications of platinum, iridium, palladium, ruthenium, rhodium, and osmium, in addition to gold and silver. JVC, Comment 560895–00027at 13–14; Sterling/Richline, Comments 560895–00021 & 560895–00022 at 2. TSI focused on gold and silver, and did not discuss surface applications of other precious metals. TSI, Comment 560895–00016 at 2–3. Similarly, Jadhav focused solely on the issue of gold plating over silver, without referring to other precious metals. Jadhav, Comment 560895–00011 at 1–2.

[19] Sterling/Richline recommended that all standards for electrolytic plating applications of gold (as reflected in proposed guidance regarding use of the terms ''plate,'' ''plated,'' ''electroplate,'' ''electroplated,'' ''heavy electroplate,'' ''heavy electroplated,'' and ''vermeil'') be stated in terms of ''fine gold;'' similarly, Jadhav recommended that gold plating over sterling silver only be permitted for gold greater than 23 karats. Sterling/Richline, Comments 560895–00021 & 560895–00022 at 1–2; Jadhav, Comment 560895–00011 at 1. By contrast, the JVC proposal provides for electrolytic surface applications of gold alloy. JVC, Comment 560895–00027 attach. at 9.

[20] JVC's proposed guidance provided a minimum thickness of three millionths of an inch. JVC, Comment 560895–00027 attach. at 10. By contrast, Sterling/Richline proposed minimum thickness standards of three millionths of an inch for an application of rhodium over non-white metal, and two millionths of an inch for an application over white metal. Sterling/Richline, Comments 560895–00021 & 560895–00022 at 3.

[21] TSI included ''overlay'' in its recommendations regarding gold and silver surface applications. TSI, Comment 560895–00016 at 2. JVC stated it did not address ''overlay'' in its proposed revisions to the Guides because the term is superfluous. JVC, Comment 560895–00027 at 15.

[22] *See* Sterling/Richline, Comments 560895–00021 & 560895–00022 at 4. No other commenters discussed use of the term ''over.''

(d) Provide any evidence supporting your position.

8. The current Guides do not address the term ''bonded.'' JVC stated this term ''indicates a durable product with a mechanically applied application of gold or gold alloy over a base of sterling silver that is at least 1/40th of the weight of the article,'' and proposed that use of the term also be permitted for surface applications of precious metals other than gold.

(a) Is the term ''bonded'' used to describe surface applications of other precious metals, such as silver or platinum group metals?

(b) What amount of plating on a product described as ''bonded'' is necessary to assure reasonable durability of coverage?

(c) Does the amount of plating needed to assure durability differ depending on the metals used? If so, how does it differ?

(d) How do consumers comprehend the term ''bonded''?

(e) Provide any evidence supporting your position.

9. The current Guides do not address the term ''clad.'' JVC recommended marketers state a product is ''[precious metal] clad'' when the applied precious metal is at least 1/20th of the weight of the article.

(a) What amount of plating on a product described as ''clad'' is necessary to assure reasonable durability of coverage?

(b) Does the amount of plating needed to assure durability differ depending on the metals used? If so, how does it differ?

(c) How do consumers comprehend the term ''clad''?

(d) Provide any evidence supporting your position.

10. Should the Guides continue to provide guidance on use of the terms ''flashed,'' ''washed,'' ''overlay,'' ''Duragold,'' ''Diragold,'' ''Noblegold,'' ''Goldine,'' or ''layered gold''?

(a) If so, why? If not, why not?

(b) How do consumers comprehend these terms?

(c) Provide any evidence supporting your position.

11. Sterling/Richline suggested that standards for certain terms used to describe gold electrolytic plating applications (''plate,'' ''plated,'' ''electroplate,'' ''electroplated,'' ''heavy electroplate,'' ''heavy electroplated,'' and ''vermeil'') should be stated in terms of ''fine gold,'' which has a 23.5 karat minimum. Do the current Guides provisions regarding these terms, which refer to platings or coatings of ''gold'' or ''gold alloy of not less than 10 karat fineness'' create consumer confusion or cause consumer injury?

(a) If so, how? What is the injury to consumers?

(b) Provide any evidence supporting your position.

12. Should the Guides advise marketers to disclose that the durability of a surface application of precious metal is not assured if suggested thickness or weight minimums are not met?

(a) If so, why? If not, why not?

(b) Would the issuance of guidance calling for such disclosure affect the costs and benefits of the Guides for consumers and businesses, particularly small businesses? If so, how?

(c) Provide any evidence supporting your position.

13. To the extent not addressed in your previous answers, please explain whether and how the Commission should revise the Guides to prevent consumer deception with respect to the marketing and sale of jewelry industry products that have a surface-layer application of precious metal.

Instructions for Filing Public Comments

You can file a comment online or on paper. For the Commission to consider your comment, we must receive it on or before June 5, 2013. Write ''Jewelry Guides Roundtable, 16 CFR Part 23, Project No. G711001'' on your comment. Your comment—including your name and your state—will be placed on the public record of this proceeding, including, to the extent practicable, on the public Commission Web site, at *http://www.ftc.gov/os/publiccomments.shtm.* As a matter of discretion, the Commission tries to remove individuals' home contact information from comments before placing them on the Commission Web site. Because your comment will be made public, you are solely responsible for making sure your comment does not include any sensitive personal information, such as anyone's Social Security number, date of birth, driver's license number or other state identification number or foreign country equivalent, passport number, financial account number, or credit or debit card number. You are also solely responsible for making sure your comment does not include any sensitive health information, such as medical records or other individually-identifiable health information. In addition, do not include any ''trade secret or any commercial or financial information which is obtained from any person and which is privileged or confidential,'' as provided in Section 6(f) of the FTC Act, 15 U.S.C. 46(f), and FTC Rule 4.10(a)(2), 16 CFR 4.10(a)(2). In particular, do not include competitively sensitive information such as costs, sales statistics, inventories, formulas, patterns, devices, manufacturing processes, or customer names.

If you want the Commission to give your comment confidential treatment, you must file it in paper form, with a request for confidential treatment, and you must follow the procedure explained in FTC Rule 4.9(c), 16 CFR 4.9(c).[23] Your comment will be kept confidential only if the FTC General Counsel, in his or her sole discretion, grants your request in accordance with the law and the public interest.

Postal mail addressed to the Commission is subject to delay due to heightened security screening. Accordingly, we encourage you to submit your comments online. To make sure that the Commission considers your online comment, you must file it at *https://ftcpublic.commentworks.com/ftc/jewelryguidesroundtable* by following the instructions on the web-based form. If this Notice appears at *http://www.regulations.gov,* you also may file a comment through that Web site.

If you file your comment on paper, write ''Jewelry Guides Roundtable, 16 CFR Part 23, Project No. G711001'' on your comment and on the envelope, and mail or deliver it to the following address: Federal Trade Commission, Office of the Secretary, Room H–113 (Annex O), 600 Pennsylvania Avenue NW., Washington, DC 20580. If possible, submit your paper comment to the Commission by courier or overnight service.

Visit the Commission Web site at *http://www.ftc.gov* to read this Notice and the news release describing it. The FTC Act and other laws that the Commission administers permit the collection of public comments to consider and use in this proceeding as appropriate. The Commission will consider all timely and responsive public comments that it receives on or before June 5, 2013. You can find more information, including routine uses permitted by the Privacy Act, in the Commission's privacy policy at *http://www.ftc.gov/ftc/privacy.htm.*

By direction of the Commission.

Donald S. Clark,

Secretary.

[FR Doc. 2013–10580 Filed 5–3–13; 8:45 am]

BILLING CODE 6750–01–P

[23] In particular, the written request for confidential treatment that accompanies the comment must include the factual and legal basis for the request and must identify the specific portions of the comment to be withheld from the public record. *See* FTC Rule 4.9(c), 16 CFR 4.9(c).

DEPARTMENT OF HOMELAND SECURITY

Coast Guard

33 CFR Part 165

[Docket No. USCG–2013–0103]

RIN 1625–AA00

Safety Zones; Annual Events in the Captain of the Port Detroit Zone

AGENCY: Coast Guard, DHS.

ACTION: Notice of proposed rulemaking.

SUMMARY: The Coast Guard proposes to amend the list of safety zones for annual events in the Captain of the Port Detroit Zone. This proposed rule is intended to amend the rules that restrict vessels from portions of water areas during events that pose a hazard to public safety. Specifically, this rule proposes to add seven new safety zones and revise the locations of fifteen safety zones. The permanent safety zones established by this proposed rule are necessary to protect spectators, participants, and vessels from the hazards associated with fireworks displays, and other events.

DATES: Comments and related materials must be received by the Coast Guard on or before June 5, 2013.

ADDRESSES: You may submit comments identified by docket number USCG–2013–0103 using any one of the following methods:

(1) *Federal eRulemaking Portal: http://www.regulations.gov.*

(2) *Fax:* 202–493–2251.

(3) *Mail:* Docket Management Facility (M–30), U.S. Department of Transportation, West Building Ground Floor, Room W12–140, 1200 New Jersey Avenue SE., Washington, DC 20590–0001.

(4) *Hand delivery:* Same as mail address above, between 9 a.m. and 5 p.m., Monday through Friday, except Federal holidays. The telephone number is 202–366–9329.

To avoid duplication, please use only one of these four methods. See the ''Public Participation and Request for Comments'' portion of the **SUPPLEMENTARY INFORMATION** section below for instructions on submitting comments.

FOR FURTHER INFORMATION CONTACT: If you have questions on this proposed rule, call or email LT Adrian Palomeque, Waterways Management Division, Sector Detroit, Coast Guard; telephone (313) 568–9508, email *Adrian.F.Palomeque@uscg.mil.* If you have questions on viewing or submitting material to the docket, call Barbara Hairston, Program Manager, Docket Operations, telephone 202–366–9826.

SUPPLEMENTARY INFORMATION:

Table of Acronyms

DHS Department of Homeland Security
FR Federal Register
NPRM Notice of Proposed Rulemaking
TFR Temporary Final Rule

A. Public Participation and Request for Comments

We encourage you to participate in this rulemaking by submitting comments and related materials. All comments received will be posted without change to *http://www.regulations.gov* and will include any personal information you have provided.

1. Submitting Comments

If you submit a comment, please include the docket number for this rulemaking (USCG–2013–0103), indicate the specific section of this document to which each comment applies, and provide a reason for each suggestion or recommendation. You may submit your comments and material online (via *http://www.regulations.gov*) or by fax, mail or hand delivery, but please use only one of these means. If you submit a comment online via *www.regulations.gov*, it will be considered received by the Coast Guard when the comment is successfully transmitted. If you submit a comment via fax, hand delivery, or mail, it will be considered as having been received by the Coast Guard when the comment is received at the Docket Management Facility. We recommend that you include your name and a mailing address, an email address, or a telephone number in the body of your document so that we can contact you if we have questions regarding your submission.

To submit your comment online, go to *http://www.regulations.gov*, type the docket number USCG–2013–0103 in the ''SEARCH'' box and click ''SEARCH.'' Click on ''Submit a Comment'' on the line associated with this rulemaking.

If you submit your comments by mail or hand delivery, submit them in an unbound format, no larger than 8½ by 11 inches, suitable for copying and electronic filing. If you submit comments by mail and would like to know that they reached the Facility, please enclose a stamped, self-addressed postcard or envelope. We will consider all comments and material received during the comment period and may change the rule based on your comments.

2. Viewing Comments and Documents

To view comments, as well as documents mentioned in this preamble as being available in the docket, go to *http://www.regulations.gov*, type the docket number USCG–2013–0103 in the ''SEARCH'' box and click ''SEARCH.'' Click on Open Docket Folder on the line associated with this rulemaking. You may also visit the Docket Management Facility in Room W12–140 on the ground floor of the Department of Transportation West Building, 1200 New Jersey Avenue SE., Washington, DC 20590, between 9 a.m. and 5 p.m., Monday through Friday, except Federal holidays.

3. Privacy Act

Anyone can search the electronic form of comments received into any of our dockets by the name of the individual submitting the comment (or signing the comment, if submitted on behalf of an association, business, labor union, etc.). You may review a Privacy Act notice regarding our public dockets in the January 17, 2008, issue of the **Federal Register** (73 FR 3316).

4. Public Meeting

We do not now plan to hold a public meeting, but you may submit a request for one using one of the four methods specified under **ADDRESSES**. Please explain why you believe a public meeting would be beneficial. If we determine that one would aid this rulemaking, we will hold one at a time and place announced by a later notice in the **Federal Register**.

B. Regulatory History and Information

On August 8, 2008, the Coast Guard put into effect 33 CFR 165.941, which established several permanent safety zones within U.S. waters under the jurisdiction of the Captain of the Port Detroit (73 FR 46194). Specifically, forty-nine permanent safety zones were established at that time. Almost two years later, on June 9, 2010, the Coast Guard amended 33 CFR 165.941, permanently adding several safety zones, which brought the total to fifty-six (75 FR 32668). The Coast Guard amended 33 CFR 165.941 a third time on July 18, 2012, bringing the total permanent safety zones to fifty-nine (77 FR 42176). On the whole, these fifty-nine safety zones were permanently put in place over time to protect the boating public from hazards associated with certain annually recurring maritime events that take place on U.S. navigable waterways.

As in years past, the Coast Guard recently inventoried the maritime events that occur on waters under the jurisdiction of the Captain of the Port Detroit. As a result of that inventory, the Coast Guard proposes to add seven new safety zones to 33 CFR 165.941, which will bring the total to sixty-six. Each of the safety zones proposed to be added have previously been established and enforced by the Coast Guard via separate TFRs. All but one of those seven TFRs, the safety zone associated with the Port Huron Blue Water Festival, were published previously in the **Federal Register** (E.g., 76 FR 41691, 77 FR 32394, 77 FR 50923, and 77 FR 62440).

C. Basis and Purpose

As stated above, 33 CFR 165.941 currently lists fifty-nine permanent safety zones located within the Captain of the Port Detroit Zone. Each of these safety zones corresponds to an annually recurring maritime event. As also mentioned above, a review of the maritime events that take place annually within the Detroit Captain of the Port Zone recently revealed that seven recurring events require that seven safety zones be permanently added to 33 CFR 165.941. Specifically, the Captain of the Port has determined that three fireworks events, two triathlon sporting events, one pumpkin launching benefit event, and one cannonade event require a permanent safety zone in 33 CFR 165.941. Each of these seven events recurs once per year, typically during the same month and week. However, the exact date and time of each of event differs each year.

The Captain of the Port believes these seven proposed safety zones are necessary to protect vessels and people from the hazards associated with each corresponding event. Such hazards include obstructions to the waterway, the explosive dangers of fireworks, premature and accidental detonations, dangerous projectiles, falling or burning debris, and flying cannon balls. Each of these hazards poses a significant risk to public safety and property. Accordingly, pursuant to the authority contained in 33 U.S.C. 1231, the Captain of the Port Detroit proposes to add seven new safety zones.

In addition to revealing the need for seven new additional safety zones, the recent review of the recurring maritime events within the Captain of the Port Detroit Zone also revealed the need to revise the location descriptions of fifteen safety zones already established in 33 CFR 165.941. These changes are necessary to better align the location of each safety zone with the planned location of each maritime event as recently communicated to the Coast Guard by event organizers.

D. Discussion of Proposed Rule

For all of the above reasons, the Captain of the Port Detroit proposes to permanently establish seven safety zones in 33 CFR 165.941 to ensure the safety of vessels and people during each associated annual event. Specifically, the Captain of the Port Detroit proposes to establish the following safety zones:

(1) *3 Disciplines Triathlon, Lake Erie, Monroe, MI:* This safety zone will encompass all navigable waters of Lake Erie, Monroe, MI bound by a line beginning onshore at 41°54′14″ N; 083°20′01″ W to 41°54′13″ N; 083°19′48″ W to 41°54′50″ N; 083°19′39″ W to 41°54′51″ N; 083°19′52″ W, and from thence along the shoreline to the beginning (NAD 83). It will be enforced one morning during a weekend in June. The exact dates and times will be determined annually.

(2) *BGSU Football Gridiron Classic Golf and Dinner Fireworks, Catawba Island, OH:* This safety zone will encompass all waters of Lake Erie within a 75-yard radius of the fireworks launch site located at position 41°34′18″ N, 082°51′18″ W (NAD 83). This safety zone will be enforced one evening in July. The exact dates and times will be determined annually.

(3) *Jet Express Triathlon, Sandusky Bay, Lake Erie, Lakeside, OH:* This safety zone will encompass all waters of Lake Erie within a direct line from 41°33′49″ N 082°47′8″ W to 41°33′25″ N 082°48′8″ W and 15 yards on either side of direct line. All geographic coordinates are North American Datum of 1983 (NAD 83). This safety zone will be enforced one morning during a weekend in September. The exact dates and times will be determined annually.

(4) *Wounded Warriors Benefit, East Huron, OH:* This safety zone will encompass all waters of Lake Erie within a 2500 ft radius of the pumpkin launch site located at position 41°23′6.7194″ N, 082°27′46.6812″ W. All geographic coordinates are North American Datum of 1983 (NAD 83). This safety zone will be enforced one day on the third or fourth weekend of October. The exact dates and times will be determined annually.

(5) *Detroit Symphony Orchestra Fireworks at the Ford House; Grosse Pointe, MI:* This safety zone will encompass all waters of Lake St. Clair, Grosse Pointe Shores, MI within a 600 foot radius of position 42° 27′15″ N and 082° 51′56″ W (NAD 83). This safety zone will be enforced one evening during the first two weeks in July. The exact dates and times will be determined annually.

(6) *Blue Water Festival Fireworks, Port Huron, MI:* This safety zone will encompass all the waters of the St. Clair River, Port Huron, MI within a 500 foot radius of position 42° 57′55″ N and 082° 25′19″ W (NAD 83). This safety zone will be enforced one evening during the first two weeks in July. The exact dates and times will be determined annually.

(7) *Cannonade; Harsens Island, MI:* This safety zone will encompass all waters of Lake St. Clair, Muscamoot Bay, Harsens Island, MI within an area bound by the coordinates starting at the cannon firing position located at 42°32.5′ N, 082°40.1′ W extending west to the Old Channel Light located at position 42°32.5′ N, 082°41.6′ W angling northeast to position 42°33.5″ N, 082°40.6′ W then angling southeast to the point of origin (NAD 83). This safety zone will be enforced one afternoon during the first or second weekend of October.

As alluded to above, this proposed rule will also update the coordinates for fifteen safety zones already established in 33 CFR 165.941. These safety zones are associated with the Put-in-Bay Fourth of July Fireworks in Put-In-Bay, OH; the Toledo Country Club Memorial Celebration and Fireworks in Toledo, OH; the Toledo Country Club 4th of July Fireworks in Toledo, OH; the Pharm Lights Up The Night Fireworks in Toledo, OH; the Red, White and Blues Bang Fireworks in Huron, OH; the Huron Riverfest Fireworks in Huron, OH; the Riverfest at the International Docks in Toledo, OH; the Port Austin Fireworks in Port Austin, MI; the Grosse Pointe Yacht Club 4th of July Fireworks in Grosse Pointe Shores, MI; the Grosse Ile Yacht Club Fireworks in Grosse Ile, MI; the Trenton Fireworks in Trenton, MI; the Belle Maer Harbor 4th of July Fireworks in Harrison Township, MI; the Bay City Fireworks Festival in Bay City, MI; the Catawba Island Club Fireworks in Catawba Island, OH; and the Bay Point Fireworks Display in Marblehead, OH.

Although this proposed rule will remain in effect year round, the safety zones within it will be enforced only immediately before, during, and after events that pose hazard to the public, and only upon notice by the Captain of the Port. The Captain of the Port Detroit will use all appropriate means to notify the public when the safety zones in this proposal will be enforced. Consistent with 33 CFR 165.7(a), such means of may include, among other things, publication in the **Federal Register**, Broadcast Notice to Mariners, Local Notice to Mariners, or, upon request, by

facsimile (fax). Also, the Captain of the Port may issue a Broadcast Notice to Mariners notifying the public if enforcement of a safety zone in this section is cancelled prematurely.

Entry into, transiting, or anchoring within one of these proposed safety zones during an enforcement period is prohibited unless authorized by the Captain of the Port Detroit or his designated representative. The Captain of the Port or his designated representative may be contacted via VHF Channel 16.

E. Regulatory Analyses

We developed this proposed rule after considering numerous statutes and executive orders related to rulemaking. Below we summarize our analyses based on these statutes and executive orders.

1. Regulatory Planning and Review

This proposed rule is not a significant regulatory action under section 3(f) of Executive Order 12866, Regulatory Planning and Review, and does not require an assessment of potential costs and benefits under section 6(a)(3) of that Order. The Office of Management and Budget has not reviewed it under that Order. It is not ''significant'' under the regulatory policies and procedures of the Department of Homeland Security (DHS). We conclude that this proposed rule is not a significant regulatory action because we anticipate that it will have minimal impact on the economy, will not interfere with other agencies, will not adversely alter the budget of any grant or loan recipients, and will not raise any novel legal or policy issues. The safety zones established by this proposed rule will be relatively small and enforced for relatively short times. Also, each safety zone is designed to minimize its impact on navigable waters. Furthermore, each safety zone has been designed to allow vessels to transit unrestricted to portions of the waterways not affected by the safety zones. Thus, restrictions on vessel movements within any particular area are expected to be minimal. Under certain conditions, moreover, vessels may still transit through each safety zone when permitted by the Captain of the Port. On the whole, the Coast Guard expects insignificant adverse impact to mariners from the activation of these safety zones.

2. Impact on Small Entities

Under the Regulatory Flexibility Act (5 U.S.C. 601–612), we have considered whether this proposed rule would have a significant economic impact on a substantial number of small entities. The term ''small entities'' comprises small businesses, not-for-profit organizations that are independently owned and operated and are not dominant in their fields, and governmental jurisdictions with populations of less than 50,000.

The Coast Guard certifies under 5 U.S.C. 605(b) that this proposed rule would not have a significant economic impact on a substantial number of small entities.

This proposed rule would affect the following entities, some of which might be small entities: The owners and operators of vessels intending to transit or anchor in the areas designated as safety zones during the dates and times the safety zones are being enforced.

These proposed safety zones will not have a significant economic impact on a substantial number of small entities for all of the reasons discussed in the above Regulatory Planning and Review section. If you think that your business, organization, or governmental jurisdiction qualifies as a small entity and that this proposed rule would have a significant economic impact on it, please submit a comment (see **ADDRESSES**) explaining why you think it qualifies and how and to what degree this rule would economically affect it.

3. Assistance for Small Entities

Under section 213(a) of the Small Business Regulatory Enforcement Fairness Act of 1996 (Pub. L. 104–121), we want to assist small entities in understanding this proposed rule so that they can better evaluate its effects on them and participate in the rulemaking process. If this proposed rule would affect your small business, organization, or governmental jurisdiction and you have questions concerning its provisions or options for compliance, please contact the person listed in the **FOR FURTHER INFORMATION CONTACT**, above. The Coast Guard will not retaliate against small entities that question or complain about this proposed rule or any policy or action of the Coast Guard.

4. Collection of Information

This proposed rule would call for no new collection of information under the Paperwork Reduction Act of 1995 (44 U.S.C. 3501–3520).

5. Federalism

A rule has implications for federalism under Executive Order 13132, Federalism, if it has a substantial direct effect on State or local governments and would either preempt State law or impose a substantial direct cost of compliance on them. We have analyzed this proposed rule under that Order and have determined that it does not have implications for federalism.

6. Unfunded Mandates Reform Act

The Unfunded Mandates Reform Act of 1995 (2 U.S.C. 1531–1538) requires Federal agencies to assess the effects of their discretionary regulatory actions. In particular, the Act addresses actions that may result in the expenditure by a State, local, or tribal government, in the aggregate, or by the private sector of $100,000,000 (adjusted for inflation) or more in any one year. Though this proposed rule would not result in such an expenditure, we do discuss the effects of this proposed rule elsewhere in this preamble.

7. Taking of Private Property

This proposed rule would not affect a taking of private property or otherwise have taking implications under Executive Order 12630, Governmental Actions and Interference with Constitutionally Protected Property Rights.

8. Civil Justice Reform

This proposed rule meets applicable standards in sections 3(a) and 3(b)(2) of Executive Order 12988, Civil Justice Reform, to minimize litigation, eliminate ambiguity, and reduce burden.

9. Protection of Children

We have analyzed this proposed rule under Executive Order 13045, Protection of Children from Environmental Health Risks and Safety Risks. This proposed rule is not an economically significant rule and would not create an environmental risk to health or risk to safety that might disproportionately affect children.

10. Indian Tribal Governments

This proposed rule does not have tribal implications under Executive Order 13175, Consultation and Coordination with Indian Tribal Governments, because it does not have a substantial direct effect on one or more Indian tribes, on the relationship between the Federal Government and Indian tribes, or on the distribution of power and responsibilities between the Federal Government and Indian tribes.

11. Energy Effects

This proposed rule is not a ''significant energy action'' under Executive Order 13211, Actions Concerning Regulations That Significantly Affect Energy Supply, Distribution, or Use.

12. Technical Standards

This proposed rule does not use technical standards. Therefore, we did not consider the use of voluntary consensus standards.

13. Environment

We have analyzed this proposed rule under Department of Homeland Security Management Directive 023–01 and Commandant Instruction M16475.lD, which guide the Coast Guard in complying with the National Environmental Policy Act of 1969 (NEPA) (42 U.S.C. 4321–4370f), and have made a preliminary determination that this action is one of a category of actions which do not individually or cumulatively have a significant effect on the human environment. This proposed rule involves the establishment of safety zones and thus, is categorically excluded under paragraph (34)(g) of the Instruction. A preliminary environmental analysis checklist supporting this determination is available in the docket where indicated under **ADDRESSES**. We seek any comments or information that may lead to the discovery of a significant environmental impact from this proposed rule.

List of Subjects in 33 CFR Part 165

Harbors, Marine safety, Navigation (water), Reporting and record keeping requirements, Security measures, Waterways.

For the reasons discussed in the preamble, the Coast Guard proposes to amend 33 CFR part 165 as follows:

PART 165—REGULATED NAVIGATION AREAS AND LIMITED ACCESS AREAS

■ 1. The authority citation for part 165 continues to read as follows:

Authority: 33 U.S.C. 1231; 46 U.S.C. Chapters 701, 3306, 3703; 50 U.S.C. 191, 195; 33 CFR 1.05–1, 6.04–1, 6.04–6, and 160.5; Pub. L. 107–295, 116 Stat. 2064; Department of Homeland Security Delegation No. 0170.1.

■ 2. Revise § 165.941 to read as follows:

§ 165.941 Safety Zones; Annual Events in the Captain of the Port Detroit Zone.

(a) *Safety Zones.* The following areas are designated Safety zones:

(1) *Roostertail Fireworks (barge), Detroit, MI:*

(i) *Location:* All waters of the Detroit River within a 300-foot radius of the fireworks launch site located at position 42°21′16.67″ N, 082°58′20.41″ W. (NAD 83). This area is located between Detroit and Belle Isle near the Roostertail restaurant.

(ii) *Enforcement Date and Time:* One evening during the third week in July. The exact dates and times for this event will be determined annually.

(2) *Washington Township Summerfest Fireworks, Toledo, OH:*

(i) *Location:* All waters of the Ottawa River within a 600-foot radius of the fireworks launch site located at position 41°43′29″ N, 083°28′47″ W (NAD 83). This area is located at the Fred C. Young Bridge, Toledo, OH.

(ii) *Enforcement Date and Time:* One evening during the last week in June or the first week in July. The exact dates and times for this event will be determined annually.

(3) *Au Gres City Fireworks, Au Gres, MI:*

(i) Location: All waters of Saginaw Bay within a 700-foot radius of the fireworks launch site located at position 44°1.4′ N, 083°40.4′ W (NAD 83). This area is located at the end of the pier near the end of Riverside Drive in Au Gres, MI.

(ii) *Enforcement Date and Time:* One evening during the last week in June or the first week in July. The exact dates and times for this event will be determined annually.

(4) *The Old Club Fireworks, Harsens Island, MI:*

(i) *Location:* All waters of Lake St. Clair within an 850-foot radius of the fireworks launch site located at position 42°32.4′ N, 082°40.1′ W (NAD 83). This area is located near the southern end of Harsens Island, MI.

(ii) *Enforcement Date and Time:* One evening during the last week of June or the first week of July. The exact dates and times for this event will be determined annually.

(5) *Put-In-Bay Fourth of July Fireworks, Put-In-Bay, OH:*

(i) *Location:* All waters of Lake Erie within a 1,000-foot radius of the fireworks launch site located at position 41°39′28.92″ N, 082°48′52.98″ W (NAD 83). This area is located in Put-In-Bay Harbor.

(ii) *Enforcement Date and Time:* One evening during the first week of July. The exact dates and times for this event will be determined annually.

(6) *Gatzeros Fireworks, Grosse Pointe Park, MI:*

(i) *Location.* All waters of Lake St. Clair within a 300-foot radius of the fireworks launch site located at position 42°22.6′ N, 082°54.8′ W (NAD 83). This area is located near Grosse Pointe Park, MI.

(ii) *Enforcement Date and Time:* One evening during the first week in July. The exact dates and times for this event will be determined annually.

(7) *Harrisville Fireworks, Harrisville, MI—*

(i) *Location.* All waters of Lake Huron within a 450-foot radius of the fireworks launch site located at position 44°39.7′ N, 083°17.0′ W (NAD 83). This area is located at the end of the break wall at the Harrisville harbor in Harrisville, MI.

(ii) *Enforcement Date and Time.* One evening during the first week in July. The exact dates and times for this event will be determined annually.

(8) *Harbor Beach Fireworks, Harbor Beach, MI—*

(i) *Location.* All waters of Lake Huron within a 700-foot radius of the fireworks launch site located at position 43°50.8′ N, 082°38.6′ W (NAD 83). This area is located at the end of the railroad pier east of the end of State Street in Harbor Beach, MI.

(ii) *Enforcement Date and Time.* One evening during the second week in July. The exact dates and times for this event will be determined annually.

(9) *Trenton Rotary Roar on the River Fireworks, Trenton, MI—*

(i) *Location.* All waters of the Detroit River within a 420-foot radius of the fireworks launch site located at position 42°7.8′ N, 083°10.4′ W (NAD 83). This area is located between Grosse Ile and Elizabeth Park in Trenton, MI.

(ii) *Enforcement Date and Time.* One evening during the third week in July. The exact dates and times for this event will be determined annually.

(10) *Nautical Mile Venetian Festival Fireworks, St. Clair Shores, MI—*

(i) *Location.* All waters of Lake St. Clair within a 210-foot radius of the fireworks launch site located at position 42°28.2′ N, 082°52.5′ W (NAD 83). This area is located near Jefferson Beach Marina in St. Clair Shores, MI.

(ii) *Enforcement Date and Time.* One evening during the second week in August. The exact dates and times for this event will be determined annually.

(11) *Cheeseburger Festival Fireworks, Caseville, MI—*

(i) *Location.* All waters of Lake Huron within a 300-foot radius of the fireworks launch site located at position 43°56.9′ N, 083°17.2′ W (NAD 83). This area is located near the break wall located at Caseville County Park, Caseville, MI.

(ii) *Enforcement Date and Time.* One evening during the second week in August. The exact dates and times for this event will be determined annually.

(12) *Detroit International Jazz Festival Fireworks, Detroit, MI—*

(i) *Location.* All waters of the Detroit River within a 560-foot radius of the fireworks launch site located at position 42°19.6′ N, 83°2.6′ W (NAD 83). This area is located in the Detroit River between Cobo Hall and the GM Headquarters in Detroit, MI.

(ii) *Enforcement Date and Time.* One evening during the last week in August or the first week in September. The

exact dates and times for this event will be determined annually.

(13) *Marine City Maritime Festival Fireworks, Marine City, MI—*

(i) *Location.* All waters of the St. Clair River within an 840-foot radius of the fireworks launch site located at position 42°42.9′ N, 082°29.1′ W (NAD 83). This area is located east of Marine City.

(ii) *Enforcement Date and Time.* One evening during the third week in September. The exact dates and times for this event will be determined annually.

(14) *Schoenith Family Foundation Fireworks, Detroit, MI—*

(i) *Location.* All waters of the Detroit River, within a 210-foot radius of the fireworks launch site located at position 42°21.2′ N, 82°58.4′ W. (NAD 83). This area is located between Detroit and Belle Isle.

(ii) *Enforcement Date and Time.* One evening during the third week in September. The exact dates and times for this event will be determined annually.

(15) *Toledo Country Club Memorial Celebration and Fireworks, Toledo, OH—*

(i) *Location.* All waters of the Maumee River, within a 250-yard radius of the fireworks launch site located on shore at position 41°35′51.0″ N, 83 °35′36.5″ W. (NAD 83). This area is located at the Toledo Country Club's 18th Green and encompasses the fireworks launch site.

(ii) *Enforcement Date and Time.* One evening during the last week in May. The exact dates and times for this event will be determined annually.

(16) *Luna Pier Fireworks Show, Luna Pier, MI—*

(i) *Location.* All waters of Lake Erie, within a 300-yard radius of the fireworks launch site located at position 41°48′32″ N, 83°26′23″ W. (NAD 83). This area is located at the Clyde E. Evens Municipal Pier.

(ii) *Enforcement Date and Time.* One evening during the first week in July. The exact dates and times for this event will be determined annually.

(17) *Toledo Country Club 4th of July Fireworks, Toledo, OH—*

(i) *Location.* All waters of the Maumee River, within a 250 yard radius of the fireworks launch site located on shore at position 41°35′51.0″ N, 83°35′36.5″ W. (NAD 83). This area is located at the Toledo Country Club's 18th Green and encompasses the fireworks launch site.

(ii) *Enforcement Date and Time.* One evening during the first week in July. The exact dates and times for this event will be determined annually.

(18) *Pharm Lights Up The Night Fireworks, Toledo, OH—*

(i) *Location.* All waters of the Maumee River, within a 300-yard radius of the fireworks launch site located at position 41°38′35″ N, 83°31′54″ W. (NAD 83).

(ii) *Enforcement Date and Time.* One evening during the first or second weeks in July. The exact dates and times for this event will be determined annually.

(19) *Perrysburg/Maumee 4th of July Fireworks, Perrysburg, OH—*

(i) *Location.* All waters of the Maumee River, within an 850-foot radius of the fireworks launch site located at position 41°33′27″ N, 83°38′59″ W. (NAD 83). This position is located at the Perrysburg/Maumee Hwy 20 Bridge.

(ii) *Enforcement Date and Time.* One evening during the first week in July. The exact dates and times for this event will be determined annually.

(20) *Lakeside July 4th Fireworks, Lakeside, OH—*

(i) *Location.* All waters of Lake Erie, within a 560-foot radius of the fireworks launch site located at position 41°32′52″ N, 82°45′03″ W. (NAD 83). This position is located at the Lakeside Association Dock.

(ii) *Enforcement Date and Time.* One evening during the first week in July. The exact dates and times for this event will be determined annually.

(21) *Catawba Island Club Fireworks, Catawba Island, OH—*

(i) *Location.* All waters of Lake Erie, within a 300-yard radius of the fireworks launch site located at position 41°34′20″ N, 82°51′18″ W. (NAD 83). This position is located at the northwest end of the Catawba Cliffs Harbor Light Pier.

(ii) *Enforcement Date and Time.* One evening during the first week in July. The exact dates and times for this event will be determined annually.

(22) *Red, White and Blues Bang Fireworks, Huron, OH—*

(i) *Location.* All waters of the Huron River, within a 300-yard radius of the fireworks launch site located at position 41°23′31.81″ N, 82°33′05.69″ W. (NAD 83). This position is located at the Huron Ore Docks in Huron, OH.

(ii) *Enforcement Date and Time.* One evening during the first week in July. The exact dates and times for this event will be determined annually.

(23) *Huron Riverfest Fireworks, Huron, OH—*

(i) *Location.* All waters of Huron Harbor, within a 350-foot radius of the fireworks launch site located at the Huron Ore Docks at position 41°23′31.81″ N, 82°33′05.69″ W. (NAD 83).

(ii) *Enforcement Date and Time.* One evening during the second week in July. The exact dates and times for this event will be determined annually.

(24) *Kelleys Island, Island Fest Fireworks, Kelleys Island, OH:*

(i) *Location.* All waters of Lake Erie, within a 300-yard radius of the fireworks launch site located at position 41°35′43″ N, 82°43′30″ W. (NAD 83). This position is located at the old Neuman Boat Line Dock.

(ii) *Enforcement Date and Time.* One evening during the third or fourth weeks in July. The exact dates and times for this event will be determined annually.

(25) *Riverfest at the International Docks, Toledo, OH—*

(i) *Location.* All waters of the Maumee River, starting at position 41°38′35″ N, 83°31′54″ W, then north/north-east to the south end of the City of Toledo Division of Streets, Harbors and Bridges building at 41°38′51″ N, 83°31′50″ W, then south-west to the red nun buoy #64 at 41°38′48″ N, 83°31′58″ W, then back to the point (NAD 83).

(ii) *Enforcement Date and Time.* One evening during the first week in September. The exact dates and times for this event will be determined annually.

(26) *Rossford Labor Day Fireworks, Rossford, OH—*

(i) *Location.* All waters of the Maumee River, within a 350-yard radius of the fireworks launch site located at position 41°36′58″ N, 83°33′56″ W. (NAD 83). This position is located at Veterans Memorial Park.

(ii) *Enforcement Date and Time.* One evening during the first week in September. The exact dates and times for this event will be determined annually.

(27) *Lakeside Labor Day Fireworks, Lakeside, OH—*

(i) *Location.* All waters of Lake Erie, within a 560-foot radius of the fireworks launch site located at position 41°32′52″ N, 82°45′03″ W. (NAD 83). This position is located at the Lakeside Association Dock.

(ii) *Enforcement Date and Time.* One evening during the first week in September. The exact dates and times for this event will be determined annually.

(28) *Catawba Island Club Fireworks, Catawba Island, OH—*

(i) *Location.* All waters of Lake Erie, within a 300-yard radius of the fireworks launch site located at position 41°34′20″ N, 82°51′18″ W. (NAD 83). This position is located at the northwest end of the Catawba Cliffs Harbor Light Pier.

(ii) *Enforcement Date and Time.* One evening during the first week in September. The exact dates and times for this event will be determined annually.

(29) *Bay-Rama Fishfly Festival Fireworks, New Baltimore, MI—*

(i) *Location.* All waters of Lake St. Clair-Anchor Bay, off New Baltimore City Park, within a 300-yard radius of the fireworks launch site located at position 42°41′ N, 082°44′ W (NAD 83).

(ii) *Enforcement Date and Time.* One evening during the first week in June. The exact dates and times for this event will be determined annually.

(30) *Lake Erie Metropark Fireworks, Gibraltar, MI—*

(i) *Location.* All waters of Lake Erie, off Lake Erie Metro Park, within a 300-yard radius of the fireworks launch site located at position 42°03′ N, 083°11′ W (NAD 83). This position is located off the Brownstown Wave pool area.

(ii) *Enforcement Date and Time.* One evening during the first week in July. The exact dates and times for this event will be determined annually.

(31) *City of St. Clair Fireworks, St. Clair, MI—*

(i) *Location.* All waters off the St. Clair River near St. Clair City Park, within a 300-yard radius of the fireworks launch site located at position 42°49′ N, 082°29′ W (NAD 83).

(ii) *Enforcement Date and Time.* One evening during the first week in July. The exact dates and times for this event will be determined annually.

(32) *Oscoda Township Fireworks, Oscoda, MI—*

(i) *Location.* All waters of Lake Huron, off the DNR Boat Launch near the mouth of the Au Sable River within a 300-yard radius of the fireworks launch site located at position 44°19′ N, 083°25′ W (NAD 83).

(ii) *Enforcement Date and Time.* One evening during the first week in July. The exact dates and times for this event will be determined annually.

(33) *Port Austin Fireworks, Port Austin, MI—*

(i) *Location.* All waters of Lake Huron, off the Port Austin break wall within a 300-yard radius of the fireworks launch site located at position 44°03′07'' N, 082°59′42'' W. (NAD 83).

(ii) *Enforcement Date and Time.* One evening during the first week in July. The exact dates and times for this event will be determined annually.

(34) *City of Wyandotte Fireworks, Wyandotte, MI—*

(i) *Location.* All waters of the Detroit River, off the break wall between Oak and Van Alstyne St., within a 300-yard radius of the fireworks launch site located at position 42°12′ N, 083°09′ W. (NAD 83).

(ii) *Enforcement Date and Time.* One evening during the first week in July. The exact dates and times for this event will be determined annually.

(35) *Grosse Pointe Farms Fireworks, Grosse Pointe Farms, MI—*

(i) *Location.* All waters of Lake St. Clair, within a 300-yard radius of the fireworks barge located at position 42°23′ N, 082°52′ W. (NAD 83). This position is located 300 yards east of Grosse Pointe Farms, MI.

(ii) *Enforcement Date and Time.* One evening during the first week in July. The exact dates and times for this event will be determined annually.

(36) *Caseville Fireworks, Caseville, MI—*

(i) *Location.* All waters of Saginaw Bay, within a 300-yard radius of the fireworks launch site located at position 43°56.9′ N, 083°17.2′ W. (NAD 83). This position is located off the Caseville break wall.

(ii) *Enforcement Date and Time.* One evening during the first week in July. The exact dates and times for this event will be determined annually.

(37) *Algonac Pickerel Tournament Fireworks, Algonac, MI—*

(i) *Location.* All waters of the St. Clair River, within a 300-yard radius of the fireworks barge located at position 41°37′ N, 082°32′ W. (NAD 83). This position is located between Algonac and Russell Island, St. Clair River-North Channel.

(ii) *Enforcement Date and Time.* One evening during the first week in July. The exact dates and times for this event will be determined annually.

(38) *Port Sanilac Fireworks, Port Sanilac, MI—*

(i) *Location.* All waters of Lake Huron within a 300-yard radius of the fireworks launch site located at position 43°25′ N, 082°31′ W. (NAD 83). This position is located at the South Harbor Break wall in Port Sanilac.

(ii) *Enforcement Date and Time.* One evening during the first week in July. The exact dates and times for this event will be determined annually.

(39) *St. Clair Shores Fireworks, St. Clair Shores, MI:*

(i) *Location.* All waters of Lake St. Clair within a 300-yard radius of the fireworks barge located at position 42°32′ N, 082°51′ W. (NAD 83). This position is located 1,000 yards east of Veteran's Memorial Park, St. Clair Shores.

(ii) *Enforcement Date and Time.* One evening during the first week in July. The exact dates and times for this event will be determined annually.

(40) *Port Huron 4th of July Fireworks, Port Huron, MI—*

(i) *Location.* All waters of the Black River within a 300-yard radius of the fireworks barge located at position 42°58′ N, 082°25′ W. (NAD 83). This position is located 300 yards east of 223 Huron Ave., Black River.

(ii) *Enforcement Date and Time.* One evening during the first week in July. The exact dates and times for this event will be determined annually.

(41) *Grosse Pointe Yacht Club 4th of July Fireworks, Grosse Pointe Shores, MI—*

(i) *Location.* All waters of Lake St. Clair within a 300-yard radius of the fireworks barge located at position 42°23′00″ N, 082°53′45″ W. (NAD 83). This position is located 400 yards east of the Grosse Pointe Yacht Club seawall, Lake St. Clair.

(ii) *Enforcement Date and Time.* One evening during the first week in July. The exact dates and times for this event will be determined annually.

(42) *Lexington Independence Festival Fireworks, Lexington, MI—*

(i) *Location.* All waters of Lake Huron within a 300-yard radius of the fireworks barge located at position 43°13′ N, 082°30′ W. (NAD 83). This position is located 300 yards east of the Lexington break wall, Lake Huron.

(ii) *Enforcement Date and Time.* One evening during the first week in July. The exact dates and times for this event will be determined annually.

(43) *City of Ecorse Water Festival Fireworks, Ecorse, MI—*

(i) *Location.* All waters of the Detroit River within a 300-yard radius of the fireworks barge located at position 41°14′ N, 083°09′ W. (NAD 83). This position is located in the Ecorse Channel at the northern end of Mud Island.

(ii) *Enforcement Date and Time.* One evening during the first week in July. The exact dates and times for this event will be determined annually.

(44) *Grosse Ile Yacht Club Fireworks, Grosse Ile, MI—*

(i) *Location.* All waters of the Detroit River within a 300-yard radius of the fireworks launch site located at position 42°05′23″ N, 083°09′00″ W. (NAD 83). This position is located in front of the Grosse Ile Yacht Club.

(ii) *Enforcement Date and Time.* One evening during the first week in July. The exact dates and times for this event will be determined annually.

(45) *Trenton Fireworks, Trenton, MI—*

(i) *Location.* All waters of the Detroit River within a 300-yard radius of the fireworks barge located at position 42°08′46″ N, 083°10′16″ W. (NAD 83). This position is located 200 yards east of Trenton in the Trenton Channel near Trenton, MI.

(ii) *Enforcement Date and Time.* One evening during the first week in July. The exact dates and times for this event will be determined annually.

(46) *Belle Maer Harbor 4th of July Fireworks, Harrison Township, MI—*

(i) *Location.* All waters of Lake St. Clair within a 300-yard radius of the

fireworks barge located at position 42°36′32″ N, 082°47′40″ W. (NAD 83). This position is located 400 yards east of Belle Maer Harbor, Lake St. Clair.

(ii) *Enforcement Date and Time.* One evening during the first week in July. The exact dates and times for this event will be determined annually.

(47) *Tawas City 4th of July Fireworks, Tawas, MI—*

(i) *Location.* All waters of Lake Huron within a 300-yard radius of the fireworks launch site located at position 44°13′ N, 083°30′ W. (NAD 83). This position is located off the Tawas City Pier.

(ii) *Enforcement Date and Time.* One evening during the first week in July. The exact dates and times for this event will be determined annually.

(48) *Venetian Festival Boat Parade and Fireworks, St. Clair Shores, MI—*

(i) *Location.* All waters of Lake St. Clair within a 300-yard radius of the fireworks barge located at position 42°28′ N, 082°52′ W. (NAD 83). This position is located 600 yards off Jefferson Beach Marina, Lake St, Clair.

(ii) *Enforcement Date and Time.* One evening during the second week in August. The exact dates and times for this event will be determined annually.

(49) *Celebrate America Fireworks, Grosse Pointe Farms, MI—*

(i) *Location.* All waters of Lake St. Clair within a 500-foot radius of the fireworks launch site located at position 42°22′58″ N, 082°53′46″ W. (NAD 83). This area is located southeast of the Grosse Pointe Yacht Club.

(ii) *Enforcement Date and Time.* One evening during the third week in June. The exact dates and times for this event will be determined annually.

(50) *Target Fireworks, Detroit, MI—*

(i) *Location.* The following three areas are safety zones:

(A) The first safety zone area will encompass all waters of the Detroit River bounded by the arc of a circle with a 900-foot radius with its center in position 42°19′23″ N, 083°04′34″ W.

(B) The second safety zone area will encompass a portion of the Detroit River bounded on the South by the International Boundary line, on the West by 083°03′30″ W, on the North by the City of Detroit shoreline and on the East by 083°01′15″ W.

(C) The third safety zone will encompass a portion of the Detroit River bounded on the South by the International Boundary line, on the West by the Ambassador Bridge, on the North by the City of Detroit shoreline, and on the East by the downstream end of Belle Isle. The Captain of the Port Detroit has determined that vessels below 65 feet in length may enter this zone.

(ii) *Enforcement Date and Time.* One evening during the last week in June. The exact dates and times for this event will be determined annually.

(51) *Sigma Gamma Association Fireworks, Grosse Pointe Farms, MI—*

(i) *Location.* All waters of Lake St. Clair, within a 300-yard radius of the fireworks launch site located at position 42°27′ N, 082°52′ W (NAD 83) This position is located in the vicinity of Ford's Cove.

(ii) *Enforcement Date and Time.* One evening during the last week in June. The exact dates and times for this event will be determined annually.

(52) *Southside Summer Fireworks, Port Huron, MI—*

(i) *Location.* All waters of St. Clair River within a 300 yard radius of position 42°57′55″ N, 082°25′20″ W. This position is located on the shore of the St. Clair River in the vicinity of Oak and 3rd Street, Port Huron, MI. All geographic coordinates are North American Datum of 1983 (NAD 83).

(ii) *Enforcement Date and Time.* One evening during the last week in June. The exact dates and times for this event will be determined annually.

(53) *Bay City Fireworks Festival, Bay City, MI—*

(i) *Location.* All waters of the Saginaw River, from a 100 yard radius around the center of the Veteran's Memorial Bridge, located at position 43°35.9′ N, 083°53.6′ W, to approximately 1100 yards south of the Veteran's Memorial Bridge to the River Walk Pier, located at position 43°35.3′ N, 083°53.8′ W. All geographic coordinates are North American Datum of 1983 (NAD 83).

(ii) *Enforcement Date and Time.* Three evenings during the first week in July. The exact dates and times for this event will be determined annually.

(54) *Toledo 4th of July Fireworks, Toledo, OH—*

(i) *Location.* All waters of the Maumee River within a 300-yard radius of the fireworks launch site located at position 41°38′35″ N, 083°31′54″ W. All geographic coordinates are North American Datum of 1983 (NAD 83).

(ii) *Enforcement Date and Time.* One evening during the first week in July. The exact dates and times for this event will be determined annually.

(55) *Toledo Labor Day Fireworks, Toledo, OH—*

(i) *Location:* All waters of the Maumee River within a 300-yard radius of the fireworks launch site located at position 41°38′35″ N, 083°31′54″ W. All geographic coordinates are North American Datum of 1983 (NAD 83).

(ii) *Enforcement Date and Time.* One evening during the first week in September. The exact dates and times for this event will be determined annually.

(56) *Catawba Island Club Fireworks; Catawba Island, OH—*

(i) *Location.* All waters of Lake Erie within a 250-yard radius of the fireworks launch site located at position 41° 34′20″ N, 082°51′18″ W (NAD 83).

(ii) *Enforcement Date and Time.* This safety zone will be enforced one evening during the last week in May.

(57) *Put-In-Bay Chamber of Commerce Fireworks, Put-In-Bay, OH—*

(i) *Location.* All waters of Lake Erie within a 1,000-foot radius of the fireworks launch site located at position 41–39′–19″ N, 082–48′–57″ W (NAD 83). This area is located in the Put-In-Bay Harbor.

(ii) *Enforcement Date and Time*s. This safety zone will be enforced one evening during the third week in June, one evening during the last week in June, one evening during the first week in September, and one evening during the second week in September.

(58) *Bay Point Fireworks Display, Marblehead, OH—*

(i) *Location.* All waters of Lake Erie within a 250-yard radius of the fireworks launch site located at position 41–30′–29.23″ N, 082–43′–8.45″ W (NAD 83).

(ii) *Enforcement Date and Time.* This safety zone will be enforced one evening during the first week in July.

(59) *Marysville Days Fireworks, Marysville, MI—*

(i) *Location.* All waters of the St. Clair River within a 600 foot radius of the fireworks launch site located on land at position 42–54′–25″ N, 082–27′–58″ W (NAD 83).

(ii) *Enforcement Date and Time.* This safety zone will be enforced one evening during the last week in June.

(60) *3 Disciplines Triathlon, Lake Erie, Monroe, MI—*

(i) *Location.* The following area is a safety zone: all navigable waters of Lake Erie, Monroe, MI bound by a line beginning onshore at 41°54′14″ N; 083°20′01″ W to 41°54′13″ N; 083°19′48″ W to 41°54′50″ N; 083°19′39″ W to 41°54′51″ N; 083°19′52″ W, and from thence along the shoreline to the beginning (NAD 83).

(ii) *Enforcement Date and Time.* One morning during a weekend in June. The exact dates and times will be determined annually.

(61) *BGSU Football Gridiron Classic Golf and Dinner Fireworks, Catawba Island, OH—*

(i) *Location.* All waters of Lake Erie within a 75-yard radius of the fireworks launch site located at position 41°34′18″ N, 082°51′18″ W (NAD 83).

(ii) *Enforcement Date and Time.* One evening in July. The exact dates and times will be determined annually.

(62) *Jet Express Triathlon, Sandusky Bay, Lake Erie, Lakeside, OH—*

(i) *Location.* All waters of Lake Erie within a direct line from 41°33′49″ N 082°47′8″ W to 41°33′25″ N 082°48′8″ W and 15 yards on either side of direct line. All geographic coordinates are North American Datum of 1983 (NAD 83).

(ii) *Enforcement Date and Time.* One morning during a weekend in September. The exact dates and times will be determined annually.

(63) *Wounded Warriors Benefit, East Huron, OH—*

(i) *Location.* All waters of Lake Erie within a 2500 ft radius of the pumpkin launch site located at position 41°23′6.7194″ N, 082°27′46.6812″ W. All geographic coordinates are North American Datum of 1983 (NAD 83).

(ii) *Enforcement Date and Time.* One day on the third or fourth weekend of October. The exact dates and times will be determined annually.

(64) *Detroit Symphony Orchestra Fireworks at the Ford House; Grosse Pointe, MI—*

(i) *Location.* All waters of Lake St. Clair, Grosse Pointe Shores, MI within a 600 foot radius of position 42°27′15″ N and 082°51′56″ W (NAD 83).

(ii) *Enforcement Date and Time.* One evening during the first two weeks in July. The exact dates and times will be determined annually.

(65) *Blue Water Festival Fireworks, Port Huron, MI—*

(i) *Location.* All the waters of the St. Clair River, Port Huron, MI within a 500 foot radius of position 42°57′55″ N and 082°25′19″ W (NAD 83).

(ii) *Enforcement Date and Time.* One evening during the first two weeks in July. The exact dates and times will be determined annually.

(66) *Cannonade; Harsens Island, MI—*

(i) *Location.* All waters of Lake St. Clair, Muscamoot Bay, Harsens Island, MI within an area bound by the coordinates starting at the cannon firing position located at 42°32.5′ N, 082°40.1′ W extending west to the Old Channel Light located at position 42°32.5′ N, 082°41.6′ W angling northeast to position 42°33.5″N, 082°40.6′ W then angling southeast to the point of origin (NAD 83).

(ii) *Enforcement Date and Time.* One afternoon during the first or second weekend of October.

(b) *Definitions.* The following definitions apply to this section:

(1) Designated Representative means any Coast Guard commissioned, warrant, or petty officer designated by the Captain of the Port Detroit to monitor a safety zone, permit entry into the zone, give legally enforceable orders to persons or vessels within a zone, and take other actions authorized by the Captain of the Port.

(2) Public vessel means vessels owned, chartered, or operated by the United States, or by a State or political subdivision thereof.

(c) *Regulations.* (1) In accordance with the general regulations in § 165.23 of this part, entry into, transiting, or anchoring within anyone of the safety zones established by this section is prohibited unless authorized by the Captain of the Port Detroit or his designated representative.

(2)(i) These safety zones are closed to all vessel traffic, except as may be permitted by the Captain of the Port Detroit or his designated representative.

(ii) All persons and vessels must comply with the instructions of the Coast Guard Captain of the Port or his designated representative.

(iii) Upon being hailed by the U.S. Coast Guard by siren, radio, flashing light or other means, the operator of a vessel shall proceed as directed.

(3)(i) All vessels must obtain permission from the Captain of the Port or his designated representative to enter, move within, or exit the safety zone established in this section when this safety zone is enforced.

(ii) Vessels and persons granted permission to enter the safety zone must obey all lawful orders or directions of the Captain of the Port or a designated representative.

(iii) While within a safety zone, all vessels must operate at the minimum speed necessary to maintain a safe course.

(d) *Exemption.* Public vessels, as defined in paragraph (b) of this section, are exempt from the requirements in this section.

(e) *Waiver.* For any vessel, the Captain of the Port Detroit or his designated representative may waive any of the requirements of this section, upon finding that operational conditions or other circumstances are such that application of this section is unnecessary or impractical for the purposes of public or environmental safety.

(f) *Notification.* The Captain of the Port Detroit will notify the public that the safety zones in this section are or will be enforced by all appropriate means to the affected segments of the public including publication in the **Federal Register** as practicable, in accordance with 33 CFR 165.7(a). Such means of notification may also include, but are not limited to Broadcast Notice to Mariners or Local Notice to Mariners. The Captain of the Port may issue a Broadcast Notice to Mariners notifying the public when enforcement of the safety zone established by this section is cancelled if deemed necessary.

Dated: April 18, 2013.

D.V. Smith,

Commander, U.S. Coast Guard, Acting Captain of the Port Detroit.

[FR Doc. 2013–10609 Filed 5–3–13; 8:45 am]

BILLING CODE 9110–04–P

ENVIRONMENTAL PROTECTION AGENCY

40 CFR Part 52

[EPA–R06–OAR–2011–0494; FRL–9808–1]

Approval and Promulgation of Air Quality Implementation Plans; Texas; Revisions to Control of Air Pollution From Nitrogen Compounds From Stationary Sources

AGENCY: Environmental Protection Agency (EPA).

ACTION: Proposed rule.

SUMMARY: The EPA is proposing to approve revisions to the Texas State Implementation Plan (SIP), 30 TAC, Chapter 117 Control of Air Pollution from Nitrogen Compounds. These revisions concern two separate actions. First, we are proposing to approve revisions to Texas SIP, Chapter 117 emissions specifications for lean burn engines fired on landfill or other biogas at minor sources of Nitrogen Oxides (NO_X). Second, we are proposing to approve revisions to Texas SIP, Chapter 117 to include low temperature drying and curing ovens used in wet-laid non-woven fiber mat manufacturing operations when nitrogen containing resins or other additives are used. These two actions affect NO_X sources operating in the Dallas Fort-Worth 1997 8-hour ozone nonattainment area. The EPA is approving these two actions pursuant to section 110 of the Federal Clean Air Act.

DATES: Written comments must be received on or before June 5, 2013.

ADDRESSES: Comments may be mailed to Mr. Guy Donaldson, Chief, Air Planning Section (6PD–L), Environmental Protection Agency, 1445 Ross Avenue, Suite 1200, Dallas, Texas 75202–2733. Comments may also be submitted electronically or through hand delivery/courier by following the detailed instructions in the **ADDRESSES** section of the direct final rule located in the rules section of this **Federal Register**.

FOR FURTHER INFORMATION CONTACT: Mr. Alan Shar, Air Planning Section (6PD–L), telephone 214–665–6691; fax number 214–665–7263; email address *shar.alan@epa.gov.*

SUPPLEMENTARY INFORMATION: In the final rules section of this **Federal Register**, EPA is approving the State's SIP submittal as a direct final rule without prior proposal because the Agency views this as a noncontroversial submittal and anticipates no adverse comments. A detailed rationale for the approval is set forth in the direct final rule. If no relevant adverse comments are received in response to this action, no further activity is contemplated. If EPA receives adverse comments, the direct final rule will be withdrawn and all public comments received will be addressed in a subsequent final rule based on this proposed rule. EPA will not institute a second comment period. Any parties interested in commenting on this action should do so at this time. Please note that if EPA receives an adverse comment on an amendment, paragraph, or section of this rule and if that provision may be severed from the remainder of the rule, EPA may adopt as final those provisions of the rule that are not the subject of an adverse comment.

For additional information, see the direct final rule, which is located in the rules section of this **Federal Register**.

Dated: April 19, 2013.

Ron Curry,

Regional Administrator, Region 6.

[FR Doc. 2013–10559 Filed 5–3–13; 8:45 am]

BILLING CODE 6560–50–P

ENVIRONMENTAL PROTECTION AGENCY

40 CFR Part 52

[EPA–R06–OAR–2012–0766; FRL–9808–3]

Approval and Promulgation of Air Quality Implementation Plans; Texas; Approval of Texas Low Emission Diesel Fuel Rule Revisions

AGENCY: Environmental Protection Agency (EPA).

ACTION: Proposed rule.

SUMMARY: EPA is proposing approval of a revision to the Texas State Implementation Plan (SIP) concerning the Texas Low Emission Diesel (TxLED) Fuel rules. The revisions clarify existing definitions and provisions, revise the approval procedures for alternative diesel fuel formulations, add new registration requirements, and update the rule to reflect the current program status because the rule is now fully implemented. This SIP revision meets statutory requirements.

DATES: Written comments must be received on or before June 5, 2013.

ADDRESSES: Comments may be mailed to Mr. Guy Donaldson, Chief, Air Planning Section (6PD–L), Environmental Protection Agency, 1445 Ross Avenue, Suite 1200, Dallas, Texas 75202–2733. Comments may also be submitted electronically or through hand delivery/courier by following the detailed instructions in the **ADDRESSES** section of the direct final rule located in the rules section of this **Federal Register**.

FOR FURTHER INFORMATION CONTACT: Ms. Sandra Rennie, Air Planning Section (6PD–L), Environmental Protection Agency, Region 6, 1445 Ross Avenue, Suite 700, Dallas, Texas 75202–2733, telephone (214) 665–7367; fax number 214–665–7263; email address *rennie.sandra@epa.gov.*

SUPPLEMENTARY INFORMATION: In the final rules section of this **Federal Register**, EPA is approving the State's SIP submittal without prior proposal because the Agency views this as a noncontroversial submittal and anticipates no adverse comments. A detailed rationale for the approval is set forth in the direct final rule. If no adverse comments are received in response to this action, no further activity is contemplated. If EPA receives adverse comments, the direct final rule will be withdrawn and all public comments received will be addressed in a subsequent final rule based on this proposed rule. EPA will not institute a second comment period. Any parties interested in commenting on this action should do so at this time. Please note that if EPA receives adverse comment on an amendment, paragraph, or section of this rule and if that provision may be severed from the remainder of the rule, EPA may adopt as final those provisions of the rule that are not the subject of an adverse comment.

For additional information, see the direct final rule which is located in the rules section of this **Federal Register**.

Dated: April 5, 2013.

Ron Curry,

Regional Administrator, Region 6.

[FR Doc. 2013–10542 Filed 5–3–13; 8:45 am]

BILLING CODE 6560–50–P

ENVIRONMENTAL PROTECTION AGENCY

40 CFR Part 52

[EPA–R05–OAR–2010–0394; EPA–R05–OAR–2012–0786; FRL–9786–1]

Approval and Promulgation of Air Quality Implementation Plans; Illinois; Consumer Products and AIM Rules

AGENCY: Environmental Protection Agency (EPA).

ACTION: Proposed rule.

SUMMARY: EPA is proposing to approve a revision to the Illinois State Implementation Plan (SIP). This approval resolves the issues raised in the June 7, 2012 (77 FR 33659) conditional approval of Illinois' rules. EPA is also proposing to approve volatile organic compound (VOC) content limits and associated provisions for additional consumer products categories into the State's SIP. Finally, EPA is proposing to approve language to clarify VOC limit applicability for architectural and industrial maintenance coatings into the Illinois SIP.

DATES: Comments must be received on or before June 5, 2013.

ADDRESSES: Submit your comments, identified by Docket ID Nos. EPA–R05–OAR–2010–0394, EPA–R05–OAR–2012–0786, by one of the following methods:

1. *www.regulations.gov:* Follow the on-line instructions for submitting comments.
2. *Email: blakley.pamela@epa.gov.*
3. *Fax:* (312) 692–2450.
4. *Mail:* Pamela Blakley, Chief, Control Strategies Section, Air Programs Branch (AR–18J), U.S. Environmental Protection Agency, 77 West Jackson Boulevard, Chicago, Illinois 60604.
5. *Hand Delivery:* Pamela Blakley, Chief, Criteria Pollutant Section, Air Programs Branch (AR–18J), U.S. Environmental Protection Agency, 77 West Jackson Boulevard, Chicago, Illinois 60604. Such deliveries are only accepted during the Regional Office normal hours of operation, and special arrangements should be made for deliveries of boxed information. The Regional Office official hours of business is Monday through Friday, 8:30 a.m. to 4:30 p.m., excluding Federal holidays.

Please see direct final rule which is located in the Rules section of this **Federal Register** for detailed instructions on how to submit comments.

FOR FURTHER INFORMATION CONTACT: Anthony Maietta, Environmental

Protection Specialist, Air Programs Branch (AR–18J), Environmental Protection Agency, Region 5, 77 West Jackson Boulevard, Chicago, Illinois 60604, (312) 353–8777, *maietta.anthony@epa.gov.*

SUPPLEMENTARY INFORMATION: In the Final Rules section of this **Federal Register**, EPA is approving the State's SIP submittal as a direct final rule without prior proposal because the Agency views this as a noncontroversial submittal and anticipates no adverse comments. A detailed rationale for the approval is set forth in the direct final rule. If no adverse comments are received in response to this rule, no further activity is contemplated. If EPA receives adverse comments, the direct final rule will be withdrawn and all public comments received will be addressed in a subsequent final rule based on this proposed rule. EPA will not institute a second comment period. Any parties interested in commenting on this action should do so at this time. Please note that if EPA receives adverse comment on an amendment, paragraph, or section of this rule and if that provision may be severed from the remainder of the rule, EPA may adopt as final those provisions of the rule that are not the subject of an adverse comment. For additional information, see the direct final rule which is located in the Rules section of this **Federal Register**.

Dated: February 13, 2013.

Susan Hedman,

Regional Administrator, Region 5.

[FR Doc. 2013–09296 Filed 5–3–13; 8:45 am]

BILLING CODE 6560–50–P

DEPARTMENT OF THE INTERIOR

Fish and Wildlife Service

50 CFR Part 17

[FWS–R2–ES–2012–0071; 4500030113]

RIN 1018–AY21

Endangered and Threatened Wildlife and Plants; Listing the Lesser Prairie-Chicken as a Threatened Species With a Special Rule

AGENCY: Fish and Wildlife Service, Interior.

ACTION: Proposed rule; revision and reopening of comment period.

SUMMARY: We, the U.S. Fish and Wildlife Service, propose to create a special rule under authority of section 4(d) of the Endangered Species Act of 1973, as amended (Act), that provides measures that are necessary and advisable to provide for the conservation of the lesser prairie-chicken (*Tympanuchus pallidicinctus*). In addition, we announce the reopening of the public comment period on the December 11, 2012, proposed rule to list the lesser prairie-chicken as a threatened species under the Act. We also announce the availability of a draft rangewide conservation plan for the lesser prairie-chicken, which has been prepared by the Lesser Prairie-Chicken Interstate Working Group, and request comments on the plan as it relates to our determination of status under section 4(a)(1) of the Act.

DATES: We will accept comments received or postmarked on or before June 20, 2013. Comments submitted electronically using the Federal eRulemaking Portal (see **ADDRESSES**, below) must be received by 11:59 p.m. Eastern Time on the closing date. We must receive requests for public hearings, in writing, at the address shown in **ADDRESSES** by June 20, 2013.

ADDRESSES: You may submit comments by one of the following methods:

(1) *Electronically:* Go to the Federal eRulemaking Portal: *http://www.regulations.gov.* In the Search box, enter FWS–R2–ES–2012–0071, which is the docket number for this rulemaking. You may submit a comment by clicking on ''Comment Now!''

(2) *By hard copy:* Submit by U.S. mail or hand-delivery to: Public Comments Processing, Attn: FWS–R2–ES–2012–0071; Division of Policy and Directives Management; U.S. Fish and Wildlife Service; 4401 N. Fairfax Drive, MS 2042–PDM; Arlington, VA 22203.

We request that you send comments only by one of the methods described above. We will post all comments on *http://www.regulations.gov.* This generally means that we will post any personal information you provide us (see the Public Comments section below for more information).

FOR FURTHER INFORMATION CONTACT: Dixie Porter, Field Supervisor, Oklahoma Ecological Services Field Office, 9014 East 21st Street, Tulsa, OK 74129; by telephone 918–581–7458 or by facsimile 918–581–7467. Persons who use a telecommunications device for the deaf (TDD) may call the Federal Information Relay Service (FIRS) at 800–877–8339.

SUPPLEMENTARY INFORMATION:

Executive Summary

This document consists of: (1) A proposed special rule under section 4(d) of the Endangered Species Act of 1973, as amended (Act; 16 U.S.C. 1531 *et seq.*), that outlines the prohibitions, and exceptions to those prohibitions, necessary and advisable to provide for the conservation of the lesser prairie-chicken; and (2) a reopening of the comment period for the proposed rule to list the lesser prairie-chicken as a threatened species under the Act.

Why We Need To Publish a Proposed Rule. On December 11, 2012, the Service published a proposed rule to list the lesser prairie-chicken as a threatened species under the Act (77 FR 73828). At that time, the Service indicated that we would consider whether to subsequently propose a section 4(d) special rule (hereafter referred to as 4(d) special rule). Section 4(d) of the Act specifies that, for threatened species, the Secretary shall issue such regulations as [s]he deems necessary and advisable to provide for the conservation of the species. This proposed 4(d) special rule provides measures that are tailored to the conservation needs of the lesser prairie-chicken.

What Is the Effect of This Proposed Rule? At the time of the 2012 proposed listing rule (77 FR 73828), we indicated that we would consider whether to subsequently propose a 4(d) special rule for the lesser prairie-chicken. We are now proposing a 4(d) special rule and intend to finalize it concurrent with the final listing rule, if the results of our final listing determination conclude that threatened species status is appropriate.

The proposed 4(d) special rule allows for take of the lesser prairie-chicken incidental to activities conducted pursuant to a comprehensive conservation program that was developed by or in coordination with a State agency and that has been determined by the Service pursuant to the criteria outlined in this proposed rule to provide a net conservation benefit to the lesser prairie-chicken. Additionally, the proposed 4(d) special rule provides that any take of lesser prairie-chickens incidental to agricultural activities that are included within a conservation plan developed by the Natural Resources Conservation Service (NRCS) for private agricultural lands in connection with NRCS's Lesser Prairie-Chicken Initiative (LPCI), as specified in this proposed rule, is not a prohibited action under the Act. If an activity resulting in take of lesser prairie-chicken is not exempted under this 4(d) special rule, then the general prohibitions at 50 CFR 17.31 would apply. We would require a permit for such an activity as specified in our regulations. Nothing in this proposed 4(d) special rule affects the consultation requirements under section 7 of the Act.

The Basis for Our Action. Under section 4(d) of the Act, the Secretary of the Interior has discretion to issue such regulations as [s]he deems necessary and advisable to provide for the conservation of the species. The Secretary also has the discretion to prohibit by regulation with respect to a threatened species any act prohibited by section 9(a)(1) of the Act.

Public Comments

To allow the public to comment simultaneously on this proposed 4(d) special rule, the proposed listing rule, and the draft rangewide conservation plan for the lesser prairie-chicken prepared by the Lesser Prairie-Chicken Interstate Working Group, we also announce the reopening of the comment period on the Service's December 11, 2012, proposed rule to list the lesser prairie-chicken as a threatened species under the Act. We intend to finalize the 4(d) special rule concurrent with the final listing rule, if the result of our final listing determination concludes that threatened species status is appropriate. Any final action resulting from the proposed rules will be based on the best scientific and commercial data available and be as accurate and as effective as possible. Therefore, we request comments or information from other concerned governmental agencies, Native American tribes, the scientific community, industry, general public, and other interested parties concerning the proposed listing rule and 4(d) special rule. We particularly seek comments regarding:

(1) The historical and current status and distribution of the lesser prairie-chicken, its biology and ecology, specific threats (or lack thereof) and regulations that may be addressing those threats and ongoing conservation measures for the species and its habitat.

(2) Information relevant to the factors that are the basis for making a listing determination for a species under section 4(a) of the Act, which are:

(a) The present or threatened destruction, modification, or curtailment of the species' habitat or range;

(b) Overutilization for commercial, recreational, scientific, or educational purposes;

(c) Disease or predation;

(d) The inadequacy of existing regulatory mechanisms; or

(e) Other natural or manmade factors affecting its continued existence and threats to the species or its habitat.

(3) Application of the Lesser Prairie-Chicken Interstate Working Group's draft rangewide conservation plan to our determination of status under section 4(a)(1) of the Act, particularly comments or information to help us assess the certainty that the rangewide conservation plan will be effective in conserving the lesser prairie-chicken and will be implemented.

(4) Which areas would be appropriate as critical habitat for the species and why areas should or should not be proposed for designation as critical habitat, including whether any threats to the species from human activity would be expected to increase due to the designation and whether that increase in threat would outweigh the benefit of designation such that the designation of critical habitat may not be prudent.

(5) Specific information on:

(a) The amount and distribution of habitat for the lesser prairie-chicken;

(b) What may constitute ''physical or biological features essential to the conservation of the species,'' within the geographical range currently occupied by the species;

(c) Where these features are currently found;

(d) Whether any of these features may require special management considerations or protection;

(e) What areas, that were occupied at the time of listing (or are currently occupied) and that contain features essential to the conservation of the species, should be included in the designation and why; and

(f) What areas not occupied at the time of listing are essential for the conservation of the species and why.

(6) Information on the projected and reasonably likely impacts of climate change on the lesser prairie-chicken and its habitat.

(7) Whether measures outlined in this proposed 4(d) special rule are necessary and advisable for the conservation and management of the lesser prairie-chicken.

(8) Information concerning whether it would be appropriate to include in the 4(d) special rule a provision that would allow continued enrollment in existing Candidate Conservation Agreements with Assurances for the lesser prairie-chicken. These existing agreements would be recognized as Service-approved conservation plans and their take authorization and continued enrollment would be provided for under this 4(d) special rule.

(9) Information concerning whether it would be appropriate to include in the 4(d) special rule a provision for take of lesser prairie-chickens in accordance with applicable State law for educational or scientific purposes, the enhancement of propagation or survival of the species, zoological exhibition, and other conservation purposes consistent with the Act.

(10) Information concerning whether it would be appropriate to include in the 4(d) special rule a provision for take of lesser prairie-chickens in the course of State-managed hunting programs for the lesser prairie-chicken or incidental to hunting activities directed at greater prairie-chicken (*Tympanuchus cupido*), including any information about State management plans related to hunting regulations and any measures within those plans that may avoid or minimize the risk of lesser prairie-chicken mortality incidental to lawful hunting for the greater prairie-chicken.

(11) Whether and how the Service should expand the scope of this 4(d) special rule to encourage landowners removing their lands from the Conservation Reserve Program to continue managing those areas for the benefit of the lesser prairie-chicken.

(12) Whether and how the Service should expand the scope of this 4(d) special rule to encourage farmers and ranchers not participating in the Natural Resources Conservation Service's Lesser Prairie-Chicken Initiative to manage their lands for the benefit of the lesser prairie-chicken.

(13) Whether the Service should expand the scope of this 4(d) special rule to allow incidental take of lesser prairie-chickens if the take results from implementation of a comprehensive lesser prairie-chicken conservation program that was developed by an entity other than a State agency or their agent(s).

(14) Additional provisions the Service may wish to consider for a 4(d) special rule in order to conserve, recover, and manage the lesser prairie-chicken.

We will consider all comments and information received during our preparation of a final determination on the status of the species and the 4(d) special rule. Accordingly, the final decision may differ from this proposal.

Please note that comments merely stating support for or opposition to the actions under consideration without providing supporting information, although noted, will not be considered in making a determination, as section 4(b)(1)(A) of the Act directs that determinations as to whether any species is a threatened or endangered species must be made ''solely on the basis of the best scientific and commercial data available.''

You may submit your comments and materials concerning this proposed rule by one of the methods listed in **ADDRESSES**. We request that you send comments only by the methods described in **ADDRESSES**.

If you submit information via *http://www.regulations.gov,* your entire submission—including any personal identifying information—will be posted on the Web site. If your submission is made via a hardcopy that includes personal identifying information, you may request at the top of your document that we withhold this information from public review. However, we cannot guarantee that we will be able to do so. We will post all hardcopy submissions on *http://www.regulations.gov.* Please include sufficient information with your comments to allow us to verify any scientific or commercial information you include.

Comments and materials we receive, as well as supporting documentation we used in preparing this proposed rule, will be available for public inspection on *http://www.regulations.gov,* or by appointment, during normal business hours, at the U.S. Fish and Wildlife Service, Oklahoma Ecological Services Field Office (see **FOR FURTHER INFORMATION CONTACT**).

Previous Federal Actions

A settlement agreement in *In re Endangered Species Act Section 4 Deadline Litigation,* No. 10–377 (EGS), MDL Docket No. 2165 (D.D.C. May 10, 2011) was reached with WildEarth Guardians in which we agreed to submit a proposed listing rule for the lesser prairie-chicken to the **Federal Register** for publication by September 30, 2012. On September 27, 2012, the settlement agreement was modified to require that the proposed listing rule be submitted to the **Federal Register** on or before November 29, 2012. On December 11, 2012, we published in the **Federal Register** a proposed rule to list the lesser prairie-chicken as a threatened species under the Act (77 FR 73828). The proposed listing rule had a 90-day comment period, ending March 11, 2013. We held a public meeting and hearing in Woodward, Oklahoma, on February 5, 2013; in Garden City, Kansas, on February 7, 2013; in Lubbock, Texas, on February 11, 2013; and in Roswell, New Mexico, on February 12, 2013. Pursuant to the settlement agreement, a final listing determination is to be submitted to the **Federal Register** on or before September 30, 2013, unless the Secretary finds that substantial disagreement exists regarding the sufficiency or accuracy of the available data relevant to the listing determination, in which case the final listing determination is to be submitted to the **Federal Register** on or before March 31, 2014.

For information on previous Federal actions pertaining to the lesser prairie-chicken, please refer to the proposed listing rule, which we published in the **Federal Register** on December 11, 2012 (77 FR 73828).

Background

This document discusses only those topics directly relevant to the proposed 4(d) special rule for the lesser prairie-chicken. For more information on the lesser prairie-chicken and its habitat, please refer to the December 11, 2012, proposed listing rule (77 FR 73828), which is available online at *http://www.regulations.gov* (at Docket Number FWS–R2–ES–2012–0071) or from the Oklahoma Ecological Services Field Office (see **FOR FURTHER INFORMATION CONTACT**).

As discussed in the proposed listing rule, the primary factors supporting the proposed threatened species status for the lesser prairie-chicken are the impacts of cumulative habitat loss and fragmentation. These impacts are the result of conversion of grasslands to agricultural uses; encroachment by invasive woody plants; wind energy development; petroleum production; and presence of roads and manmade vertical structures including towers, utility lines, fences, turbines, wells, and buildings.

The Act does not specify particular prohibitions, or exceptions to those prohibitions, for threatened species. Instead, under section 4(d) of the Act, the Secretary of the Interior has the discretion to issue such regulations as [s]he deems necessary and advisable to provide for the conservation of such species. The Secretary also has the discretion to prohibit by regulation with respect to any threatened species, any act prohibited under section 9(a)(1) of the Act. Exercising this discretion, the Service developed general prohibitions (50 CFR 17.31) and exceptions to those prohibitions (50 CFR 17.32) under the Act that apply to most threatened species. Alternately, for other threatened species, the Service may develop specific prohibitions and exceptions that are tailored to the specific conservation needs of the species. In such cases, some of the prohibitions and authorizations under 50 CFR 17.31 and 17.32 may be appropriate for the species and incorporated into a special rule under section 4(d) of the Act, but the 4(d) special rule will also include provisions that are tailored to the specific conservation needs of the threatened species and may be more or less restrictive than the general provisions at 50 CFR 17.31.

At the time of the proposed listing rule, we indicated that we would consider whether to subsequently propose a 4(d) special rule for the lesser prairie-chicken. In that proposed rule, we solicited public comments as to which prohibitions, and exceptions to those prohibitions, are necessary and advisable to provide for the conservation of the lesser prairie-chicken. In recognition of conservation efforts that provide for conservation and management of the lesser prairie-chicken and its habitat in a manner consistent with the purposes of the Act, we are now proposing a 4(d) special rule that outlines the prohibitions, and exceptions to those prohibitions, necessary and advisable for the conservation of the lesser prairie-chicken.

Since the time of the proposed listing rule, the Lesser Prairie-Chicken Interstate Working Group, in association with the Western Association of Fish and Wildlife Agencies, has drafted a rangewide conservation plan for the lesser prairie-chicken. We would like to consider the conservation measures in this plan in our final listing determination for the lesser prairie-chicken. As such, we are reopening the comment period to allow the public an opportunity to provide comment on the draft plan as it applies to our determination of status under section 4(a)(1) of the Act, particularly comments or information to help us assess the certainty that the rangewide conservation plan will be effective in conserving the lesser prairie-chicken and will be implemented. The draft plan is available on the Internet in Docket No. FWS–R2–ES–2012–0071 at *http://www.regulations.gov.*

Provisions of the Proposed 4(d) Special Rule for the Lesser Prairie-Chicken

Under section 4(d) of the Act, the Secretary may publish a special rule that modifies the standard protections for threatened species with special measures tailored to the conservation of the species that are determined to be necessary and advisable. Under this proposed 4(d) special rule, the Service proposes that all of the prohibitions under 50 CFR 17.31 and 17.32 will apply to the lesser prairie-chicken, except as noted below. The proposed 4(d) special rule will not remove or alter in any way the consultation requirements under section 7 of the Act.

Conservation Programs

The Service proposes that take incidental to activities conducted pursuant to a comprehensive conservation program that was developed by or in coordination with the State agency or agencies responsible

for the management and conservation of fish and wildlife within the affected State(s), or their agent(s), that has a clear mechanism for enrollment of participating landowners, and that has been determined by the Service to provide a net conservation benefit to the lesser prairie-chicken, will not be prohibited. In making its determination, the Service will consider:

(i) Whether the program comprehensively addresses all the threats affecting the lesser prairie-chicken within the program area;

(ii) Whether the program establishes objective, measurable biological goals and objectives for population and habitat necessary to ensure a net conservation benefit, and provides the mechanisms by which those goals and objectives will be achieved;

(iii) Whether the program administrators demonstrate the capability and funding mechanisms for effectively implementing all elements of the conservation program, including enrollment of participating landowners, monitoring of program activities, and enforcement of program requirements;

(iv) Whether the program employs an adaptive management strategy to ensure future program adaptation as necessary and appropriate; and

(v) Whether the program includes appropriate monitoring of effectiveness and compliance.

The Service proposes this 4(d) special rule in recognition of the significant conservation planning efforts occurring throughout the range of the lesser prairie-chicken for the purpose of reducing or eliminating threats affecting the species. Multiple Federal and State agencies have developed localized conservation programs throughout the range of the lesser prairie-chicken, and these programs have provided a conservation benefit to the species. However, existing programs do not address the suite of factors contributing to cumulative habitat loss and fragmentation, the species' primary threat, across the entire five-state range of the lesser prairie-chicken.

The criteria presented here are meant to encourage the development of a coordinated and comprehensive effort to improve habitat conditions and the status of the species across its entire range. For the Service to approve coverage of a comprehensive conservation program under this 4(d) special rule, the program must provide a net conservation benefit to the lesser prairie-chicken population. Conservation, as defined in section 3(3) of the Act, means ''to use and the use of all methods and procedures which are necessary to bring any endangered species or threatened species to the point at which the measures provided pursuant to the Act are no longer necessary.'' The program must also be periodically reviewed by the Service and determined that it continues to provide a net conservation benefit to the lesser prairie-chicken. As a result of this provision, the Service expects that rangewide conservation actions will be implemented with a high level of certainty that the program will lead to the long-term conservation of the lesser prairie-chicken.

Agricultural Activities

The Service proposes that take of the lesser prairie-chicken will not be prohibited provided the take is incidental to activities that are conducted in accordance with NRCS's Lesser Prairie-Chicken Initiative (LPCI).

The LPCI provides financial and technical assistance to participating landowners to implement practices beneficial to the lesser prairie-chicken that also contribute to the sustainability of landowners' agricultural operations. Conservation practice standards encompassed by the LPCI focus primarily on upland wildlife habitat management and include brush management, prescribed grazing, range planting, prescribed burning and restoration of rare and declining habitats. In all, 22 conservation practice standards are implemented under the LPCI.

The Service issued a conference report to the NRCS in connection with the NRCS's LPCI on June 30, 2011 (*http://www.nrcs.usda.gov/Internet/FSE_DOCUMENTS/stelprdb1044884.pdf*), in which the Service determined that the proposed action, which incorporates the procedures, practice standards, and conservation measures of the LPCI, is not likely to jeopardize the continued existence of the lesser prairie-chicken. Conference procedures under section 7 of the Act are required only when a Federal agency (action agency) proposes an activity that is likely to jeopardize the continued existence of a species that has been proposed for listing under the Act or when the proposed activity is likely to destroy or adversely modify proposed critical habitat. However, conference procedures may also be used to assist an action agency in planning a proposed action so that potential conflicts may be identified and resolved early in the planning process. During the conference, the Service may provide recommendations on ways to avoid or minimize adverse effects of the proposed action. The conclusions reached during a conference and any subsequent recommendations are then provided to the action agency in a conference report.

This provision of the proposed 4(d) special rule for agricultural activities will promote conservation of the species by encouraging landowners and ranchers to continue managing the remaining landscape in ways that meet the needs of their operation while simultaneously providing suitable habitat for the lesser prairie-chicken.

Proposed Determination

Section 4(d) of the Act states that ''the Secretary shall issue such regulations as [s]he deems necessary and advisable to provide for the conservation'' of species listed as a threatened species. Conservation is defined in the Act to mean ''to use and the use of all methods and procedures which are necessary to bring any endangered species or threatened species to the point at which the measures provided pursuant to [the Act] are no longer necessary.'' Additionally, section 4(d) states that the Secretary ''may by regulation prohibit with respect to any threatened species any act prohibited under section 9(a)(1).''

The courts have recognized the extent of the Secretary's discretion under this standard to develop rules that are appropriate for the conservation of a species. For example, the Secretary may find that it is necessary and advisable not to include a taking prohibition, or to include a limited taking prohibition. See *Alsea Valley Alliance* v. *Lautenbacher,* 2007 U.S. Dist. Lexis 60203 (D. Or. 2007); *Washington Environmental Council* v. *National Marine Fisheries Service,* and 2002 U.S. Dist. Lexis 5432 (W.D. Wash. 2002). In addition, as affirmed in *State of Louisiana* v. *Verity,* 853 F.2d 322 (5th Cir. 1988), the rule need not address all the threats to the species. As noted by Congress when the Act was initially enacted, ''once an animal is on the threatened list, the Secretary has an almost infinite number of options available to him with regard to the permitted activities for those species. [S]he may, for example, permit taking, but not importation of such species,'' or [s]he may choose to forbid both taking and importation but allow the transportation of such species, as long as the measures will ''serve to conserve, protect, or restore the species concerned in accordance with the purposes of the Act'' (H.R. Rep. No. 412, 93rd Cong., 1st Sess. 1973).

Section 9 prohibitions make it illegal for any person subject to the jurisdiction of the United States to take (including harass, harm, pursue, shoot, wound, kill, trap, capture, or collect; or attempt

any of these), import or export, ship in interstate commerce in the course of commercial activity, or sell or offer for sale in interstate or foreign commerce any wildlife species listed as an endangered species, without written authorization. It also is illegal under section 9(a)(1) of the Act to possess, sell, deliver, carry, transport, or ship any such wildlife that is taken illegally. Prohibited actions consistent with section 9 of the Act are outlined for threatened species in 50 CFR 17.31(a) and (b). This proposed 4(d) special rule proposes that all prohibitions in 50 CFR 17.31(a) and (b) will apply to the lesser prairie-chicken, except in two instances.

First, we propose that none of the provisions in 50 CFR 17.31 would apply to actions that result from activities associated with a comprehensive conservation program developed by or in coordination with the State agency or agencies responsible for the management and conservation of fish and wildlife within the affected State(s), or their agent(s), and that the Service determines provides a net conservation benefit for the lesser prairie-chicken. The 4(d) special rule identifies a set of criteria the Service proposes to use to evaluate such programs. Among additional considerations, the approval criteria require that the program provides lesser prairie-chicken population and habitat targets necessary to ensure a net conservation benefit for the species across the plan area in addition to mechanisms for achieving those targets. In this way, actions in the comprehensive conservation program will ultimately contribute to the conservation of the species. Conservation is defined in section 3(3) of the Act as ''to use and the use of all methods and procedures which are necessary to bring any endangered species or threatened species to the point at which the measures provided pursuant to the Act are no longer necessary.'' As a result of this provision, the Service expects that rangewide conservation actions will be implemented with a high level of certainty that the program will lead to the long-term conservation of the lesser prairie-chicken.

Second, we also propose that none of the provisions in 50 CFR 17.31 would apply to actions resulting from activities that are included in or covered under NRCS's Lesser Prairie-Chicken Initiative (LPCI). According to the proposed rule, the primary factors supporting the proposed threatened status for the lesser prairie-chicken are the impacts of cumulative habitat loss and fragmentation. Allowing the continuation of agricultural operations consistent with these criteria encourages landowners to continue managing the remaining landscape in ways that meet the needs of their operation while simultaneously providing suitable habitat for the lesser prairie-chicken.

Based on the rationale explained above, the provisions included in this proposed 4(d) special rule are necessary and advisable to provide for the conservation of the lesser prairie-chicken. Nothing in this proposed 4(d) special rule changes in any way the recovery planning provisions of section 4(f) and consultation requirements under section 7 of the Act or the ability of the Service to enter into partnerships for the management and protection of the lesser prairie-chicken.

Additional Provisions Under Consideration

The Service is considering several additional provisions and specifically seeks information and comment on the following issues at this time.

First, several approved candidate conservation agreements (CCAs) and candidate conservation agreements with assurances (CCAAs) are in place for the lesser prairie-chicken. We are seeking comment on a provision that would allow continued enrollment in the existing CCAs and CCAAs beyond the effective date of a final listing determination, if the results of our final listing determination conclude that threatened species status is appropriate. The approved agreements for the lesser prairie-chicken include the CCA/CCAA for Lesser Prairie-Chicken and Sand Dune Lizard in New Mexico, developed cooperatively by the Service, the Bureau of Land Management, and the Center for Excellence for Hazardous Materials Management (2008); the Agricultural CCAA for Lesser Prairie-Chickens between Oklahoma Department of Wildlife Conservation and the Service (2013); and the CCAA for Lesser Prairie-Chickens Between Texas Parks and Wildlife Department and the Service (2006).

The Service is also considering whether it is appropriate to include a provision for take of lesser prairie-chicken when that take is in accordance with applicable State law for educational or scientific purposes, the enhancement of propagation or survival of the species, zoological exhibition, and other conservation purposes consistent with the Act. An example of an activity that could be covered under such a provision includes presence/absence and population monitoring surveys. Such surveys are typically conducted during the breeding season and may cause disturbance on the breeding grounds, particularly when flush counts are used to estimate the number of birds attending those leks. Occasionally recorded calls are used to aid in the detection of known or suspected leks, which may cause some disturbance of courting males. However, if surveys are conducted in accordance with scientifically accepted methodologies, minimal short-term impact to lesser prairie-chickens, primarily in the form of harassment, should occur.

The Service is also considering whether it is appropriate to include a provision for take of lesser prairie-chickens in the course of State-managed hunting programs for the lesser prairie-chicken or incidental to legal hunting activities directed at greater prairie-chickens. These two species, which are similar in appearance, overlap in portions of approximately 12 counties in Kansas. Limited mortality of lesser prairie-chickens occurs as a result of hunting activities directed at greater prairie-chickens. We request information and comment on these issues, including State management plans related to hunting regulations and any measures within those plans that may avoid or minimize the risk of lesser prairie-chicken mortality from hunting for greater prairie-chickens.

Finally, the Service is also considering whether it is appropriate to expand the scope of the 4(d) special rule to: (a) Encourage landowners removing their lands from the Conservation Reserve Program to continue managing those areas for the benefit of the lesser prairie-chicken; (b) encourage farmers and ranchers not participating in the Natural Resources Conservation Service's Lesser Prairie-Chicken Initiative to manage their lands for the benefit of the lesser prairie-chicken; and (c) allow incidental take of lesser prairie-chickens if the take results from implementation of a comprehensive lesser prairie-chicken conservation program that was developed by an entity other than a State agency or their agent(s) or was developed without coordination with a State agency or their agent(s).

Peer Review

In accordance with our joint policy published in the **Federal Register** on July 1, 1994 (59 FR 34270), we will seek the expert opinions of at least three appropriate and independent specialists regarding this proposed rule. The purpose of such review is to ensure that our determination of status for this species is based on scientifically sound data, assumptions, and analyses. We will send peer reviewers copies of this

proposed rule immediately following publication in the **Federal Register**. We will invite these peer reviewers to comment, during the reopening of the public comment period, on our use and interpretation of the science used in developing our proposed rule to list the lesser prairie-chicken and this proposed 4(d) special rule.

We will consider all comments and information we receive during the comment period on this proposed rule during preparation of a final rulemaking. Accordingly, the final decision may differ from this proposal.

Required Determinations

Clarity of the Rule

We are required by Executive Orders 12866 and 12988 and by the Presidential Memorandum of June 1, 1998, to write all rules in plain language. This means that each rule we publish must: (a) Be logically organized; (b) use the active voice to address readers directly; (c) use clear language rather than jargon; (d) be divided into short sections and sentences; and (e) use lists and tables wherever possible.

If you feel that we have not met these requirements, send us comments by one of the methods listed in **ADDRESSES**. To better help us revise the proposed rule, your comments should be as specific as possible. For example, you should tell us the numbers of the sections or paragraphs that are unclearly written, which sections or sentences are too long, the sections where you feel lists or tables would be useful, etc.

Paperwork Reduction Act of 1995 (44 U.S.C. 3501, et seq.)

This rule does not contain any new collections of information that require approval by the Office of Management and Budget (OMB) under the Paperwork Reduction Act. This rule will not impose recordkeeping or reporting requirements on State or local governments, individuals, businesses, or organizations. An agency may not conduct or sponsor, and a person is not required to respond to, a collection of information unless it displays a currently valid OMB control number.

National Environmental Policy Act (42 U.S.C. 4321 et seq.)

We have determined that environmental assessments and environmental impact statements, as defined under the authority of the National Environmental Policy Act of 1969, need not be prepared in connection with listing a species as an endangered or threatened species under the Endangered Species Act. We published a notice outlining our reasons for this determination in the **Federal Register** on October 25, 1983 (48 FR 49244). We intend to incorporate this proposed special rule into our final determination concerning the listing of the species or withdrawal of the proposal if new information is provided that supports that decision.

Government-to-Government Relationship With Tribes

In accordance with the President's memorandum of April 29, 1994 (Government-to-Government Relations with Native American Tribal Governments; 59 FR 22951), Executive Order 13175 (Consultation and Coordination with Indian Tribal Governments), and the Department of the Interior's manual at 512 DM 2, we readily acknowledge our responsibility to communicate meaningfully with recognized Federal Tribes on a government-to-government basis. In accordance with Secretarial Order 3206 of June 5, 1997 (American Indian Tribal Rights, Federal-Tribal Trust Responsibilities, and the Endangered Species Act), we readily acknowledge our responsibilities to work directly with tribes in developing programs for healthy ecosystems, to acknowledge that tribal lands are not subject to the same controls as Federal public lands, to remain sensitive to Indian culture, and to make information available to tribes.

By letter dated April 19, 2011, we contacted known tribal governments throughout the historical range of the lesser prairie-chicken. We sought their input on our development of a proposed rule to list the lesser prairie-chicken and encouraged them to contact the Oklahoma Ecological Services Field Office if any portion of our request was unclear or to request additional information. We did not receive any comments regarding this request.

References Cited

A complete list of all references cited in this proposed rule is available on the Internet at *http://www.regulations.gov* at Docket No. FWS–R2–ES–2012–0071 or upon request from the Field Supervisor, Oklahoma Ecological Services Field Office (see **FOR FURTHER INFORMATION CONTACT**).

Authors

The primary authors of this proposed rule are the staff members of the Oklahoma Ecological Services Field Office (see **FOR FURTHER INFORMATION CONTACT**).

List of Subjects in 50 CFR Part 17

Endangered and threatened species, Exports, Imports, Reporting and recordkeeping requirements, and Transportation.

Proposed Regulation Promulgation

Accordingly, we propose to further amend part 17, subchapter B of chapter I, title 50 of the Code of Federal Regulations, as proposed to be amended at 77 FR 73828 (December 11, 2012) as follows:

PART 17—[AMENDED]

■ 1. The authority citation for part 17 continues to read as follows:

Authority: 16 U.S.C. 1361–1407; 1531–1544; 4201–4245; unless otherwise noted.

■ 2. Amend § 17.11(h) by adding an entry for ''Prairie-chicken, lesser'' to the List of Endangered and Threatened Wildlife in alphabetical order under Birds to read as set forth below:

§ 17.11 Endangered and threatened wildlife.

* * * * *

(h) * * *

Species		Historic range	Vertebrate population where endangered or threatened	Status	When listed	Critical habitat	Special rules
Common name	Scientific name						
*	*	*	*	*	*		*
BIRDS							

Species		Historic range	Vertebrate population where endangered or threatened	Status	When listed	Critical habitat	Special rules
Common name	Scientific name						
*	*	*	*	*	*		*
Prairie-chicken, lesser	(*Tympanuchus pallidicinctus*).	U.S.A. (CO, KS, NM, OK, TX).	Entire	T	.....	NA	17.41(a)
*	*	*	*	*	*		*

■ 3. Amend § 17.41 by adding paragraph (a) to read as follows:

§ 17.41 Special rules—birds.

(a) Lesser prairie-chicken (*Tympanuchus pallidicinctus*).

(1) *Prohibitions.* Except as noted in paragraphs (a)(2)(i) and (a)(2)(ii) of this section, all prohibitions and provisions of §§ 17.31 and 17.32 apply to the lesser prairie-chicken.

(2) *Exemptions from prohibitions.* Incidental take of the lesser prairie-chicken will not be considered a violation of section 9 of the Act if the take results from any of the following:

(i) Implementation of a comprehensive lesser prairie-chicken conservation program that:

(A) Was developed by or in coordination with the State agency or agencies, or their agent(s), responsible for the management and conservation of fish and wildlife within the affected State(s);

(B) Has a clear mechanism for enrollment of participating landowners; and

(C) Was determined by the Service to provide a net conservation benefit to the lesser prairie chicken, in consideration of the following:

(1) Comprehensively addresses all of the threats affecting the lesser prairie-chicken within the program area;

(2) Establishes objective, measurable biological goals and objectives for population and habitat necessary to ensure a net conservation benefit, and provides the mechanisms by which those goals and objectives will be achieved;

(3) Includes the administrative and funding mechanisms necessary for effectively implementing all elements of the program, including enrollment of participating landowners, monitoring of program activities, and enforcement of program requirements;

(4) Employs an adaptive management strategy to ensure future program adaptation as necessary and appropriate; and

(5) Includes appropriate monitoring of effectiveness and compliance.

(D) Is periodically reviewed by the Service as meeting the objective for which it was originally established under paragraph (a)(2)(i)(B) of this section.

(ii) Conservation practices on privately owned agricultural land which:

(A) Are carried out in accordance with a conservation plan for such land developed by the Natural Resources Conservation Service (NRCS); and

(B) Were evaluated in the June 30, 2011, conference report issued by the Service to the NRCS in connection with the NRCS's Lesser Prairie-Chicken Initiative.

* * * * *

Dated: April 29, 2013.

Daniel M. Ashe,

Director, Fish and Wildlife Service.

[FR Doc. 2013–10497 Filed 5–3–13; 8:45 am]

BILLING CODE 4310–55–P

DEPARTMENT OF THE INTERIOR

Fish and Wildlife Service

50 CFR Part 17

[Docket No. FWS–R6–ES–2012–0053; Docket No. FWS–R6–ES–2013–0020; 4500030114]

RIN 1018–AY11; 1018–AZ39

Endangered and Threatened Wildlife and Plants; Proposed Threatened Status for Coral Pink Sand Dunes Tiger Beetle and Designation of Critical Habitat

AGENCY: Fish and Wildlife Service, Interior.

ACTION: Proposed rule; reopening of the comment period.

SUMMARY: We, the U.S. Fish and Wildlife Service, announce the reopening of the public comment period on our October 2, 2012, proposed listing decision and proposed designation of critical habitat for Coral Pink Sand Dunes tiger beetle under the Endangered Species Act of 1973, as amended. We announce the availability of a draft economic analysis (DEA), a draft environmental assessment (EA), an amendment to the 2009 Conservation Agreement and Strategy for the Coral Pink Sand Dunes tiger beetle, and an amended required determinations section of the proposal. We also announce the availability of 2012 Coral Pink Sand Dunes tiger beetle survey results that were not available when the proposed rule was being written. We are reopening the comment period to allow all interested parties an opportunity to comment simultaneously on the proposed rule, the associated DEA, the Draft EA, the Conservation Agreement amendment, and the amended required determinations section. We also announce a public hearing to be held in Kanab, Utah.

DATES: *Written Comments:* We will consider all comments received or postmarked on or before June 5, 2013. Comments submitted electronically using the Federal eRulemaking Portal (see **ADDRESSES** section, below) must be received by 11:59 p.m. Eastern Time on the closing date.

Public Information Meeting: We will hold a public information meeting in Kanab, Utah, on May 22, 2013, from 4 p.m. to 6 p.m. (see **ADDRESSES** section, below).

Public Hearing: We will hold a public hearing in Kanab, Utah, on May 22, 2013, from 7 p.m. to 9 p.m. (see **ADDRESSES** section, below).

ADDRESSES: *Document Availability:* You may obtain copies of the proposed rule on the Internet at *http://www.regulations.gov* at Docket No. FWS–R6–ES–2012–0053 or by contacting the U.S. Fish and Wildlife Service, Utah Field Office, Ecological Services Field Office directly (see **FOR FURTHER INFORMATION CONTACT**). You may obtain a copy of the draft economic analysis (DEA), the draft environmental assessment (Draft EA), the 2009 Conservation Agreement and Strategy for the Coral Pink Sand Dunes tiger beetle (Conservation Agreement) amendment, and the 2012 Coral Pink Sand Dunes tiger beetle survey results at

http://www.regulations.gov at Docket Number FWS–R6–ES–2013–0020, or by contacting the U.S. Fish and Wildlife Service, Utah Field Office, Ecological Services Field Office directly (see **FOR FURTHER INFORMATION CONTACT**).

Written Comments: You may submit comments by one of the following methods:

(1) *Electronically:* Go to the Federal eRulemaking Portal: *http://www.regulations.gov.* Submit comments on the listing proposal to Docket No. FWS–R6–ES–2012–0053, and submit comments on the critical habitat proposal and associated DEA and Draft EA to Docket No. FWS–R6–ES–2013–0020. See **SUPPLEMENTARY INFORMATION** for an explanation of the two dockets.

(2) *By hard copy:* Submit comments on the listing proposal by U.S. mail or hand-delivery to: Public Comments Processing, Attn: FWS–R6–ES–2012–0053; Division of Policy and Directives Management; U.S. Fish and Wildlife Service; 4401 N. Fairfax Drive, MS 2042–PDM; Arlington, VA 22203. Submit comments on the critical habitat proposal, DEA, and Draft EA by U.S. mail or hand-delivery to: Public Comments Processing, Attn: FWS–R6–ES–2013–0020; Division of Policy and Directives Management; U.S. Fish and Wildlife Service; 4401 N. Fairfax Drive, MS 2042–PDM; Arlington, VA 22203.

(3) *Public Information Meeting and Public Hearing:* Both the public information meeting and the public hearing will be held at the Kanab City Library, 374 North Main, Kanab, Utah 84741.

We request that you send comments only by the methods described above. We will post all comments on *http://www.regulations.gov.* This generally means that we will post any personal information you provide us (see the Public Comments section below for more information).

FOR FURTHER INFORMATION CONTACT: Larry Crist, Field Supervisor, U.S. Fish and Wildlife Service, Utah Field Office, Ecological Services Field Office, 2369 West Orton Circle, Suite 50, West Valley City, Utah 84119; telephone 801–975–3330; or facsimile 801–975–3331. Persons who use a telecommunications device for the deaf (TDD) may call the Federal Information Relay Service (FIRS) at 800–877–8339.

SUPPLEMENTARY INFORMATION:

Public Comments

We will accept written comments and information during this reopened comment period on: (1) Our proposed listing as threatened and proposed critical habitat designation for Coral Pink Sand Dunes tiger beetle that was published in the **Federal Register** on October 2, 2012 (77 FR 60208); (2) our DEA of the proposed designation; (3) our Draft EA; (4) the Conservation Agreement amendment; (5) 2012 Coral Pink Sand Dunes tiger beetle surveys and how this information should be considered in the designation of critical habitat; and (6) our amendment of required determinations. We will consider information and recommendations from all interested parties. We are also notifying the public that we will publish two separate rules for the final listing determination and the final critical habitat determination for the Coral Pink Sand Dunes tiger beetle. The final listing rule will publish under the existing Docket No. FWS–R6–ES–2012–0053, and the final critical habitat designation will publish under Docket No. FWS–R6–ES–2013–0020.

We request that you provide comments specifically on our listing determination under Docket No. FWS–R6–ES–2012–0053.

We request that you provide comments specifically on the critical habitat determination and related DEA and Draft EA under Docket No. FWS–R6–ES–2013–0020. We are particularly interested in comments concerning:

(1) The reasons why we should or should not designate habitat as ''critical habitat'' under section 4 of the Act (16 U.S.C. 1531 *et seq.*) including whether there are threats to these species from human activity, the degree of which can be expected to increase due to the designation, and whether that increase in threat outweighs the benefit of designation such that the designation of critical habitat may not be prudent;

(2) Specific information on:

(a) The amount and distribution of Coral Pink Sand Dunes tiger beetle habitat;

(b) What areas that are occupied and that contain features essential to the conservation of this species should be included in the designation and why;

(c) Special management considerations or protection that may be needed in the critical habitat area we are proposing, including managing for the potential effects of climate change;

(d) What areas not occupied at the time of listing are essential for the conservation of these species and why; and

(e) Means to quantify the amount of natural and human-caused disturbance this species prefers or can tolerate.

(3) Land use designations and current or planned activities in the subject area and their possible impacts on proposed critical habitat.

(4) Information on the projected and reasonably likely impacts of climate change on the Coral Pink Sand Dunes tiger beetle and proposed critical habitat.

(5) Any probable economic, national security, or other relevant impacts of designating any area that may be included in the final designation; in particular, any impacts on small entities or families, and the benefits of including or excluding areas that exhibit these impacts.

(6) Whether any specific areas we are proposing for critical habitat designation should be considered for exclusion under section 4(b)(2) of the Act, and whether the benefits of potentially excluding any specific area outweigh the benefits of including that area under section 4(b)(2) of the Act.

(7) Whether our approach to designating critical habitat could be improved or modified in any way to provide for greater public participation and understanding, or to better accommodate public concerns and comments.

(8) Information on the extent to which the description of potential economic impacts in the DEA is complete and accurate.

(9) Whether the DEA makes appropriate assumptions regarding current practices and any regulatory changes that will likely occur if we designate critical habitat.

(10) Whether the DEA correctly assesses the effect of regional costs associated with land use controls that may result from the designation of critical habitat.

(11) Whether the DEA identifies all Federal, State, and local costs and benefits attributable to the proposed designation of critical habitat, and information on any costs that have been inadvertently overlooked.

(12) Whether the Draft EA adequately presents the purpose of and need for the proposed action, the proposed action and alternatives, and the evaluation of the direct, indirect, and cumulative effects of the alternatives.

(13) Whether the amended Conservation Agreement for the Coral Pink Sand Dunes tiger beetle provides sufficient conservation measures to reduce threats to the species.

You may submit your comments and materials concerning our proposed rule or the associated DEA and draft EA by one of the methods listed in **ADDRESSES**.

If you submit a comment via *http://www.regulations.gov,* your entire comment—including your personal identifying information—will be posted on the Web site. If you submit a hardcopy comment that includes

personal identifying information, you may request at the top of your document that we withhold this information from public review. However, we cannot guarantee that we will be able to do so. We will post all hardcopy comments on *http://www.regulations.gov.*

Comments and materials we receive, as well as supporting documentation we used in preparing this proposed rule, DEA, and Draft EA, will be available for public inspection on *http://www.regulations.gov* at Docket No. FWS–R6–ES–2012–0053 and Docket No. FWS–R6–ES–2013–0020, or by appointment, during normal business hours, at the U.S. Fish and Wildlife Service, Utah Ecological Services Office (see **FOR FURTHER INFORMATION CONTACT**). You may obtain copies of the proposed critical habitat, the DEA, the Conservation Agreement amendment, and the Draft EA on the Internet at *http://www.regulations.gov* at Docket No. FWS–R6–ES–2012–0053 and Docket No. FWS–R6–ES–2013–0020, or at *http://www.fws.gov/mountain-prairie/species/invertebrates/CoralPinkSandDunesTigerBeetle/index.html,* or by mail from the Utah Ecological Services Office (see **FOR FURTHER INFORMATION CONTACT**).

Background

Previous Federal Actions

It is our intent to discuss only those topics directly relevant to the proposed designation of critical habitat for the Coral Pink Sand Dunes tiger beetle and our consideration of the Conservation Agreement amendment relative to the proposed listing rule. For more information on previous Federal actions and the biology of the Coral Pink Sand Dunes tiger beetle, refer to the proposed listing rule and proposed designation of critical habitat published in the **Federal Register** on October 2, 2012 (77 FR 60208), which is available online at *http://www.regulations.gov* (at Docket No. FWS–R6–ES–2012–0053 or Docket No. FWS–R6–ES–2013–0020).

In total, we proposed approximately 921 hectares (ha) (2,276 acres (ac)) in Kane County, Utah, for designation as critical habitat in our October 2, 2012, proposed rule. However, the 2012 Coral Pink Sand Dunes tiger beetle surveys found beetle adults and larvae in habitat adjacent to the proposed critical habitat area (Knisley and Gowan 2013, pp. 12–13). Therefore, based on the availability of this new information, we request that the public review this data and provide input on how it might be considered for the designation of critical habitat (see 2012 Survey Information, below).

The original proposal had a 60-day public comment period, ending November 16, 2012. We will publish in the **Federal Register** a final listing decision and final critical habitat designation for the Coral Pink Sand Dunes tiger beetle on or before the statutory deadline of October 2, 2013.

Section 3 of the Act defines critical habitat as the specific areas within the geographical area occupied by the species, at the time it is listed in accordance with the Act, on which are found those physical or biological features essential to the conservation of the species and that may require special management considerations or protection; and specific areas outside the geographical area occupied by the species at the time it is listed upon a determination that such areas are essential for the conservation of the species. If the proposed rule is made final, section 7 of the Act will prohibit destruction or adverse modification of critical habitat by any activity funded, authorized, or carried out by any Federal agency. Federal agencies proposing actions that affect critical habitat must consult with us on the effects of their proposed actions, under section 7(a)(2) of the Act.

Our October 2, 2012, proposed rule evaluated the 2009 Conservation Agreement for the Coral Pink Sand Dunes tiger beetle. The 2009 Conservation Agreement resulted in the establishment of two Conservation Areas that protect the Coral Pink Sand Dunes tiger beetle from off-road vehicle use. Based on new survey information, we have worked with the State of Utah and Bureau of Land Management to amend the 2009 Conservation Agreement and expand the protected habitats for the species (see Conservation Agreement Amendment, below). We are seeking public comment on this amendment, including whether it provides sufficient conservation measures to reduce threats to the species to the point it does not meet the definition of threatened or endangered under the Act.

Consideration of Impacts Under Section 4(b)(2) of the Act

Section 4(b)(2) of the Act requires that we designate or revise critical habitat based upon the best scientific data available, after taking into consideration the economic impact, impact on national security, or any other relevant impact of specifying any particular area as critical habitat. We may exclude an area from critical habitat if we determine that the benefits of excluding the area outweigh the benefits of including the area as critical habitat, provided such exclusion will not result in the extinction of the species.

When considering the benefits of inclusion for an area, we consider the additional regulatory benefits that the area would receive from the protection from adverse modification or destruction as a result of actions with a Federal nexus (activities conducted, funded, permitted, or authorized by Federal agencies), the educational benefits of mapping areas containing essential features that aid in the recovery of the listed species, and any benefits that may result from the designation due to State or Federal laws that may apply to critical habitat.

When considering the benefits of exclusion, we consider, among other things, whether exclusion of a specific area is likely to result in conservation; the continuation, strengthening, or encouragement of partnerships; or implementation of a management plan.

In the case of the Coral Pink Sand Dunes tiger beetle, the benefits of critical habitat designation include public awareness of the presence of these species and the importance of habitat protection, and, where a Federal action exists, increased habitat protection for these species due to protection from adverse modification or destruction of critical habitat. In practice, situations with a Federal action occur primarily on Federal lands or for projects implemented, funded, or permitted by Federal agencies.

The final decision on whether to exclude any areas will be based on the best scientific data available at the time of the final designation, including information obtained during the comment period and information about the economic impact of designation. Accordingly, we have prepared a DEA concerning the economic effects of the proposed critical habitat designation, which is available for review and comment (see **ADDRESSES**).

Draft Economic Analysis

The purpose of the DEA is to identify and analyze the potential economic impacts associated with the proposed critical habitat designation for the Coral Pink Sand Dunes tiger beetle. The DEA also describes the economic impacts of all potential conservation efforts for the Coral Pink Sand Dunes tiger beetle. Some of these costs will likely be incurred regardless of whether or not we designate critical habitat.

The economic impact of the proposed critical habitat designation is analyzed by comparing scenarios both ''with critical habitat'' and ''without critical habitat.'' The ''without critical habitat'' scenario represents the baseline for the

analysis, considering protections already in place for the species (e.g., under the Federal listing and other Federal, State, and local regulations). Therefore, the baseline represents the costs incurred regardless of whether critical habitat is designated. The ''with critical habitat'' scenario describes the incremental impacts associated specifically with the designation of critical habitat for the species. The incremental conservation efforts and associated impacts are those not expected to occur absent the designation of critical habitat for the species. In other words, the incremental costs are those attributable solely to the designation of critical habitat above and beyond the baseline costs; these are the costs we may consider in the final designation of critical habitat. The analysis looks at baseline impacts incurred as a result of the species listing, and forecasts both baseline and incremental impacts likely to occur if we finalize the proposed critical habitat designation.

In light of the 10th Circuit U.S. Court of Appeals ruling in *New Mexico Cattle Growers Association* v. *United States Fish and Wildlife Service,* the DEA also considers the coextensive cost impacts of the critical habitat's protection. Coextensive impacts include the baseline impacts, which are a result of the listing, and incremental impacts, which are solely attributable to the designation of critical habitat.

The DEA provides estimated costs of the foreseeable potential economic impacts of the proposed critical habitat designation for the Coral Pink Sand Dunes tiger beetle over the next 20 years, which was determined to be the appropriate period for analysis because planning information was available for most activities to reasonably forecast activity levels for projects for a 20-year timeframe. The DEA identifies potential incremental costs as a result of the proposed critical habitat designation; these are the costs attributed to critical habitat over and above those baseline costs attributed to listing. The DEA quantifies economic impacts of conservation efforts for the Coral Pink Sand Dunes tiger beetle associated with the following categories of activity: (1) Bureau of Land Management Kanab Field Office Resource Management Plan administration; (2) off-road vehicle (ORV) related consumer surplus losses (i.e., economic measure of consumer satisfaction—ORV restrictions might result in some consumers feeling like they were not receiving sufficient recreational enjoyment for the expenses of traveling to and staying in the area); (3) consultation on a Coral Pink Sand Dunes State Park incidental take permit; (4) other management activities; and (5) conservation activities.

The proposed critical habitat designation for the Coral Pink Sand Dunes tiger beetle will result in minimal incremental costs because the proposed critical habitat is occupied by the species or likely used as a dispersal corridor between occupied habitats and we would expect costs beyond those attributable to the species listing (baseline costs) to be minimal (see discussion below). Furthermore, the baseline protections afforded by existing conservation activities partially address ORV use, which is one of the primary threats to the species and its habitat (77 FR 60208). Table 1 summarizes the coextensive economic impacts of the proposed listing and critical habitat.

Coextensive impacts to economic activities are anticipated to be associated primarily with the administrative costs of Section 7 consultations, development of incidental take permits, and consumer surplus losses from anticipated ORV restrictions in the Coral Pink Sand Dunes State Park. The cost of these impacts is estimated to be approximately $225,298 over the next 20 years, at an annualized cost of $13,416. Costs associated with conservation activities that are indirectly attributable to the listing are projected to be $538,441 (Table 1). In addition, ORV visitors to BLM land adjacent to the State Park would potentially lose consumer surplus, but these costs are unquantified because of a lack of reliable visitation data. Additional information can be found in the DEA, which is available at *http://www.regulations.gov* at Docket No. FWS–R6–ES–2013–0020 and at *http://www.fws.gov/mountain-prairie/species/invertebrates/CoralPinkSandDunesTigerBeetle/index.html.*

TABLE 1—SUMMARY OF COEXTENSIVE IMPACTS TO ECONOMIC ACTIVITIES OVER THE NEXT 20 YEARS (INCLUDING A 7 PERCENT DISCOUNT RATE) PERTAINING TO CRITICAL HABITAT DESIGNATION FOR THE CORAL PINK SAND DUNES TIGER BEETLE

	Economic activities				Conservation activities	Total coextensive
	Reinitiation of BLM RMP	OHV-Related consumer surplus losses	State park incidental take permit	Other management activities		
Undiscounted	$29,655	$275,698	$2,263	$73,000	$950,000	$1,330,616
Net Present Vaule @ 7%	25,400	156,260	[a] 2,263	41,375	538,441	763,738
Average Annual Discounted Cost	1,270	7,813	[a] 2,263	2,069	26,922	40,337

[a] Undiscounted because the action is expected to take place in 2013.

Incremental costs associated with the designation of critical habitat are expected to be minimal. Designation of critical habitat for the Coral Pink Sand Dunes tiger beetle is not likely to result in additional consultations since the proposed designated critical habitat unit is occupied. Therefore, actions that would affect critical habitat would also affect the species present in the occupied Unit of critical habitat. However, the designation of critical habitat would result in direct incremental administrative costs to address adverse modification analyses, although these would be minimal. With no critical habitat designated outside the Coral Pink Sand Dunes habitat range, all indirect conservation costs or benefits are considered part of the baseline. No additional project modifications are expected relative to the baseline. Costs associated with reinitiating consultations will also be considered part of the baseline.

We are seeking data and comments from the public on the DEA. We may revise the proposed rule or supporting documents to incorporate or address information we receive during the public comment period. In particular, we may exclude an area from critical habitat if we determine that the benefits of excluding the area outweigh the benefits of including the area, provided

the exclusion will not result in the extinction of the species.

Draft Environmental Assessment; National Environmental Policy Act

When the range of a species includes States within the U.S. Tenth Circuit Court of Appeals, pursuant to the ruling in *Catron County Board of Commissioners* v. *U.S. Fish and Wildlife Service,* 75 F .3d 1429 (10th Cir. 1996), we will complete an analysis under the National Environmental Policy Act of 1969 (42 U.S.C. 4321 *et seq.*) (NEPA) on critical habitat designations. The range of Coral Pink Sand Dunes tiger beetle is entirely within the State of Utah, which is within the Tenth Circuit.

The Draft EA presents the purpose of and need for critical habitat designation, the proposed action and alternatives, and an evaluation of the direct, indirect, and cumulative effects of the alternatives under the requirements of NEPA as implemented by the Council on Environmental Quality regulations (40 CFR 1500 through 1518) and according to the Department of the Interior's NEPA procedures.

The Draft EA will be used by the Service to decide whether or not critical habitat will be designated as proposed; if the proposed action requires refinement, or if another alternative is appropriate; or if further analyses are needed through preparation of an environmental impact statement. If the proposed action is selected as described (or is changed minimally) and no further environmental analyses are needed, then a Finding of No Significant Impact (FONSI) would be the appropriate conclusion of this process. A FONSI would then be prepared for the environmental assessment. We are seeking data and comments from the public on the draft EA, which is available at *http://www.regulations.gov* at Docket No. FWS–R6–ES–2013–0020 and at *http://www.fws.gov/mountain-prairie/species/invertebrates/CoralPinkSandDunesTigerBeetle/index.html.*

2012 Survey Information

A survey for Coral Pink Sand Dunes tiger beetle was conducted south of Conservation Area A in 2012, and we request that the public review this data and provide input on how it is considered for the designation of critical habitat (Knisley and Gowan 2013, entire). Researchers found a total of 16 adults and 13 larvae singly or in small numbers throughout the area directly south of Conservation Area A (Knisley and Gowan 2013, pp. 12–13). Large numbers of adult tiger beetles were also found in this area in earlier years (1998–2000) (Knisley and Gowan 2013, pp. 12–13), but this area was not included in our October 2, 2012, proposed critical habitat designation because beetles were generally not observed there for a decade. As described in our October 2, 2012, proposed rule, the area supports the following primary constituent elements: (1) Elevations from 5,610 to 6,857 feet (1,710 to 2,090 meters); (2) appropriate levels of moisture and compaction to allow for burrowing (greater than 3 percent); and (3) vegetative cover of 23–57 percent that allows for ovipositing, adult thermoregulation, and abundant prey (77 FR 60208). Portions of this area are also included in the Conservation Agreement amendment (see Conservation Agreement Amendment, below). We seek comments from the public on the survey results, which are available at *http://www.regulations.gov* at Docket No. FWS–R6–ES–2013–0020 and at *http://www.fws.gov/mountain-prairie/species/invertebrates/CoralPinkSandDunesTigerBeetle/index.html.*

Conservation Agreement Amendment

Initially formalized in 1997 (Conservation Committee 1997, entire), and revised in 2009 (Conservation Committee 2009, entire), the Conservation Agreement for the Coral Pink Sand Dunes Tiger Beetle is a partnership for the development and implementation of conservation measures to protect the tiger beetle and its habitat. The purpose of the partnership is to ensure the long-term persistence of the Coral Pink Sand Dunes tiger beetle within its historical range and provide a framework for future conservation efforts. The Utah Department of Natural Resources, Division of Parks and Recreation, Bureau of Land Management (BLM), U.S. Fish and Wildlife Service, and Kane County, Utah, are signatories to these agreements and comprise the conservation committee. The conservation committee has implemented conservation actions to benefit the Coral Pink Sand Dunes tiger beetle and its habitat, monitored their effectiveness, and adapted strategies as new information became available. Coordination under the Conservation Agreement resulted in the establishment of two Conservation Areas that protect the Coral Pink Sand Dunes tiger beetle from ORV use—Conservation Areas A and B (see our proposed rule (77 FR 60208, October 2, 2012) for more information on these Conservation Areas).

On March 21, 2013, signatories to the Conservation Agreement signed an amendment (Amendment to the 2009 Conservation Agreement and Strategy for the Coral Pink Sand Dunes Tiger Beetle (*Cicindela albissima*)) (Conservation Committee 2013, entire) to the 2009 Conservation Agreement that outlines several new conservation actions that will be enacted to address the threats that were identified in the October 2, 2012, proposed rule (77 FR 60208). The amendment evaluates the most recent tiger beetle survey information (Knisley and Gowan 2013, entire; see 2012 Survey Information, above) and concludes that modifications to the boundaries of the Conservation Areas are needed to ensure continued protection of the tiger beetle from ongoing threats (see below description of threats). The amendment enlarges Conservation Area A by 29 percent from 84 to 108 ha (207 to 266 ac). The expansion of Conservation Area A protects 88 percent of the species' population from ORV use. In addition, the amendment provides protection for islands of habitat between Conservation Areas A and B (an additional 106 ha (263 ac)), with the intent of providing dispersal habitat for the species.

Overall, the Conservation Agreement amendment addresses the following threats to the Coral Pink Sand Dunes tiger beetle: (1) Habitat loss and degradation caused by off-road vehicle use; (2) small population effects, such as vulnerability to random chance events; (3) the effects of climate change and drought; and (4) cumulative interaction of individual factors such as off-road vehicle use, climate change, and drought (77 FR 60208, October 2, 2012) (Table 3). Additional information can be found in the Conservation Agreement amendment, which can be obtained as specified at the beginning of this document (see **ADDRESSES:** *Document Availability*).

TABLE 2—THREATS TO THE CORAL PINK SAND DUNES TIGER BEETLE AS IDENTIFIED IN THE OCTOBER 2, 2012, PROPOSED LISTING DECISION AND PROPOSED DESIGNATION OF CRITICAL HABITAT, AND PLANNED ACTIONS TO ADDRESS THOSE THREATS THROUGH THE CONSERVATION AGREEMENT AND STRATEGY AMENDMENT

Threat	Planned action
Habitat loss/degradation and mortality associated with ORV use.	• Utah Department of Natural Resources, Division of Parks and Recreation agrees to expand the boundary of Conservation Area A to protect additional habitat while addressing diversity in recreation and maintaining safety standards for dune visitors. This area will be expanded in the 2013 field season from 84 to 108 ha (207 to 266 ac), thus increasing protection of tiger beetle occupied swales from 48 percent to 88 percent. All new or expanded habitat areas will be demarcated with carsonite marking posts to facilitate compliance by Park visitors. • Utah Department of Natural Resources, Division of Parks and Recreation and the BLM will protect vegetated habitat islands of connectivity between the southern and northern conservation areas and monitor to ensure compliance. This action will occur in 2013 and will protect 106 ha (263 ac) of additional sand dune habitat comprising 14 individual habitat patches, which range in size from 1 to 15 ha (2.6 to 37 ac). All new or expanded habitat areas will be demarcated with carsonite marking posts to facilitate compliance by Park visitors. • Tiger beetle adults and larvae were found to the south of Conservation Area A in 2012. The conservation committee will visit this area in spring of 2013 to determine any additional habitats that should be protected to support the tiger beetle. The size and configuration of any protected areas will be determined during the 2013 field season with input from all members of the conservation committee. All new or expanded habitat areas will be demarcated with carsonite posts to facilitate compliance by Park visitors. • The conservation committee will analyze available historic aerial imagery and other data to better understand dune movement and associated vegetation changes as they relate to beetle occupation and suitable habitat over time. Knowledge of dune movement patterns will be used in adaptive management planning to accommodate dune changes and the need to alter conservation area boundaries. • The conservation committee will conduct experimental vegetation treatments within existing conservation areas to determine if this activity could be an effective mechanism to increase suitable habitat. • The conservation committee will revisit conservation area boundaries on a routine cycle (every 3 years) and make necessary adjustments as a result of shifting dunes, vegetation changes, population increases and decreases, and resulting changes to suitable habitat. • Utah Department of Natural Resources, Division of Parks and Recreation and the BLM will continue efforts in law enforcement, education, and outreach.
Vulnerability to stochastic events due to small population size.	• We are not aware of any additional populations of Coral Pink Sand Dunes tiger beetles outside of the Coral Pink Sand Dunes geologic feature. However, the conservation committee believes it is appropriate to continue surveys for the species and suitable habitat in the area. The conservation committee will identify potential habitat within an 80-km (50-mi) radius of the Coral Pink Sand Dunes using aerial imagery, and survey for tiger beetle presence and habitat suitability. If appropriate habitat is found, the area will be considered for experimental introduction. • The conservation committee will increase research efforts in experimental translocations in Conservation Area B and evaluate new habitat islands for appropriateness for reintroduction efforts. • The conservation committee will introduce individuals into suitable habitats (potential sites have been identified), monitor these sites, and revise translocation activities via an adaptive management process.
Inadequacy of existing regulatory mechanisms.	• The Utah Department of Natural Resources, Division of Parks and Recreation and the BLM have done a creditable job of enforcing the protection boundaries of Conservation Areas A and B for approximately the last 15 years. This amendment increases the size of Conservation Area A by 24 ha (59 ac), and the conservation committee will consider further protection of habitats to the south of Conservation Area A (see Habitat loss/degradation and mortality associated with ORV use, above). In addition, the amendment establishes 14 habitat patches to support dispersal of tiger beetles between Conservation Areas A and B, increasing the total protected area by an additional 106 ha (263 ac). Because these signatory agencies have complied with the Conservation Agreement and Strategy for the last 15 years, we can reasonably conclude that the BLM and Utah Department of Natural Resources, Division of Parks and Recreation will continue to properly enforce the boundaries of all protected areas.
Climate change and drought.	• The BLM is installing a weather station onsite in spring 2013 to better correlate weather patterns with beetle abundance. Understanding the effects of weather patterns on Coral Pink Sand Dunes tiger beetle populations may help us develop adaptive management strategies by identifying important habitat use areas during particularly warm or dry years. • The establishment of 14 additional habitat patches totaling 106 ha (263 ac) will occur at higher elevations in the sand dune area, and at locations that provide significant vegetated habitat. This effort has the potential to offset the drying and warming effects of climate change and drought on Coral Pink Sand Dunes tiger beetle habitat. In addition these habitat patches will provide dispersal habitat and connectivity between Conservation Areas A and B, which will better allow the tiger beetle to disperse to potentially cooler and wetter habitat that occurs in Conservation Area B.
Cumulative effects of the above.	• Addressing the threats listed above independently will prevent these threats from acting cumulatively.

Required Determinations—Amended

In our October 2, 2012, proposed rule (77 FR 60208), we indicated that we would defer our determination of compliance with several statutes and Executive Orders (EOs) until the information concerning potential economic impacts of the designation and potential effects on landowners and stakeholders became available in the DEA. We have now made use of the DEA data in making these determinations. In this document, we affirm the information in our proposed rule concerning E.O. 12866 (Regulatory Planning and Review), E.O. 12630 (Takings), E.O. 13132 (Federalism), E.O. 12988 (Civil Justice Reform), the Paperwork Reduction Act, E.O. 12866 and E.O. 12988 (Clarity of the Rule), and the President's memorandum of April 29, 1994, ''Government-to-Government Relations with Native American Tribal Governments'' (59 FR 22951). However, based on the DEA data, we are amending our required determinations concerning the Regulatory Flexibility

Act (5 U.S.C. 601 *et seq.*), E.O. 13211 (Energy Supply, Distribution, or Use), and the Unfunded Mandates Reform Act (2 U.S.C. 1501 *et seq.*).

Regulatory Flexibility Act (5 U.S.C. 601 et seq.)

Under the Regulatory Flexibility Act (5 U.S.C. 601 *et seq.,* as amended by the Small Business Regulatory Enforcement Fairness Act of 1996), whenever an agency must publish a notice of rulemaking for any proposed or final rule, it must prepare and make available for public comment a regulatory flexibility analysis that describes the effects of the rule on small entities (i.e., small businesses, small organizations, and small government jurisdictions). However, no regulatory flexibility analysis is required if the head of the agency certifies the rule will not have a significant economic impact on a substantial number of small entities. Based on our DEA of the proposed designation, we provide our analysis for determining whether the proposed rule would result in a significant economic impact on a substantial number of small entities. Based on comments we receive, we may revise this determination as part of our final rulemaking.

According to the Small Business Administration, small entities include small organizations, such as independent nonprofit organizations, and small governmental jurisdictions, including school boards and city and town governments that serve fewer than 50,000 residents, as well as small businesses (13 CFR 121.201). Small businesses include manufacturing and mining concerns with fewer than 500 employees, wholesale trade entities with fewer than 100 employees, retail and service businesses with less than $5 million in annual sales, general and heavy construction businesses with less than $27.5 million in annual business, special trade contractors doing less than $11.5 million in annual business, and agricultural businesses with annual sales less than $750,000. To determine if potential economic impacts to these small entities are significant, we considered the types of activities that might trigger regulatory impacts under the rule, as well as the types of project modifications that may result. In general, the term ''significant economic impact'' is meant to apply to a typical small business firm's business operations.

A significant economic impact threshold is generally a 3 percent impact as measured by appropriate quantitative metrics, such as annualized cost of compliance as a percentage of sales, government revenue, or annual operating expenditures. In general, if more than 20 percent of the affected small entities experience a significant economic impact, then there is considered to be a significant impact on a substantial number of small entities, and a regulatory flexibility analysis must be prepared.

For there to be a significant impact on a substantial number of small entities associated with designating critical habitat, then the incremental direct compliance costs must exceed the 3 percent threshold for more than 20 percent of the affected small entities. Since the Service, BLM, and Coral Pink Sand Dunes State Park are the only entities with expected direct compliance costs and are not considered small entities, this rule will not result in a significant impact on a substantial number of small entities.

However, small entities, such as Kane County, ORV tour and rental businesses, and other local tourism-related businesses, may be indirectly affected as a result of the proposed listing and critical habitat designation. Because motorized visitors to the dunes may be further restricted access in the dune area than under the current boundaries, ORV use and rentals may be displaced or reduced, impacting the ORV rental entities and any businesses the visitors might frequent as part of their overall trip.

Executive Order 13211—Energy Supply, Distribution, and Use

E.O. 13211, Actions Concerning Regulations That Significantly Affect Energy Supply, Distribution, or Use, requires agencies to prepare Statements of Energy Effects when undertaking certain actions. The Office of Management and Budget's guidance for implementing this Executive order outlines nine outcomes that may constitute ''a significant adverse effect'' when compared to no regulatory action. Critical habitat designation for Coral Pink Sand Dunes tiger beetle is not anticipated to affect energy supply, distribution, and use. Therefore, designation of critical habitat is not expected to lead to any adverse outcomes (such as a reduction in oil and natural gas production or distribution), and a Statement of Energy Effects is not required.

Unfunded Mandates Reform Act (2 U.S.C. 1501 et seq.)

In accordance with the Unfunded Mandates Reform Act (2 U.S.C. 1501 *et seq.*), we make the following findings:

(a) This rule will not produce a Federal mandate. In general, a Federal mandate is a provision in legislation, statute, or regulation that would impose an enforceable duty upon State, local, or Tribal governments, or the private sector, and includes both ''Federal intergovernmental mandates'' and ''Federal private sector mandates.'' These terms are defined in 2 U.S.C. 658(5)–(7). ''Federal intergovernmental mandate'' includes a regulation that ''would impose an enforceable duty upon State, local, or Tribal governments,'' with two exceptions. First, it excludes ''a condition of federal assistance.'' Second, it excludes ''a duty arising from participation in a voluntary Federal program,'' unless the regulation ''relates to a then-existing Federal program under which $500,000,000 or more is provided annually to State, local, and Tribal governments under entitlement authority,'' if the provision would ''increase the stringency of conditions of assistance'' or ''place caps upon, or otherwise decrease, the Federal Government's responsibility to provide funding'' and the State, local, or Tribal governments ''lack authority'' to adjust accordingly. At the time of enactment, these entitlement programs were: Medicaid; Aid to Families with Dependent Children work programs; Child Nutrition; Food Stamps; Social Services Block Grants; Vocational Rehabilitation State Grants; Foster Care, Adoption Assistance, and Independent Living; Family Support Welfare Services; and Child Support Enforcement. ''Federal private sector mandate'' includes a regulation that ''would impose an enforceable duty upon the private sector, except (i) a condition of Federal assistance; or (ii) a duty arising from participation in a voluntary Federal program.''

The designation of critical habitat does not impose a legally binding duty on non-Federal government entities or private parties. Under the Act, the only regulatory effect is that Federal agencies must ensure that their actions do not destroy or adversely modify critical habitat under section 7. While non-Federal entities that receive Federal funding, assistance, or permits, or that otherwise require approval or authorization from a Federal agency for an action, may be indirectly impacted by the designation of critical habitat, the legally binding duty to avoid destruction or adverse modification of critical habitat rests squarely on the Federal agency. Furthermore, to the extent that non-Federal entities are indirectly impacted because they receive Federal assistance or participate in a voluntary Federal aid program, the Unfunded Mandates Reform Act would not apply, nor would critical habitat

shift the costs of the large entitlement programs listed above on to State governments.

(b) As discussed in the DEA of the proposed designation of critical habitat for Coral Pink Sand Dunes tiger beetle, we do not believe that the rule would significantly or uniquely affect small governments because it would not produce a Federal mandate of $100 million or greater in any year; that is, it is not a ''significant regulatory action'' under the Unfunded Mandates Reform Act. The DEA concludes that incremental impacts may occur due to project modifications and administrative costs of consultation that may need to be made for grazing, maintenance, and recreational activities; however, these are not expected to affect small governments to the extent described above. Consequently, we do not believe that the proposed critical habitat designation would significantly or uniquely affect small government entities. As such, a Small Government Agency Plan is not required.

References Cited

A complete list of all references we cited in the proposed rule and in this document is available on the Internet at *http://www.regulations.gov* or by contacting the Utah Ecological Services Office (see **FOR FURTHER INFORMATION CONTACT**).

Authors

The primary authors of this document are the staff members of the Utah Ecological Services Office.

Dated: April 26, 2013.

Rachel Jacobson,

Principal Deputy Assistant Secretary for Fish and Wildlife and Parks.

[FR Doc. 2013–10568 Filed 5–3–13; 8:45 am]

BILLING CODE 4310–55–P

Notices

Federal Register

Vol. 78, No. 87

Monday, May 6, 2013

This section of the FEDERAL REGISTER contains documents other than rules or proposed rules that are applicable to the public. Notices of hearings and investigations, committee meetings, agency decisions and rulings, delegations of authority, filing of petitions and applications and agency statements of organization and functions are examples of documents appearing in this section.

DEPARTMENT OF AGRICULTURE

Animal and Plant Health Inspection Service

[Docket No. APHIS–2012–0076]

Plants for Planting Whose Importation is Not Authorized Pending Pest Risk Analysis; Notice of Availability of Data Sheets for Taxa of Plants for Planting That Are Quarantine Pests or Hosts of Quarantine Pests

AGENCY: Animal and Plant Health Inspection Service, USDA.

ACTION: Notice of availability.

SUMMARY: We are advising the public that we have determined that 22 taxa of plants for planting are quarantine pests and 37 taxa of plants for planting are hosts of 9 quarantine pests and therefore should be added to our lists of taxa of plants for planting whose importation is not authorized pending pest risk analysis. We have prepared data sheets that detail the scientific evidence we evaluated in making the determination that the taxa are quarantine pests or hosts of quarantine pests. We are making these data sheets available to the public for review and comment.

DATES: We will consider all comments that we receive on or before July 5, 2013.

ADDRESSES: You may submit comments by either of the following methods:

- *Federal eRulemaking Portal:* Go to *http://www.regulations.gov/#!documentDetail;D=APHIS-2012-0076-0001.*
- *Postal Mail/Commercial Delivery:* Send your comment to Docket No. APHIS–2012–0076, Regulatory Analysis and Development, PPD, APHIS, Station 3A–03.8, 4700 River Road Unit 118, Riverdale, MD 20737–1238.

The data sheets and any comments we receive may be viewed at *http://www.regulations.gov/#!docketDetail;D=APHIS-2012-0076* or in our reading room, which is located in room 1141 of the USDA South Building, 14th Street and Independence Avenue SW., Washington, DC. Normal reading room hours are 8 a.m. to 4:30 p.m., Monday through Friday, except holidays. To be sure someone is there to help you, please call (202) 799–7039 before coming.

FOR FURTHER INFORMATION CONTACT: Dr. Arnold Tschanz, Senior Regulatory Policy Specialist, Plants for Planting Policy, RPM, PPQ, APHIS, 4700 River Road Unit 133, Riverdale, MD 20737–1236; (301) 851–2179.

SUPPLEMENTARY INFORMATION:

Background

Under the regulations in ''Subpart—Plants for Planting'' (7 CFR 319.37 through 319.37–14, referred to below as the regulations), the Animal and Plant Health Inspection Service (APHIS) of the U.S. Department of Agriculture prohibits or restricts the importation of plants for planting (including living plants, plant parts, seeds, and plant cuttings) to prevent the introduction of quarantine pests into the United States. *Quarantine pest* is defined in § 319.37–1 as a plant pest or noxious weed that is of potential economic importance to the United States and not yet present in the United States, or present but not widely distributed and being officially controlled.

In a final rule published in the **Federal Register** on May 27, 2011 (76 FR 31172–31210, Docket No. APHIS–2006–0011), and effective on June 27, 2011, we established in § 319.37–2a a new category of plants for planting whose importation is not authorized pending pest risk analysis (NAPPRA) in order to prevent the introduction of quarantine pests into the United States. The final rule established two lists of taxa whose importation is NAPPRA: A list of taxa of plants for planting that are quarantine pests, and a list of taxa of plants for planting that are hosts of quarantine pests. For taxa of plants for planting that have been determined to be quarantine pests, the list will include the names of the taxa. For taxa of plants for planting that are hosts of quarantine pests, the list will include the names of the taxa, the foreign places from which the taxa's importation is not authorized, and the quarantine pests of concern. The final rule did not add any taxa to the NAPPRA lists.

Paragraph (b) of § 319.37–2a describes the process for adding taxa to the NAPPRA lists. In accordance with that process, this notice announces our determination that 22 taxa of plants for planting are quarantine pests and 37 taxa of plants for planting are hosts of 9 quarantine pests.

This notice also makes available data sheets that detail the scientific evidence we evaluated in making the determination that the taxa are quarantine pests or hosts of a quarantine pest. The data sheets include references to the scientific evidence we used in making these determinations.

A complete list of the taxa of plants for planting that we have determined to be quarantine pests or hosts of quarantine pests, along with the data sheets supporting those determinations, may be viewed on the Regulations.gov Web site or in our reading room (see **ADDRESSES** above for a link to Regulations.gov and information on the location and hours of the reading room). You may request paper copies of the list and data sheets by calling or writing to the person listed under **FOR FURTHER INFORMATION CONTACT**.

For taxa of plants for planting that are hosts of quarantine pests, the data sheets specify the countries from which the taxa's importation would not be authorized pending pest risk analysis. In many cases, the importation of the taxa would not be allowed from any country. In some cases, the taxa would be allowed to be imported from Canada. We would allow such importation when Canada is free of the quarantine pest for which the taxa are hosts and when Canada's import regulations and our restrictions specific to Canada ensure that the pest would not be introduced into the United States through the importation of the taxa from Canada.

In a few cases, the taxa would be allowed to be imported from countries that are currently exporting the taxa to the United States, subject to restrictions in a Federal Order. We would like to clarify in this notice that we would exempt imports of taxa of plants for planting that are hosts of quarantine pests from the NAPPRA requirements when there is significant trade between the exporting country and the United States. We would continue to allow such importation based on our experience with importing those taxa of plants for planting and our findings,

through inspection, that they are generally pest free, and based on our determination that the restrictions in the Federal Order are sufficient to mitigate the risk associated with the quarantine pest in question. Generally, we would consider the importation from a country of 10 or more plants in each of the last 3 fiscal years to constitute significant trade in that taxon. However, we will also consider other data showing that there is significant trade in a taxon, even if it does not meet this standard.

After reviewing any comments we receive, we will announce our decision regarding the addition of the taxa described in the data sheets to the NAPPRA lists in a subsequent notice. If the Administrator's determination that the taxa are quarantine pests or hosts of quarantine pests remains unchanged following our consideration of the comments, then we will add the taxa described in the data sheets to the appropriate NAPPRA list.

Authority: 7 U.S.C. 450 and 7701–7772 and 7781–7786; 21 U.S.C. 136 and 136a; 7 CFR 2.22, 2.80, and 371.3.

Done in Washington, DC, this 30th day of April 2013.

Kevin Shea,

Acting Administrator, Animal and Plant Health Inspection Service.

[FR Doc. 2013–10656 Filed 5–3–13; 8:45 am]

BILLING CODE 3410–34–P

DEPARTMENT OF AGRICULTURE

Forest Service

Klamath National Forest, California, Jess Project

AGENCY: Forest Service, USDA.

ACTION: Notice of intent to prepare an environmental impact statement.

SUMMARY: The Klamath National Forest will prepare an environmental impact statement (EIS) to document and publicly disclose the environmental effects of fuels treatments on ridge tops and along roadways, thinning in natural stands and plantations, and meadow treatments to improve ecosystem function and resiliency while contributing to rural economic health. The project area is south of Sawyers Bar, California. Treatments are proposed on approximately 1,950 acres.

DATES: Comments concerning the scope of the analysis must be received by June 20, 2013. The draft environmental impact statement is expected November 2013 and the final environmental impact statement is expected January 2014.

ADDRESSES: Send written comments to Klamath National Forest Headquarters, ATTN: Angie Bell, Project Leader, 1711 S. Main Street, Yreka, CA 96097. Electronic comments can be made at the project's Web page: *http://www.fs.fed.us/nepa/nepa_project_exp.php?project=38943*, or via facsimile to (530) 841–4571.

FOR FURTHER INFORMATION CONTACT: Angie Bell, 530–842–6131, or Patty Grantham, Forest Supervisor, 530–842–6131.

Individuals who use telecommunication devices for the deaf (TDD) may call the Federal Information Relay Service (FIRS) at 1–800–877–8339 between 8 a.m. and 8 p.m., Eastern Time, Monday through Friday.

SUPPLEMENTARY INFORMATION:

Purpose and Need for Action

The Jess project was developed to improve ecosystem function and resiliency while contributing to rural economic health. A Forest Service interdisciplinary team (IDT), composed of specialists from a wide array of disciplines in collaboration with interested parties, developed a purpose and need. The collaboration efforts included several public meetings and a field trip to discuss the need for change and potential actions in the project area. The IDT identified the following purpose and need for this project by comparing the existing conditions in the project area with the desired conditions described in the Forest Plan, Late-Successional Reserve Assessments, the North Fork Salmon Watershed Assessment and the Sawyers Bar Wildfire Community Protection Plan:

- Manage fuel loadings to reduce the risk of wildfires affecting nearby communities.
- Improve compositional, structural, and functional attributes of biologically diverse forest ecosystems by restoring ecological processes that build resiliency to high-intensity wildfire and insect and disease.
- Provide a broad range of ecosystem services, including wood products, rural economic health, biodiversity, and the beneficial uses of water.

Proposed Action

The IDT, in conjunction with the informal collaborative group composed of local, interested parties, inventoried the project area to identify resource concerns and develop management activities (proposed actions) to achieve the purpose and need for the Jess Project. The following proposed actions have been identified to move the project area from the existing condition to the desired condition. Project design features (PDFs) and best management practices (BMPs) are incorporated into this proposed action. The Forest Service proposes the following treatments on about 1,950 acres within the 8,735 acre project boundary:

- Commercially harvest about 810 acres, including natural stands and plantations, with about 120 acres proposed for skyline and 690 acres of ground-based yarding;
- Treating fuels on strategic ridge tops on about 165 acres, including 95 acres of thinning, handpiling, and burning and 70 acres of mastication;
- Reducing roadside fuels on about 615 acres over 15 miles of National Forest Transportation System (NFTS) roads;
- Prescribed underburning about 250 acres;
- Planting rust-resistant sugar pine on scattered acres throughout the project area;
- Enhancing meadows around Mud Lake and other locations in the project area; and
- Masticating and handpiling/burning brush on about 150 acres for stand health and big game habitat enhancement.

Acres by treatment type do not account for the overlap in treatment types. Thinning treatments are likely to take place over the first five years after decision, followed by prescribed burning and pile burning in subsequent years. A more detailed description of this proposal, including access, is below.

Commercial harvest of trees larger than 9 inches dbh will occur on over 800 acres. Commercial treatments will vary with species preference and would be driven by topographic location, amount of disease present, and desired regeneration species. Trees with greater than 20–50% of their crown infected with mistletoe, depending on unit, will be candidates for removal. Dominant and co-dominant trees with full crowns, despite mistletoe infection will be maintained in treatment units. Several units have groups of older trees that will be retained as islands to provide spatial variation. Some small openings will be increased to resemble more historic gap sizes of 1–2½ acres. Hardwoods will be favored and will be thinned around in areas. Enhancement of hardwoods and reduction of conifer competition is prescribed in several units. Patches of saplings and pole size trees will be avoided during treatment. Overall, the best crowns will be maintained with crown spacing varying from five to twenty feet wide. Sugar pines proven to be rust-resistant from a local seed zone

and appropriate elevation bands will be planted in newly created openings within areas of historical dominance.

Small diameter (less than 9 inches diameter at breast height (dbh)) conifers in ridge top fuel treatments will be thinned, handpiled, and burned. Mastication will occur along strategic ridges between the handpiled areas to complete the ridge treatments.

Roadside treatments will manually cut, handpile, and burn brush and small diameter trees (less than 6 inches dbh) within buffers about 100 feet wide on either side of the road. Actual treatment may vary in size and width depending on fuel conditions. Trees less than 10 inches dbh will be thinned to an average of 20-foot bole spacing. Existing brush densities will be reduced by 40–60% where they exist. All hazard trees will be identified and removed in accordance with danger tree guidelines. Roadside fuels treatments would complement treatments proposed by the local fire safe council.

Pre-commercial treatments will thin small diameter conifers (less than 9 inches dbh) to approximately 28–30 foot bole spacing or a specified distance from trees of a certain diameter. For example, if a tree is four inches dbh, then spacing will be dbh times 12 plus 10 feet, equaling 14-foot bole spacing. There will be species specific preferences for thinning in some units.

Meadow treatments will consist of manually removing small diameter conifers (less than 9 inches dbh). The removed trees will be handpiled and burned. Noxious weed will be removal using manual techniques. Willows may be planted in and around the meadows where needed to increase shade and bank stability.

Three miles of existing roadbeds will be used as temporary roads for short-term access and then closed following project completion to reduce log skidding distances and associated impacts to soils and other resources. No new temporary roads are proposed. Existing landings will be used to the extent possible. The estimated number of new landings needed for the project is 30, with a maximum size less than one-acre each.

Responsible Official

Patricia Grantham, Klamath National Forest Supervisor, 1711 South Main Street, Yreka, California 96097, will prepare and sign the Record of Decision at the conclusion of the National Environmental Policy Act (NEPA) review.

Nature of Decision To Be Made

The Forest Service is the lead agency for the project. Based on the result of the NEPA analysis, the Forest Supervisor's Record of Decision regarding the Jess Project will recommend implementation of one of the following: (1) The proposed action and mitigation necessary to minimize or avoid adverse impacts; (2) An alternative to the proposed action and mitigation necessary to minimize or avoid adverse impacts; or (3) The no-action alternative. The Record of Decision will also document the consistency of the proposed action or one of the alternatives with the Klamath National Forest Land and Resource Management Plan.

Scoping Process

This notice of intent initiates the scoping process, which guides the development of the environmental impact statement. To assist the Forest Service in identifying and considering issues and concerns on the proposed action, comments should be as specific as possible.

It is important that reviewers provide their comments at such times and in such manner that they are useful to the agency's preparation of the environmental impact statement. Therefore, comments should be provided prior to the close of the comment period and should clearly articulate the reviewer's concerns and contentions.

It is important that reviewers provide their comments at such times and in such manner that they are useful to the agency's preparation of the environmental impact statement. Therefore, comments should be provided prior to the close of the comment period and should clearly articulate the reviewer's concerns and contentions.

Comments received in response to this solicitation, including names and addresses of those who comment, will be part of the public record for this proposed action. Comments submitted anonymously will be accepted and considered, however.

Dated: April 25, 2013.

Patricia A. Grantham,

Klamath National Forest Supervisor.

[FR Doc. 2013–10489 Filed 5–3–13; 8:45 am]

BILLING CODE 3410–11–P

DEPARTMENT OF COMMERCE

Submission for OMB Review; Comment Request

The Department of Commerce will submit to the Office of Management and Budget (OMB) for clearance the following proposal for collection of information under the provisions of the Paperwork Reduction Act (44 U.S.C. chapter 35).

Agency: U.S. Census Bureau.

Title: U.S. Census—Age Search.

OMB Control Number: 0607–0117.

Form Number(s): BC–600, BC–600SP, BC–649(L), BC–658(L).

Type of Request: Revision of a currently approved collection.

Burden Hours: 628.

Number of Respondents: 2,799.

Average Hours per Response: 11 minutes.

Needs and Uses: The U.S. Census Bureau maintains the 1910–2010 Federal censuses for searching purposes. The purpose of the searching is to provide, upon request, transcripts of personal data from historical population census records. Information relating to age, place of birth, and citizenship is provided upon payment of the established fee to individuals for their use in qualifying for social security, old age benefits, retirement, court litigation, passports, insurance settlements, etc. The age and citizenship searching service is a self-supporting operation. Expenses incurred in providing census transcripts are covered by the fees paid by individuals requesting a search of the census records. The census records are confidential by an Act of Congress. The Census Bureau is prohibited by federal laws from disclosing any information contained in the records except upon written request from the person to whom the information pertains or to a legal representative.

Affected Public: Individuals or households.

Frequency: On occasion.

Respondent's Obligation: Required to obtain benefits.

Legal Authority: Title 13 U.S.C., Section 8a.

OMB Desk Officer: Brian Harris-Kojetin, (202) 395–7314.

Copies of the above information collection proposal can be obtained by calling or writing Jennifer Jessup, Departmental Paperwork Clearance Officer, (202) 482–0336, Department of Commerce, Room 6616, 14th and Constitution Avenue NW., Washington, DC 20230 (or via the Internet at *jjessup@doc.gov*).

Written comments and recommendations for the proposed

information collection should be sent within 30 days of publication of this notice to Brian Harris-Kojetin, OMB Desk Officer either by fax (202–395–7245) or email (*bharrisk@omb.eop.gov*).

Dated: May 1, 2013.

Glenna Mickelson,

Management Analyst, Office of the Chief Information Officer.

[FR Doc. 2013–10650 Filed 5–3–13; 8:45 am]

BILLING CODE 3510–07–P

DEPARTMENT OF COMMERCE

International Trade Administration

[A–533–813]

Certain Preserved Mushrooms From India: Rescission of Antidumping Duty Administrative Review; 2012—2013

AGENCY: Import Administration, International Trade Administration, Department of Commerce.

FOR FURTHER INFORMATION CONTACT: Katherine Johnson or Terre Keaton Stefanova, Import Administration, International Trade Administration, U.S. Department of Commerce, 14th Street and Constitution Avenue NW., Washington, DC 20230; telephone: (202) 482–4929 or (202) 482–1280, respectively.

SUPPLEMENTARY INFORMATION:

Background

On February 1, 2013, the Department of Commerce (the Department) published in the **Federal Register** a notice of ''Opportunity to Request Administrative Review'' of the antidumping duty order on certain preserved mushrooms from India for the period of review (POR) of February 1, 2012, through January 31, 2013.[1]

On February 28, 2013, in accordance with section 751(a) of the Tariff Act of 1930, as amended (the Act), and 19 CFR 351.213(b), the Department received a timely request from Monterey Mushrooms, Inc. (the petitioner), a domestic interested party, to conduct an administrative review of the sales of Agro Dutch Industries Limited (Agro Dutch), Himalya International Ltd. (Himalya), Hindustan Lever Ltd. (formerly Ponds India, Ltd.) (Hindustan), Transchem Ltd. (Transchem), and Weikfield Foods Pvt. Ltd (Weikfield). The petitioner was the only party to request this administrative review.

On March 29, 2012, the Department published in the **Federal Register** a notice of initiation of an administrative review of the antidumping duty order on certain preserved mushrooms from India with respect to the above-named companies.[2]

On April 19, 2013, the petitioner timely withdrew its request for a review of all five companies.

Rescission of Review

Pursuant to 19 CFR 351.213(d)(1), the Department will rescind an administrative review, in whole or in part, if the parties that requested a review withdraw the request within 90 days of the date of publication of notice of initiation of the requested review. The petitioner withdrew its request for review before the 90-day deadline, and no other party requested an administrative review of the antidumping duty order on certain preserved mushrooms from India for the POR. Therefore, in response to the petitioner's withdrawal of its request for review of Agro Dutch, Himalya, Hindustan, Transchem and Weikfield and pursuant to 19 CFR 351.213(d)(1), we are fully rescinding this review.

Assessment

The Department will instruct U.S. Customs and Border Protection (CBP) to assess antidumping duties on all appropriate entries. Antidumping duties shall be assessed at rates equal to the cash deposit of estimated antidumping duties required at the time of entry, or withdrawal from warehouse, for consumption, in accordance with 19 CFR 351.212(c)(1)(i). The Department intends to issue appropriate assessment instructions directly to CBP 15 days after the date of publication of this notice in the **Federal Register**.

Notification to Importers

This notice serves as the only reminder to importers of their responsibility, under 19 CFR 351.402(f)(2), to file a certificate regarding the reimbursement of antidumping duties prior to liquidation of the relevant entries during this review period. Failure to comply with this requirement could result in the Secretary's presumption that reimbursement of antidumping duties occurred and the subsequent assessment of double antidumping duties.

Notification Regarding Administrative Protective Order

This notice serves as the only reminder to parties subject to administrative protective order (APO) of their responsibility concerning the disposition of proprietary information disclosed under APO in accordance with 19 CFR 351.305(a)(3). Timely written notification of return/destruction of APO materials or conversion to judicial protective order is hereby requested. Failure to comply with the regulations and the terms of an APO is a sanctionable violation.

This notice is published in accordance with section 751 of the Act and 19 CFR 351.213(d)(4).

Dated: April 29, 2013.

Christian Marsh,

Deputy Assistant Secretary for Antidumping and Countervailing Duty Operations.

[FR Doc. 2013–10691 Filed 5–3–13; 8:45 am]

BILLING CODE 3510–DS–P

[1] *See Antidumping or Countervailing Duty Order, Finding, or Suspended Investigation; Opportunity to Request Administrative Review,* 78 FR 7397 (February 1, 2013).

[2] *See Initiation of Antidumping Duty Administrative Reviews, Request for Revocation in Part, and Deferral of Administrative Review,* 77 FR 19179 (March 29, 2013).

DEPARTMENT OF COMMERCE

National Oceanic and Atmospheric Administration

[Docket No.: 130501428–3428–01]

Deepwater Horizon Oil Spill; Proposal of Future Early Restoration Projects and Environmental Reviews

AGENCY: National Oceanic and Atmospheric Administration, Commerce.

ACTION: Notice.

SUMMARY: The federal and state natural resource trustees for the *Deepwater Horizon* oil spill (Trustees) intend to propose the additional early restoration projects described below to continue the process of using early restoration funding to restore natural resources, ecological services, and human use services injured or lost as a result of the *Deepwater Horizon* oil spill disaster. All early restoration projects will be selected and implemented in accordance with the Oil Pollution Act of 1990 (OPA), the Framework Agreement for Early Restoration Addressing Injuries Resulting from the *Deepwater Horizon* Oil Spill (Framework Agreement), and all applicable legal requirements, including the National Environmental Policy Act (NEPA).

SUPPLEMENTARY INFORMATION:

Introduction

On or about April 20, 2010, the mobile offshore drilling unit *Deepwater Horizon,* which was being used to drill a well for BP Exploration and

Production, Inc. (BP), in the Macondo prospect (Mississippi Canyon 252–MC252), exploded, caught fire and subsequently sank in the Gulf of Mexico, resulting in an unprecedented volume of oil and other discharges from the rig and from the wellhead on the seabed. The *Deepwater Horizon* oil spill is the largest oil spill in U.S. history due to the millions of barrels of oil discharged over a period of 87 days. In addition, well over one million gallons of dispersants were applied to the waters of the spill area in an attempt to disperse the spilled oil. An undetermined amount of natural gas was also released to the environment as a result of the spill. Affected natural resources include ecologically, recreationally, and commercially important species and their nearshore and offshore habitats in the Gulf of Mexico and along the coastal areas of Alabama, Florida, Louisiana, Mississippi, and Texas.

The state and federal natural resource trustees (Trustees) are conducting the natural resource damage assessment (NRDA) for the *Deepwater Horizon* oil spill under the Oil Pollution Act 1990 (OPA; 33 U.S.C. 2701 et seq.). Pursuant to OPA, federal and state agencies act as trustees on behalf of the public to assess natural resource injuries and losses and to determine the actions required to compensate the public for those injuries and losses. OPA further instructs the designated trustees to develop and implement a plan for the restoration, rehabilitation, replacement, or acquisition of the equivalent of the injured natural resources under their trusteeship, including the loss of use and services from those resources from the time of injury until the time they are restored. Pursuant to the process articulated in the Framework Agreement, the Trustees have previously selected, and BP has agreed to fund, a total of ten early restoration projects, expected to cost a total of approximately $71 million, through the Phase I and Phase II Early Restoration Plans.

The Trustees are:

- U.S. Department of the Interior (DOI), as represented by the National Park Service, U.S. Fish and Wildlife Service, and Bureau of Land Management;
- National Oceanic and Atmospheric Administration (NOAA), on behalf of the U.S. Department of Commerce;
- U.S. Department of Agriculture (USDA);
- U.S. Department of Defense (DOD); [1]
- U.S. Environmental Protection Agency (USEPA);
- State of Louisiana Coastal Protection and Restoration Authority, Oil Spill Coordinator's Office, Department of Environmental Quality, Department of Wildlife and Fisheries, and Department of Natural Resources;
- State of Mississippi Department of Environmental Quality;
- State of Alabama Department of Conservation and Natural Resources and Geological Survey of Alabama;
- State of Florida Department of Environmental Protection and Fish and Wildlife Conservation Commission; and
- For the State of Texas: Texas Parks and Wildlife Department, Texas General Land Office, and Texas Commission on Environmental Quality.

Background on Early Restoration

On April 20, 2011, BP agreed to provide up to $1 billion to fund early restoration projects in the Gulf of Mexico to begin addressing injuries to natural resources caused by the *Deepwater Horizon* oil spill. The Framework Agreement represents a preliminary step toward the restoration of injured natural resources and the lost use of, and services from, those resources. The Framework Agreement is intended to expedite the start of restoration in the Gulf in advance of the completion of the injury assessment process. The Framework Agreement provides a mechanism through which the Trustees and BP can work together ''to commence implementation of early restoration projects that will provide meaningful benefits to accelerate restoration in the Gulf as quickly as practicable'' prior to the resolution of the Trustees' natural resource damages claim.

The Trustees actively solicited public input on restoration project ideas through a variety of mechanisms, including public meetings, electronic communication, and creation of a Trustee-wide public Web site and database to share information and receive public project submissions. The Trustees' key objective in pursuing early restoration is to secure tangible recovery of natural resources and natural resource services for the public's benefit while the longer-term process of fully assessing injury and damages is underway. As the first step in this accelerated process, the Trustees released, after public review of a draft, a Phase I Early Restoration Plan/Environmental Assessment (Phase I ERP) in April 2012. In December 2012, after public review of a draft, the Trustees released a Phase II Early Restoration Plan/Environmental Review (Phase II ERP). Collectively, the Phase I and Phase II ERPs include a total of ten projects that were selected by the Trustees and, after negotiations in accordance with the terms of the Framework Agreement, agreed to by BP. Those restoration actions include nine separate projects that are ready for implementation, and one project that the Trustees have selected for completion for project design and final NEPA review. The Trustees have begun implementing many of the projects selected in the Phase I and Phase II ERPs.

In continuation of the early restoration process, following lengthy negotiations with BP to secure funding under the Framework Agreement, the Trustees intend to propose the additional early restoration projects described herein to partially restore injured natural resources and lost natural resource services caused by the *Deepwater Horizon* oil spill. If selected, these projects collectively would represent close to $600 million in funding (in addition to the $71 million previously committed) to support early restoration. The Trustees anticipate seeking formal public comment on these projects in accordance with the OPA regulations, 15 C.F.R. 990 *et seq.* The Trustees intend to evaluate proposed restoration alternatives in accordance with all applicable law and regulations, including, without limitation, OPA and its implementing regulations, the National Environmental Policy Act, 42 U.S.C. 4321 *et seq.,* the Endangered Species Act, 16 U.S.C. §§ 5131 et seq., the National Historic Preservation Act, 16 U.S.C. 470 *et seq.,* the Coastal Zone Management Act, 16 U.S.C. 1451 *et seq.,* the Magnuson-Stevens Fishery Conservation and Management Act, 16 U.S.C. 1801 *et seq.,* and any applicable permitting requirements. The Trustees will also evaluate the proposed alternatives pursuant to the criteria included in the Framework Agreement.

In addition to the early restoration projects identified below, the Trustees will continue to identify potential additional early restoration projects. Those projects will be subject to early restoration planning. Ultimately, all early restoration plans will be incorporated into a single, comprehensive OPA Restoration Plan/Environmental Impact Statement, which will address natural resource damages

[1] Although a trustee under OPA by virtue of the proximity of its facilities to the *Deepwater Horizon* oil spill, DOD is not a member of the Trustee Council and does not participate in Trustee decision-making.

resulting from the *Deepwater Horizon* oil spill.

The additional early restoration projects that the Trustees presently intend to propose are described below.

Alabama

• *Gulf State Park Enhancements* (Baldwin County, Alabama). This project would restore lost recreational use services and lost dune habitat services through the following five primary elements: 1) Construction of a coastal ecosystems interpretive center, 2) construction of an environmental research and education facility to benefit Alabama students, 3) trail construction and enhancement in the park, 4) dune restoration along the park's extensive undeveloped beachfront and 5) contribute to the construction of a lodge and meeting facility to facilitate the enhanced visitor experience. The estimated cost of this project is approximately $85.5 million.

• *Oyster Reef Restoration in Mobile County* (Mobile County, Alabama). This project would restore approximately 319 acres of oyster reef in the estuarine waters of the State of Alabama. The project would utilize oyster shell cultch to restore non-producing oyster reefs in Mobile County, Alabama, an area impacted by the DWH spill. These restored reefs would be in proximity to other reefs that are currently managed by the state and will be within the historic footprint of oyster reefs in the area. The estimated cost of this project is approximately $3.2 million.

• *Swift Tract Living Shoreline* (Baldwin County, Alabama). This project would construct an oyster breakwater/living shoreline to stabilize and protect 1.6 miles of shoreline from erosion by dampening wave energy while also providing substrate for oyster colonization. The purpose is to reduce coastal marsh loss from shoreline erosion and reestablish substrate for shellfish colonization. The estimated cost of this project is approximately $5 million.

Florida

• *Perdido Key Dune Restoration* (Escambia County, Florida). The project would consist of planting 20 acres of appropriate dune vegetation (e.g., sea oats, panic grasses, cord grasses, sea purslane, and beach elder) approximately 40′ seaward of the existing primary dune over a length of approximately 4 miles of frontage. The purpose would be to provide a buffer which would lead to enhanced dune habitats. The estimated cost of this project is approximately $600,000.

• *Pensacola Bay Living Shoreline* (Escambia County, Florida). By constructing breakwaters, this project would stabilize shorelines at Sanders Beach and Project Greenshores Site II areas within Pensacola Bay. The purpose would be to protect the embayment and create salt marsh habitat by reducing wave energy and providing substrate for oyster larvae, which would help restore benthic secondary productivity. Also included would be the creation of salt marsh habitat, which would help to restore important habitat for many species of fish and birds. The estimated cost of this project is approximately $11 million.

• *Florida Bay Seagrass Recovery Project* (Gulf, Franklin and Bay counties Florida). This project would provide for the restoration of seagrass beds by stabilizing propeller scars over approximately two acres in three Aquatic Preserves within Alligator Harbor, St. Joseph Bay and St. Andrew Bay. Also included would be boater outreach educational information and Shallow Seagrass Area signage. The estimated cost of this project is approximately $2.7 million.

• *Florida Cat Point Living Shoreline Project* (Franklin County, Florida): By constructing a breakwater, this project would stabilize shoreline in St. George Sound. The purpose would be to protect the embayment and create salt marsh habitat by reducing wave energy and providing substrate for oyster larvae, which would help restore benthic secondary productivity. Also included would be the creation of salt marsh habitat, which would help to restore important habitat for many species of fish and birds. The estimated cost of this project is approximately $800,000.

• *Florida Oyster Reef Restoration* (Escambia, Santa Rosa, Bay and Franklin Counties, Florida). This project would involve placing cultch material over approximately 210 acres for the settling of oyster larvae and oyster colonization in the Pensacola Bay system in Escambia and Santa Rosa Counties, the St. Andrew Bay system in Bay County, and in the Apalachicola Bay system in Franklin County. The estimated cost of this project is approximately $5.4 million.

• *Florida Gulf Coast Marine Fisheries Hatchery/Enhancement Center* (Escambia County, Florida). This project would provide for the construction and operation of a saltwater sportfish hatchery. Lost recreational fishing opportunities would be restored by providing hatchery production and eventual release of sportfish species such as red snapper, red drum, and spotted seatrout. The estimated cost of this project is approximately $20 million.

• *Scallop Enhancement for Increased Recreational Fishing Opportunity in the Florida Panhandle* (Escambia, Santa Rosa, Okaloosa, Walton, Bay, Gulf, and Franklin counties, Florida). This project would enhance naturally occurring bay scallop (Argopecten irradians) populations in Florida's panhandle bays to support expanded recreational fishing opportunities. The estimated cost of this project is approximately $3 million.

• *Florida Artificial Reef Creation and Restoration* (Escambia, Santa Rosa, Okaloosa, Walton, and Bay counties, Florida). This project would provide for enhancement at different depths, both nearshore and offshore, of various permitted artificial reef areas off the western panhandle counties. The purpose is to restore lost recreational use through improved fishing and diving opportunities. The estimated cost of this project is approximately $11.4 million.

• *Beach Enhancement Project at Gulf Island National Seashore* (Escambia County, Florida). This project involves removing tens of thousands of cubic yards of asphalt fragments and road base material that has been scattered over hundreds of acres and approximately 11 miles of the Fort Pickens and the Santa Rosa areas of Gulf Island National Seashore. The purpose is to help restore lost recreational opportunities to the Gulf. The estimated cost of this project is approximately $11 million.

• *Big Lagoon State Park Boat Ramp Improvement* (Escambia County, Florida). This project would include adding an additional lane to the boat ramp, expanding boat trailer parking, improving traffic circulation at the boat ramp and providing a new restroom facility. The purpose is to enhance visitors' access to coastal natural resources and help restore lost recreational opportunities. The estimated cost of this project is approximately $1.5 million.

• *Bob Sikes Pier Restoration* (Escambia County, Florida). This project would improve access to and add amenities of the existing Bob Sikes Fishing Pier and parking area. Historically, the Bob Sikes fishing pier has provided an opportunity for the general public to access the Gulf of Mexico for fishing and site-seeing. The estimated cost of this project is approximately $1 million.

• *Ferry Boat Access to Ft. Pickens, Gulf Island National Seashore* (Escambia County, Florida). This project would provide for the purchase of two ferry boats for use in a new ferry service. The purpose is to help restore lost

recreational opportunities by improving visitor access to the Gulf Island National Seashore. The estimated cost of this project is approximately $4 million.

• *Perdido Key Boardwalk Improvements* (Escambia County, Florida). The project would replace the six boardwalks leading to the beach, thus restoring lost recreational use services by improving visitor access. The project includes two beach access areas with three boardwalks at each location. The estimated cost of this project is approximately $600,000.

• *Shell Point Beach Nourishment* (Wakulla County, Florida). The project would provide for beach nourishment to improve public recreational opportunities by placing approximately 15,000 cubic yards of dredged sand from an approved upland borrow area on about one mile of Shell Point Beach. The estimated cost of this project is approximately $880,000.

Louisiana

• *Louisiana Outer Coast Restoration* (Plaquemines Parish and Terrebonne Parish, Louisiana). Barrier island restoration would restore beach, dune, and back-barrier marsh habitat and will take place at the following locations: Caillou Lake Headlands (also known as Whiskey Island), Cheniere Ronquille, Shell Island (East and West Lobes), and North Breton Island. The restoration work at each island involves placement of appropriately-sized sediments to create beach, dune, and back-barrier marsh areas; installation of sand fencing to trap and retain wind-blown sediments and foster dune development; and revegetation of appropriate native species. Louisiana barrier islands provide important habitat for a wide variety of fish, shellfish, birds, and other wildlife; they also were among the first terrestrial habitats to be oiled during the Spill because of their position along the outer coast. The estimated cost is approximately $320 million.

• *Louisiana Marine Fisheries Enhancement, Research and Science Center* (Calcasieu Parish and Plaquemines Parish, Louisiana). This project would involve the development of two sites in Louisiana, one in Calcasieu Parish and one in Plaquemines Parish, into facilities that will assist with research and enhancement of marine fisheries. The estimated cost of this project is approximately $22 million.

Mississippi

• *Hancock County Marsh Living Shoreline* (Hancock County, Mississippi). This project would construct an approximately six mile Living Shoreline to reduce shoreline erosion, re-establish oyster habitat, and enhance fisheries resources and marsh habitat. Approximately 46 acres of marsh would be constructed to protect and restore marsh and 46 acres of sub-tidal oyster reef would be created in Heron Bay to protect the shallow embayment and to increase oyster production in the area. The estimated cost of this project is approximately $50 million.

• *Restoration Initiatives at the INFINITY Science Center* (Hancock County, Mississippi). INFINITY is a state-of-the-art interactive science research, education, and interpretive center located in Hancock County. This project would provide for the construction of wetland walkways, viewing structures, piers and interpretive centers. Additional components would include indoor exhibits and a greenhouse/nursery for growing native wetland species. The purpose would be to replace lost recreational opportunities through enhanced visitors' access to coastal natural resources. The estimated cost of this project is approximately $10.4 million.

• *Popp's Ferry Causeway Park* (Harrison County, Mississippi). The project would provide for construction of an interpretive center with trails and boardwalks, and other recreational enhancements. This project would replace lost recreational opportunities by enhancing existing amenities for visitors to be able to fish, crab, walk and observe nature. The estimated cost of this project is approximately $4.7 million.

• *Pascagoula Beach Front Promenade* (Jackson County, Mississippi). The project would provide a two-mile, 10-foot wide lighted concrete pathway complete with benches, shower stations, fire pits, sculptures, fishing areas and a playground. The purpose would be to restore the loss of shoreline recreational opportunities by enhancing access to the Mississippi Sound and its natural resources. The estimated cost of this project is approximately $3.8 million.

Texas

• *Texas Artificial Reef* (mid/upper coast; Jefferson or Nueces County). This project would provide artificial reef structure along the Texas coast. Artificial reefs would be placed offshore if the necessary large-scale materials are available or nearshore using constructed stable and clean materials. The artificial reefs would be developed in existing permitted reef sites. Artificial reefs are used by fishermen and scuba divers as recreational areas due to the aquatic community that develops in reef habitat. The estimated cost of this project is approximately $1.8 million.

• *Development of Nearshore Artificial Reefs in the Texas Waters of the Gulf of Mexico* (Brazoria County, Texas). This project would provide for the enhancement of a nearshore reef site off Freeport, Texas. The estimated cost of this project is approximately $2 million.

• *Enhancement of the Matagorda Nearshore Artificial Reefs in the Texas Waters of the Gulf of Mexico* (Matagorda County, Texas). This project would include the construction of a new nearshore artificial reef site off of Matagorda, Texas. The estimated cost of this project is approximately $3.5 million.

• *Sea Rim State Park Amenities* (Jefferson County, Texas). The project would provide for construction of facilities that provide enhanced recreation within Sea Rim State Park, including a fish cleaning station, restroom facility, and two wildlife viewing blinds. The purpose would be to allow for enhanced fishing experiences, observation, and interpretive opportunities. The estimated cost of this project is approximately $210,000.

• *Galveston Island State Park Beach Re-development* (Galveston County, Texas). This project would provide for the construction of multi-use campsites, tent campsites, an equestrian trail head, beach access via dune walk-over boardwalks and other recreational enhancements on the Gulf side of Galveston Island State Park. The purpose would be to restore the loss of recreational opportunities by enhancing access to the Gulf. The estimated cost of this project is approximately $10.7 million.

Next Steps

In the coming months the Trustees will provide more information about the proposed projects and will at that time invite public review and comment in accordance with the OPA regulations, 15 CFR §§ 990 et seq.

Administrative Record

The documents comprising the Administrative Record can be viewed electronically at the following location: *http://www.doi.gov/deepwaterhorizon.*

Authority

The authority of this action is the Oil Pollution Act of 1990 (33 U.S.C. 2701 *et seq.*) and the implementing Natural Resource Damage Assessment regulations found at 15 CFR part 990.

Dated: May 1, 2013.

Lois J. Schiffer,

NOAA General Counsel.

[FR Doc. 2013–10693 Filed 5–3–13; 8:45 am]

BILLING CODE 3510–12–P

DEPARTMENT OF COMMERCE

National Oceanic and Atmospheric Administration

RIN 0648–XC078

Endangered Species; File No. 17183

AGENCY: National Marine Fisheries Service (NMFS), National Oceanic and Atmospheric Administration (NOAA), Commerce.

ACTION: Issuance of permit.

SUMMARY: Notice is hereby given that Raymond Carthy, Ph.D., University of Florida, Florida Cooperative Fish and Wildlife Research Unit, 117 Newins-Ziegler Hall, P.O. Box 110450, Gainesville, FL 32611, has been issued a permit to take green (*Chelonia mydas*), loggerhead (*Caretta caretta*), hawksbill (*Eretmochelys imbricata*), and Kemp's ridley (*Lepidochelys kempii*) sea turtles for purposes of scientific research.

ADDRESSES: The permit and related documents are available for review upon written request or by appointment in the following offices:

Permits and Conservation Division, Office of Protected Resources, NMFS, 1315 East-West Highway, Room 13705, Silver Spring, MD 20910; phone (301) 427–8401; fax (301) 713–0376; and

Southeast Region, NMFS, 263 13th Ave South, St. Petersburg, FL 33701; phone (727) 824–5312; fax (727) 824–5309.

FOR FURTHER INFORMATION CONTACT: Colette Cairns or Amy Hapeman, (301) 427–8401.

SUPPLEMENTARY INFORMATION: On July 2, 2012, notice was published in the **Federal Register** (77 FR 39220) that a request for a scientific research permit to take green, loggerhead, hawksbill, and Kemp's ridley sea turtles had been submitted by the above-named individual. The requested permit has been issued under the authority of the Endangered Species Act of 1973, as amended (ESA; 16 U.S.C. 1531 *et seq.*) and the regulations governing the taking, importing, and exporting of endangered and threatened species (50 CFR parts 222–226).

Dr. Carthy has been issued a five-year permit to continue long-term research on the demographics and movements of green, loggerhead, hawksbill, and Kemp's ridley sea turtles off the northwest coast of Florida. Researchers are authorized to capture sea turtles annually by strike net, tangle net, dip net or hand capture. Captured sea turtles may be measured, weighed, passive integrated transponder tagged, flipper tagged, epibiota sampled, tissue sampled, blood sampled, gastric lavaged, carapace marked, photographed, and released. A subset of sea turtles may be fitted with telemetry tags—either a satellite tag or an acoustic tag with an accelerometer.

Issuance of this permit, as required by the ESA, was based on a finding that such permit (1) Was applied for in good faith, (2) will not operate to the disadvantage of such endangered or threatened species, and (3) is consistent with the purposes and policies set forth in section 2 of the ESA.

Dated: April 30, 2013.

P. Michael Payne,

Chief, Permits and Conservation Division, Office of Protected Resources, National Marine Fisheries Service.

[FR Doc. 2013–10540 Filed 5–3–13; 8:45 am]

BILLING CODE 3510–22–P

DEPARTMENT OF COMMERCE

National Telecommunications and Information Administration

First Responder Network Authority Board Special Meeting

AGENCY: National Telecommunications and Information Administration, U.S. Department of Commerce.

ACTION: Notice of Public Meeting of the First Responder Network Authority.

SUMMARY: The Board of the First Responder Network Authority (FirstNet) will hold a Special Meeting via telephone conference (teleconference) on May 8, 2013.

DATES: The Special Meeting will be held on Wednesday, May 8, 2013, from 4:30 p.m. to 5:30 p.m. Eastern Daylight Time.

ADDRESSES: The Special Meeting will be conducted via teleconference. Members of the public may listen to the meeting by dialing toll-free 1 (888) 469–1931 and entering passcode 9056016. Due to the limited number of ports, attendance via teleconference will be on a first-come, first-served basis.

FOR FURTHER INFORMATION CONTACT: Uzoma Onyeije, Secretary, FirstNet, U.S. Department of Commerce, 1401 Constitution Avenue NW., Washington, DC 20230: telephone (202) 482–0016; email *uzoma@firstnet.gov.* Please direct media inquiries to NTIA's Office of Public Affairs, (202) 482–7002.

SUPPLEMENTARY INFORMATION:

Background: The Middle Class Tax Relief and Job Creation Act of 2012 (Act), Public Law 112–96, 126 Stat. 156 (2012), created FirstNet as an independent authority within the NTIA. The Act directs FirstNet to establish a single nationwide, interoperable public safety broadband network. The FirstNet Board is responsible for making strategic decisions regarding FirstNet's operations. As provided in section 4.08 of the FirstNet Bylaws, the Board through this Notice provides at least two days' notice of a Special Meeting of the Board to be held on May 8, 2013. The Board may, by a majority vote, close a portion of the Special Meeting as necessary to preserve the confidentiality of commercial or financial information that is privileged or confidential, to discuss personnel matters, or to discuss legal matters affecting FirstNet, including pending or potential litigation. *See* 47 U.S.C. 1424(e)(2).

Matters to Be Considered: NTIA will post an agenda for the Special Meeting on its Web site, *http://www.ntia.doc.gov/category/firstnet* prior to the meeting. The agenda topics are subject to change.

Time and Date: The Special Meeting will be held on May 8, 2013, from 4:30 p.m. to 5:30 p.m. Eastern Daylight Time. The times and dates are subject to change. Please refer to NTIA's Web site, *http://www.ntia.doc.gov/category/firstnet* for the most up-to-date information.

Other Information: The teleconference for the Special Meeting is open to the public. On the date and time of the Special Meeting, members of the public may call toll-free 1 (888) 469–1931 and enter passcode 9056016 to listen to the meeting. If you experience technical difficulty, please contact Helen Shaw by telephone (202) 482–1157; or via email *hshaw@ntia.doc.gov.* Public access will be limited to listen-only. Due to the limited number of ports, attendance via teleconference will be on a first-come, first-served basis. The Special Meeting is accessible to people with disabilities. Individuals requiring accommodations are asked to notify Mr. Onyeije, by telephone (202) 482–0016 or email *uzoma@firstnet.gov,* at least two days (2) business days before the meeting.

Records: NTIA maintains records of all Board proceedings. Board minutes will be available at *http://www.ntia.doc.gov/category/firstnet.*

Dated: May 1, 2013.

Kathy D. Smith,

Chief Counsel.

[FR Doc. 2013–10663 Filed 5–3–13; 8:45 am]

BILLING CODE 3510–60–P

COMMISSION OF FINE ARTS

Notice of Meeting

The next meeting of the U.S. Commission of Fine Arts is scheduled for 16 May 2013, at 9:00 a.m. in the Commission offices at the National Building Museum, Suite 312, Judiciary Square, 401 F Street, NW., Washington DC, 20001–2728. Items of discussion may include buildings, parks, and memorials.

Draft agendas and additional information regarding the Commission are available on our Web site: *www.cfa.gov.* Inquiries regarding the agenda and requests to submit written or oral statements should be addressed to Thomas Luebke, Secretary, U.S. Commission of Fine Arts, at the above address; by emailing CFAStaff@cfa.gov; or by calling 202–504–2200. Individuals requiring sign language interpretation for the hearing impaired should contact the Secretary at least 10 days before the meeting date.

Dated: April 29, 2013 in Washington DC.

Thomas Luebke,

AIA, Secretary.

[FR Doc. 2013–10579 Filed 5–3–13; 8:45 am]

BILLING CODE 6331–01–M

DEPARTMENT OF DEFENSE

Office of the Secretary

[Transmittal Nos. 13–20]

36(b)(1) Arms Sales Notification

AGENCY: Defense Security Cooperation Agency, Department of Defense.

ACTION: Notice.

SUMMARY: The Department of Defense is publishing the unclassified text of a section 36(b)(1) arms sales notification. This is published to fulfill the requirements of section 155 of Public Law 104–164 dated July 21, 1996.

FOR FURTHER INFORMATION CONTACT: Ms. B. English, DSCA/DBO/CFM, (703) 601–3740.

The following is a copy of a letter to the Speaker of the House of Representatives, Transmittals 13–20 with attached transmittal, and policy justification.

Dated: May 1, 2013.

Aaron Siegel,

Alternate OSD Federal Register Liaison Officer, Department of Defense.

DEFENSE SECURITY COOPERATION AGENCY
201 12TH STREET SOUTH, STE 203
ARLINGTON, VA 22202-5408

APR 16 2013

The Honorable John A. Boehner
Speaker of the House
U.S. House of Representatives
Washington, DC 20515

Dear Mr. Speaker:

Pursuant to the reporting requirements of Section 36(b)(1) of the Arms Export Control Act, as amended, we are forwarding herewith Transmittal No. 13-20, concerning the Department of the Army's proposed Letter(s) of Offer and Acceptance to Israel for defense articles and services estimated to cost $2.67 billion. After this letter is delivered to your office, we plan to issue a press statement to notify the public of this proposed sale.

Sincerely,

William E. Landay III
Vice Admiral, USN
Director

Enclosures:
1. Transmittal
2. Policy Justification

Transmittal No. 13–20

Notice of Proposed Issuance of Letter of Offer

Pursuant to Section 36(b)(1) of the Arms Export Control Act, as amended

(i) Prospective Purchaser: Israel
(ii) *Total Estimated Value:*

Major Defense Equipment*	$0 billion
Other	$2.67 billion
Total	$2.67 billion

* As defined in Section 47(6) of the Arms Export Control Act.

(iii) *Description and Quantity or Quantities of Articles or Services under Consideration for Purchase:* 864,000,000 gallons of petroleum based products (JP–8 Aviation Fuel, Diesel Fuel, and Unleaded Gasoline).
(iv) *Military Department:* Army (ZVP–JP–8), (ZVQ-Diesel Fuel), (ZVR-Unleaded Gasoline).
(v) *Prior Related Cases, if any:* Numerous cases dating back to 1995.
(vi) *Sales Commission, Fee, etc., Paid, Offered, or Agreed to be Paid:* None.
(vii) *Sensitivity of Technology Contained in the Defense Article or Defense Services Proposed to be Sold:* None.
(viii) *Date Report Delivered to Congress:* 16 April 2013.

POLICY JUSTIFICATION

Israel—JP–8 Aviation Fuel, Diesel Fuel, and Unleaded Gasoline

The Government of Israel has requested a possible sale of 864,000,000 gallons of petroleum based products consisting of JP–8 aviation fuel, diesel fuel and unleaded gasoline. Due to volatility in the oil market, this

notification requests a total quantity of these various fuels rather than specific quantities of individual fuels. The estimated cost is $2.67 billion.

The United States is committed to the security of Israel, and it is vital to U.S. national interests to assist Israel to develop and maintain a strong and ready self-defense capability. This proposed sale is consistent with those objectives.

The proposed sale of the JP–8 aviation fuel will enable Israel to maintain the operational capability of its aircraft. The diesel fuel and unleaded gasoline will be used for Israeli ground vehicles. Israel will have no difficulty absorbing this additional fuel into its armed forces.

The proposed sale of these three types of fuel will not alter the basic military balance in the region and will provide Israel with the necessary flexibility to balance its individual fuel type needs as the situation requires.

The U.S. vendors are unknown at this time due to the competitive bid process for the supply source(s). There are no known offset agreements proposed in connection with this potential sale.

Implementation of this proposed sale will not require the assignment of any additional U.S. Government or contractor representatives to Israel.

There will be no adverse impact on U.S. defense readiness as a result of this proposed sale.

[FR Doc. 2013–10634 Filed 5–3–13; 8:45 am]

BILLING CODE 5001–06–P

DEPARTMENT OF DEFENSE

Office of the Secretary

[Transmittal Nos. 13–09]

36(b)(1) Arms Sales Notification

AGENCY: Department of Defense, Defense Security Cooperation Agency.

ACTION: Notice.

SUMMARY: The Department of Defense is publishing the unclassified text of a section 36(b)(1) arms sales notification. This is published to fulfill the requirements of section 155 of Public Law 104–164 dated July 21, 1996.

FOR FURTHER INFORMATION CONTACT: Ms. B. English, DSCA/DBO/CFM, (703) 601–3740.

The following is a copy of a letter to the Speaker of the House of Representatives, Transmittals 13–09 with attached transmittal, and policy justification.

Dated: May 1, 2013.

Aaron Siegel,

Alternate OSD Federal Register Liaison Officer, Department of Defense.

BILLING CODE 5001–06–P

DEFENSE SECURITY COOPERATION AGENCY
201 12TH STREET SOUTH, STE 203
ARLINGTON, VA 22202-5408

APR 16 2013

The Honorable John A. Boehner
Speaker of the House
U.S. House of Representatives
Washington, DC 20515

Dear Mr. Speaker:

Pursuant to the reporting requirements of Section 36(b)(1) of the Arms Export Control Act, as amended, we are forwarding herewith Transmittal No. 13-09, concerning the Department of the Navy's proposed Letter(s) of Offer and Acceptance to the United Kingdom for defense articles and services estimated to cost $170 million. After this letter is delivered to your office, we plan to issue a press statement to notify the public of this proposed sale.

Sincerely,

For William E. Landay III
Vice Admiral, USN
Director

Enclosures:
1. Transmittal
2. Policy Justification

Transmittal No. 13–09

Notice of Proposed Issuance of Letter of Offer Pursuant to Section 36(b)(1) of the Arms Export Control Act, as amended

(i) *Prospective Purchaser:* United Kingdom

(ii) *Total Estimated Value:*

Major Defense Equipment *	$0 million
Other	$170 million
TOTAL	$170 million

* as defined in Section 47(6) of the Arms Export Control Act.

(iii) *Description and Quantity or Quantities of Articles or Services under Consideration for Purchase:* follow-on support for the Tomahawk Weapon System (TWS) including missile modifications, maintenance, spare and repair parts, system and test equipment, engineering support, communications equipment, technical assistance, personnel training/equipment, and other related elements of logistics support.

(iv) *Military Department:* Navy (FAY).

(v) *Prior Related Cases, if any:*

FMS Case AGS–$154M–16Oct95
FMS Case AHA–$32M–26Aug99
FMS Case AHE–$36M–14Dec01
FMS Case GWY–$6M–20Jan00
FMS Case GYU–$33M–21Jan02
FMS Case LIS–$49M–18Jan04
FMS Case GXQ–$122M–27Nov00
FMS Case AHJ–$118M–26Mar04
FMS Case GEK–$122M–20Feb08.

(vi) *Sales Commission, Fee, etc., Paid, Offered, or Agreed to be Paid:* None.

(vii) *Sensitivity of Technology Contained in the Defense Article or Defense Services Proposed to be Sold:* None.

(viii) *Date Report Delivered to Congress:* 16 April 2013.

POLICY JUSTIFICATION

United Kingdom—Follow-On Support for Tomahawk Weapon System (TWS)

The United Kingdom (UK) has requested a possible sale of follow-on support for the Tomahawk Weapon System (TWS) to include missile modifications, maintenance, spare and repair parts, system and test equipment, engineering support, communications equipment, technical assistance, personnel training/equipment, and other related elements of logistics support. The estimated cost is $170 million.

The United Kingdom is a major political and economic power and a key democratic partner of the U.S. in ensuring peace and stability around the world.

The proposed sale of follow-on support will allow the United Kingdom to continue life cycle support of its TWS and maintain operational effectiveness. The United Kingdom requests support for this capability to provide for the safety of its deployed troops, regional security, and interoperability with the United States. The United Kingdom will have no difficulty absorbing this follow-on support into its armed forces.

The proposed sale of this follow-on support and equipment will not alter the basic military balance in the region.

The principal contractors will be Raytheon Missile Systems Company in Tucson, Arizona; Lockheed Martin in Manassas, Virginia, Valley Forge, Pennsylvania, and Marlton, New Jersey; The Boeing Company in St. Louis, Missouri; BAE North America in San Diego, California; COMGLOBAL in San Jose, California; and SAIC in Springfield, Virginia and Patuxent River, Maryland. There are no known offset agreements proposed in connection with this potential sale.

Implementation of this proposed sale will require the assignment of one (1) U.S. Government and two (2) contractor representatives to the United Kingdom for the duration of this case.

There will be no adverse impact on U.S. defense readiness as a result of this proposed sale.

[FR Doc. 2013–10631 Filed 5–3–13; 8:45 am]

BILLING CODE 5001–06–C

DEPARTMENT OF DEFENSE

Office of the Secretary

[Transmittal Nos. 13–06]

36(b)(1) Arms Sales Notification

AGENCY: Defense Security Cooperation Agency, Department of Defense.

ACTION: Notice.

SUMMARY: The Department of Defense is publishing the unclassified text of a section 36(b)(1) arms sales notification. This is published to fulfill the requirements of section 155 of Public Law 104–164 dated July 21, 1996.

FOR FURTHER INFORMATION CONTACT: Ms. B. English, DSCA/DBO/CFM, (703) 601–3740.

The following is a copy of a letter to the Speaker of the House of Representatives, Transmittals 13–06 with attached transmittal, and policy justification.

Dated: May 1, 2013.

Aaron Siegel,

Alternate OSD Federal Register Liaison Officer, Department of Defense.

BILLING CODE 5001–06–P

DEFENSE SECURITY COOPERATION AGENCY
201 12TH STREET SOUTH, STE 203
ARLINGTON, VA 22202-5408

APR 16 2013

The Honorable John A. Boehner
Speaker of the House
U.S. House of Representatives
Washington, DC 20515

Dear Mr. Speaker:

Pursuant to the reporting requirements of Section 36(b)(1) of the Arms Export Control Act, as amended, we are forwarding herewith Transmittal No. 13-06, concerning the Department of the Air Force's proposed Letter(s) of Offer and Acceptance to the North Atlantic Treaty Organization for defense articles and services estimated to cost $300 million. After this letter is delivered to your office, we plan to issue a press statement to notify the public of this proposed sale.

Sincerely,

FOR William E. Landay III
Vice Admiral, USN
Director

Enclosures:
1. Transmittal
2. Policy Justification

Transmittal No. 13–06

Notice of Proposed Issuance of Letter of Offer Pursuant to Section 36(b)(1) of the Arms Export Control Act, as amended (U)

(i) *Prospective Purchaser:* North Atlantic Treaty Organization

(ii) *Total Estimated Value:*

Major Defense Equipment *	$0 million.
Other	$300 million.
TOTAL	$300 million.

* As defined in Section 47(6) of the Arms Export Control Act.

(iii) *Description and Quantity or Quantities of Articles or Services under Consideration for Purchase:* follow-on contractor logistics support for NATO Airlift Management Program C–17 aircraft, to include participation in the Global Reach Improvement Program, alternate mission equipment, publications and technical data, spare and repair parts, support equipment, personnel training and training equipment, U.S. Government and contractor technical assistance and other related elements of logistics support.

(iv) *Military Department:* Air Force (QAG).

(v) *Prior Related Cases, if any:* FMS case QAA–$301M–3Dec08.

(vi) *Sales Commission, Fee, etc., Paid, Offered, or Agreed to be Paid:* None.

(vii) *Sensitivity of Technology Contained in the Defense Articles or Defense Services Proposed to be Sold:* None.

(viii) *Date Report Delivered to Congress:* 16 April 2013.

POLICY JUSTIFICATION

NATO—C–17 Follow-On Support

An international consortium made up of allies in the North Atlantic Treaty Organization (NATO) together with Sweden and Finland, requests a possible sale of follow-on contractor logistics support for NATO Airlift Management Program C–17 aircraft, to include participation in the Global Reach Improvement Program, alternate mission equipment, publications and technical data, spare and repair parts, support equipment, personnel training and training equipment, U.S. Government and contractor technical assistance and other related elements of logistics support. The estimated cost is $300 million.

This proposed sale of contractor logistics support will contribute to the foreign policy and national security objectives of the United States by improving the military capabilities of NATO and furthering weapon system standardization and interoperability with U.S. forces. NATO allies have used C–17 aircraft to increase the capability, usability, and deployability of their forces.

The proposed sale of support will allow the NATO Airlift Management Program Office to continue to maintain and operate NATO C–17s in support of NATO missions.

The proposed sale of this equipment and support will not alter the basic military balance in the region.

This prime contractor will be The Boeing Company in Huntington Beach, California. There are no known offset agreements proposed in connection with this potential sale.

There will be no adverse impact on U.S. defense readiness as a result of this proposed sale.

[FR Doc. 2013–10630 Filed 5–3–13; 8:45 am]

BILLING CODE 5001–06–C

DEPARTMENT OF DEFENSE

Office of the Secretary

[Transmittal Nos. 13–16]

36(b)(1) Arms Sales Notification

AGENCY: Defense Security Cooperation Agency, Department of Defense.

ACTION: Notice.

SUMMARY: The Department of Defense is publishing the unclassified text of a section 36(b)(1) arms sales notification. This is published to fulfill the requirements of section 155 of Public Law 104–164 dated July 21, 1996.

FOR FURTHER INFORMATION CONTACT: Ms. B. English, DSCA/DBO/CFM, (703) 601–3740.

The following is a copy of a letter to the Speaker of the House of Representatives, Transmittals 13–16 with attached transmittal, policy justification, and Sensitivity of Technology.

Dated: May 1, 2013.

Aaron Siegel,

Alternate OSD Federal Register Liaison Officer, Department of Defense.

DEFENSE SECURITY COOPERATION AGENCY
201 12TH STREET SOUTH, STE 203
ARLINGTON, VA 22202-5408

APR 16 2013

The Honorable John A. Boehner
Speaker of the House
U.S. House of Representatives
Washington, DC 20515

Dear Mr. Speaker:

Pursuant to the reporting requirements of Section 36(b)(1) of the Arms Export Control Act, as amended, we are forwarding herewith Transmittal No. 13-16, concerning the Department of the Air Force's proposed Letter(s) of Offer and Acceptance to the United Kingdom for defense articles and services estimated to cost $95 million. After this letter is delivered to your office, we plan to issue a press statement to notify the public of this proposed sale.

Sincerely,

William E. Landay III
Vice Admiral, USN
Director

Enclosures:
1. Transmittal
2. Policy Justification
3. Sensitivity of Technology

Transmittal No. 13–16

Notice of Proposed Issuance of Letter of Offer Pursuant to Section 36(b)(1) of the Arms Export Control Act, as amended

(i) *Prospective Purchaser:* United Kingdom

(ii) *Total Estimated Value:*

Major Defense Equipment *	$75 million.
Other	*$20 million*
TOTAL	$95 million

* As defined in Section 47(6) of the Arms Export Control Act.

(iii) *Descriptionand Quantity or Quantities of Articles or Services under Consideration for Purchase:* 500 AGM–114–N4/P4 HELLFIRE missiles.

(iv) *Military Department:* Air Force (YAY).

(v) *Prior Related Cases, if any:*

FMS Case UK–B–WKG—$113,000—Apr 1998

FMS Case UK–B–WKI—$21M—Sep 2007

FMS Case UK- D–YAC—$22M—May 2008

FMS Case UK–D–YAF—$21M—Mar 2011.

(vi) *Sales Commission, Fee, etc., Paid, Offered, or Agreed to be Paid:* None.

(vii) *Sensitivity of Technology Contained in the Defense Article or Defense Services Proposed to be Sold: See Attached Annex.*

(viii) *Date Report Delivered to Congress:* 16 April 2013.

POLICY JUSTIFICATION

United Kingdom– HELLFIRE Missiles

The Government of the United Kingdom (UK) has requested a possible sale of 500 AGM–114–N4/P4 HELLFIRE

missiles. The estimated cost is $95 million.

This program will directly contribute to the U.S. foreign and national security policies by enhancing the close air support capability of the United Kingdom in support of NATO, ISAF, and other coalition operations. Common close air support capabilities greatly increases interoperability between our two countries' military and peacekeeping forces and allow for greater burden sharing.

The proposed sale will support the UK's ability to meet current and future threats by providing close air support to counter enemy attacks on coalition ground forces in Afghanistan. The UK, which already has HELLFIRE missiles in its inventory, will have no difficulty absorbing these additional missiles.

The proposed sale of this equipment and support will not alter the basic military balance in the region.

The prime contractor will be Lockheed Martin Corporation of Orlando, Florida. There are no known offset agreements proposed in connection with this potential sale.

Implementation of this proposed sale will not require the assignment of any additional U.S. Government or contractor representatives to the United Kingdom.

There will be no adverse impact on U.S. defense readiness as a result of this proposed sale.

Transmittal No. 13–16

Notice of Proposed Issuance of Letter of Offer Pursuant to Section 36(b)(1) of the Arms Export Control Act

Annex

Item No. vii

(vii) *Sensitivity of Technology:*

1. The AGM–114–N4/P4 HELLFIRE missile is a rail-launched guided missile with a maximum direct-fire range of 9000 meters. The AGM–114–N4/P4 variant contains a shaped charge warhead and a Semi-Active Laser (SAL) seeker, while the variant contains a blast/fragmentation warhead and a SAL seeker. SAL missiles home on laser energy reflected off a target that has been illuminated by a laser designator. The weapon system hardware, components, training, and documentation provided with the sale thereof are confidential. Software sensitivity is primarily in the programs that instruct the system on how to operate in the presence of countermeasures.

2. If a technologically advanced adversary were to obtain knowledge of the specific hardware and software elements, the information could be used to develop countermeasures or equivalent systems which might reduce system effectiveness or be used in the development of a system with similar or advanced capabilities.

[FR Doc. 2013–10633 Filed 5–3–13; 8:45 am]

BILLING CODE 5001–06–C

DEPARTMENT OF DEFENSE

Office of the Secretary

[Transmittal Nos. 13–14]

36(b)(1) Arms Sales Notification

AGENCY: Defense Security Cooperation Agency, Department of Defense.

ACTION: Notice.

SUMMARY: The Department of Defense is publishing the unclassified text of a section 36(b)(1) arms sales notification. This is published to fulfill the requirements of section 155 of Public Law 104–164 dated July 21, 1996.

FOR FURTHER INFORMATION CONTACT: Ms. B. English, DSCA/DBO/CFM, (703) 601–3740.

The following is a copy of a letter to the Speaker of the House of Representatives, Transmittals 13–14 with attached transmittal, policy justification, and Sensitivity of Technology.

Dated: May 1, 2013.

Aaron Siegel,

Alternate OSD Federal Register Liaison Officer, Department of Defense.

BILLING CODE 5001–06–P

DEFENSE SECURITY COOPERATION AGENCY
201 12TH STREET SOUTH, STE 203
ARLINGTON, VA 22202-5408

APR 16 2013

The Honorable John A. Boehner
Speaker of the House
U.S. House of Representatives
Washington, DC 20515

Dear Mr. Speaker:

Pursuant to the reporting requirements of Section 36(b)(1) of the Arms Export Control Act, as amended, we are forwarding herewith Transmittal No. 13-14, concerning the Department of the Air Force's proposed Letter(s) of Offer and Acceptance to Kuwait for defense articles and services estimated to cost $371 million. After this letter is delivered to your office, we plan to issue a press statement to notify the public of this proposed sale.

Sincerely,

William E. Landay III
Vice Admiral, USN
Director

Enclosures:
1. Transmittal
2. Policy Justification
3. Sensitivity of Technology
4. Regional Balance (Classified Document Provided under Separate Cover)

Transmittal No. 13–14

Notice of Proposed Issuance of Letter of Offer Pursuant to Section 36(b)(1) of the Arms Export Control Act, as amended

(i) *Prospective Purchaser:* Kuwait

(ii) *Total Estimated Value:*

Major Defense Equipment *	$301 million.
Other	$70 million.
TOTAL	$371 million.

* As defined in Section 47(6) of the Arms Export Control Act.

(iii) *Description and Quantity or Quantities of Articles or Services under Consideration for Purchase:* 1 C–17 GLOBEMASTER III aircraft, 4 Turbofan F117–PW–100 Engines, 1 AN/AAR–47 Missile Approach Warning System, 1 AN/ALE–47 Countermeasure Dispenser Set (CMDS), secure radios, precision navigation equipment, spare and repair parts, support and test equipment, publications and technical documentation, tactics manuals, personnel training and training equipment, U.S. Government and contractor engineering, aircraft ferry support, aircraft fuel, and technical and logistics support services; and related elements of initial and follow-on logistical and program support.

(iv) *Military Department:* United States Air Force (USAF) (SAA A01).

(v) *Prior Related Cases, if any:* KU–D–SAA, Transmittal No. 10–51.

(vi) *Sales Commission, Fee, etc., Paid, Offered, or Agreed to be Paid:* None.

(vii) *Sensitivity of Technology Contained in the Defense Article or Defense Services Proposed to be Sold:* See Attached Annex.

(viii) *Date Report Delivered to Congress:* 16 April 2013.

POLICY JUSTIFICATION

Kuwait—C–17 GLOBEMASTER III

The Government of Kuwait has requested a possible sale of 1 C–17 GLOBEMASTER III aircraft, 4 Turbofan F117–PW–100 Engines, 1 AN/AAR–47 Missile Approach Warning System, 1 AN/ALE–47 Countermeasure Dispenser Set (CMDS), secure radios, precision navigation equipment, spare and repair parts, support and test equipment, publications and technical documentation, tactics manuals, personnel training and training equipment, U.S. Government and contractor engineering, aircraft ferry support, aircraft fuel, and technical and logistics support services; and related elements of initial and follow-on logistical and program support. The estimated cost is $371 million.

Kuwait continues to be a key ally and strong supporter of U.S. foreign policy and national security goals in the Persian Gulf region. The proposed sale will enhance the United States foreign policy and national security objectives by increasing interoperability among the Kuwait Air Force (KAF), the United States Air Force, Gulf Cooperation Council countries, and other coalition forces. The relationships built upon current flying operations will enhance the U.S. Air Force's influence and access in Kuwait.

The provision of a second C–17 provides KAF a more robust regional airlift and long-range strategic airlift capability. The additional C–17 aircraft will allow the KAF to better participate in humanitarian support operations.

The proposed sale of this equipment and support will not alter the basic military balance in the region.

The prime contractor will be The Boeing Company of Chicago, Illinois. There are no known offset agreements proposed in connection with this potential sale.

Implementation of this proposed sale will require multiple U.S. Government or contractor representatives to travel to Kuwait for a period of (5) five years to establish and maintain operational capability.

There will be no adverse impact on U.S. defense readiness as a result of this proposed sale.

Transmittal No. 13–14

Notice of Proposed Issuance of Letter of Offer Pursuant to Section 36(b)(1) of the Arms Export Control Act

Annex

Item No. vii

(vii) *Sensitivity of Technology:*

1. The Boeing C–17 GLOBEMASTER III military airlift aircraft is the newest, most flexible cargo aircraft to enter the U.S. Air Force fleet. The C–17 is capable of rapid, strategic delivery of up to 170,900 pounds of personnel and equipment to main operating bases or to forward operating bases. The aircraft is also capable of short field landings with a full cargo load. Finally, the aircraft can perform tactical airlift and airdrop missions and can also transport litters and ambulatory patients during aeromedical evacuations when required. A fully integrated electronic cockpit and advanced cargo systems allow a crew of three: the pilot, copilot and loadmaster, to operate the aircraft on any type of mission.

2. The AN/ALE–47 Counter-Measures Dispensing System (CMDS) is an integrated, threat-adaptive, software-programmable dispensing system capable of dispensing chaff, flares, and active radio frequency expendables. The threats countered by the CMDS include radar-directed anti-aircraft artillery (AAA), radar command-guided missiles, radar homing guided missiles, and infrared (IR) guided missiles. The system is internally mounted and may be operated as a stand-alone system or may be integrated with other on-board EW and avionics systems. The AN/ALE–47 uses threat data received over the aircraft interfaces to assess the threat situation and to determine a response. Expendable routines tailored to the immediate aircraft and threat environment may be dispensed using one of four operational modes. The hardware, technical data, and documentation to be provided are Unclassified.

3. The AN/AAR–47 missile warning system is a small, lightweight, passive, electro-optic, threat warning device used to detect surface-to-air missiles fired at helicopters and low-flying fixed-wing aircraft and automatically provide countermeasures, as well as audio and visual-sector warning messages to the aircrew. The basic system consists of multiple Optical Sensor Converter (OSC) units, a Computer Processor (CP) and a Control Indicator (CI). The set of OSC units, which normally consist of four, is mounted on the aircraft exterior to provide omni-directional protection. The OSC detects the rocket plume of missiles and sends appropriate signals to the CP for processing. The CP analyzes the data from each OSC and automatically deploys the appropriate countermeasures. The CP also contains comprehensive BIT circuitry. The CI displays the incoming direction of the threat, so the pilot can take appropriate action.

4. If a technologically advanced adversary were to obtain knowledge of the specific hardware or software in this proposed sale, the information could be used to develop countermeasures that might reduce system effectiveness or be used in the development of a system with similar or advanced capabilities.

[FR Doc. 2013–10632 Filed 5–3–13; 8:45 am]

BILLING CODE 5001–06–C

DEPARTMENT OF EDUCATION

[Docket No.: ED–2013–ICCD–0061]

Agency Information Collection Activities; Comment Request; 2014–2015 Federal Student Aid Application

AGENCY: Federal Student Aid (FSA), Department of Education (ED).

ACTION: Notice.

SUMMARY: In accordance with the Paperwork Reduction Act of 1995 (44 U.S.C. chapter 3501 *et seq.*), ED is proposing a revision of an existing information collection.

DATES: Interested persons are invited to submit comments on or before July 5, 2013.

ADDRESSES: Comments submitted in response to this notice should be submitted electronically through the Federal eRulemaking Portal at *http://www.regulations.gov* by selecting Docket ID number ED–2013–ICCD–0061 or via postal mail, commercial delivery, or hand delivery. Please note that comments submitted by fax or email and those submitted after the comment period will not be accepted. Written requests for information or comments submitted by postal mail or delivery should be addressed to the Director of the Information Collection Clearance Division, U.S. Department of Education, 400 Maryland Avenue SW., LBJ, Room 2E105, Washington, DC 20202–4537.

FOR FURTHER INFORMATION CONTACT: Electronically mail *ICDocketMgr@ed.gov* or fax to 202–401–0920. Please do not send comments here. Individuals who use a telecommunications device for the deaf (TDD) may call FIRS at 1–800–877–8339 between 8 a.m. and 8 p.m. Eastern time, Monday through Friday.

SUPPLEMENTARY INFORMATION: The Department of Education (ED), in

accordance with the Paperwork Reduction Act of 1995 (PRA) (44 U.S.C. 3506(c)(2)(A)), provides the general public and Federal agencies with an opportunity to comment on proposed, revised, and continuing collections of information. This helps ED assess the impact of its information collection requirements and minimize the public's reporting burden. It also helps the public understand the ED's information collection requirements and provide the requested data in the desired format. ED is soliciting comments on the proposed information collection request (ICR) that is described below. ED is especially interested in public comments addressing the following issues: (1) Is this collection necessary to the proper functions of ED; (2) will this information be processed and used in a timely manner; (3) is the estimate of burden accurate; (4) how might ED enhance the quality, utility, and clarity of the information to be collected; and (5) how might ED minimize the burden of this collection on the respondents, including through the use of information technology. Please note that written comments received in response to this notice will be considered public records.

Title of Collection: 2014–2015 Federal Student Aid Application.

OMB Control Number: 1845–0001.

Type of Review: A revision of an existing information collection.

Respondents/Affected Public: Individuals.

Total Estimated Number of Annual Responses: 47,401,966.

Total Estimated Number of Annual Burden Hours: 26,164,366.

Abstract: Section 483 of the Higher Education Act of 1965, as amended (HEA), mandates that the Secretary of Education ''. . . shall produce, distribute, and process free of charge common financial reporting forms as described in this subsection to be used for application and reapplication to determine the need and eligibility of a student for financial assistance . . .''.

The determination of need and eligibility are for the following title IV, HEA, federal student financial assistance programs: The Federal Pell Grant Program; the Campus-Based programs (Federal Supplemental Educational Opportunity Grant (FSEOG), Federal Work-Study (FWS), and the Federal Perkins Loan Program); the William D. Ford Federal Direct Loan Program; the Teacher Education Assistance for College and Higher Education (TEACH) Grant; and the Iraq and Afghanistan Service Grant.

Federal Student Aid, an office of the U.S. Department of Education (hereafter ''the Department''), subsequently developed an application process to collect and process the data necessary to determine a student's eligibility to receive Title IV, HEA program assistance. The application process involves an applicant's submission of the Free Application for Federal Student Aid (FAFSA). After submission of the FAFSA, an applicant receives a Student Aid Report (SAR), which is a summary of the data they submitted on the FAFSA. The applicant reviews the SAR, and, if necessary, will make corrections or updates to their submitted FAFSA data. Institutions of higher education listed by the applicant on the FAFSA also receive a summary of processed data submitted on the FAFSA which is called the Institutional Student Information Record (ISIR).

The Department seeks OMB approval of all application components as a single ''collection of information''. The aggregate burden will be accounted for under OMB Control Number 1845–0001. The specific application components, descriptions and submission methods for each are listed in Table 1.

TABLE 1—FEDERAL STUDENT AID APPLICATION COMPONENTS

Component	Description	Submission method
Initial Submission of FAFSA		
FAFSA on the Web (FOTW)	Online FAFSA that offers applicants a customized experience.	Submitted by the applicant via *www.fafsa.gov.*
FOTW—Renewal	Online FAFSA for applicants who have previously completed the FAFSA.	
FOTW–EZ	Online FAFSA for applicants who qualify for the Simplified Needs Test (SNT) or Automatic Zero (Auto Zero) needs analysis formulas.	
FOTW–EZ Renewal	Online FAFSA for applicants who have previously completed the FAFSA and who qualify for the SNT or Auto Zero needs analysis formulas.	
FAFSA on the Phone (FOTP).	The Federal Student Aid Information Center (FSAIC) representatives assist applicants by filing the FAFSA on their behalf through FOTW.	Submitted through *www.fafsa.gov* for applicants who call 1–800–4–FED–AID.
FOTP–EZ	FSAIC representatives assist applicants who qualify for the SNT or Auto Zero needs analysis formulas by filing the FAFSA on their behalf through FOTW.	
FAA Access	Online tool that a financial aid administrator (FAA) utilizes to submit a FAFSA.	Submitted through *www.faaacess.ed.gov* by a FAA on behalf of an applicant.
FAA Access–Renewal	Online tool that a FAA can utilize to submit a Renewal FAFSA.	
FAA Access–EZ	Online tool that a FAA can utilize to submit a FAFSA for applicants who qualify for the SNT or Auto Zero needs analysis formulas.	
FAA Access–EZ Renewal	Online tool that a FAA can utilize to submit a FAFSA for applicants who have previously completed the FAFSA and who qualify for the SNT or Auto Zero needs analysis formulas.	
Electronic Other	This is a submission done by a FAA, on behalf of the applicant, using the Electronic Data Exchange (EDE).	The FAA may be using their mainframe computer or software to facilitate the EDE process.

TABLE 1—FEDERAL STUDENT AID APPLICATION COMPONENTS—Continued

Component	Description	Submission method
PDF FAFSA or Paper FAFSA.	The paper version of the FAFSA printed by the Department for applicants who are unable to access the Internet or the online PDF FAFSA for applicants who can access the Internet but are unable to complete the form using FOTW.	Mailed by the applicant.
Correcting Submitted FAFSA Information and Reviewing FAFSA Information		
FOTW—Corrections	Any applicant who has a Federal Student Aid PIN (FSA PIN)—regardless of how they originally applied—may make corrections using FOTW Corrections.	Submitted by the applicant via *www.fafsa.gov.*
Electronic Other—Corrections.	With the applicant's permission, corrections can be made by a FAA using the EDE.	The FAA may be using their mainframe computer or software to facilitate the EDE process.
Paper SAR—This is a SAR and an option for corrections.	The full paper summary that is mailed to paper applicants who did not provide an email address and to applicants whose records were rejected due to critical errors during processing. Applicants can write corrections directly on the paper SAR and mail for processing.	Mailed by the applicant.
FAA Access—Corrections	An institution can use FAA Access to correct the FAFSA.	Submitted through *www.faaacess.ed.gov* by a FAA on behalf of an applicant.
Internal Department Corrections.	The Department will submit an applicant's record for system-generated corrections.	There is no burden to the applicants under this correction type as these are system-based corrections.
FSAIC Corrections	Any applicant, with their Data Release Number (DRN), can change the postsecondary institutions listed on their FAFSA or change their address by calling FSAIC.	These changes are made directly in the CPS system by a FSAIC representative.
SAR Electronic (eSAR)	The eSAR is an online version of the SAR that is available on FOTW to all applicants with a PIN. Notifications for the eSAR are sent to students who applied electronically or by paper and provided an email address. These notifications are sent by email and include a secure hyperlink that takes the user to the FOTW site.	Cannot be submitted for processing.

This information collection also documents an estimate of the annual public burden as it relates to the application process for federal student aid. The Applicant Burden Model (ABM), measures applicant burden through an assessment of the activities each applicant conducts in conjunction with other applicant characteristics and in terms of burden, the average applicant's experience. Key determinants of the ABM include:

□ The total number of applicants that will potentially apply for federal student aid;

□ How the applicant chooses to complete and submit the FAFSA (e.g., by paper or electronically via FOTW);

□ How the applicant chooses to submit any corrections and/or updates (e.g., the paper SAR or electronically via FOTW Corrections);

□ The type of SAR document the applicant receives (eSAR, SAR acknowledgment, or paper SAR);

□ The formula applied to determine the applicant's expected family contribution (EFC) (full need analysis formula, Simplified Needs Test or Automatic Zero); and

□ The average amount of time involved in preparing to complete the application.

The ABM is largely driven by the number of potential applicants for the application cycle. The total application projection for 2014–2015 is based upon two factors—estimates of the total enrollment in all degree-granting institutions and the percentage change in FAFSA submissions for the last completed or almost completed application cycle. The ABM is also based on the application options available to students and parents. The Department accounts for each application component based on web trending tools, survey information, and other Department data sources.

For 2014–2015, the Department is reporting a net burden increase of 204,513 hours attributed to the increase in applicants. We project that the changes explained in the Summary of Enhancements (see 2014–2015 *Enhancements to the Free Application for Federal Student Aid*) will not substantively impact burden.

Dated: April 30, 2013.

Stephanie Valentine,

Acting Director, Information Collection Clearance Division, Privacy, Information and Records Management Services, Office of Management.

[FR Doc. 2013–10600 Filed 5–3–13; 8:45 am]

BILLING CODE 4000–01–P

DEPARTMENT OF EDUCATION

[Docket No. ED–2013–ICCD–0021]

Agency Information Collection Activities; Submission to the Office of Management and Budget for Review and Approval; Comment Request; Program for the International Assessment of Adult Competencies (PIAAC) National Supplement Data Collection 2013–2014

AGENCY: Institute for Education Sciences/National Center for Education Statistics (IES/NCES), Department of Education (ED).

ACTION: Notice.

SUMMARY: In accordance with the Paperwork Reduction Act of 1995 (44 U.S.C. chapter 3501 *et seq.*), ED is

proposing a revision of an existing information collection.

DATES: Interested persons are invited to submit comments on or before June 5, 2013.

ADDRESSES: Comments submitted in response to this notice should be submitted electronically through the Federal eRulemaking Portal at *http://www.regulations.gov* by selecting Docket ID number ED–2013–ICCD–0021 or via postal mail, commercial delivery, or hand delivery. Please note that comments submitted by fax or email and those submitted after the comment period will not be accepted. Written requests for information or comments submitted by postal mail or delivery should be addressed to the Director of the Information Collection Clearance Division, U.S. Department of Education, 400 Maryland Avenue SW., LBJ, Room 2E105, Washington, DC 20202–4537.

FOR FURTHER INFORMATION CONTACT: Electronically mail *ICDocketMgr@ed.gov.* Please do not send comments here.

SUPPLEMENTARY INFORMATION: The Department of Education (ED), in accordance with the Paperwork Reduction Act of 1995 (PRA) (44 U.S.C. 3506(c)(2)(A)), provides the general public and Federal agencies with an opportunity to comment on proposed, revised, and continuing collections of information. This helps the Department assess the impact of its information collection requirements and minimize the public's reporting burden. It also helps the public understand the Department's information collection requirements and provide the requested data in the desired format. ED is soliciting comments on the proposed information collection request (ICR) that is described below. The Department of Education is especially interested in public comment addressing the following issues: (1) Is this collection necessary to the proper functions of the Department; (2) will this information be processed and used in a timely manner; (3) is the estimate of burden accurate; (4) how might the Department enhance the quality, utility, and clarity of the information to be collected; and (5) how might the Department minimize the burden of this collection on the respondents, including through the use of information technology. Please note that written comments received in response to this notice will be considered public records.

Title of Collection: Program for the International Assessment of Adult Competencies (PIAAC) National Supplement Data Collection 2013–2014.

OMB Control Number: 1850–0870.

Type of Review: Revision of an existing collection of information.

Respondents/Affected Public: Individuals and households.

Total Estimated Number of Annual Responses: 22,503.

Total Estimated Number of Annual Burden Hours: 6,927.

Abstract: This submission is for the 2013–14 administration of the Program for the International Assessment of Adult Competencies (PIAAC) National Supplement data collection to survey adults (16–74 years old) in households and federal and state prisons. The PIAAC National Supplement builds upon the 2011–12 PIAAC Main Study, which was coordinated by the Organization for Economic Cooperation and Development (*http://www.oecd.org/*), sponsored by the U.S. Departments of Education and Labor in the United States, and included data collection in 23 countries in addition to the United States. PIAAC assesses adult literacy, numeracy, and problem-solving skills in technology-rich environments and collects survey information from respondents about their education and employment experience and about the skills they use at work. PIAAC builds on previous international literacy assessments including the 2002 Adult Literacy and Lifeskills Survey and the 1994–98 International Adult Literacy Survey. The PIAAC National Supplement data collection will occur between August 2013 and April 2014.

Dated: April 30, 2013.

Stephanie Valentine,

Acting Director, Information Collection Clearance Division, Privacy, Information and Records Management Services, Office of Management.

[FR Doc. 2013–10599 Filed 5–3–13; 8:45 am]

BILLING CODE 4000–01–P

DEPARTMENT OF ENERGY

[Certification Notice—223]

Notice of Filing of Self-Certification of Coal Capability Under the Powerplant and Industrial Fuel Use Act

AGENCY: Office of Electricity Delivery and Energy Reliability, DOE.

ACTION: Notice of Filing.

SUMMARY: On April 11, 2013, CPV Shore, LLC, as owner and operator of a new base load electric powerplant, submitted a coal capability self-certification to the Department of Energy (DOE) pursuant to § 201(d) of the Powerplant and Industrial Fuel Use Act of 1978 (FUA), as amended, and DOE regulations in 10 CFR 501.60, 61. FUA and regulations thereunder require DOE to publish a notice of filing of self-certification in the **Federal Register.** 42 U.S.C. 8311(d) and 10 CFR 501.61(c).

ADDRESSES: Copies of coal capability self-certification filings are available for public inspection, upon request, in the Office of Electricity Delivery and Energy Reliability, Mail Code OE–20, Room 8G–024, Forrestal Building, 1000 Independence Avenue SW., Washington, DC 20585.

FOR FURTHER INFORMATION CONTACT: Christopher Lawrence at (202) 586–5260.

SUPPLEMENTARY INFORMATION: Title II of FUA, as amended (42 U.S.C. 8301 *et seq.*), provides that no new base load electric powerplant may be constructed or operated without the capability to use coal or another alternate fuel as a primary energy source. Pursuant to FUA in order to meet the requirement of coal capability, the owner or operator of such a facility proposing to use natural gas or petroleum as its primary energy source shall certify to the Secretary of Energy (Secretary) prior to construction, or prior to operation as a base load electric powerplant, that such powerplant has the capability to use coal or another alternate fuel. Such certification establishes compliance with FUA section 201(a) as of the date it is filed with the Secretary. 42 U.S.C. § 8311.

The following owner of a proposed new base load electric powerplant has filed a self-certification of coal-capability with DOE pursuant to FUA section 201(d) and in accordance with DOE regulations in 10 CFR 501.60, 61:

Owner: CPV Shore, LLC.
Capacity: 725 megawatts (MW).
Plant Location: Keasbey, NJ.
In-Service Date: Early as June 2015.

Issued in Washington, DC, on April 30, 2013.

Brian Mills,

Director, Permitting and Siting, Office of Electricity Delivery and Energy Reliability.

[FR Doc. 2013–10665 Filed 5–3–13; 8:45 am]

BILLING CODE 6450–01–P

DEPARTMENT OF ENERGY

Methane Hydrate Advisory Committee

AGENCY: Office of Fossil Energy, Department of Energy.

ACTION: Notice of Open Meeting.

SUMMARY: This notice announces a meeting of the Methane Hydrate Advisory Committee. The Federal Advisory Committee Act (Pub. L. 92–463, 86 Stat. 770) requires that notice of these meetings be announced in the **Federal Register**.

DATES: Thursday, June 6, 2013
1:30 p.m. to 2:00 p.m. (EDT)—Registration
2:00 p.m. to 5:00 p.m. (EDT)—Meeting
Friday, June 7, 2013
7:45 a.m. to 8:00 a.m. (EDT)—Registration
8:00 a.m. to 12:30 p.m. (EDT)—Meeting

ADDRESSES: U.S. Department of Energy, Forrestal Building, Room 5E–069, 1000 Independence Ave. SW., Washington, DC 20585.

FOR FURTHER INFORMATION CONTACT: Lou Capitanio, U.S. Department of Energy, Office of Oil and Natural Gas, 1000 Independence Avenue SW., Washington, DC 20585. *Phone:* (202) 586–5098.

SUPPLEMENTARY INFORMATION:

Purpose of the Committee: The purpose of the Methane Hydrate Advisory Committee is to provide advice on potential applications of methane hydrate to the Secretary of Energy, and assist in developing recommendations and priorities for the Department of Energy's Methane Hydrate Research and Development Program.

Tentative Agenda: The agenda will include: Welcome and Introduction by the Designated Federal Officer; Welcome by the Chair of the Committee; Committee Business; FY 2012 Arctic Production test—data and results; Update on the Bureau of Ocean Energy Management's Lower 48 Assessment; Results of Consortium for Ocean Leadership Workshop; Update on International Activity; FY 2013 Methane Hydrate Program Activities and Plans; Draft Interagency Roadmap; Methane Hydrate Program Budget; Methane Hydrate Program Strategic Direction; Advisory Committee Discussion; and Public Comments, if any.

Public Participation: The meeting is open to the public. The Designated Federal Officer and the Chair of the Committee will conduct the meeting to facilitate the orderly conduct of business. If you would like to file a written statement with the Committee, you may do so either before or after the meeting. If you would like to make oral statements regarding any of the items on the agenda, you should contact Lou Capitanio at the phone number listed above. You must make your request for an oral statement at least five business days prior to the meeting, and reasonable provisions will be made to include the presentation on the agenda. Public comment will follow the three-minute rule.

Minutes: The minutes of this meeting will be available for public review and copying within 60 days at the following Web site: *http://www.fe.doe.gov/programs/oilgas/hydrates/Methane_Hydrates_Advisory_Committee.html.*

Issued at Washington, DC, on April 30, 2013.

LaTanya R. Butler,

Deputy Committee Management Officer.

[FR Doc. 2013–10666 Filed 5–3–13; 8:45 am]

BILLING CODE 6450–01–P

DEPARTMENT OF ENERGY

Federal Energy Regulatory Commission

[Docket No. IC13–11–000]

Commission Information Collection Activities (FERC–539); Comment Request

AGENCY: Federal Energy Regulatory Commission, Energy.

ACTION: Comment request.

SUMMARY: In compliance with the requirements of the Paperwork Reduction Act of 1995, 44 U.S.C. 3507(a)(1)(D), the Federal Energy Regulatory Commission (Commission or FERC) is submitting the information collection FERC–539, Gas Pipeline Certificates: Import/Export Related, to the Office of Management and Budget (OMB) for review of the information collection requirements. Any interested person may file comments directly with OMB and should address a copy of those comments to the Commission as explained below. The Commission issued a Notice in the **Federal Register** (78 FR 12747, 02/25/2013) requesting public comments. FERC received no comments on the FERC–539 and is making this notation in its submittal to OMB.

DATES: Comments on the collection of information are due by June 5, 2013.

ADDRESSES: Comments filed with OMB, identified by the OMB Control No. 1902–0062, should be sent via email to the Office of Information and Regulatory Affairs: *oira_submission@omb.gov.* Attention: Federal Energy Regulatory Commission Desk Officer. The Desk Officer may also be reached via telephone at 202–395–4718.

A copy of the comments should also be sent to the Federal Energy Regulatory Commission, identified by the Docket No. IC13–11–000, by either of the following methods:

- *eFiling at Commission's Web site: http://www.ferc.gov/docs-filing/efiling.asp.*
- *Mail/Hand Delivery/Courier:* Federal Energy Regulatory Commission, Secretary of the Commission, 888 First Street NE., Washington, DC 20426.

Instructions: All submissions must be formatted and filed in accordance with submission guidelines at: *http://www.ferc.gov/help/submission-guide.asp.* For user assistance contact FERC Online Support by email at *ferconlinesupport@ferc.gov,* or by phone at: (866) 208–3676 (toll-free), or (202) 502–8659 for TTY.

Docket: Users interested in receiving automatic notification of activity in this docket or in viewing/downloading comments and issuances in this docket may do so at *http://www.ferc.gov/docs-filing/docs-filing.asp.*

FOR FURTHER INFORMATION CONTACT: Ellen Brown may be reached by email at *DataClearance@FERC.gov,* by telephone at (202) 502–8663, and by fax at (202) 273–0873.

SUPPLEMENTARY INFORMATION:

Title: Gas Pipeline Certificates: Import/Export Related.

OMB Control No.: 1902–0062.

Type of Request: Three-year extension of the FERC–539 information collection requirements with no changes to the current reporting requirements.

Abstract: Section 3 of the Natural Gas Act (NGA) [1] provides, in part, that ''. . . no person shall export any natural gas from the United States to a foreign country or import any natural gas from a foreign country without first having secured an order from the Commission authorizing it to do so.'' The 1992 amendments to Section 3 of the NGA concern importation or exportation from/to a nation which has a free trade agreement with the United States and requires that such importation or exportation: (1) Shall be deemed to be a ''first sale'' (i.e. not a sale for a resale) and (2) shall be deemed to be consistent with the public interest. Applications for such importation or exportation should be granted without modification or delay.

Type of Respondents: Facilities proposing to import or export natural gas.

Estimate of Annual Burden: [2] The Commission estimates the total Public Reporting Burden for this information collection as:

[1] 15 U.S.C. 717–717w.

[2] The Commission defines burden as the total time, effort, or financial resources expended by persons to generate, maintain, retain, or disclose or provide information to or for a Federal agency. For further explanation of what is included in the information collection burden, reference 5 Code of Federal Regulations 1320.3.

FERC–539—GAS PIPELINE CERTIFICATES: IMPORT/EXPORT RELATED

Number of respondents (A)	Number of responses per respondent (B)	Total number of responses (A) × (B) = (C)	Average burden hours per response (D)	Estimated total annual burden (C) × (D)
7	1	7	12	84

The total estimated annual cost burden to respondents is $5,880 [84 hours * $70/hour [3] = $5,880].

Comments: Comments are invited on: (1) Whether the collection of information is necessary for the proper performance of the functions of the Commission, including whether the information will have practical utility; (2) the accuracy of the agency's estimate of the burden and cost of the collection of information, including the validity of the methodology and assumptions used; (3) ways to enhance the quality, utility and clarity of the information collection; and (4) ways to minimize the burden of the collection of information on those who are to respond, including the use of automated collection techniques or other forms of information technology.

Dated: April 30, 2013.

Kimberly D. Bose,

Secretary.

[FR Doc. 2013–10642 Filed 5–3–13; 8:45 am]

BILLING CODE 6717–01–P

[3] Average salary (per hour) plus benefits per full-time equivalent employee.

DEPARTMENT OF ENERGY

Federal Energy Regulatory Commission

[Project No. 2355–018]

Exelon Generation Company, LLC; Notice of Application Accepted for Filing, Soliciting Motions To Intervene and Protests, Ready for Environmental Analysis, Soliciting Comments, Recommendations, Preliminary Terms and Conditions, and Preliminary Fishway Prescriptions, and Intent To Prepare an Environmental Impact Statement

Take notice that the following hydroelectric application has been filed with the Commission and is available for public inspection.

a. *Type of Application:* New Major License.

b. *Project No.:* 2355–018.

c. *Date Filed:* August 29, 2012.

d. *Applicant:* Exelon Generation Company, LLC.

e. *Name of Project:* Muddy Run Pumped Storage Project.

f. *Location:* On Muddy Run, a tributary to the Susquehanna River, in Lancaster and York Counties, Pennsylvania. The project does not occupy any federal lands.

g. *Filed Pursuant to:* Federal Power Act, 16 U.S.C. 791(a)–825(r).

h. *Applicant Contact:* Colleen Hicks, Manager, Regulatory and Licensing, Hydro, Exelon Power, 300 Exelon Way, Kennett Square, PA 19348, at (610) 765–6791 or email at *Colleen.Hicks@exeloncorp.com* and Kathleen Barròn, Vice President, Federal Regulatory Affairs and Wholesale Market Policy, Exelon Corporation, 101 Constitution Avenue, Washington, DC 20001, at (202) 347–7500 or email at *Kathleen.Barron2@exeloncorp.com.*

i. *FERC Contact:* Emily Carter, (202) 502–6512 or *emily.carter@ferc.gov.*

j. Deadline for filing motions to intervene and protests, comments, recommendations, preliminary terms and conditions, and preliminary fishway prescriptions is September 30, 2013; reply comments are due November 14, 2013.

Motions to intervene, protests, comments, recommendations, preliminary terms and conditions, and preliminary fishway prescriptions may be filed electronically via the Internet. See 18 CFR 385.2001(a)(1)(iii) and the instructions on the Commission's Web site *http://www.ferc.gov/docs-filing/efiling.asp.* Commenters can submit brief comments up to 6,000 characters, without prior registration, using the eComment system at *http://www.ferc.gov/docs-filing/ecomment.asp.* You must include your name and contact information at the end of your comments. For assistance, please contact FERC Online Support. Although the Commission strongly encourages electronic filing, documents may also be paper-filed. To paper-file, mail an original and seven copies to: Kimberly D. Bose, Secretary, Federal Energy Regulatory Commission, 888 First Street NE., Washington, DC 20426.

The Commission's Rules of Practice require all intervenors filing documents with the Commission to serve a copy of that document on each person on the official service list for the project. Further, if an intervenor files comments or documents with the Commission relating to the merits of an issue that may affect the responsibilities of a particular resource agency, they must also serve a copy of the document on that resource agency.

k. This application has been accepted for filing and is now ready for environmental analysis.

l. The existing Muddy Run Pumped Storage Project consists of four dams. The main dam is a rock-filled structure across the Muddy Run ravine with a central impervious core, a maximum height of approximately 260 feet and a total length of 4,800 feet. The east dike is a zoned-earth and rock-filled embankment with a maximum height of approximately 12 feet and a total length of 800 feet. The recreation pond dike is a zoned-earth and rock-filled embankment with a maximum height of approximately 90 feet and a total length of 750 feet. The canal embankment has a maximum height of approximately 35 feet. Total storage in the 900-acre Muddy Run reservoir (upper reservoir) is approximately 60,000 acre-feet and the total useable storage is approximately 35,500 acre-feet at the maximum pool elevation of 520 feet.[1] The maximum pool elevation is approximately 411 feet above the normal elevation of Conowingo pond. Conowingo pond (lower reservoir) has a surface area of 9,000 acres and design storage of approximately 310,000 acre-feet at the normal full pool elevation of 109.2 feet.

The main spillway is a non-gated concrete ogee-type structure that is 200 feet long, 20 feet high and with a crest elevation of 521 feet, which is directed to a vegetated natural ravine. The recreation pond spillway is a rock-cut channel approximately 140 feet wide and with a crest elevation of 520 feet.

The power intake facilities consist of four cylinder gates with trash racks in a cylindrical tower. Each intake supplies two units. Each intake leads to a 430-foot-deep vertical shaft then to a horizontal power tunnel, which divides into two sections. The power tunnel sections transition to a penstock that

[1] All elevations are referenced to National Geodetic Vertical Datum (NGVD) 1929.

leads to one of the eight reversible pump-turbine units in the powerhouse. The power plant is constructed of concrete and is 133 feet wide and 600 feet long. It houses eight Francis turbines each equipped with a 100-megawatt (MW) generator. The powerhouse turbines each have a hydraulic capacity of 4,000 cubic feet per second (cfs), for a total discharge capacity from the powerhouse of 32,000 cfs. The pumping capacity of the pump turbines is 3,500 cfs each for a total powerhouse pumping capability of 28,000 cfs. Water flowing through the turbines is discharged via the draft tubes into the Susquehanna River adjacent to the powerhouse. The units are equipped with trash racks between the draft tube outlet and the river.

Electricity generated at the project is transmitted by two individual 220-kilovolt (kV) transmission lines extending from the project switching station approximately 4.25 miles to the Peach Bottom Atomic Power Station (PBAPS) North Substation located in York County.

The Muddy Run Project has an authorized nameplate generating capacity of 800 MW and generates an average of 1,610,611 megawatt hours annually. Exelon is not proposing any new or upgraded facilities or structural changes to the project at this time. Also, Exelon has engaged interested stakeholders to participate in the development of a comprehensive settlement agreement based on collaborative negotiation of specific terms and conditions for the new Muddy Run license.

m. A copy of the application is available for review at the Commission in the Public Reference Room or may be viewed on the Commission's Web site at *http://www.ferc.gov* using the ''eLibrary'' link. Enter the docket number excluding the last three digits in the docket number field to access the document. For assistance, contact FERC Online Support at *FERCOnlineSupport@ferc.gov* or toll-free at 1–866–208–3676, or for TTY, (202) 502–8659. A copy is also available for inspection and reproduction at the address in item (h) above.

Register online at *http://www.ferc.gov/docs-filing/esubscription.asp* to be notified via email of new filings and issuances related to this or other pending projects. For assistance, contact FERC Online Support.

n. Anyone may submit comments, a protest, or a motion to intervene in accordance with the requirements of Rules of Practice and Procedure, 18 CFR 385.210, .211, .214. In determining the appropriate action to take, the Commission will consider all protests or other comments filed, but only those who file a motion to intervene in accordance with the Commission's Rules may become a party to the proceeding. Any comments, protests, or motions to intervene must be received on or before the specified comment date for the particular application.

All filings must (1) bear in all capital letters the title ''PROTEST,'' ''MOTION TO INTERVENE,'' ''COMMENTS,'' ''REPLY COMMENTS,'' ''RECOMMENDATIONS,'' ''PRELIMINARY TERMS AND CONDITIONS,'' or ''PRELIMINARY FISHWAY PRESCRIPTIONS;'' (2) set forth in the heading the name of the applicant and the project number of the application to which the filing responds; (3) furnish the name, address, and telephone number of the person protesting or intervening; and (4) otherwise comply with the requirements of 18 CFR 385.2001 through 385.2005. All comments, recommendations, terms and conditions, or prescriptions must set forth their evidentiary basis and otherwise comply with the requirements of 18 CFR 4.34(b). Agencies may obtain copies of the application directly from the applicant. A copy of any protest or motion to intervene must be served upon each representative of the applicant specified in the particular application. A copy of all other filings in reference to this application must be accompanied by proof of service on all persons listed in the service list prepared by the Commission in this proceeding, in accordance with 18 CFR 4.34(b) and 385.2010.

You may also register online at *http://www.ferc.gov/docs-filing/esubscription.asp* to be notified via email of new filings and issuances related to this or other pending projects. For assistance, contact FERC Online Support.

o. *Procedural Schedule:*

The application will be processed according to the following Hydro Licensing Schedule. Revisions to the schedule may be made as appropriate.

Milestone	Target date
Filing of recommendations, preliminary terms and conditions, and preliminary fishway prescriptions.	September 30, 2013.
Reply comments due	November 14, 2013.
Commission issues draft EIS.	March 29, 2014.
Comments on draft EIS.	May 28, 2014.
Modified terms and conditions.	July 27, 2014.
Commission issues Final EIS.	October 25, 2014.

p. Final amendments to the application must be filed with the Commission no later than 30 days from the issuance date of the notice of ready for environmental analysis.

q. A license applicant must file no later than 60 days following the date of issuance of this notice of acceptance and ready for environmental analysis as provided for in 5.22: (1) A copy of the water quality certification; (2) a copy of the request for certification, including proof of the date on which the certifying agency received the request; or (3) evidence of waiver of water quality certification.

Dated: April 29, 2013.

Kimberly D. Rose,

Secretary.

[FR Doc. 2013–10617 Filed 5–3–13; 8:45 am]

BILLING CODE 6717–01–P

DEPARTMENT OF ENERGY

Federal Energy Regulatory Commission

[Docket No. CP13–166–000]

Texas Gas Transmission, LLC; Notice of Application

Take notice that on April 15, 2013, Texas Gas Transmission, LLC (Texas Gas), 9 Greenway Plaza, Suite 2800, Houston, Texas 77046, filed in Docket No. CP13–166–000 an application pursuant to section 7(b) of the Natural Gas Act (NGA) and the Commission's regulations, for authorization to abandon by sale approximately 1.9 miles of 4 inch pipeline, commonly known as the Lake Pagie South 4-inch pipeline in Terrebonne Parish, LA to Apache Corporation. Texas Gas also request authorization that the facilities, upon abandonment, will be non-jurisdictional under NGA Section 1(b), all as more fully set forth in the application which is on file with the Commission and open to the public for inspection. This filing may be also viewed on the web at *http://www.ferc.gov* using the ''eLibrary'' link. Enter the docket number excluding the last three digits in the docket number field to access the document. For assistance, please contact FERCOnline Support at *FERCOnlineSupport@ferc.gov* or toll free at (866) 208–3676, or TTY, contact (202) 502–8659.

Any questions concerning this application maybe directed to J. Kyle Stephens, Vice President, Rates and Regulatory Affairs, Texas Gas Transmission, LLC, 9 Greenway Plaza, Suite 2800, Houston, Texas 77046, or by calling (713) 479–8033 (telephone), facsimile to (713) 479–1846 (fax), or email to *Kyle.Stephens@bwpmlp.com.*

Pursuant to section 157.9 of the Commission's rules, 18 CFR 157.9, within 90 days of this Notice the Commission staff will either: complete its environmental assessment (EA) and place it into the Commission's public record (eLibrary) for this proceeding; or issue a Notice of Schedule for Environmental Review. If a Notice of Schedule for Environmental Review is issued, it will indicate, among other milestones, the anticipated date for the Commission staff's issuance of the final environmental impact statement (FEIS) or EA for this proposal. The filing of the EA in the Commission's public record for this proceeding or the issuance of a Notice of Schedule for Environmental Review will serve to notify federal and state agencies of the timing for the completion of all necessary reviews, and the subsequent need to complete all federal authorizations within 90 days of the date of issuance of the Commission staff's FEIS or EA.

There are two ways to become involved in the Commission's review of this project. First, any person wishing to obtain legal status by becoming a party to the proceedings for this project should, on or before the comment date stated below, file with the Federal Energy Regulatory Commission, 888 First Street NE., Washington, DC 20426, a motion to intervene in accordance with the requirements of the Commission's Rules of Practice and Procedure (18 CFR 385.214 or 385.211) and the Regulations under the NGA (18 CFR 157.10). A person obtaining party status will be placed on the service list maintained by the Secretary of the Commission and will receive copies of all documents filed by the applicant and by all other parties. A party must submit 7 copies of filings made with the Commission and must mail a copy to the applicant and to every other party in the proceeding. Only parties to the proceeding can ask for court review of Commission orders in the proceeding.

However, a person does not have to intervene in order to have comments considered. The second way to participate is by filing with the Secretary of the Commission, as soon as possible, an original and two copies of comments in support of or in opposition to this project. The Commission will consider these comments in determining the appropriate action to be taken, but the filing of a comment alone will not serve to make the filer a party to the proceeding. The Commission's rules require that persons filing comments in opposition to the project provide copies of their protests only to the party or parties directly involved in the protest.

Persons who wish to comment only on the environmental review of this project should submit an original and two copies of their comments to the Secretary of the Commission. Environmental commentors will be placed on the Commission's environmental mailing list, will receive copies of the environmental documents, and will be notified of meetings associated with the Commission's environmental review process. Environmental commentors will not be required to serve copies of filed documents on all other parties. However, the non-party commentors will not receive copies of all documents filed by other parties or issued by the Commission (except for the mailing of environmental documents issued by the Commission) and will not have the right to seek court review of the Commission's final order.

The Commission strongly encourages electronic filings of comments, protests and interventions in lieu of paper using the ''eFiling'' link at *http://www.ferc.gov.* Persons unable to file electronically should submit an original and 5 copies of the protest or intervention to the Federal Energy regulatory Commission, 888 First Street NE., Washington, DC 20426.

This filing is accessible on-line at *http://www.ferc.gov,* using the ''eLibrary'' link and is available for review in the Commission's Public Reference Room in Washington, DC. There is an ''eSubscription'' link on the Web site that enables subscribers to receive email notification when a document is added to a subscribed docket(s). For assistance with any FERC Online service, please email *FERCOnlineSupport@ferc.gov,* or call (866) 208–3676 (toll free). For TTY, call (202) 502–8659.

Comment Date: 5:00 p.m. Eastern Time on May 21, 2013.

Dated: April 30, 2013.

Kimberly D. Bose,

Secretary.

[FR Doc. 2013–10645 Filed 5–3–13; 8:45 am]

BILLING CODE 6717–01–P

DEPARTMENT OF ENERGY

Federal Energy Regulatory Commission

[Docket Nos. CP13–193–000; PF12–4–000]

Aguirre Offshore GasPort, LLC; Notice of Application

Take notice that on April 17, 2013, Aguirre Offshore GasPort, LLC (Aguirre), 1450 Lake Robbins Drive, Suite 200, The Woodlands, Texas 77380, filed in the above referenced docket an application pursuant section 3 of the Natural Gas Act (NGA), as amended, and Parts 153 and 380 of the Commission's regulations, requests authorization to construct and operate certain liquefied natural gas (LNG) import terminal facilities, including a 4.1-mile subsea interconnecting natural gas pipeline, to be located in Salinas, along the Commonwealth of Puerto Rico in Commonwealth waters, all as more fully set forth in the application which is on file with the Commission and open to public inspection. The filing may also be viewed on the web at *http://www.ferc.gov* using the ''eLibrary'' link. Enter the docket number excluding the last three digits in the docket number field to access the document. For assistance, please contact FERC Online Support at *FERCOnlineSupport@ferc.gov* or toll free at (866) 208–3676, or TTY, contact (202) 502–8659.

Any questions concerning this application may be directed to Mike Trammel, Senior Director—Government and Environmental Affairs, Excelerate Energy L.P., 1450 Lake Robbins, Suite 200, The Woodlands, Texas 77380, (832) 813–7629.

In addition to the LNG terminal, the Aguirre Offshore GasPort Project will include a non-jurisdictional Energy Bridge Regasification Vessel functioning as the floating storage and regasification unit for the Project. The project will provide up to 3.2 billion cubic feet of LNG storage capacity and a sustained deliverability of 500 million standard cubic feet per day (MMscf/d), with a peak deliverability of 600 MMscf/d of natural gas directly to the Aguirre Power Plant. Aguirre is developing this project in cooperation with the Puerto Rico Electric Power Authority (PREPA) to supply PREPA's Aguirre Power Plant with natural gas as an alternative fuel to produce electricity for Puerto Rico's businesses and consumers.

On January 11, 2012, the Commission staff granted Aguirre's request to use the pre-filing process and assigned Docket No. PF12–4–000 for this proceeding during the pre-filing review of the

project. Now, as of the filing of the application on April 17, 2013, the pre-filing process for this project has ended. From this time forward, Aguirre's proceeding will be conducted in Docket No. CP13–193–000, as noted in the caption of this Notice.

Pursuant to section 157.9 of the Commission's rules, 18 CFR 157.9, within 90 days of this Notice the Commission staff will either: Complete its environmental assessment (EA) and place it into the Commission's public record (eLibrary) for this proceeding; or issue a Notice of Schedule for Environmental Review. If a Notice of Schedule for Environmental Review is issued, it will indicate, among other milestones, the anticipated date for the Commission staff's issuance of the final environmental impact statement (FEIS) or EA for this proposal. The filing of the EA in the Commission's public record for this proceeding or the issuance of a Notice of Schedule for Environmental Review will serve to notify federal and state agencies of the timing for the completion of all necessary reviews, and the subsequent need to complete all federal authorizations within 90 days of the date of issuance of the Commission staff's FEIS or EA.

There are two ways to become involved in the Commission's review of this project. First, any person wishing to obtain legal status by becoming a party to the proceedings for this project should, on or before the comment date stated below, file with the Federal Energy Regulatory Commission, 888 First Street NE., Washington, DC 20426, a motion to intervene in accordance with the requirements of the Commission's Rules of Practice and Procedure (18 CFR 385.214 or 385.211) and the Regulations under the NGA (18 CFR 157.10). A person obtaining party status will be placed on the service list maintained by the Secretary of the Commission and will receive copies of all documents filed by the applicant and by all other parties. A party must submit seven copies of filings made with the Commission and must mail a copy to the applicant and to every other party in the proceeding. Only parties to the proceeding can ask for court review of Commission orders in the proceeding.

However, a person does not have to intervene in order to have comments considered. The second way to participate is by filing with the Secretary of the Commission, as soon as possible, an original and two copies of comments in support of or in opposition to this project. The Commission will consider these comments in determining the appropriate action to be taken, but the filing of a comment alone will not serve to make the filer a party to the proceeding. The Commission's rules require that persons filing comments in opposition to the project provide copies of their protests only to the party or parties directly involved in the protest.

Persons who wish to comment only on the environmental review of this project should submit an original and two copies of their comments to the Secretary of the Commission. Environmental commentors will be placed on the Commission's environmental mailing list, will receive copies of the environmental documents, and will be notified of meetings associated with the Commission's environmental review process. Environmental commentors will not be required to serve copies of filed documents on all other parties. However, the non-party commentors will not receive copies of all documents filed by other parties or issued by the Commission (except for the mailing of environmental documents issued by the Commission) and will not have the right to seek court review of the Commission's final order.

The Commission strongly encourages electronic filings of comments, protests and interventions in lieu of paper using the ''eFiling'' link at *http://www.ferc.gov.* Persons unable to file electronically should submit an original and five copies of the protest or intervention to the Federal Energy Regulatory Commission, 888 First Street, NE., Washington, DC 20426.

This filing is accessible on-line at *http://www.ferc.gov,* using the ''eLibrary'' link and is available for review in the Commission's Public Reference Room in Washington, DC. There is an ''eSubscription'' link on the Web site that enables subscribers to receive email notification when a document is added to a subscribed docket(s). For assistance with any FERC Online service, please email *FERCOnlineSupport@ferc.gov,* or call (866) 208–3676 (toll free). For TTY, call (202) 502–8659.

Comment Date: May 21, 2013.

Dated: April 30, 2013.

Kimberly D. Bose,

Secretary.

[FR Doc. 2013–10643 Filed 5–3–13; 8:45 am]

BILLING CODE 6717–01–P

DEPARTMENT OF ENERGY

Federal Energy Regulatory Commission

[Project No. 5147–014]

Small Hydro of Texas, Inc.; Notice of Application Accepted for Filing, Soliciting Comments, Motions To Intervene, and Protests

Take notice that the following hydroelectric application has been filed with the Commission and is available for public inspection:

a. *Type of Application:* Surrender of Exemption.

b. *Project No.:* 5147–014.

c. *Date Filed:* September 4, 2012.

d. *Applicant:* Small Hydro of Texas, Inc.

e. *Name of Project:* Cuero Hydroelectric Project.

f. *Location:* Guadalupe River, 2.5 miles northwest of the town of Cuero, in DeWitt County, Texas.

g. *Filed Pursuant to:* Federal Power Act, 16 U.S.C. 791a–825r.

h. *Applicant Contact:* Mr. James H. Hoffman, President, Small Hydro of Texas, Inc. P.O. Box 1667, Victoria, TX 77902 (361) 571–4626.

i. *FERC Contact:* Mr. Henry Woo, (202) 502–8872, *henry.woo@ferc.gov.*

j. Deadline for filing comments, motions to intervene, and protests, is 30 days from the issuance date of this notice by the Commission. All documents may be filed electronically via the Internet. See, 18 CFR 385.2001(a)(1)(iii) and the instructions on the Commission's Web site at *http://www.ferc.gov/docs-filing/efiling.asp.* If unable to be filed electronically, documents may be paper-filed. To paper-file, an original and seven copies should be mailed to: Secretary, Federal Energy Regulatory Commission, 888 First Street NE., Washington, DC 20426. Commenters can submit brief comments up to 6,000 characters, without prior registration, using the eComment system at *http://www.ferc.gov/docs-filing/ecomment.asp.* You must include your name and contact information at the end of your comments.

Please include the project number (P–5147–014) on any comments, motions, or recommendations filed.

k. *Description of Request:* The applicant proposes to surrender the exemption for the Cuero (P–5147) Hydroelectric Project. The applicant states that the exemption is being surrendered because the company has been unable to generate any sustained output since a 2004 breach of the right rim of the reservoir.

l. *Locations of the Application:* A copy of the application is available for inspection and reproduction at the Commission's Public Reference Room, located at 888 First Street NE., Room 2A, Washington, DC 20426, or by calling (202) 502–8371. This filing may also be viewed on the Commission's Web site at *http://www.ferc.gov/docs-filing/elibrary.asp.* Enter the docket number excluding the last three digits in the docket number field to access the document. You may also register online at *http://www.ferc.gov/docs-filing/esubscription.asp* to be notified via email of new filings and issuances related to this or other pending projects. For assistance, call 1–866–208–3676 or email *FERCOnlineSupport@ferc.gov,* for TTY, call (202) 502–8659. A copy is also available for inspection and reproduction at the address in item (h) above.

m. Individuals desiring to be included on the Commission's mailing list should so indicate by writing to the Secretary of the Commission.

n. *Comments, Protests, or Motions to Intervene:* Anyone may submit comments, a protest, or a motion to intervene in accordance with the requirements of Rules of Practice and Procedure, 18 CFR 385.210, .211, .214. In determining the appropriate action to take, the Commission will consider all protests or other comments filed, but only those who file a motion to intervene in accordance with the Commission's Rules may become a party to the proceeding. Any comments, protests, or motions to intervene must be received on or before the specified comment date for the particular application.

o. *Filing and Service of Responsive Documents:* Any filing must (1) bear in all capital letters the title ''COMMENTS'', ''PROTEST'', or ''MOTION TO INTERVENE'' as applicable; (2) set forth in the heading the name of the applicant and the project number of the application to which the filing responds; (3) furnish the name, address, and telephone number of the person protesting or intervening; and (4) otherwise comply with the requirements of 18 CFR 385.2001 through 385.2005. All comments, motions to intervene, or protests must set forth their evidentiary basis and otherwise comply with the requirements of 18 CFR 4.34(b). All comments, motions to intervene, or protests should relate to project works which are the subject of the exemption surrender. Agencies may obtain copies of the application directly from the applicant. A copy of any protest or motion to intervene must be served upon each representative of the applicant specified in the particular application. If an intervener files comments or documents with the Commission relating to the merits of an issue that may affect the responsibilities of a particular resource agency, they must also serve a copy of the document on that resource agency. A copy of all other filings in reference to this application must be accompanied by proof of service on all persons listed in the service list prepared by the Commission in this proceeding, in accordance with 18 CFR 4.34(b) and 385.2010.

Dated: April 26, 2013.

Kimberly D. Bose,

Secretary.

[FR Doc. 2013–10611 Filed 5–3–13; 8:45 am]

BILLING CODE 6717–01–P

DEPARTMENT OF ENERGY

Federal Energy Regulatory Commission

[Project No. 405–106]

Exelon Generation Company, LLC; Notice of Application Accepted for Filing, Soliciting Motions To Intervene and Protests, Ready for Environmental Analysis, Soliciting Comments, Recommendations, Preliminary Terms and Conditions, and Preliminary Fishway Prescriptions, and Intent To Prepare an Environmental Impact Statement

Take notice that the following hydroelectric application has been filed with the Commission and is available for public inspection.

a. *Type of Application:* New Major License

b. *Project No.:* 405–106

c. *Date Filed:* August 31, 2012

d. *Applicant:* Exelon Generation Company, LLC

e. *Name of Project:* Conowingo Hydroelectric Project

f. *Location:* On the Susquehanna River, in Harford and Cecil Counties, Maryland and Lancaster and York Counties, Pennsylvania. The project does not occupy any federal lands.

g. *Filed Pursuant to:* Federal Power Act, 16 U.S.C. 791(a)–825(r)

h. *Applicant Contact:* Colleen Hicks, Manager, Regulatory and Licensing, Hydro, Exelon Power, 300 Exelon Way, Kennett Square, PA 19348, at (610) 765–6791 or email at *Colleen.Hicks@exeloncorp.com* and Kathleen Barròn, Vice President, Federal Regulatory Affairs and Wholesale Market Policy, Exelon Corporation, 101 Constitution Avenue, Washington, DC 20001, at (202) 347–7500 or email at *Kathleen.Barron2@exeloncorp.com.*

i. *FERC Contact:* Emily Carter, (202) 502–6512 or *emily.carter@ferc.gov.*

j. Deadline for filing motions to intervene and protests, comments, recommendations, preliminary terms and conditions, and preliminary fishway prescriptions is September 30, 2013; reply comments are due November 14, 2013.

Motions to intervene, protests, comments, recommendations, preliminary terms and conditions, and preliminary fishway prescriptions may be filed electronically via the Internet. See 18 CFR 385.2001(a)(1)(iii) and the instructions on the Commission's Web site *http://www.ferc.gov/docs-filing/efiling.asp.* Commenters can submit brief comments up to 6,000 characters, without prior registration, using the eComment system at *http://www.ferc.gov/docs-filing/ecomment.asp.* You must include your name and contact information at the end of your comments. For assistance, please contact FERC Online Support. Although the Commission strongly encourages electronic filing, documents may also be paper-filed. To paper-file, mail an original and seven copies to: Kimberly D. Bose, Secretary, Federal Energy Regulatory Commission, 888 First Street NE., Washington, DC 20426.

The Commission's Rules of Practice require all intervenors filing documents with the Commission to serve a copy of that document on each person on the official service list for the project. Further, if an intervenor files comments or documents with the Commission relating to the merits of an issue that may affect the responsibilities of a particular resource agency, they must also serve a copy of the document on that resource agency.

k. This application has been accepted and is ready for environmental analysis at this time.

l. The existing Conowingo Project consists of a concrete gravity dam with a maximum height of approximately 94 feet. The dam consists of a 1,225-foot-long, non-overflow gravity section, a 2,385-foot-long ogee-shaped spillway section, a 950-foot-long intake-powerhouse section, and a 100-foot-long non-overflow gravity section. The spillway consists of a 2,250-foot-long section with a crest elevation of 86.0 feet, and a 135-foot-long section with a crest elevation of 98.5 feet.[1] The

[1] All elevations are referenced to National Geodetic Vertical Datum (NGVD) 1929.

spillway is fitted with 50 Stoney-type crest gates and two regulating gates. Each Stoney crest gate is 22.5 feet high by 38 feet wide and has a discharge capacity of 16,000 cubic feet per second (cfs) at a reservoir elevation of 109.2 feet. The two regulating gates are 10 feet high by 38 feet wide and have a discharge capacity of 4,000 cfs per gate at a reservoir elevation of 109.2 feet.

Conowingo dam impounds the Susquehanna River, forming Conowingo reservoir (Conowingo pond) that extends 14 miles upstream from the dam. Total storage in the 9,000-acre reservoir is approximately 310,000 acre-feet, and total useable storage is about 71,000 acre-feet at the normal full pool elevation of 109.2 feet. The elevation of the normal river surface below the dam is approximately 20.5 feet. The impoundment provides approximately 89 feet of gross head for power generation purposes.

The power plant is integral with the dam and is composed of 13 turbine-generator units, draft tubes, and transformer bays. The first seven turbine-generating units (1–7) are completely enclosed within the powerhouse, and the last four units (8–11) are located outside. The hydraulic equipment for units 1–7 consists of Francis-type single runner hydraulic turbines. The hydraulic equipment for units 8–11 consists of four mixed-flow Kaplan-type hydraulic turbines. Units 1, 3, 4, 6 and 7 have 47.7-megawatt (MW) generators; Units 2 and 5 have 36.0-MW generators; and Units 8–11 have 65.6-MW generators. Additionally, two house turbines provide station service and ''black-start'' capability with each unit having a 1.6-MW generator. Water flowing through the turbines is discharged via the draft tubes into the tailrace immediately downstream of the dam.

Electricity generated at the project is transmitted by two individual 220-kilovolt (kV) transmission lines extending from the project substation to East Nottingham.

The Conowingo Project has an authorized nameplate generating capacity of 573 MW and generates an average of 1,836,125 megawatt hours annually. Exelon is not proposing any new or upgraded facilities or structural changes to the project at this time. Exelon is proposing to modify the project boundary in the vicinity of upper Broad Creek and downstream of the Conowingo dam. This modification will remove lands from upper Broad Creek, as well as downstream of Rowland Island. Originally included in the construction plans of the project, Exelon states these lands are no longer necessary for project operation. In addition, Exelon has engaged interested stakeholders to participate in the development of a comprehensive settlement agreement based on collaborative negotiation of specific terms and conditions for the new Conowingo license.

m. A copy of the application is available for review at the Commission in the Public Reference Room or may be viewed on the Commission's Web site at *http://www.ferc.gov* using the ''eLibrary'' link. Enter the docket number excluding the last three digits in the docket number field to access the document. For assistance, contact FERC Online Support at *FERCOnlineSupport@ferc.gov* or toll-free at 1–866–208–3676, or for TTY, (202) 502–8659. A copy is also available for inspection and reproduction at the address in item (h) above.

Register online at *http://www.ferc.gov/docs-filing/esubscription.asp* to be notified via email of new filings and issuances related to this or other pending projects. For assistance, contact FERC Online Support.

n. Anyone may submit comments, a protest, or a motion to intervene in accordance with the requirements of Rules of Practice and Procedure, 18 CFR 385.210, .211, .214. In determining the appropriate action to take, the Commission will consider all protests or other comments filed, but only those who file a motion to intervene in accordance with the Commission's Rules may become a party to the proceeding. Any comments, protests, or motions to intervene must be received on or before the specified comment date for the particular application.

All filings must (1) bear in all capital letters the title ''PROTEST,'' ''MOTION TO INTERVENE,'' ''COMMENTS,'' ''REPLY COMMENTS,'' ''RECOMMENDATIONS,'' ''PRELIMINARY TERMS AND CONDITIONS,'' or ''PRELIMINARY FISHWAY PRESCRIPTIONS;'' (2) set forth in the heading the name of the applicant and the project number of the application to which the filing responds; (3) furnish the name, address, and telephone number of the person protesting or intervening; and (4) otherwise comply with the requirements of 18 CFR 385.2001 through 385.2005. All comments, recommendations, terms and conditions, or prescriptions must set forth their evidentiary basis and otherwise comply with the requirements of 18 CFR 4.34(b). Agencies may obtain copies of the application directly from the applicant. A copy of any protest or motion to intervene must be served upon each representative of the applicant specified in the particular application. A copy of all other filings in reference to this application must be accompanied by proof of service on all persons listed in the service list prepared by the Commission in this proceeding, in accordance with 18 CFR 4.34(b) and 385.2010.

You may also register online at *http://www.ferc.gov/docs-filing/esubscription.asp* to be notified via email of new filings and issuances related to this or other pending projects. For assistance, contact FERC Online Support.

o. *Procedural Schedule:* The application will be processed according to the following Hydro Licensing Schedule. Revisions to the schedule may be made as appropriate.

Milestone	Target date
Filing of recommendations, preliminary terms and conditions, and preliminary fishway prescriptions	September 30, 2013.
Reply comments due	November 14, 2013.
Commission issues draft EIS	March 29, 2014.
Comments on draft EIS	May 28, 2014.
Modified terms and conditions	July 27, 2014.
Commission issues Final EIS	October 25, 2014.

p. Final amendments to the application must be filed with the Commission no later than 30 days from the issuance date of the notice of ready for environmental analysis.

q. A license applicant must file no later than 60 days following the date of issuance of this notice of acceptance and ready for environmental analysis provided for in 5.22: (1) A copy of the water quality certification; (2) a copy of

the request for certification, including proof of the date on which the certifying agency received the request; or (3) evidence of waiver of water quality certification.

Dated: April 29, 2013.

Kimberly D Bose,

Secretary.

[FR Doc. 2013–10619 Filed 5–3–13; 8:45 am]

BILLING CODE 6717–01–P

DEPARTMENT OF ENERGY

Federal Energy Regulatory Commission

[Project No. 12187–017]

Brookfield Renewable Power, Inc.; Notice of Application Accepted for Filing, Soliciting Comments, Motions To Intervene, and Protests

Take notice that the following hydroelectric application has been filed with the Commission and is available for public inspection:

a. *Types of Application:* Surrender of License.

b. *Project No.:* 12187–017.

c. *Date Filed:* February 22, 2013.

d. *Applicants:* Brookfield Renewable Power, Inc.

e. *Name of Project:* Price Dam Hydroelectric Project.

f. *Location:* U.S. Army Corps of Engineers' Melvin Price Locks & Dam on the Mississippi River, in the City of Alton, Madison County, Illinois.

g. *Filed Pursuant to:* Federal Power Act, 16 U.S.C. 791a–825r.

h. *Applicant Contact:* Mr. Jeffrey Auser, Project Manager, Brookfield Renewable Energy Group, 200 Donald Lynch Blvd., Suite 300, Marlborough, MA 01752, (508) 251–7716 and Mr. Mel R. Jiganti, Director, Legal Services, Brookfield Renewable Energy Group, 200 Donald Lynch Blvd., Suite 300, Marlborough, MA 01752, (508) 251–7705.

i. *FERC Contact:* Mr. Ashish Desai, (202) 502–8370, *Ashish.Desai@ferc.gov.*

j. Deadline for filing comments, motions to intervene, and protests, is 30 days from the issuance date of this notice by the Commission. All documents may be filed electronically via the Internet. See, 18 CFR 385.2001(a)(1)(iii) and the instructions on the Commission's Web site at *http://www.ferc.gov/docs-filing/efiling.asp.* If unable to be filed electronically, documents may be paper-filed. To paper-file, an original and seven copies should be mailed to: Secretary, Federal Energy Regulatory Commission, 888 First Street NE., Washington, DC 20426. Commenters can submit brief comments up to 6,000 characters, without prior registration, using the eComment system at *http://www.ferc.gov/docs-filing/ecomment.asp.* You must include your name and contact information at the end of your comments.

Please include the project number (P–12187–017) on any comments, motions, or recommendations filed.

k. *Description of Request: T*he licensee filed an application to surrender its license for the unconstructed Price Dam Hydroelectric Project. The licensee has not commenced construction of the project. No ground disturbing activities have occurred.

l. *Locations of the Application:* A copy of the application is available for inspection and reproduction at the Commission's Public Reference Room, located at 888 First Street NE., Room 2A, Washington, DC 20426, or by calling (202) 502–8371. This filing may also be viewed on the Commission's Web site at *http://www.ferc.gov/docs-filing/elibrary.asp.* Enter the docket number excluding the last three digits in the docket number field to access the document. You may also register online at *http://www.ferc.gov/docs-filing/esubscription.asp* to be notified via email of new filings and issuances related to this or other pending projects. For assistance, call 1–866–208–3676 or email *FERCOnlineSupport@ferc.gov,* for TTY, call (202) 502–8659. A copy is also available for inspection and reproduction at the address in item (h) above.

m. Individuals desiring to be included on the Commission's mailing list should so indicate by writing to the Secretary of the Commission.

n. *Comments, Protests, or Motions to Intervene:* Anyone may submit comments, a protest, or a motion to intervene in accordance with the requirements of Rules of Practice and Procedure, 18 CFR 385.210, .211, .214. In determining the appropriate action to take, the Commission will consider all protests or other comments filed, but only those who file a motion to intervene in accordance with the Commission's Rules may become a party to the proceeding. Any comments, protests, or motions to intervene must be received on or before the specified comment date for the particular application.

o. *Filing and Service of Responsive Documents:* Any filing must (1) bear in all capital letters the title ''COMMENTS'', ''PROTEST'', or ''MOTION TO INTERVENE'' as applicable; (2) set forth in the heading the name of the applicant and the project number of the application to which the filing responds; (3) furnish the name, address, and telephone number of the person protesting or intervening; and (4) otherwise comply with the requirements of 18 CFR 385.2001 through 385.2005. All comments, motions to intervene, or protests must set forth their evidentiary basis and otherwise comply with the requirements of 18 CFR 4.34(b). All comments, motions to intervene, or protests should relate to project works which are the subject of the license surrender. Agencies may obtain copies of the application directly from the applicant. A copy of any protest or motion to intervene must be served upon each representative of the applicant specified in the particular application. If an intervener files comments or documents with the Commission relating to the merits of an issue that may affect the responsibilities of a particular resource agency, they must also serve a copy of the document on that resource agency. A copy of all other filings in reference to this application must be accompanied by proof of service on all persons listed in the service list prepared by the Commission in this proceeding, in accordance with 18 CFR 4.34(b) and 385.2010.

Dated: April 26, 2013.

Kimberly D. Bose,

Secretary.

[FR Doc. 2013–10624 Filed 5–3–13; 8:45 am]

BILLING CODE 6717–01–P

DEPARTMENT OF ENERGY

Federal Energy Regulatory Commission

[Project No. 1888–030]

York Haven Power Company, LLC; Notice of Application Accepted for Filing, Soliciting Motions To Intervene and Protests, Ready for Environmental Analysis, and Soliciting Comments, Recommendations, Preliminary Terms and Conditions, and Preliminary Fishway Prescriptions

Take notice that the following hydroelectric application has been filed with the Commission and is available for public inspection.

a. *Type of Application:* New Major License.

b. *Project No.:* 1888–030.

c. *Date Filed:* August 30, 2012.

d. *Applicant:* York Haven Power Company, LLC.

e. *Name of Project:* York Haven Hydroelectric Project.

f. *Location:* On the Susquehanna River, in Dauphin, Lancaster, and York Counties, Pennsylvania. The project does not occupy any federal lands.

g. *Filed Pursuant to:* Federal Power Act, 16 U.S.C. 791 (a)–825(r).

h. *Applicant Contact:* David R. David, York Haven Power Company, York Haven Hydro Station, P.O. Box 67, York Haven, PA 17370, at (717) 266–9475 or email at *DDavid@yorkhavenpower.com* and Dennis T. O'Donnell, Olympus Power, LLC, 67 Park Place East, Morristown, NJ 07960.

i. *FERC Contact:* Emily Carter, (202) 502–6512 or *emily.carter@ferc.gov*

j. Deadline for filing motions to intervene and protests, comments, recommendations, preliminary terms and conditions, and preliminary fishway prescriptions is 60 days from the issuance of this notice; reply comments are due 105 days from the issuance date of this notice.

Motions to intervene, protests, comments, recommendations, preliminary terms and conditions, and preliminary fishway prescriptions may be filed electronically via the Internet. See 18 CFR 385.2001(a)(1)(iii) and the instructions on the Commission's Web site *http://www.ferc.gov/docs-filing/efiling.asp.* Commenters can submit brief comments up to 6,000 characters, without prior registration, using the eComment system at *http://www.ferc.gov/docs-filing/ecomment.asp.* You must include your name and contact information at the end of your comments. For assistance, please contact FERC Online Support. Although the Commission strongly encourages electronic filing, documents may also be paper-filed. To paper-file, mail an original and seven copies to: Kimberly D. Bose, Secretary, Federal Energy Regulatory Commission, 888 First Street NE., Washington, DC 20426.

The Commission's Rules of Practice require all intervenors filing documents with the Commission to serve a copy of that document on each person on the official service list for the project. Further, if an intervenor files comments or documents with the Commission relating to the merits of an issue that may affect the responsibilities of a particular resource agency, they must also serve a copy of the document on that resource agency.

k. This application has been accepted for filing and is now ready for environmental analysis.

l. The existing York Haven Project consists of a headrace wall, main dam, east channel dam, powerhouse, and forebay bulkhead. The stone masonry headrace wall extends 3,000 feet upstream from the north end of the powerhouse and, with an average height of 20 feet, directs flow to the powerhouse. The main dam is attached to the north end of the headrace where it runs diagonally across the main channel of the river approximately 4,970 feet to the west shore of Three Mile Island. The main dam is constructed of concrete fill, and has a maximum height at the crest of 17 feet and an average height of 10 feet. The east channel dam consists of a concrete gravity dam that extends approximately 950 feet east from the east shore of Three Mile Island to the east bank of the river. The east channel dam has an average height of 10 feet. The stone masonry forebay bulkhead wall, 155 feet long, extends west from the south end of the powerhouse to the transformer building, perpendicular to the shoreline. From the transformer building, the forebay bulkhead wall extends 475 feet north along the property line to the west bank of the river. A 14-foot-wide by 10.5-foot-tall trash sluice gate and associated spillway are located adjacent to the southern end of the powerhouse at the eastern end of the forebay wall.

York Haven's main dam and east channel dam impound the Susquehanna River, forming Lake Frederic that extends 3.5 miles upstream from the dam. Total storage in the 1,849-acre reservoir is approximately 8,000 acre-feet, and total useable storage is approximately 1,980 acre-feet. The current FERC license allows a 1.1-foot fluctuation in the project impoundment, but is not used under normal run-of-river operation. The normal water surface elevation of the project impoundment is 276.5 feet.[1] The elevation of the normal river surface below the dam is approximately 251.4 feet. The impoundment provides approximately 22.5 feet of net head for power generation purposes.

The brick and stone masonry powerhouse has approximate dimensions of 470 feet by 48 feet and is located at the southern end of the headrace wall and at the eastern end of the forebay bulkhead wall. The powerhouse includes 20 turbine-generator units and appurtenant equipment. The hydraulic equipment for units 1–3 are vertical-shaft, fixed-blade, Kaplan turbines; unit 4 is a vertical-shaft, manually adjustable blade, Kaplan turbine; units 5 and 6 are vertical-shaft, fixed-blade, propeller-type turbines; units 7, 8, 10–13, and 15–20 each consist of two vertical-shaft, Francis turbines connected through bevel gears to a single horizontal shaft; unit 9 is a two vertical-shaft, Francis turbine connected through a gearbox to a single horizontal shaft; and unit 14 is a vertical-shaft, Francis turbine. Units 1–5 have 1.6-megawatt (MW) generators; unit 6 has a 1.32-MW generator; unit 14 has a 1.2-MW generator; and units 7–13 and 15–20 have 0.7-MW generators. Water flowing through the turbines is discharged into the tailrace immediately downstream of the dam.

There are no primary transmission lines included as part of the project. The York Haven Project interconnects with the 115-kilovolt (kV) grid at the substation located immediately downstream of the project's forebay wall. A secondary service feed comes into the project substation via Line No. 722 at 13.2 kV.

The York Haven Project has an authorized nameplate generating capacity of 19.65 MW and generates an average of 130,812 megawatt hours annually. York Haven Power is currently studying the feasibility of providing a nature-like fishway to enhance fish passage facilities at the project. No other new developments or changes in operation are being proposed at this time.

m. A copy of the application is available for review at the Commission in the Public Reference Room or may be viewed on the Commission's Web site at *http://www.ferc.gov* using the ''eLibrary'' link. Enter the docket number excluding the last three digits in the docket number field to access the document. For assistance, contact FERC Online Support at *FERCOnlineSupport@ferc.gov* or toll-free at 1–866–208–3676, or for TTY, (202) 502–8659. A copy is also available for inspection and reproduction at the address in item (h) above.

Register online at *http://www.ferc.gov/docs-filing/esubscription.asp* to be notified via email of new filings and issuances related to this or other pending projects. For assistance, contact FERC Online Support.

n. Anyone may submit comments, a protest, or a motion to intervene in accordance with the requirements of Rules of Practice and Procedure, 18 CFR 385.210, .211, .214. In determining the appropriate action to take, the Commission will consider all protests or other comments filed, but only those who file a motion to intervene in accordance with the Commission's Rules may become a party to the proceeding. Any comments, protests, or motions to intervene must be received on or before the specified comment date for the particular application.

[1] All elevations are referenced to National Geodetic Vertical Datum (NGVD) 1929.

All filings must (1) bear in all capital letters the title ''PROTEST,'' ''MOTION TO INTERVENE,'' ''COMMENTS,'' ''REPLY COMMENTS,'' ''RECOMMENDATIONS,'' ''PRELIMINARY TERMS AND CONDITIONS,'' or ''PRELIMINARY FISHWAY PRESCRIPTIONS;'' (2) set forth in the heading the name of the applicant and the project number of the application to which the filing responds; (3) furnish the name, address, and telephone number of the person protesting or intervening; and (4) otherwise comply with the requirements of 18 CFR 385.2001 through 385.2005. All comments, recommendations, terms and conditions, or prescriptions must set forth their evidentiary basis and otherwise comply with the requirements of 18 CFR 4.34(b). Agencies may obtain copies of the application directly from the applicant. A copy of any protest or motion to intervene must be served upon each representative of the applicant specified in the particular application. A copy of all other filings in reference to this application must be accompanied by proof of service on all persons listed in the service list prepared by the Commission in this proceeding, in accordance with 18 CFR 4.34(b) and 385.2010.

o. *Procedural Schedule:*

The application will be processed according to the following Hydro Licensing Schedule. Revisions to the schedule may be made as appropriate.

Milestone	Target Date
Filing of recommendations, preliminary terms and conditions, and preliminary fishway prescriptions.	June 28, 2013.
Reply comments due	August 12, 2013.
Commission issues draft EA.	December 26, 2013.
Comments on draft EA.	January 24, 2014.
Modified terms and conditions.	March 25, 2014.
Commission issues final EA.	June 23, 2014.

p. Final amendments to the application must be filed with the Commission no later than 30 days from the issuance date of the notice of ready for environmental analysis.

q. A license applicant must file no later than 60 days following the date of issuance of this notice of acceptance and ready for environmental analysis provided for in 5.22: (1) a copy of the water quality certification; (2) a copy of the request for certification, including proof of the date on which the certifying agency received the request; or (3) evidence of waiver of water quality certification.

Dated: April 29, 2013.

Kimberly D. Bose,

Secretary.

[FR Doc. 2013–10620 Filed 5–3–13; 8:45 am]

BILLING CODE 6717–01–P

DEPARTMENT OF ENERGY

Federal Energy Regulatory Commission

[Docket No. DI13–4–000]

Southern Energy, Inc.; Notice of Declaration of Intention and Soliciting Comments, Protests, and/or Motions To Intervene

Take notice that the following application has been filed with the Commission and is available for public inspection:

a. *Application Type:* Declaration of Intention

b. *Docket No:* DI13–4–000

c. *Date Filed:* March 1, 2013

d. *Applicant:* Southern Energy, Inc.

e. *Name of Project:* Walker Lake Hydroelectric Project

f. *Location:* The proposed Walker Lake Hydroelectric Project will be located on Walker Lake near the City of Haines, in Haines Borough, Alaska.

g. *Filed Pursuant to:* Section 23(b)(1) of the Federal Power Act, 16 U.S.C. 817(b).

h. *Applicant Contact:* Darrell Maple, President, Lynn Canal Professional Services, 660 S. Oregon Street, Jacksonville, OR 97530 telephone: (541) 702–2190; email: *sdkmaple@mind.net*

i. *FERC Contact:* Any questions on this notice should be addressed to Ashish Desai, (202) 502–8370, or Email address: *Ashish.Desai@ferc.gov*

j. *Deadline for filing comments, protests, and/or motions is:* 30 days from the issuance of this notice by the Commission.

Comments, Motions to Intervene, and Protests may be filed electronically via the Internet. See 18 CFR 385.2001(a)(l)(iii) and the instructions on the Commission's Web site under the ''eFiling'' link. If unable to be filed electronically, documents may be paper-filed. To paper-file, an original and eight copies should be mailed to: Kimberly D. Bose, Secretary, Federal Energy Regulatory Commission, 888 First Street NE., Washington, DC 20426. For more information on how to submit these types of filings, please go to the Commission's Web site located at *http://www.ferc.gov/filing-comments.asp*.

Please include the docket number (DI13–4–000) on any comments, protests, and/or motions filed.

k. *Description of Project:* The proposed Walker Lake Hydroelectric Project would consist of: (1) Two rockfilled 15-foot-wide dams, making usable capacity of Walker Lake to be 4,300 acre-feet at a nomal maximum operating elevation of 1,195 feet mean sea level; (2) a concrete spillway and diversion channel for controlled releases to Walker Creek; (3) a freestanding concrete intake and reservoir outlet works at elevation 1,170 feet mean sea level diverting flow from the southeast dam into the penstock; (4) a 24-inch-diameter, 12,000-foot-long penstock, of which approximately 10,000 feet will be buried and 2,000 feet will be aboveground; (5) a powerhouse containing one generating unit rated at 1 megawatt at 780 feet of net head; (6) a 50-foot-long tailrace connecting the powerhouse with the Little Salmon River; (7) an underground, 4-mile-long, 12.5 kilovolt (kV) transmission line extending from the project to a point of interconnection with Inside Passage Electric Cooperative's power grid; and (4) appurtenant facilities.

When a Declaration of Intention is filed with the Federal Energy Regulatory Commission, the Federal Power Act requires the Commission to investigate and determine if the interests of interstate or foreign commerce would be affected by the project. The Commission also determines whether or not the project: (1) Would be located on a navigable waterway; (2) would occupy or affect public lands or reservations of the United States; (3) would utilize surplus water or water power from a government dam; or (4) if applicable, has involved or would involve any construction subsequent to 1935 that may have increased or would increase the project's head or generating capacity, or have otherwise significantly modified the project's pre-1935 design or operation.

l. *Locations of the Application:* Copies of this filing are on file with the Commission and are available for public inspection. This filing may be viewed on the web at *http://www.ferc.gov* using the ''eLibrary'' link. Enter the Docket number excluding the last three digits in the docket number field to access the document. You may also register online at *http://www.ferc.gov/docs-filing/esubscription.asp* to be notified via email of new filings and issuances related to this or other pending projects. For assistance, call 1–866–208–3676 or email *FERCOlineSupport@ferc.gov* for TTY, call (202) 502–8659. A copy is also available for inspection and

reproduction at the address in item (h) above.

m. Individuals desiring to be included on the Commission's mailing list should so indicate by writing to the Secretary of the Commission.

n. *Comments, Protests, or Motions to Intervene*—Anyone may submit comments, a protest, or a motion to intervene in accordance with the requirements of Rules of Practice and Procedure, 18 CFR 385.210, .211, .214. In determining the appropriate action to take, the Commission will consider all protests or other comments filed, but only those who file a motion to intervene in accordance with the Commission's Rules may become a party to the proceeding. Any comments, protests, or motions to intervene must be received on or before the specified comment date for the particular application.

o. *Filing and Service of Responsive Documents*—All filings must bear in all capital letters the title ''COMMENTS'', ''PROTESTS'', AND/OR ''MOTIONS TO INTERVENE'', as applicable, and the Docket Number of the particular application to which the filing refers. A copy of any Motion to Intervene must also be served upon each representative of the Applicant specified in the particular application.

p. *Agency Comments*—Federal, state, and local agencies are invited to file comments on the described application. A copy of the application may be obtained by agencies directly from the Applicant. If an agency does not file comments within the time specified for filing comments, it will be presumed to have no comments. One copy of an agency's comments must also be sent to the Applicant's representatives.

Dated: April 26, 2013.

Kimberly D. Bose,

Secretary.

[FR Doc. 2013–10614 Filed 5–3–13; 8:45 am]

BILLING CODE 6717–01–P

DEPARTMENT OF ENERGY

Federal Energy Regulatory Commission

Combined Notice of Filings #1

Take notice that the Commission received the following electric corporate filings:

Docket Numbers: EC13–98–000.

Applicants: SWG Colorado, LLC, SWG Arapahoe, LLC.

Description: Application under Section 203 of the Federal Power Act of SWG Colorado, LLC, et al.

Filed Date: 4/26/13.

Accession Number: 20130426–5259.

Comments Due: 5 p.m. e.t. 5/17/13.

Docket Numbers: EC13–99–000.

Applicants: Wabash Valley Power Association, Inc.

Description: Joint Application of Wabash Valley Power Association, Inc. for Authorization under Section 203 of the Federal Power Act.

Filed Date: 4/29/13.

Accession Number: 20130429–5051.

Comments Due: 5 p.m. e.t. 5/20/13.

Take notice that the Commission received the following electric rate filings:

Docket Numbers: ER10–2179–018; ER10–2181–018; ER10–2182–018.

Applicants: R.E. Ginna Nuclear Power Plant, LLC, Nine Mile Point Nuclear Station, LLC, Calvert Cliffs Nuclear Power Plant, LLC.

Description: Notice of Change in Status of Calvert Cliffs Nuclear Power Plant, LLC, et al.

Filed Date: 4/26/13.

Accession Number: 20130426–5252.

Comments Due: 5 p.m. e.t. 5/17/13.

Docket Numbers: ER12–281–003.

Applicants: Northampton Generating Company, L.P.

Description: Notice of Non-Material Change in Status of Northampton Generating Company, L.P.

Filed Date: 4/29/13.

Accession Number: 20130429–5213.

Comments Due: 5 p.m. e.t. 5/20/13.

Docket Numbers: ER12–2068–003; ER10–2460–005; ER10–2461–005; ER12–682–006; ER10–2463–005; ER11–2201–009; ER12–1311–005; ER10–2466–006; ER11–4029–005; ER13–17–003.

Applicants: Blue Sky East, LLC, Canandaigua Power Partners I, LLC, Canandaigua Power Partners II, LLC, Erie Wind, LLC, Evergreen Wind Power, LLC, Evergreen Wind Power III, LLC, Niagara Wind Power, LLC, Stetson Holdings, LLC, Stetson Wind II, LLC, Vermont Wind, LLC.

Description: Notice of Change in Status of Blue Sky East, LLC, et al.

Filed Date: 4/29/13.

Accession Number: 20130429–5085.

Comments Due: 5 p.m. e.t. 5/20/13.

Docket Numbers: ER12–2178–006; ER10–2172–017; ER12–2311–006; ER11–2016–012; ER10–2184–017; ER10–2183–014; ER10–1048–014 ER10–2176–018; ER10–2192–017; ER11–2056–011; ER10–2178–017; ER10–2174–017; ER11–2014–014; ER11–2013–014 ER10–3308–016; ER10–1020–013; ER10–1145–013; ER10–1144–012; ER10–1078–013; ER10–1080–013; ER11–2010–014 ER10–1081–013; ER10–2180–017; ER11–2011–013; ER12–2201–006; ER12–2528–005; ER11–2009–013; ER11–3989–011 ER10–1143–013; ER11–2780–012; ER12–1829–006; ER11–2007–012; ER12–1223–011; ER11–2005–014.

Applicants: AV Solar Ranch 1, LLC, Baltimore Gas and Electric Company, Beebe Renewable Energy, LLC, Cassia Gulch Wind Park, LLC, CER Generation II, LLC, CER Generation, LLC, Commonwealth Edison Company, Constellation Energy Commodities Group, Inc., Constellation Energy Commodities Group Maine, LLC, Constellation Mystic Power, LLC, Constellation NewEnergy, Inc., Constellation Power Source Generation Inc., Cow Branch Wind Power, L.L.C.,CR Clearing, LLC, Criterion Power Partners, LLC, Exelon Framingham, LLC,cExelon Generation Company, LLC, Exelon New Boston, LLC, Exelon West Medway, LLC, Exelon Wind 4, LLC, Exelon Wyman, LLC, Handsome Lake Energy, LLC, Harvest Windfarm, LLC, Harvest II Windfarm, LLC, High Mesa Energy, LLC, Michigan Wind 1, LLC, Michigan Wind 2, LLC, PECO Energy Company, Safe Harbor Water Power Corporation, Shooting Star Wind Project, LLC, Tuana Springs Energy, LLC, Wildcat Wind, LLC, Wind Capital Holdings, LLC.

Description: Notice of Change in Status of AV Solar Ranch 1, LLC, et al.

Filed Date: 4/26/13.

Accession Number: 20130426–5265.

Comments Due: 5 p.m. e.t. 5/17/13.

Docket Numbers: ER13–665–001.

Applicants: Midcontinent Independent System Operator, Inc.

Description: 2013–04–29 LTTR ARR Compliance Filing to be effective 3/29/2013.

Filed Date: 4/29/13.

Accession Number: 20130429–5114.

Comments Due: 5 p.m. e.t. 5/20/13.

Docket Numbers: ER13–834–001.

Applicants: Southwest Power Pool, Inc.

Description: Registration Freeze Compliance to be effective 4/1/2013.

Filed Date: 4/26/13.

Accession Number: 20130426–5234.

Comments Due: 5 p.m. e.t. 5/17/13.

Docket Numbers: ER13–1352–000.

Applicants: Massachusetts Electric Company.

Description: Interconnection Agreement Between Massachusetts Electric Co. and Ameresco to be effective 6/26/2013.

Filed Date: 4/26/13.

Accession Number: 20130426–5231.

Comments Due: 5 p.m. e.t. 5/17/13.

Docket Numbers: ER13–1353–000.

Applicants: PJM Interconnection, L.L.C.

Description: Revisions to the OATT & OA re Demand Response M&V Procedure Revisions to be effective 6/25/2013.

Filed Date: 4/26/13.
Accession Number: 20130426–5232.
Comments Due: 5 p.m. e.t. 5/17/13.

Docket Numbers: ER13–1354–000.
Applicants: Massachusetts Electric Company.
Description: Interconnection Agreement Between Mass. Electric Co. and Casella Waste Systems to be effective 6/26/2013.
Filed Date: 4/26/13.
Accession Number: 20130426–5235.
Comments Due: 5 p.m. e.t. 5/17/13.

Docket Numbers: ER13–1355–000.
Applicants: PacifiCorp.
Description: Termination of PacifiCorp Rate Schedule No. 611, the Northern Tier Transmission Group Second Amended and Restated 2007 Funding Agreement.
Filed Date: 4/26/13.
Accession Number: 20130426–5245.
Comments Due: 5 p.m. e.t. 5/17/13.

Docket Numbers: ER13–1356–000.
Applicants: Duke Energy Florida, Inc.
Description: Annual update of cost factors for Florida Power Corp. Interchange Agreements to be effective 5/1/2013.
Filed Date: 4/29/13.
Accession Number: 20130429–5028.
Comments Due: 5 p.m. e.t. 5/20/13.

Docket Numbers: ER13–1357–000.
Applicants: Duke Energy Progress, Inc.
Description: Notice of Succession to be effective 4/29/2013.
Filed Date: 4/29/13.
Accession Number: 20130429–5128.
Comments Due: 5 p.m. e.t. 5/20/13.

Docket Numbers: ER13–1358–000.
Applicants: Duke Energy Florida, Inc.
Description: Notice of Succession to be effective 4/29/2013.
Filed Date: 4/29/13.
Accession Number: 20130429–5139.
Comments Due: 5 p.m. e.t. 5/20/13.

Take notice that the Commission received the following electric securities filings:

Docket Numbers: ES13–22–000.
Applicants: MDU Resources Group, Inc.
Description: Application for MDU Resources Group, Inc. for authority to issues shares of common stock.
Filed Date: 4/29/13.
Accession Number: 20130429–5211.
Comments Due: 5 p.m. e.t. 5/20/13.

Take notice that the Commission received the following electric reliability filings.

Docket Numbers: RD13–9–000.
Applicants: North American Electric Reliability Corporation.
Description: Joint Petition of North American Electric Reliability Corporation and Southwest Power Pool Regional Entity for Approval of Proposed Regional Reliability Standard PRC–006–SPP–01—Underfrequency Load Shedding.
Filed Date: 4/26/13.
Accession Number: 20130426–5268.
Comments Due: 5 p.m. e.t. 5/20/13.

The filings are accessible in the Commission's eLibrary system by clicking on the links or querying the docket number.

Any person desiring to intervene or protest in any of the above proceedings must file in accordance with Rules 211 and 214 of the Commission's Regulations (18 CFR 385.211 and 385.214) on or before 5:00 p.m. Eastern time on the specified comment date. Protests may be considered, but intervention is necessary to become a party to the proceeding.

eFiling is encouraged. More detailed information relating to filing requirements, interventions, protests, service, and qualifying facilities filings can be found at: *http://www.ferc.gov/docs-filing/efiling/filing-req.pdf.* For other information, call (866) 208–3676 (toll free). For TTY, call (202) 502–8659.

Dated: April 29, 2013.

Nathaniel J. Davis, Sr.,

Deputy Secretary.

[FR Doc. 2013–10635 Filed 5–3–13; 8:45 am]

BILLING CODE 6717–01–P

DEPARTMENT OF ENERGY

Federal Energy Regulatory Commission

Notice of Commissioner and Staff Attendance at North American Electric Reliability Corporation Meetings

The Federal Energy Regulatory Commission hereby gives notice that members of the Commission and/or Commission staff may attend the following meetings:

North American Electric Reliability Corporation
Member Representatives Committee and Board of Trustees Meetings
Board of Trustees Compliance Committee, Finance and Audit Committee, and Standards Oversight and Technology Committee Meetings
Sheraton Boston Hotel, 39 Dalton Street, Boston, MA, 02199.

May 8 (7:00 a.m.–5:00 p.m.) and May 9 (8:00 a.m.–1:00 p.m.), 2013

Further information regarding these meetings may be found at: *http://www.nerc.com/calendar.php.*

The discussions at the meetings, which are open to the public, may address matters at issue in the following Commission proceedings:

Docket No. RC11–5, North American Electric Reliability Corporation
Docket No. RC11–6, North American Electric Reliability Corporation
Docket No. RC13–4, North American Electric Reliability Corporation
Docket No. RR8–4, North American Electric Reliability Corporation
Docket No. RR12–8, North American Electric Reliability Corporation
Docket No. RR13–2, North American Electric Reliability Corporation
Docket No. RR13–3, North American Electric Reliability Corporation
Docket No. RR13–4, North American Electric Reliability Corporation
Docket No. RD09–11, North American Electric Reliability Corporation
Docket No. RD10–2, North American Electric Reliability Corporation
Docket No. RD12–5, North American Electric Reliability Corporation
Docket No. RD13–2, North American Electric Reliability Corporation
Docket No. RD13–3, North American Electric Reliability Corporation
Docket No. RD13–5, North American Electric Reliability Corporation
Docket No. RD13–6, North American Electric Reliability Corporation
Docket No. RD13–8, North American Electric Reliability Corporation

For further information, please contact Jonathan First, 202–502–8529, or *jonathan.first@ferc.gov.*

Dated: April 29, 2013.

Kimberly D. Bose,

Secretary.

[FR Doc. 2013–10622 Filed 5–3–13; 8:45 am]

BILLING CODE 6717–01–P

DEPARTMENT OF ENERGY

Federal Energy Regulatory Commission

[Project Nos. 13424–002; 14516–000]

Lock+™ Hydro Friends Fund VI, LLC, FFP Iowa 2, LLC; Notice of Competing Preliminary Permit Applications Accepted for Filing and Soliciting Comments, Motions To Intervene, and Competing Applications

On January 2, 2013, Lock+™ Hydro Friends Fund VI, LLC (Hydro Friends) and Free Flow Power Iowa 2, LLC (FFP Iowa 2) filed preliminary permit applications, pursuant to section 4(f) of the Federal Power Act, proposing to study the feasibility of hydropower projects at the U.S. Army Corps of Engineers' (Corps) Mississippi River Lock and Dam No. 13, located on the Mississippi River near Clinton, in Clinton County, Iowa. The sole purpose of a preliminary permit, if issued, is to grant the permit holder priority to file

a license application during the permit term. A preliminary permit does not authorize the permit holder to perform any land-disturbing activities or otherwise enter upon lands or waters owned by others without the owners' express permission.

Hydro Friends' proposed Lock and Dam No. 13 Hydroelectric Project (L+D No. 13 Project or project) No. 13424–002 would consist of: (1) A concrete pad built just upstream of the submersible dike and supporting a frame module containing the turbines; (2) a 200-foot-long, 30-foot-deep frame module fitted with a trash rack and containing 15 hydropower turbines each having a capacity of 720 kilowatts (kW) for a total installed capacity of 10,800 kW operating at a net head of nine feet; (3) a 250-foot-long, 200-foot-wide tailrace; (4) a yet undetermined number of draft tubes that would be incorporated into the dyke; (5) a 69 kilovolt transmission line conveying the generated power to the existing power grid at an existing substation on the Illinois side of the river; and (6) appurtenant facilities. The estimated annual generation of the L+D No. 13 Project would be 66,225 megawatt hours. The project would operate run-of-river and utilize the water pool behind the Corps' dam.

Applicant Contact: Mark R. Stover, Vice President of Corporate Affairs, Hydro Green Energy, LLC, 900 Oakmont Lane, Suite 301, Westmont, IL 60559; phone: (877) 556–6566, ext. 711.

FFP Iowa 2's Mississippi Lock and Dam 13 Water Power Project (Mississippi L+D 13 Project or project) No. 14516–000 would consist of: (1) A powerhouse located at the west end of the movable section of the dam and containing three horizontal bulb turbines with a total nameplate capacity of 21.93 megawatts; (2) a 69-kilovolt, 1.25-miles-long either overhead or submarine transmission line connecting the project generation with Alliant Energy transmission facilities; and (3) appurtenant facilities. The majority of the project would be located on lands owned by the United States government and operated by the Corps. The estimated annual generation of the Mississippi L+D 13 Project would be 126.7 gigawatt-hours. The project would operate run-of-river and utilize the water pool behind the Corps' dam.

Applicant Contact: Daniel Lissner, Free Flow Power Corporation, 239 Causeway Street, Suite 300, Boston, MA 02114; phone: (978) 252–7111.

FERC Contact: Sergiu Serban; phone: (202) 502–6211.

Deadline for filing comments, motions to intervene, competing applications (without notices of intent), or notices of intent to file competing applications: 60 days from the issuance of this notice. Competing applications and notices of intent must meet the requirements of 18 CFR 4.36. Comments, motions to intervene, notices of intent, and competing applications may be filed electronically via the Internet. See 18 CFR 385.2001(a)(1)(iii) and the instructions on the Commission's Web site *http://www.ferc.gov/docs-filing/efiling.asp.* Commenters can submit brief comments up to 6,000 characters, without prior registration, using the eComment system at *http://www.ferc.gov/docs-filing/ecomment.asp.* You must include your name and contact information at the end of your comments. For assistance, please contact FERC Online Support. Although the Commission strongly encourages electronic filing, documents may also be paper-filed. To paper-file, mail an original and five copies to: Kimberly D. Bose, Secretary, Federal Energy Regulatory Commission, 888 First Street NE., Washington, DC 20426.

More information about this project, including a copy of the application, can be viewed or printed on the ''eLibrary'' link of the Commission's Web site at *http://www.ferc.gov/docs-filing/elibrary.asp.* Enter the docket number (P–13424–002, or P–14516–000) in the docket number field to access the document. For assistance, contact FERC Online Support.

Dated: April 29, 2013.

Kimberly D. Bose,

Secretary.

[FR Doc. 2013–10616 Filed 5–3–13; 8:45 am]

BILLING CODE 6717–01–P

DEPARTMENT OF ENERGY

Federal Energy Regulatory Commission

[Docket No. CP13–125–000]

Columbia Gas Transmission, LLC; Notice of Intent To Prepare an Environmental Assessment for the Proposed Giles County Project, Request for Comments on Environmental Issues, and Notice of Environmental Site Review

The staff of the Federal Energy Regulatory Commission (FERC or Commission) will prepare an environmental assessment (EA) that will discuss the environmental impacts of the Giles County Project involving construction and operation of facilities by Columbia Gas Transmission, LLC (Columbia) in Giles County, Virginia, and Summers and Monroe Counties, West Virginia. The Commission will use this EA in its decision-making process to determine whether the project is in the public convenience and necessity.

This notice announces the opening of the scoping process the Commission will use to gather input from the public and interested agencies on the project. Your input will help the Commission staff determine what issues they need to evaluate in the EA. Please note that the scoping period will close on May 30, 2013. Further details on how to submit written comments are in the Public Participation section of this notice.

On May 16, 2013, the Commission staff will conduct an onsite environmental review of the Giles County Project. The purpose of this site review is to examine the proposed location for Columbia's project. The site review will be accessible by vehicle and on foot. All interested parties planning to attend must provide their own transportation. Those attending should meet at the following time and location:

8:00 a.m. Thursday, May 16, 2013,
Holiday Inn Express, 805 Oakvale Rd., Princeton, West Virginia, 24740.

This notice is being sent to the Commission's current environmental mailing list for this project. State and local government representatives should notify their constituents of this proposed project and encourage them to comment on their areas of concern.

If you are a landowner receiving this notice, a pipeline company representative may contact you about the acquisition of an easement to construct, operate, and maintain the proposed facilities. The company would seek to negotiate a mutually acceptable agreement. However, if the Commission approves the project, that approval conveys with it the right of eminent domain. Therefore, if easement negotiations fail to produce an agreement, the pipeline company could initiate condemnation proceedings where compensation would be determined in accordance with state law.

Columbia provided landowners with a fact sheet prepared by the FERC entitled ''An Interstate Natural Gas Facility On My Land? What Do I Need To Know?''. This fact sheet addresses a number of typically-asked questions, including the use of eminent domain and how to participate in the Commission's proceedings. It is also available for viewing on the FERC Web site (*www.ferc.gov*).

Summary of the Proposed Project

Columbia proposes to construct and operate 12.6 miles of 8-inch-diameter

pipeline loop [1] in Giles County, Virginia, and Summers and Monroe Counties, West Virginia. The project would also include the installation of a pig launcher [2], a pig receiver, and a mainline valve. According to Columbia, its project is needed to provide about 46,000 dekatherms of natural gas per day to a manufacturing plant in Virginia undergoing a coal to natural gas conversion (the Celanese plant).

In association with the proposed project, Columbia Gas of Virginia (CGV) plans to construct about 4 miles of pipeline between the Celanese plant and the terminus of Columbia's pipeline loop in Giles County, Virginia. CGV's pipeline would not be under the jurisdiction of the FERC, but would be regulated by the Virginia State Corporation Commission. Depending on the route of CGV's pipeline, it could cross the Jefferson National Forest and portions of the Appalachian Trail.

The general location of the FERC regulated project facilities is shown in appendix 1.[3]

Land Requirements for Construction

Construction of the proposed facilities would disturb about 133 acres of land for the aboveground facilities and the pipeline. Following construction, Columbia would maintain about 69 acres for permanent operation of the project's facilities; the remaining acreage would be restored and revert to former uses. About 97 percent of the proposed pipeline loop parallels Columbia's existing pipeline right-of-way; 33 acres of new permanent easement would be required for operation of the pipeline loop and the remaining 36 acres would be a part of Columbia's existing pipeline right-of-way.

The EA Process

The National Environmental Policy Act (NEPA) requires the Commission to take into account the environmental impacts that could result from an action whenever it considers the issuance of a Certificate of Public Convenience and Necessity. NEPA also requires us [4] to discover and address concerns the public may have about proposals. This process is referred to as ''scoping.'' The main goal of the scoping process is to focus the analysis in the EA on the important environmental issues. By this notice, the Commission requests public comments on the scope of the issues to address in the EA. We will consider all filed comments during the preparation of the EA.

In the EA we will discuss impacts that could occur as a result of the construction and operation of the proposed project under these general headings:

- geology and soils;
- land use;
- water resources, fisheries, and wetlands;
- Cultural resources;
- Vegetation and wildlife;
- Air quality and noise;
- Endangered and threatened species; and
- Public safety.

We will also evaluate reasonable alternatives to the proposed project or portions of the project, and make recommendations on how to lessen or avoid impacts on the various resource areas.

The EA will present our independent analysis of the issues. The EA will be available in the public record through eLibrary. Depending on the comments received during the scoping process, we may also publish and distribute the EA to the public for an allotted comment period. We will consider all comments on the EA before making our recommendations to the Commission. To ensure we have the opportunity to consider and address your comments, please carefully follow the instructions in the Public Participation section below.

With this notice, we are asking agencies with jurisdiction by law and/or special expertise with respect to the environmental issues of this project to formally cooperate with us in the preparation of the EA.[5] Agencies that would like to request cooperating agency status should follow the instructions for filing comments provided under the Public Participation section of this notice.

Consultations Under Section 106 of the National Historic Preservation Act

In accordance with the Advisory Council on Historic Preservation's implementing regulations for section 106 of the National Historic Preservation Act, we are using this notice to initiate consultation with applicable State Historic Preservation Offices (SHPO), and to solicit their views and those of other government agencies, interested Indian tribes, and the public on the project's potential effects on historic properties.[6] We will define the project-specific Area of Potential Effects (APE) in consultation with the SHPOs as the project develops. On natural gas facility projects, the APE at a minimum encompasses all areas subject to ground disturbance (examples include construction right-of-way, contractor/pipe storage yards, compressor stations, and access roads). Our EA for this project will document our findings on the impacts on historic properties and summarize the status of consultations under section 106.

Public Participation

You can make a difference by providing us with your specific comments or concerns about the project. Your comments should focus on the potential environmental effects, reasonable alternatives, and measures to avoid or lessen environmental impacts. The more specific your comments, the more useful they will be. To ensure that your comments are timely and properly recorded, please send your comments so that the Commission receives them in Washington, DC on or before May 30, 2013.

For your convenience, there are three methods which you can use to submit your comments to the Commission. In all instances please reference the project docket number (CP13–125–000) with your submission. The Commission encourages electronic filing of comments and has expert staff available to assist you at (202) 502–8258 or *efiling@ferc.gov.*

(1) You can file your comments electronically using the eComment feature on the Commission's Web site (*www.ferc.gov*) under the link to Documents and Filings. This is an easy method for interested persons to submit brief, text-only comments on a project;

(2) You can file your comments electronically using the eFiling feature

[1] A pipeline loop is a segment of pipe constructed parallel to an existing pipeline to increase capacity.

[2] A ''pig'' is a tool that the pipeline company inserts into and pushes through the pipeline for cleaning the pipeline, conducting internal inspections, or other purposes.

[3] The appendices referenced in this notice will not appear in the **Federal Register**. Copies of appendices were sent to all those receiving this notice in the mail and are available at *www.ferc.gov* using the link called ''eLibrary'' or from the Commission's Public Reference Room, 888 First Street NE., Washington, DC 20426, or call (202) 502–8371. For instructions on connecting to eLibrary, refer to the last page of this notice.

[4] ''We,'' ''us,'' and ''our'' refer to the environmental staff of the Commission's Office of Energy Projects.

[5] The Council on Environmental Quality regulations addressing cooperating agency responsibilities are at Title 40, Code of Federal Regulations, § 1501.6.

[6] The Advisory Council on Historic Preservation's regulations are at Title 36, Code of Federal Regulations, Part 800. Those regulations define historic properties as any prehistoric or historic district, site, building, structure, or object included in or eligible for inclusion in the National Register of Historic Places.

on the Commission's Web site (*www.ferc.gov*) under the link to Documents and Filings. With eFiling, you can provide comments in a variety of formats by attaching them as a file with your submission. New eFiling users must first create an account by clicking on ''eRegister.'' You must select the type of filing you are making. If you are filing a comment on a particular project, please select ''Comment on a Filing''; or

(3) You can file a paper copy of your comments by mailing them to the following address: Kimberly D. Bose, Secretary, Federal Energy Regulatory Commission, 888 First Street NE., Room 1A, Washington, DC 20426.

Environmental Mailing List

The environmental mailing list includes federal, state, and local government representatives and agencies; elected officials; environmental and public interest groups; Native American Tribes; other interested parties; and local libraries and newspapers. This list also includes all affected landowners (as defined in the Commission's regulations) who are potential right-of-way grantors, whose property may be used temporarily for project purposes, or who own homes within certain distances of aboveground facilities, and anyone who submits comments on the project. We will update the environmental mailing list as the analysis proceeds to ensure that we send the information related to this environmental review to all individuals, organizations, and government entities interested in and/or potentially affected by the proposed project.

If we publish and distribute the EA, copies will be sent to the environmental mailing list for public review and comment. If you would prefer to receive a paper copy of the document instead of the CD version or would like to remove your name from the mailing list, please return the attached Information Request (appendix 2).

Becoming an Intervenor

In addition to involvement in the EA scoping process, you may want to become an ''intervenor'' which is an official party to the Commission's proceeding. Intervenors play a more formal role in the process and are able to file briefs, appear at hearings, and be heard by the courts if they choose to appeal the Commission's final ruling. An intervenor formally participates in the proceeding by filing a request to intervene. Instructions for becoming an intervenor are in the User's Guide under the ''e-filing'' link on the Commission's Web site.

Additional Information

Additional information about the project is available from the Commission's Office of External Affairs, at (866) 208–FERC, or on the FERC Web site at *www.ferc.gov* using the ''eLibrary'' link. Click on the eLibrary link, click on ''General Search'' and enter the docket number, excluding the last three digits in the Docket Number field (i.e., CP13–125). Be sure you have selected an appropriate date range. For assistance, please contact FERC Online Support at *FercOnlineSupport@ferc.gov* or toll free at (866) 208–3676, or for TTY, contact (202) 502–8659. The eLibrary link also provides access to the texts of formal documents issued by the Commission, such as orders, notices, and rulemakings.

In addition, the Commission now offers a free service called eSubscription which allows you to keep track of all formal issuances and submittals in specific dockets. This can reduce the amount of time you spend researching proceedings by automatically providing you with notification of these filings, document summaries, and direct links to the documents. Go to *www.ferc.gov/esubscribenow.htm.*

Finally, public meetings or site visits will be posted on the Commission's calendar located at *www.ferc.gov/EventCalendar/EventsList.aspx* along with other related information.

Dated: April 30, 2013.

Kimberly D. Bose,

Secretary.

[FR Doc. 2013–10644 Filed 5–3–13; 8:45 am]

BILLING CODE 6717–01–P

DEPARTMENT OF ENERGY

Federal Energy Regulatory Commission

[Docket No. CP13–96–000]

Gulf South Pipeline Company, LP; Supplemental Notice of Intent To Prepare an Environmental Assessment for the Proposed Southeast Market Expansion Project and Request for Comments on Environmental Issues

As previously noticed on November 19, 2012, and supplemented herein, the staff of the Federal Energy Regulatory Commission (FERC or Commission) will prepare an environmental assessment (EA) that will discuss the environmental impact of the Southeast Market Expansion Project (SEME Project or Project) involving the construction and operation of facilities by Gulf South Pipeline Company, LP (Gulf South) in Jasper, Forrest, Perry, Greene, George, and Jackson Counties, Mississippi and Mobile County, Alabama. The Commission will use this EA in its decision-making process to determine whether the Project is in the public convenience and necessity. The Commission staff began its review of the Project on September 17, 2012, during the pre-filing process under Docket No. PF12–21–000. The initial scoping period closed on December 19, 2012.

This notice announces the opening of a supplemental scoping period that the Commission will use to gather input from the public and newly affected landowners due to Gulf South's proposed pipeline right-of-way route modifications and change in location of the Moss Point Compressor Station made after the initial scoping period. This notice is being sent as a supplement to the *Notice of Intent to Prepare an Environmental Assessment for the Planned Southeast Market Expansion Project, Request for Comments on Environmental Issues, and Notice of Public Scoping Meetings* (original NOI) issued November 19, 2012 to ensure that all stakeholders on the Commission's current environmental mailing list have been notified and provide the opportunity for newly affected landowners to comment on the Project. Your input will help the Commission staff determine what issues they need to evaluate in the EA. Please note that this supplemental scoping period will close on May 28, 2013. Further details on how to submit written comments are in the Public Participation section of this notice.

If you are a landowner receiving this notice, a pipeline company representative may contact you about the acquisition of an easement to construct, operate, and maintain the planned facilities. The company would seek to negotiate a mutually acceptable agreement. However, if the Commission approves the Project, that approval conveys with it the right of eminent domain. Therefore, if easement negotiations fail to produce an agreement, the pipeline company could initiate condemnation proceedings where compensation would be determined in accordance with state law.

A fact sheet prepared by the FERC entitled ''An Interstate Natural Gas Facility On My Land? What Do I Need To Know?'' is available for viewing on the FERC Web site (*www.ferc.gov*). This fact sheet addresses a number of typically-asked questions, including the use of eminent domain and how to participate in the Commission's proceedings.

Summary of the Proposed Project (as supplemented)

As indicated in the original NOI, Gulf South plans to construct 70.1 miles of new 30-inch-diameter and 24-inch-diameter pipeline (approximately 42.3 miles and 27.8 miles, respectively), which would begin near the southern terminus of Petal Gas Storage, L.L.C.'s transmission facilities in Forrest County, Mississippi and end at Gulf South's existing Index 311 pipeline tie-in, approximately 4.5 miles west of Semmes, Alabama. In addition, Gulf South would construct 3 new compressor stations located in Forrest County, Jasper County, and Jackson County, Mississippi. The SEME Project would provide about 450 million standard cubic feet of natural gas per day to the Florida and Southeast markets via an interconnect with Florida Gas Transmission Company and a new high pressure interconnect with Gulf South's existing Index 311 pipeline. According to Gulf South, the Project is necessary to provide new natural gas transportation capacity to meet an increased level of gas supply in the region.

The proposed modifications consist of the following:

- A 4.5-mile-long variation in Perry County, Mississippi (MPs 18.7 to 23.2) that moved the pipeline alignment about 2,000 feet to the southwest;
- A 1.7-mile-long variation in Green County, Mississippi (MPs 27.9 to 29.6) that moved the pipeline alignment about 1,000 feet to the northeast;
- A 5.6-mile-long variation in George County, Mississippi (MPs 47.3 to 52.9) that moved the pipeline alignment more than 14,000 feet to the east;
- A 3.1-mile-long variation, also in George County (MPs 58.0 to 61.1), that moved the alignment about 2,000 feet to the south; and
- A change in location of the Moss Point Compressor Station site from the east to the west side of Highway 63 in Jackson County, Mississippi.

The general locations of the proposed modifications are shown in Appendix 1.[1]

Land Requirements for Construction

Construction of the proposed facilities would disturb about 1,167 acres of land for the aboveground facilities, pipeline, and access roads. Following construction, Gulf South would maintain about 455 acres for permanent operation of the Project's facilities; the remaining acreage would be restored and revert to former uses. About 79 percent of the pipeline route would parallel existing pipeline, utility, or road rights-of-way.

The EA Process

The National Environmental Policy Act (NEPA) requires the Commission to take into account the environmental impacts that could result from an action whenever it considers the issuance of a Certificate of Public Convenience and Necessity. NEPA also requires us[2] to discover and address concerns the public may have about proposals. This process is referred to as scoping. The main goal of the scoping process is to focus the analysis in the EA on the important environmental issues. By this notice, the Commission requests public comments on the scope of the issues to address in the EA. We will consider all filed comments during the preparation of the EA.

In the EA we will discuss impacts that could occur as a result of the construction and operation of the planned Project under these general headings:

- Geology and soils;
- Land use;
- Water resources, fisheries, and wetlands;
- Cultural resources;
- Vegetation and wildlife;
- Air quality and noise;
- Endangered and threatened species;
- Socioeconomics; and
- Public safety.

We will also evaluate possible alternatives to the planned Project or portions of the Project, and make recommendations on how to lessen or avoid impacts on the various resource areas.

The EA will present our independent analysis of the issues. The EA will be available in the public record through eLibrary. Depending on the comments received during the scoping process, we may also publish and distribute the EA to the public for an allotted comment period. We will consider all comments on the EA before we make our recommendations to the Commission. To ensure we have the opportunity to consider and address your comments, please carefully follow the instructions in the Public Participation section below.

On December 20, 2012 Gulf South filed its draft resource reports for the Project. The FERC reviewed these draft reports and provided comments to Gulf South on February 15, 2013. Gulf South submitted its formal application, including the final resource reports, on March 8, 2013. We are now in the process of reviewing Gulf South's filed application and developing the EA in cooperation with the U.S. Department of the Interior Fish and Wildlife Service and the U.S. Army Corps of Engineers. A diagram illustrating the environmental review process is found in Appendix 2.

Consultations Under Section 106 of the National Historic Preservation Act

In accordance with the Advisory Council on Historic Preservation's implementing regulations for section 106 of the National Historic Preservation Act, we are using this notice to initiate consultation with applicable State Historic Preservation Offices (SHPOs), and to solicit their views and those of other government agencies, interested Indian tribes, and the public on the Project's potential effects on historic properties.[3] We will define the Project-specific Area of Potential Effects (APE) in consultation with the SHPOs as the Project develops. On natural gas facility projects, the APE at a minimum encompasses all areas subject to ground disturbance (examples include construction right-of-way, contractor/pipe storage yards, compressor stations, and access roads). Our EA for this Project will document our findings on the impacts on historic properties and summarize the status of consultations under section 106.

Public Participation

You can make a difference by providing us with your specific comments or concerns about the Project. Your comments should focus on the potential environmental effects, reasonable alternatives, and measures to avoid or lessen environmental impacts. The more specific your comments, the more useful they will be. Landowners or other stakeholders who already submitted comments during pre-filing need not resubmit those comments. To ensure that your comments are timely and properly recorded, please send your comments so that the Commission

[1] The appendices referenced in this notice will not appear in the **Federal Register**. Copies of the appendices were sent to all those receiving this notice in the mail and are available at *www.ferc.gov* using the link called ''eLibrary'' or from the Commission's Public Reference Room, 888 First Street NE., Washington, DC 20426, or call (202) 502–8371. For instructions on connecting to eLibrary, refer to the last page of this notice.

[2] ''We,'' ''us,'' and ''our'' refer to the environmental staff of the Commission's Office of Energy Projects.

[3] The Advisory Council on Historic Preservation regulations are at Title 36, Code of Federal Regulations, Part 800. Those regulations define historic properties as any prehistoric or historic district, site, building, structure, or object included in or eligible for inclusion in the National Register of Historic Places.

receives them in Washington, DC on or before May 28, 2013.

For your convenience, there are three methods you can use to submit your comments to the Commission. In all instances, please reference the Project docket number (CP13–96–000) with your submission. The Commission encourages electronic filing of comments and has expert staff available to assist you at (202) 502–8258 or *efiling@ferc.gov.*

(1) You can file your comments electronically using the eComment feature located on the Commission's Web site (*www.ferc.gov*) under the link to Documents and Filings. This is an easy method for interested persons to submit brief, text-only comments on a project;

(2) You can file your comments electronically using the eFiling feature located on the Commission's Web site (*www.ferc.gov*) under the link to Documents and Filings. With eFiling, you can provide comments in a variety of formats by attaching them as a file with your submission. New eFiling users must first create an account by clicking on ''eRegister.'' You must select the type of filing you are making. If you are filing a comment on a particular project, please select ''Comment on a Filing''; or

(3) You can file a paper copy of your comments by mailing them to the following address: Kimberly D. Bose, Secretary, Federal Energy Regulatory Commission, 888 First Street NE., Room 1A, Washington, DC 20426.

Environmental Mailing List

The environmental mailing list includes federal, state, and local government representatives and agencies; elected officials; environmental and public interest groups; Native American Tribes; other interested parties; and local libraries and newspapers. This list also includes all affected landowners (as defined in the Commission's regulations) who are potential right-of-way grantors, whose property may be used temporarily for Project purposes, or who own homes within certain distances of aboveground facilities, and anyone who submits comments on the Project. We will update the environmental mailing list as the analysis proceeds to ensure that we send the information related to this environmental review to all individuals, organizations, and government entities interested in and/or potentially affected by the proposed Project.

Copies of the EA will be sent to the environmental mailing list for public review and comment. If you would prefer to receive a paper copy of the document instead of the CD version or would like to remove your name from the mailing list, please return the attached Information Request (Appendix 3).

Becoming an Intervenor

You may want to become an ''intervenor'' which is an official party to the Commission's proceeding. Intervenors play a more formal role in the process and are able to file briefs, appear at hearings, and be heard by the courts if they choose to appeal the Commission's final ruling. An intervenor formally participates in the proceeding by filing a request to intervene. Instructions for becoming an intervenor are in the User's Guide under the ''e-filing'' link on the Commission's Web site.

Additional Information

Additional information about the Project is available from the Commission's Office of External Affairs, at (866) 208–FERC, or on the FERC Web site (*www.ferc.gov*) using the eLibrary link. Click on the eLibrary link, click on ''General Search'' and enter the docket number, excluding the last three digits in the Docket Number field (i.e., CP13–96). Be sure you have selected an appropriate date range. For assistance, please contact FERC Online Support at *FercOnlineSupport@ferc.gov* or toll free at (866) 208–3676, or for TTY, contact (202) 502–8659. The eLibrary link also provides access to the texts of formal documents issued by the Commission, such as orders, notices, and rulemakings.

In addition, the Commission offers a free service called eSubscription which allows you to keep track of all formal issuances and submittals in specific dockets. This can reduce the amount of time you spend researching proceedings by automatically providing you with notification of these filings, document summaries, and direct links to the documents. Go to *www.ferc.gov/esubscribenow.htm.* More information about the Project may also be found on Gulf South's Web site *http://www.gulfsouthpl.com/ExpansionProjects.aspx?id=1589.*

Dated: April 26, 2013.

Kimberly D. Bose,

Secretary.

[FR Doc. 2013–10612 Filed 5–3–13; 8:45 am]

BILLING CODE 6717–01–P

DEPARTMENT OF ENERGY

Federal Energy Regulatory Commission

[Docket Nos. CP13–132–000; CP13–36–000]

Transcontinental Gas Pipeline Company, LLC; Notice of Intent to Prepare an Environmental Impact Statement for the Proposed Northeast Connector Project and Request for Comments on Environmental Issues

The staff of the Federal Energy Regulatory Commission (FERC or Commission) will discuss the potential environmental effects of the Northeast Connector Project, involving construction and operation of natural gas facilities by Transcontinental Gas Pipeline Company, LLC (Transco), in the Commission's environmental impact statement (EIS) currently under preparation for the Rockaway Delivery Lateral Project (Rockaway Project) in Docket No. CP13–36–000. Under the proposed Northeast Connector Project, Transco would modify three existing compressor stations located in York County, Pennsylvania and Mercer and Middlesex Counties, New Jersey to deliver an additional 100,000 dekatherms per day of natural gas into the New York City region. This notice announces the opening of the scoping process the Commission will use to gather input from the public and interested agencies on the project.

The additional service proposed in the Northeast Connector Project would utilize transportation on Transco's proposed Rockaway Project, a 3.2-mile-long pipeline in Queens and Kings Counties, New York. The Commission approved Transco's request to begin the pre-filing review process for the Rockaway Project on March 25, 2009. Commission staff previously held a scoping period for the Rockaway Project from May 25, 2012 through June 25, 2012. Transco filed an application for the Rockaway Project on January 7, 2013. Because the Northeast Connector Project is operationally dependent on the Rockaway Project to provide the intended service, and the two projects have similar projected construction and in-service dates, the Commission staff will evaluate the two projects jointly in the EIS. This EIS will be used by the Commission in its decision-making process to determine whether the Rockaway and Northeast Connector Projects are in the public convenience and necessity.

Comments on the Northeast Connector Project may be submitted to the FERC either electronically or by mail. Further details on how to submit

comments are provided in the Public Participation section of this notice. Please note that the scoping period for the Northeast Connector Project will close on May 27, 2013.

This notice is being sent to the Commission's current environmental mailing list for both the Rockaway and Northeast Connector Projects. State and local government representatives are asked to notify their constituents of the Northeast Connector Project and encourage them to comment on their areas of concern. This scoping period is established to receive comments on the Northeast Connector Project, and comments previously filed with the FERC regarding the Rockaway Project should not be refiled under the Northeast Connector Project docket.

Summary of the Proposed Northeast Connector Project

The Northeast Connector Project would be constructed on lands owned by Transco within existing compressor station sites. No other landowners would be directly affected by the Northeast Connector Project facilities.

Transco proposes to:

- Add an incremental 6,540 horsepower (hp) of compression at its existing Compressor Station 195 in York County, Pennsylvania by: installing a new 35 kilovolt substation, variable frequency drive building, and associated coolers; replacing three existing natural gas-fired reciprocating engines and appurtenant facilities with two new electric motor drives; modifying the existing compressor units to be driven by the new electric motors; and modifying station piping and valves;
- Add an incremental 5,000 hp of compression at its existing Compressor Station 205 in Mercer County, New Jersey by uprating two existing electric motor drives and modifying the associated compressor units; and
- Add an incremental 5,400 hp of compression at its existing Compressor Station 207 in Middlesex County, New Jersey by uprating two existing electric motor drives and modifying associated gearboxes.

The modifications to the compressor stations would allow Transco to deliver an additional 100,000 dekatherms per day of natural gas to Brooklyn Union Gas Company, doing business as National Grid New York via an interconnect between Transco's existing Lower New York Bay Lateral and the proposed Rockaway Project. Overview and site-specific maps depicting the location of the proposed Northeast Connector Project are provided in Appendix 1.[1]

Land Requirements for Construction

Construction of the Northeast Connector facilities would disturb a total of 25.2 acres of land within the existing yard at Compressor Station 195, which is owned by Transco. Construction activities at Compressor Stations 205 and 207 would occur within the existing compressor buildings at these sites and would not disturb any additional land.

The EIS Process

The National Environmental Policy Act (NEPA) requires the Commission to take into account the environmental impacts that could result from an action whenever it considers the issuance of a Certificate of Public Convenience and Necessity. NEPA also requires us [2] to discover and address concerns the public may have about proposed projects. This process is referred to as scoping. The main goal of the scoping process is to focus the analysis in the EIS on important environmental issues. By this notice, the Commission requests public comments on the scope of issues associated with the Northeast Connector Project to address in the EIS. We will consider all filed comments during the preparation of the EIS.

In the EIS, we will discuss impacts that could occur as a result of the construction and operation of the Northeast Connector Project under these general headings:

- geology;
- soils;
- water resources;
- vegetation;
- wildlife and aquatic resources;
- fisheries and aquatic resources;
- threatened, endangered, and other special-status species;
- land use, recreation, special interest areas, and visual resources;
- socioeconomics;
- cultural resources;
- air quality and noise;
- reliability and safety; and
- cumulative environmental impacts.

We will also evaluate possible alternatives to the proposed project or portions of the project, and make recommendations on how to lessen or avoid impacts on the various resource areas.

The FERC staff is in the process of preparing an EIS for the Rockaway Project. Five other agencies are participating as cooperating agencies in the preparation of this EIS: the National Park Service, Environmental Protection Agency, U.S. Army Corps of Engineers, National Marine Fisheries Service, and New York City Mayor's Office of Environmental Coordination. With this notice, we are asking other agencies with jurisdiction by law and/or special expertise with respect to environmental issues related to the Northeast Connector Project to formally cooperate with us in the preparation of the EIS.[3] Agencies that would like to request cooperating agency status should follow the instructions for filing comments provided under the Public Participation section of this notice.

The EIS will present our independent analysis of the issues. We will publish and distribute the draft EIS for public comment. After the comment period, we will consider all timely comments and revise the document, as necessary, before issuing a final EIS. To ensure we have the opportunity to consider and address your comments, please carefully follow the instructions in the Public Participation section below.

Consultations Under Section 106 of the National Historic Preservation Act

In accordance with the Advisory Council on Historic Preservation's implementing regulations for Section 106 of the National Historic Preservation Act, we are using this notice to initiate consultation with the Pennsylvania and New Jersey State Historic Preservation Offices (SHPOs), and to solicit their views and those of other government agencies, interested Indian tribes, and the public on the project's potential effects on historic properties.[4] The EIS will document our findings on the impacts on historic properties and summarize the status of consultations under Section 106. We note that Transco has signed categorical exclusions with both the Pennsylvania and New Jersey SHPOs exempting work

[1] The appendices referenced in this notice are not being printed in the **Federal Register**. Copies of appendices were sent to all those receiving this notice in the mail and are available at *www.ferc.gov* using the link called ''eLibrary'' or from the Commission's Public Reference Room, 888 First Street NE., Washington, DC 20426, or call (202) 502–8371. For instructions on connecting to eLibrary, refer to the last page of this notice.

[2] ''We,'' ''us,'' and ''our'' refer to the environmental staff of the Commission's Office of Energy Projects.

[3] The Council on Environmental Quality regulations addressing cooperating agency responsibilities are at Title 40, Code of Federal Regulations, Part 1501.6.

[4] The Advisory Council on Historic Preservation's regulations are at Title 36, Code of Federal Regulations, Part 800. Those regulations define historic properties as any prehistoric or historic district, site, building, structure, or object included in or eligible for inclusion in the National Register of Historic Places.

activities within existing facilities from further review by the SHPOs.

Public Participation

You can make a difference by providing us with your specific comments or concerns about the Northeast Connector Project. Your comments should focus on the potential environmental effects, reasonable alternatives, and measures to avoid or lessen environmental impacts. The more specific your comments, the more useful they will be. To ensure that your comments are timely and properly recorded, please send your comments so that the Commission receives them in Washington, DC on or before May 27, 2013.

For your convenience, there are three methods you can use to submit your comments to the Commission. In all instances, please reference the project docket number (CP13–132–000) with your submission. The Commission encourages electronic filing of comments and has expert staff available to assist you at (202) 502–8258 or *efiling@ferc.gov.*

(1) You can file your comments electronically using the *eComment* feature located on the Commission's Web site (*www.ferc.gov*) under the link to *Documents and Filings.* This is an easy method for interested persons to submit brief, text-only comments on a project;

(2) You can file your comments electronically using the *eFiling* feature located on the Commission's Web site (*www.ferc.gov*) under the link to *Documents and Filings.* With eFiling, you can provide comments in a variety of formats by attaching them as a file with your submission. New eFiling users must first create an account by clicking on ''*eRegister.*'' You must select the type of filing you are making. If you are filing a comment on a particular project, please select ''Comment on a Filing''; or

(3) You can file a paper copy of your comments by mailing them to the following address.

Kimberly D. Bose, Secretary, Federal Energy Regulatory Commission, 888 First Street NE., Room 1A, Washington, DC 20426.

Environmental Mailing List

The environmental mailing list includes federal, state, and local government representatives and agencies; elected officials; environmental and public interest groups; Native American Tribes; other interested parties; and local libraries and newspapers. This list also includes all affected landowners for both the Northeast Connector and Rockaway Projects, including those who own homes within certain distances of aboveground facilities, and anyone who submits comments on the project. We will update the environmental mailing list as the analysis proceeds to ensure that we send the information related to this environmental review to all individuals, organizations, and government entities interested in and/or potentially affected by the planned project.

Copies of the completed draft EIS will be sent to the environmental mailing list for public review and comment. If you would prefer to receive a paper copy of the document instead of a CD version or would like to remove your name from the mailing list, please return the attached Information Request (appendix 2). If you previously sent the Commission an ''Information Request'' for the Rockaway Project, you do not need to resubmit your request.

Becoming an Intervenor

You may want to become an ''intervenor'', which is an official party to the Commission's proceeding on a project. Intervenors play a more formal role in the process and are able to file briefs, appear at hearings, and be heard by the courts if they choose to appeal the Commission's final ruling. An intervenor formally participates in the proceeding by filing a request to intervene. Instructions for becoming an intervenor are included in the ''For Citizens'' section of the Commission's Web site, under the ''Get Involved'' link (*http://www.ferc.gov/for-citizens/get-involved.asp*).

Additional Information

Additional information about the project is available from the Commission's Office of External Affairs, at (866) 208–FERC, or on the FERC Web site (*www.ferc.gov*) using the eLibrary link. Click on the eLibrary link, click on ''General Search'' and enter the docket number, excluding the last three digits in the Docket Number field (i.e., CP13–132). Be sure you have selected an appropriate date range. For assistance, please contact FERC Online Support at *FercOnlineSupport@ferc.gov* or toll free at (866) 208–3676, or for TTY, contact (202) 502–8659. The eLibrary link also provides access to the texts of formal documents issued by the Commission, such as orders, notices, and rulemakings.

In addition, the Commission offers a free service called eSubscription which allows you to keep track of all formal issuances and submittals in specific dockets. This can reduce the amount of time you spend researching proceedings by automatically providing you with notification of these filings, document summaries, and direct links to the documents. Go to *www.ferc.gov/esubscribenow.htm.*

Finally, Transco has established a toll-free phone number (1–866–455–9103) so that parties can call them directly with questions about the project and an email support address *(PipelineExpansion@williams.com).*

Dated: April 26, 2013.

Kimberly D. Bose,

Secretary.

[FR Doc. 2013–10613 Filed 5–3–13; 8:45 am]

BILLING CODE 6717–01–P

DEPARTMENT OF ENERGY

Federal Energy Regulatory Commission

Notice of Environmental Site Review

York Haven Power Company, LLC.	Project No. 1888–030.
Exelon Generation Company, LLC.	Project No. 405–106.
Exelon Generation Company, LLC.	Project No. 2355–018.

On May 21, 22, and 23, 2013, Commission staff will hold an environmental site review for the Susquehanna River Projects, including the York Haven Project (FERC No. 1888–030), the Conowingo Hydroelectric Project (FERC No. 405–106), and the Muddy Run Pumped Storage Project (FERC No. 2355–018). The projects are located on the Susquehanna River in York, Dauphin, and Lancaster counties, Pennsylvania, and Cecil and Hartford counties, Maryland. The purpose of the site review is to introduce the Commission's contractor team to the project. All participants should be prepared to provide their own transportation.

Schedule for the York Haven Hydroelectric Project Site Review

Date and Time: Tuesday, May 21, 2013, 9:00 a.m.

Location: York Haven Project, 1 Hydro Park Drive & Locust Street, York Haven, Pennsylvania 17370.

All participants planning to attend the site visit should RSVP to Dave David at (717) 266–9475 or *DDavid@yorkhavenpower.com.*

Schedule for the Conowingo Hydroelectric Project Site Review

Date and Time: Wednesday, May 22, 2013, 10:00 a.m.

Location: Conowingo Project, Conowingo Pavilion (next to Conowingo dam), 2569 Shures Landing Road, Darlington, Maryland 21034.

All participants planning to attend the Conowingo Project site review should RSVP to Robert Judge at (610) 765–5331 or *Rober.Judge2@exeloncorp.com.*

Schedule for the Muddy Run Pumped Storage Project Site Review

Date and Time: Thursday, May 23, 2013, 9:00 a.m.

Location: Visitor's Center at Muddy Run Recreation Park, Muddy Run Pumped Storage Project, 172 Bethesda Church Rd W, Holtwood, Pennsylvania.

All participants planning to attend the Muddy Run Project site review should RSVP to Robert Judge at (610) 765–5331 or *Rober.Judge2@exeloncorp.com.*

If you have any questions please contact Emily Carter at (202) 502–6512 or *emily.carter@ferc.gov.*

Dated: April 30, 2013.

Kimberly D. Bose,

Secretary.

[FR Doc. 2013–10641 Filed 5–3–13; 8:45 am]

BILLING CODE 6717–01–P

DEPARTMENT OF ENERGY

Federal Energy Regulatory Commission

[Docket Nos. PR13–47–000; PR13–19–000]

Cranberry Pipeline Corporation; Notice of Filing

Take notice that on April 25, 2013, Cranberry Pipeline Corporation (Cranberry) submitted tariff records to reflect revisions to its transportation and storage rates, as well as fuel and lost-and- unaccounted-for percentages that Cranberry proposed in its Petition for Rate Approval filed on December 18, 2012, in Docket No. PR13–19–000.

Any person desiring to participate in this rate filing must file in accordance with Rules 211 and 214 of the Commission's Rules of Practice and Procedure (18 CFR 385.211 and 385.214). Protests will be considered by the Commission in determining the appropriate action to be taken, but will not serve to make protestants parties to the proceeding. Any person wishing to become a party must file a notice of intervention or motion to intervene, as appropriate. Such notices, motions, or protests must be filed on or before the date as indicated below. Anyone filing an intervention or protest must serve a copy of that document on the Applicant. Anyone filing an intervention or protest on or before the intervention or protest date need not serve motions to intervene or protests on persons other than the Applicant.

The Commission encourages electronic submission of protests and interventions in lieu of paper using the ''eFiling'' link at *http://www.ferc.gov.* Persons unable to file electronically should submit an original and 7 copies of the protest or intervention to the Federal Energy Regulatory Commission, 888 First Street NE., Washington, DC 20426.

This filing is accessible on-line at *http://www.ferc.gov*, using the ''eLibrary'' link and is available for review in the Commission's Public Reference Room in Washington, DC. There is an ''eSubscription'' link on the Web site that enables subscribers to receive email notification when a document is added to a subscribed docket(s). For assistance with any FERC Online service, please email *FERCOnlineSupport@ferc.gov*, or call (866) 208–3676 (toll free). For TTY, call (202) 502–8659.

Comment Date: 5:00 p.m. Eastern Time on Wednesday, May 8, 2013.

Dated: April 26, 2013.

Kimberly D. Bose,

Secretary.

[FR Doc. 2013–10623 Filed 5–3–13; 8:45 am]

BILLING CODE 6717–01–P

DEPARTMENT OF ENERGY

Federal Energy Regulatory Commission

[Project No. 2307–064]

Alaska Electric Light & Power Company; Notice of Intent To File License Application, Filing of Pre-Application Document, and Approving Use of the Traditional Licensing Process

a. *Type of Filing:* Notice of Intent to File License Application and Request to Use the Traditional Licensing Procedures.

b. *Project No.:* 2307–064.

c. *Date Filed:* March 29, 2013.

d. *Submitted By:* Alaska Electric Light & Power Company (AEL&P).

e. *Name of Project:* Salmon and Annex Creek Hydroelectric Project.

f. *Location:* On Salmon and Annex Creeks, in the City and Borough of Juneau, Alaska. The project occupies 692.6 acres of United States lands administered by the U.S. Forest Service.

g. *Filed Pursuant to:* 18 CFR 5.3 of the Commission's regulations.

h. *Potential Applicant Contact:* K. Scott Willis, Vice President, Generation, AEL&P, 5601 Tonsgard Court, Juneau, AK 99801; (907) 463–6396; email *scott.willis@aelp.com.*

i. *Contact:* Suzanne Novak at (202) 502–6665; or email at *suzanne.novak@ferc.gov.*

j. AEL&P filed its request to use the Traditional Licensing Process on March 29, 2013. AEL&P provided public notice of its request on March 29, 2013. In a letter dated May 1, 2013, the Director of the Division of Hydropower Licensing approved AEL&P's request to use the Traditional Licensing Process.

k. With this notice, we are initiating informal consultation with: (a) The U.S. Fish and Wildlife Service and NOAA Fisheries under section 7 of the Endangered Species Act and the joint agency regulations thereunder at 50 CFR, Part 402; (b) NOAA Fisheries under section 305(b) of the Magnuson-Stevens Fishery Conservation and Management Act and implementing regulations at 50 CFR 600.920; and (c) the Alaska State Historic Preservation Officer, as required by section 106, National Historical Preservation Act, and the implementing regulations of the Advisory Council on Historic Preservation at 36 CFR 800.2.

l. With this notice, we are designating AEL&P as the Commission's non-federal representative for carrying out informal consultation, pursuant to section 7 of the Endangered Species Act, section 305 of the Magnuson-Stevens Fishery Conservation and Management Act, and section 106 of the National Historic Preservation Act.

m. AEL&P filed a Pre-Application Document (PAD; including a proposed process plan and schedule) with the Commission, pursuant to 18 CFR 5.6 of the Commission's regulations.

n. A copy of the PAD is available for review at the Commission in the Public Reference Room or may be viewed on the Commission's Web site (*http://www.ferc.gov*), using the ''eLibrary'' link. Enter the docket number, excluding the last three digits in the docket number field to access the document. For assistance, contact FERC Online Support at *FERCONlineSupport@ferc.gov* or toll free at 1–866–208–3676, or for TTY, (202) 502–8659. A copy is also available for inspection and reproduction at the address in paragraph h.

o. The licensee states its unequivocal intent to submit an application for a new license for Project No. 2307–064. Pursuant to 18 CFR 16.8, 16.9, and 16.10 each application for a new license and any competing license applications must be filed with the Commission at least 24 months prior to the expiration of the existing license. All applications for license for this project must be filed by August 31, 2016.

p. Register online at *http://www.ferc.gov/docs-filing/esubscription.asp* to be notified via email of new filing and issuances

related to this or other pending projects. For assistance, contact FERC Online Support.

Dated: April 30, 2013.

Kimberly D. Bose,

Secretary.

[FR Doc. 2013–10646 Filed 5–3–13; 8:45 am]

BILLING CODE 6717–01–P

DEPARTMENT OF ENERGY

Federal Energy Regulatory Commission

[P–13123–002–CA]

Eagle Mountain Pumped Storage Hydroelectric Project, Eagle Crest Energy; Notice of Meeting With the Bureau of Land Management

a. *Date and Time of Meeting:* Wednesday, May 8, 2013, at 9:00 a.m. (Pacific Time).

b. *Location:* Palm Desert Center, University of California–Riverside, Building B, Rooms 114–117, 75080 Frank Sinatra Drive, Palm Desert, CA 92211. This notice is a follow-up to a notice published on April 23, 2013, which stated that the meeting would take place in the vicinity of Palm Springs but did not include the precise location of the meeting.

c. *FERC Contact:* Kenneth Hogan, (202) 502–8434: *Kenneth.Hogan@ferc.gov.*

d. *Purpose of the Meeting:* Commission staff will meet with the staff of the Bureau of Land Management to improve agency coordination and discuss the agencies' overlapping jurisdictions (pursuant to the Federal Land Policy and Management Act and the Federal Power Act), on the Eagle Mountain Pumped Storage Hydroelectric Project.

e. All local, state, and federal agencies, tribes, and interested parties, are hereby invited to observe the meeting in person.

f. This meeting was originally noticed on July 17, 2012, and subsequently postponed on August 3, 2012.

Dated: April 29, 2013.

Kimberly D. Bose,

Secretary.

[FR Doc. 2013–10615 Filed 5–3–13; 8:45 am]

BILLING CODE 6717–01–P

DEPARTMENT OF ENERGY

Federal Energy Regulatory Commission

[Docket No. OR13–17–000]

TransCanada Keystone Pipeline, LP; Notice of Petition for Declaratory Order

Take notice that on April 26, 2013, pursuant to Rule 207(a)(2) of the Commission's Rules of Practices and Procedure, 18 CFR 385.207(a)(2)(2012), TransCanada Keystone Pipeline, LP filed a petition seeking a declaratory order affirming the specified rate structure, rate principles and methodology in the manner described more fully in the petition.

Any person desiring to intervene or to protest this filing must file in accordance with Rules 211 and 214 of the Commission's Rules of Practice and Procedure (18 CFR 385.211, 385.214). Protests will be considered by the Commission in determining the appropriate action to be taken, but will not serve to make protestants parties to the proceeding. Any person wishing to become a party must file a notice of intervention or motion to intervene, as appropriate. Such notices, motions, or protests must be filed on or before the comment date. On or before the comment date, it is not necessary to serve motions to intervene or protests on persons other than the Applicant.

The Commission encourages electronic submission of protests and interventions in lieu of paper using the ''eFiling'' link at *http://www.ferc.gov.* Persons unable to file electronically should submit an original and 14 copies of the protest or intervention to the Federal Energy Regulatory Commission, 888 First Street NE., Washington, DC 20426.

This filing is accessible on-line at *http://www.ferc.gov,* using the ''eLibrary'' link and is available for review in the Commission's Public Reference Room in Washington, DC. There is an ''eSubscription'' link on the Web site that enables subscribers to receive email notification when a document is added to a subscribed docket(s). For assistance with any FERC Online service, please email *FERCOnlineSupport@ferc.gov,* or call (866) 208–3676 (toll free). For TTY, call (202) 502–8659.

Comment Date: 5:00 p.m. Eastern time on May 20, 2013.

Dated: April 30, 2012.

Kimberly D. Bose,

Secretary.

[FR Doc. 2013–10639 Filed 5–3–13; 8:45 am]

BILLING CODE 6717–01–P

DEPARTMENT OF ENERGY

Federal Energy Regulatory Commission

[Docket No. OR13–18–000]

Marketlink, LLC; Notice of Petition for Declaratory Order

Take notice that on April 26, 2013, pursuant to Rule 207(a)(2) of the Commission's Rules of Practices and Procedure, 18 CFR 385.207(a)(2)(2012), Marketlink, LLC filed a petition seeking a declaratory order affirming the specified rate structure, cost of service calculation, rate principles and methodology, and prorationing policy in the manner described more fully in the petition.

Any person desiring to intervene or to protest this filing must file in accordance with Rules 211 and 214 of the Commission's Rules of Practice and Procedure (18 CFR 385.211, 385.214). Protests will be considered by the Commission in determining the appropriate action to be taken, but will not serve to make protestants parties to the proceeding. Any person wishing to become a party must file a notice of intervention or motion to intervene, as appropriate. Such notices, motions, or protests must be filed on or before the comment date. On or before the comment date, it is not necessary to serve motions to intervene or protests on persons other than the Applicant.

The Commission encourages electronic submission of protests and interventions in lieu of paper using the ''eFiling'' link at *http://www.ferc.gov.* Persons unable to file electronically should submit an original and 14 copies of the protest or intervention to the Federal Energy Regulatory Commission, 888 First Street NE., Washington, DC 20426.

This filing is accessible on-line at *http://www.ferc.gov,* using the ''eLibrary'' link and is available for review in the Commission's Public Reference Room in Washington, DC. There is an ''eSubscription'' link on the Web site that enables subscribers to receive email notification when a document is added to a subscribed docket(s). For assistance with any FERC Online service, please email *FERCOnlineSupport@ferc.gov,* or call (866) 208–3676 (toll free). For TTY, call (202) 502–8659.

Comment Date: 5:00 p.m. Eastern time on May 20, 2013.

Dated: April 30, 2013.

Kimberly D. Bose,

Secretary.

[FR Doc. 2013–10640 Filed 5–3–13; 8:45 am]

BILLING CODE 6717–01–P

DEPARTMENT OF ENERGY

Federal Energy Regulatory Commission

[Project No. 14514–000]

Community of Elfin Cove, DBA Elfin Cove Utility Commission; Notice of Preliminary Permit Application Accepted for Filing and Soliciting Comments, Motions To Intervene, and Competing Applications

On April 24, 2013, the Community of Elfin Cove, DBA Elfin Cove Utility Commission County (Elfin Cove) filed an application for a preliminary permit, pursuant to section 4(f) of the Federal Power Act (FPA), proposing to study the feasibility of the Crooked Creek and Jim's Lake Hydroelectric Project (project) to be located on Crooked Creek and Jim's Lake, 70 miles east of Juneau, in the unincorporated Sitka Recording District, Alaska. The sole purpose of a preliminary permit, if issued, is to grant the permit holder priority to file a license application during the permit term. A preliminary permit does not authorize the permit holder to perform any land-disturbing activities or otherwise enter upon lands or waters owned by others without the owners' express permission.

The proposed project would consist of two developments, the Upper System and the Lower System.

Upper System

(1) A 40-foot-long, 4-foot-wide, 4-foot-wide diversion structure to divert up to five cubic feet per second (cfs) from Crooked Creek; (2) a 1,450-foot-long, 1-foot-diameter penstock extending between the diversion structure and the powerhouse; (3) a powerhouse containing a 35-kilowatt (kW) power recovery turbine; (4) a 25-foot-long, 8-foot-wide, 3-foot-deep cobble-lined tailrace discharging flows into Jim's Lake; (5) an underground 7,300-foot-long, 7.2/12.47-kilovolt (kV) transmission line extending from both of the project powerhouses to Elfin Cove's existing 7.2/12.47-kV transmission line; and (6) appurtenant facilities.

Lower System

(1) A siphon intake located in Jim's Lake to divert seven cfs from Jim's Lake; (2) a 1,800-foot-long, 1.2-foot-diameter penstock extending between the siphon intake and the powerhouse; (3) a powerhouse containing a 125-kW Pelton or impulse turbine; (4) a 150-foot-long, 8-foot-wide, 3-foot-deep cobble-lined tailrace discharging flows into Port Althorp; and (5) appurtenant facilities.

The estimated annual generation of the project would be 672.7 gigawatt-hours. The project would be partially located on 60 acres of federal lands managed by the U.S. Forest Service in the Tongass National Forest.

Applicant Contact: Mr. Joel Groves, Polarconsult Alaska, Inc., 1503 W. 33rd Avenue, #310, Anchorage, Alaska 99503; phone: (907) 258–2420 ext. 204.

FERC Contact: Kim Nguyen; phone: (202) 502–6105.

Deadline for filing comments, motions to intervene, competing applications (without notices of intent), or notices of intent to file competing applications: 60 days from the issuance of this notice. Competing applications and notices of intent must meet the requirements of 18 CFR 4.36. Comments, motions to intervene, notices of intent, and competing applications may be filed electronically via the Internet. See 18 CFR 385.2001(a)(1)(iii) and the instructions on the Commission's Web site *http://www.ferc.gov/docs-filing/efiling.asp.* Commenters can submit brief comments up to 6,000 characters, without prior registration, using the eComment system at *http://www.ferc.gov/docs-filing/ecomment.asp.* You must include your name and contact information at the end of your comments. For assistance, please contact FERC Online Support at *FERCOnlineSupport@ferc.gov* or toll free at 1–866–208–3676, or for TTY, (202) 502–8659. Although the Commission strongly encourages electronic filing, documents may also be paper-filed. To paper-file, mail an original and five copies to: Kimberly D. Bose, Secretary, Federal Energy Regulatory Commission, 888 First Street NE., Washington, DC 20426.

More information about this project, including a copy of the application, can be viewed or printed on the ''eLibrary'' link of Commission's Web site at *http://www.ferc.gov/docs-filing/elibrary.asp.* Enter the docket number (P–14514) in the docket number field to access the document. For assistance, contact FERC Online Support.

Dated: April 30, 2013.

Kimberly D. Bose,

Secretary.

[FR Doc. 2013–10637 Filed 5–3–13; 8:45 am]

BILLING CODE 6717–01–P

DEPARTMENT OF ENERGY

Federal Energy Regulatory Commission

[Project No. 14474–000]

FFP Project 111, LLC; Notice of Preliminary Permit Application Accepted for Filing and Soliciting Comments, Motions To Intervene, and Competing Applications

On January 1, 2013, FFP Project 111, LLC filed an application for a preliminary permit, pursuant to section 4(f) of the Federal Power Act (FPA), proposing to study the feasibility of a hydropower project located at the U.S. Army Corps of Engineers' (Corps) Newt Graham Lock and Dam, located on the Verdigris River near the town of Inola in Wagoner County, Oklahoma. The sole purpose of a preliminary permit, if issued, is to grant the permit holder priority to file a license application during the permit term. A preliminary permit does not authorize the permit holder to perform any land-disturbing activities or otherwise enter upon lands or waters owned by others without the owners' express permission.

The proposed project would consist of the following: (1) A 770-foot-long, 300-foot-wide intake channel with a 85-foot-long retaining wall; (2) a 100-foot-long overflow bank extension connecting the dam to the powerhouse; (3) a 140-foot-long, 90-foot-wide powerhouse, containing two generating units with a total capacity of 10.1 megawatts; (4) a 1,000-foot-long, 220-foot-wide tailrace with a 40-foot-long retaining wall; (5) a 4.16/99 kilo-Volt (kV) substation; (6) a 0.9 mile-long, 99 kV transmission line. The project would have an average annual generation of 32, 300 megawatt-hours, and utilize surplus water from the Newt Graham Lock and Dam as directed by the Corps.

Applicant Contact: Ms. Ramya Swaminathan, Free Flow Power Corporation, 239 Causeway Street, Suite 300, Boston, MA 02114. (978) 283–2822.

FERC Contact: Chris Casey, *christiane.casey@ferc.gov,* (202) 502–8577.

Deadline for filing comments, motions to intervene, competing applications (without notices of intent), or notices of intent to file competing applications: 60 days from the issuance of this notice. Competing applications and notices of intent must meet the requirements of 18 CFR 4.36. Comments, motions to intervene, notices of intent, and competing applications may be filed electronically via the Internet. See 18 CFR 385.2001(a)(1)(iii) and the instructions on the Commission's Web

site *http://www.ferc.gov/docs-filing/efiling.asp.* Commenters can submit brief comments up to 6,000 characters, without prior registration, using the eComment system at *http://www.ferc.gov/docs-filing/ecomment.asp.* You must include your name and contact information at the end of your comments. For assistance, please contact FERC Online Support at *FERCOnlineSupport@ferc.gov* or toll free at 1–866–208–3676, or for TTY, (202) 502–8659. Although the Commission strongly encourages electronic filing, documents may also be paper-filed. To paper-file, mail an original and five copies to: Kimberly D. Bose, Secretary, Federal Energy Regulatory Commission, 888 First Street NE., Washington, DC 20426.

More information about this project, including a copy of the application, can be viewed or printed on the ''eLibrary'' link of Commission's Web site at *http://www.ferc.gov/docs-filing/elibrary.asp.* Enter the docket number (P–14474) in the docket number field to access the document. For assistance, contact FERC Online Support.

Dated: April 26, 2013.

Kimberly D. Bose,

Secretary.

[FR Doc. 2013–10610 Filed 5–3–13; 8:45 am]

BILLING CODE 6717–01–P

DEPARTMENT OF ENERGY

Federal Energy Regulatory Commission

[Project No. 14473–000]

FFP Project 112, LLC; Notice of Preliminary Permit Application Accepted for Filing and Soliciting Comments, Motions To Intervene, and Competing Applications

On January 1, 2013, FFP Project 112, LLC filed an application for a preliminary permit, pursuant to section 4(f) of the Federal Power Act (FPA), proposing to study the feasibility of a hydropower project located at the U.S. Army Corps of Engineers' (Corps) Chouteau Lock and Dam, located on the Verdigris River near the town of Okay in Wagoner County, Oklahoma. The sole purpose of a preliminary permit, if issued, is to grant the permit holder priority to file a license application during the permit term. A preliminary permit does not authorize the permit holder to perform any land-disturbing activities or otherwise enter upon lands or waters owned by others without the owners' express permission.

The proposed project would consist of the following: (1) A 180-foot-long, 80-foot-wide intake channel with a 120-foot-long retaining wall; (2) a 130-foot-long, 90-foot-wide powerhouse, located on the east side of the dam, containing two generating units with a total capacity of 11.6 MW; (3) a 100-foot-long, 175-foot-wide tailrace with a 50-foot-long retaining wall; (4) a 4.16/69 kilo-Volt (kV) substation; and (5) a 0.3-mile-long, 69 kV transmission line. The proposed project would have an average annual generation of 36,900 megawatt-hours, and utilize surplus water from the Chouteau Lock and Dam, as directed by the Corps.

Applicant Contact: Ms. Ramya Swaminathan, Free Flow Power Corporation, 239 Causeway Street, Suite 300, Boston, MA 02114. (978) 283–2822.

FERC Contact: Chris Casey, *christiane.casey@ferc.gov,* (202) 502–8577.

Deadline for filing comments, motions to intervene, competing applications (without notices of intent), or notices of intent to file competing applications: 60 days from the issuance of this notice. Competing applications and notices of intent must meet the requirements of 18 CFR 4.36. Comments, motions to intervene, notices of intent, and competing applications may be filed electronically via the Internet. See 18 CFR 385.2001(a)(1)(iii) and the instructions on the Commission's Web site *http://www.ferc.gov/docs-filing/efiling.asp.* Commenters can submit brief comments up to 6,000 characters, without prior registration, using the eComment system at *http://www.ferc.gov/docs-filing/ecomment.asp.* You must include your name and contact information at the end of your comments. For assistance, please contact FERC Online Support at *FERCOnlineSupport@ferc.gov* or toll free at 1–866–208–3676, or for TTY, (202) 502–8659. Although the Commission strongly encourages electronic filing, documents may also be paper-filed. To paper-file, mail an original and five copies to: Kimberly D. Bose, Secretary, Federal Energy Regulatory Commission, 888 First Street NE., Washington, DC 20426.

More information about this project, including a copy of the application, can be viewed or printed on the ''eLibrary'' link of Commission's Web site at *http://www.ferc.gov/docs-filing/elibrary.asp.* Enter the docket number (P–14473) in the docket number field to access the document. For assistance, contact FERC Online Support.

Dated: April 26, 2013.

Kimberly D. Bose,

Secretary.

[FR Doc. 2013–10625 Filed 5–3–13; 8:45 am]

BILLING CODE 6717–01–P

DEPARTMENT OF ENERGY

Federal Energy Regulatory Commission

[Docket No. CP13–215–000]

Dominion Transmission Inc.; Prior Notice Activity Under Blanket Certificate

On April 19, 2013, Dominion Transmission Inc. (Dominion), filed a prior notice request pursuant to Sections 157.205 and 157.208 of the Commission's regulations under the Natural Gas Act, and Dominion's blanket certificate issued in Docket No. G–1391. Dominion seeks authorization to replace pipeline facilities constructed in the early 1950s, located in Westmoreland County, Pennsylvania. Upgraded facilities will comply with current federal pipeline safety standards.

Questions regarding this application may be directed to Brad Knisley, Regulatory and Certificates Analyst, Dominion Transmission, Inc., 701 East Cary Street, Richmond, VA 23219, or by calling 804 771–4412, by faxing 804 771–4804, or by emailing *Brad.A.Knisley@dom.com* .

Any person or the Commission's staff may, within 60 days after issuance of the instant notice by the Commission, file pursuant to Rule 214 of the Commission's Procedural Rules (18 CFR 385.214) a motion to intervene or notice of intervention and pursuant to Section 157.205 of the regulations under the NGA (18 CFR 157.205), a protest to the request. If no protest is filed within the time allowed therefore, the proposed activity shall be deemed to be authorized effective the day after the time allowed for filing a protest. If a protest is filed and not withdrawn within 30 days after the allowed time for filing a protest, the instant request shall be treated as an application for authorization pursuant to Section 7 of the NGA.

Protests will be considered by the Commission in determining the appropriate action to be taken, but will not serve to make protestants parties to the proceeding. Any person wishing to become a party must file a notice of intervention or motion to intervene, as appropriate. Such motions or protests must be filed on or before the comment date. Anyone filing a motion to

intervene or protest must serve a copy of that document on the Applicant. On or before the comment date, it is not necessary to serve motions to intervene or protests on persons other than the Applicant.

The Commission encourages electronic submission of protests and interventions in lieu of paper using the ''eFiling'' link at *http://www.ferc.gov.* Persons unable to file electronically should submit an original and seven copies of the protest or intervention to the Federal Energy Regulatory Commission, 888 First Street, NE., Washington, DC 20426.

This filing is accessible on-line at *http://www.ferc.gov,* using the ''eLibrary'' link and is available for review in the Commission's Public Reference Room in Washington, DC. There is an ''eSubscription'' link on the Web site that enables subscribers to receive email notification when a document is added to a subscribed docket(s). For assistance with any FERC Online service, please email *FERCOnlineSupport@ferc.gov,* or call (866) 208–3676 (toll free). For TTY, call (202) 502–8659.

Comment Date: 5:00 p.m. Eastern Time on June 28, 2013.

Dated: April 29, 2013.

Kimberly D. Bose,

Secretary.

[FR Doc. 2013–10621 Filed 5–3–13; 8:45 am]

BILLING CODE 6717–01–P

DEPARTMENT OF ENERGY

Federal Energy Regulatory Commission

[Project No. 2503–147—South Carolina and North Carolina]

Duke Energy Carolinas, LLC, Keowee-Toxaway Hydroelectric Project; Notice of Revised Restricted Service List for a Programmatic Agreement

Rule 2010 of the Federal Energy Regulatory Commission's (Commission) Rules of Practice and Procedure, 18 CFR 385.2010, provides that, to eliminate unnecessary expense or improve administrative efficiency, the Secretary may establish a restricted service list for a particular phase or issue in a proceeding. The restricted service list should contain the names of persons on the service list who, in the judgment of the decisional authority establishing the list, are active participants with respect to the phase or issue in the proceeding for which the list is established.

The Commission staff is consulting with the South Carolina State Historic Preservation Officer (SHPO), the North Carolina SHPO, and the Advisory Council on Historic Preservation (Advisory Council) pursuant to the Advisory Council's regulations, 36 CFR part 800, implementing section 106 of the National Historic Preservation Act, *as amended,* (16 U.S.C. section 470f), to prepare and execute a programmatic agreement for managing properties included in, or eligible for inclusion in, the National Register of Historic Places that could be affected by issuance of a new license for the Keowee-Toxaway Project No. 2503.

On August 11, 2011, Commission staff established a restricted service list for the Keowee-Toxaway Project. On April 24, 2013, the United Keetoowah Band of Cherokee Indians in Oklahoma requested to be added to the restricted service list. The restricted service list is supplemented to include:

''Lisa Baker, Acting THPO, or Representative, United Keetoowah Band of Cherokee Indians in Oklahoma, P.O. Box 746, Tahlequah, OK 74465.''

On April 26, 2013, the South Carolina Department of Archives & History requested a revision to the restricted service list. The restricted service list is revised as follows:

Replace ''Dr. Jodi Barnes'' and ''Rebekah Dobrasko'' with ''Elizabeth M. Johnson, Director, Historical Services, D–SHPO, South Carolina Department of Archives & History, 8301 Parklane Road, Columbia, SC 29223.''

Dated: April 29, 2013.

Kimberly D. Bose,

Secretary.

[FR Doc. 2013–10618 Filed 5–3–13; 8:45 am]

BILLING CODE 6717–01–P

DEPARTMENT OF ENERGY

Federal Energy Regulatory Commission

Notice of Commission Staff Attendance

The Federal Energy Regulatory Commission (Commission) hereby gives notice that members of the Commission's staff may attend the following meetings related to the transmission planning activities of ISO New England Inc., New York Independent System Operator, Inc., and PJM Interconnection, L.L.C.:

Joint Inter-Regional Planning Task Force/Electric System Planning Working Group

May 16, 2013, 10:00 a.m. to 4:00 p.m., Local Time

Electric System Planning Working Group

May 30, 2013, 10:00 a.m. to 4:00 p.m., Local Time

June 13, 2013, 10:00 a.m. to 4:00 p.m., Local Time

June 27, 2013, 10:00 a.m. to 4:00 p.m., Local Time

The above-referenced meeting is open to stakeholders and will be held at: NYISO's offices, Rensselaer, NY.

Further information may be found at *www.nyiso.com*

The discussions at the meetings described above may address matters at issue in the following proceedings:

Docket No. ER08–1281, *New York Independent System Operator, Inc.*
Docket No. EL05–121, *PJM Interconnection, L.L.C.*
Docket No. EL10–52, *Central Transmission, LLC* v. *PJM Interconnection, L.L.C.*
Docket No. ER10–253 and EL10–14, *Primary Power, L.L.C.*
Docket No. EL12–69, *Primary Power LLC* v. *PJM Interconnection, L.L.C.*
Docket No. ER11–1844, *Midwest Independent Transmission System Operator, Inc.*
Docket No. ER12–1178, *PJM Interconnection, L.L.C.*
Docket No. ER13–90, *Public Service Electric and Gas Company and PJM Interconnection, L.L.C.*
Docket No. ER13–102–000, *New York Independent System Operator, Inc.*
Docket No. ER13–193–000, *ISO New England Inc.*
Docket No. ER13–195, *Indicated PJM Transmission Owners*
Docket No. ER13–196–000, *ISO New England Inc.*
Docket No. ER13–198, *PJM Interconnection, L.L.C*
Docket No. ER13–397, *PJM Interconnection, L.L.C.*
Docket No. ER13–673, *PJM Interconnection, L.L.C*
Docket No. ER13–703, *PJM Interconnection, L.L.C.*
Docket No. ER13–887, *PJM Interconnection, L.L.C.*
Docket No. ER13–1052, *PJM Interconnection, L.L.C. and the Midwest Independent Transmission System Operator, Inc.*
Docket No. ER13–1054, *PJM Interconnection, L.L.C. and the Midwest Independent Transmission System Operator, Inc.*

For more information, contact James Eason, Office of Energy Market Regulation, Federal Energy Regulatory Commission at (202) 502–8622 or *James.Eason@ferc.gov.*

Dated: April 30, 2013.

Kimberly D. Bose,

Secretary.

[FR Doc. 2013–10638 Filed 5–3–13; 8:45 am]

BILLING CODE 6717–01–P

FARM CREDIT ADMINISTRATION

Farm Credit Administration Board; Sunshine Act Meetings

AGENCY: Farm Credit Administration.

SUMMARY: Notice is hereby given, pursuant to the Government in the Sunshine Act, of the regular meeting of the Farm Credit Administration Board (Board).

DATE AND TIME: The regular meeting of the Board will be held at the offices of the Farm Credit Administration in McLean, Virginia, on May 9, 2013, from 9:00 a.m. until such time as the Board concludes its business.

FOR FURTHER INFORMATION CONTACT: Dale L. Aultman, Secretary to the Farm Credit Administration Board, (703) 883–4009, TTY (703) 883–4056.

ADDRESSES: Farm Credit Administration, 1501 Farm Credit Drive, McLean, Virginia 22102–5090.

SUPPLEMENTARY INFORMATION: Parts of this meeting of the Board will be open to the public (limited space available) and parts will be closed to the public. In order to increase the accessibility to Board meetings, persons requiring assistance should make arrangements in advance. The matters to be considered at the meeting are:

Open Session

Approval of Minutes

- April 11, 2013

New Business

- Unincorporated Business Entities—Final Rule

Closed Session *

- Office of Secondary Market Oversight Quarterly Report

Dated: May 1, 2013.

Dale L. Aultman,

Secretary, Farm Credit Administration Board.

[FR Doc. 2013–10816 Filed 5–2–13; 4:15 pm]

BILLING CODE 6705–01–P

* Session Closed-Exempt pursuant to 5 U.S.C. 552b(c)(8) and (9).

FEDERAL COMMUNICATIONS COMMISSION

Information Collection Being Reviewed by the Federal Communications Commission for Extension Under Delegated Authority

AGENCY: Federal Communications Commission.

ACTION: Notice and request for comments.

SUMMARY: The Federal Communications Commission (FCC), as part of its continuing effort to reduce paperwork burdens, invites the general public and other Federal agencies to take this opportunity to comment on the following information collection, as required by the Paperwork Reduction Act (PRA) of 1995. Comments are requested concerning whether the proposed collection of information is necessary for the proper performance of the functions of the Commission, including whether the information shall have practical utility; the accuracy of the Commission's burden estimate; ways to enhance the quality, utility, and clarity of the information collected; ways to minimize the burden of the collection of information on the respondents, including the use of automated collection techniques or other forms of information technology; and ways to further reduce the information collection burden on small business concerns with fewer than 25 employees.

The FCC may not conduct or sponsor a collection of information unless it displays a currently valid control number. No person shall be subject to any penalty for failing to comply with a collection of information subject to the PRA that does not display a valid Office of Management and Budget (OMB) control number.

DATES: Written PRA comments should be submitted on or before July 5, 2013. If you anticipate that you will be submitting comments, but find it difficult to do so within the period of time allowed by this notice, you should advise the FCC contact listed below as soon as possible.

ADDRESSES: Direct all PRA comments to Cathy Williams, FCC, via email *PRA@fcc.gov* and to *Cathy.Williams@fcc.gov.*

FOR FURTHER INFORMATION CONTACT: For additional information about the information collection, contact Cathy Williams at (202) 418–2918.

SUPPLEMENTARY INFORMATION:

OMB Control Number: 3060–0967.

Title: Section 79.2, Accessibility of Programming Providing Emergency Information.

Form Number: N/A.

Type of Review: Extension of a currently approved collection.

Respondents: Business or other for-profit entities; individuals or households; not-for-profit institutions; and State, local, or tribal Governments.

Number of Respondents and Responses: 50 respondents; 50 responses.

Estimated Time per Response: 1 to 2 hours.

Frequency of Response: On occasion reporting requirement; Third party disclosure requirement.

Obligation to Respond: Required to obtain or retain benefits. The statutory authority for this information collection is contained in Sections 151, 152(a), 154(i), 154(j), 303, 307, 309, 310 and 613 of the Communications Act of 1934, as amended.

Total Annual Burden: 53 hours.

Total Annual Cost: $6,750.

Nature and Extent of Confidentiality: Confidentiality is an issue to the extent that individuals and households provide personally identifiable information, which is covered under the FCC's updated system of records notice (SORN), FCC/CGB–1, ''Informal Complaints and Inquiries'', which became effective on January 25, 2010. The Commission believes that it provides sufficient safeguards to protect the privacy of individuals who file complaints under 47 CFR 79.2(c).

Privacy Impact Assessment: The Privacy Impact Assessment (PIA) for Informal Complaints and Inquiries was completed on June 28, 2007. It may be reviewed at *http://www.fcc.gov/omd/privacyact/Privacy_Impact_Assessment.html.* The Commission is in the process of updating the PIA to incorporate various revisions to it as a result of revisions to the SORN.

Needs and Uses: 47 CFR 79.2 is designed to ensure that persons with hearing and visual disabilities have access to the critical details of emergency information. The Commission adopted the rules to assist persons with hearing disabilities on April 13, 2000, in the Second Report and Order in MM Docket No. 95–176. The Commission modified the rules to assist persons with visual disabilities on July 21, 2000, in the Report and Order in MM Docket No. 99–339.

47 CFR 79.2(c) requires that each complaint transmitted to the Commission include the following: The name of the video programming distributor at issue; the date and time of the omission of the emergency information; and the type of emergency. The Commission then notifies the video programming distributor, which must reply within 30 days.

Federal Communications Commission.

Marlene H. Dortch,

Secretary, Office of the Secretary, Office of Managing Director.

[FR Doc. 2013–10592 Filed 5–3–13; 8:45 am]

BILLING CODE 6712–01–P

FEDERAL COMMUNICATIONS COMMISSION

Information Collections Being Reviewed by the Federal Communications Commission Under Delegated Authority

AGENCY: Federal Communications Commission.

ACTION: Notice and request for comments.

SUMMARY: The Federal Communications Commission (FCC), as part of its continuing effort to reduce paperwork burdens, invites the general public and other Federal agencies to take this opportunity to comment on the following information collection, as required by the Paperwork Reduction Act (PRA) of 1995. Comments are requested concerning whether the proposed collection of information is necessary for the proper performance of the functions of the Commission, including whether the information shall have practical utility; the accuracy of the Commission's burden estimate; ways to enhance the quality, utility, and clarity of the information collected; ways to minimize the burden of the collection of information on the respondents, including the use of automated collection techniques or other forms of information technology; and ways to further reduce the information collection burden on small business concerns with fewer than 25 employees.

The FCC may not conduct or sponsor a collection of information unless it displays a currently valid control number. No person shall be subject to any penalty for failing to comply with a collection of information subject to the PRA that does not display a valid Office of Management and Budget (OMB) control number.

DATES: Written PRA comments should be submitted on or before July 5, 2013. If you anticipate that you will be submitting comments, but find it difficult to do so within the period of time allowed by this notice, you should advise the contact listed below as soon as possible.

ADDRESSES: Direct all PRA comments to Cathy Williams, FCC, via email *PRA@fcc.gov* and to *Cathy.Williams@fcc.gov.*

FOR FURTHER INFORMATION CONTACT: For additional information about the information collection, contact Cathy Williams at (202) 418–2918.

SUPPLEMENTARY INFORMATION:

OMB Control Number: 3060–0633.

Title: Sections 73.1230, 74.165, 74.432, 74.564, 74.664, 74.765, 74.832, 74.1265, Posting or Filing of Station Licenses.

Form Number: N/A.

Type of Review: Extension of a currently approved collection.

Respondents: Business or other for-profit entities, Not-for-profit institutions.

Number of Respondents and Responses: 2,584 respondents and 2,584 responses.

Estimated Hours per Response: 0.083 hours.

Frequency of Response: Recordkeeping requirement; Third party disclosure requirement; On occasion reporting requirement.

Obligation to Responds: Required to obtain or retain benefits. The statutory authority for this collection of information is contained in Section 154(i) of the Communications Act of 1934, as amended.

Total Annual Burden: 214 hours.

Total Annual Cost: $84,860.

Nature and Extent of Confidentiality: There is no need for confidentiality with this collection of information.

Privacy Impact Assessment: No impact(s).

Needs and Uses: 47 CFR 73.1230 requires that the station license and any other instrument of station authorization for an AM, FM or TV station be posted in a conspicuous place at the place the licensee considers to be the principal control point of the transmitter.

47 CFR 74.165 requires that the instrument of authorization for an experimental broadcast station be available at the transmitter site.

47 CFR 74.432(j) (remote pickup broadcast station) and 74.832(j) (low power auxiliary station) requires that the license of a remote pickup broadcast/low power auxiliary station shall be retained in the licensee's files, posted at the transmitter, or posted at the control point of the station. These sections also require the licensee to forward the station license to the FCC in the case of permanent discontinuance of the station.

47 CFR 74.564 (aural broadcast auxiliary stations) requires that the station license and any other instrument of authorization be posted in the room where the transmitter is located, or if operated by remote control, at the operating position.

47 CFR 74.664 (television broadcast auxiliary stations) requires that the station license and any other instrument of authorization be posted in the room where the transmitter is located.

Sections 74.765 (low power TV, TV translator and TV booster) and 74.1265 (FM translator stations and FM booster stations), require that the station license and any other instrument of authorization be retained in the station's files. In addition, the call sign of the station, together with the name, address and telephone number of the licensee or the local representative of the licensee, and the name and address of the person and place where the station records are maintained, shall be displayed at the transmitter site on the structure supporting the transmitting antenna.

OMB Control Number: 3060–0332.

Title: Section 76.614, Cable Television System Regular Monitoring, and Section 76.1706, Signal Leakage Logs and Repair Records.

Form Number: Not applicable.

Type of Review: Extension of a currently approved collection.

Respondents: Business or other for-profit entities.

Number of Respondents and Responses: 5,800 respondents and 4,062 responses.

Estimated Hours per Response: .0167–0.5 hours.

Frequency of Response: Recordkeeping requirement; On occasion reporting requirement.

Total Annual Burden: 4,062 hours.

Total Annual Cost: None.

Nature of Response: Required to obtain or retain benefits. The statutory authority for this collection is contained in Sections 302 and 303 of the Communications Act of 1934, as amended.

Nature and Extent of Confidentiality: There is no need for confidentiality with this collection of information.

Privacy Impact Assessment: No impact(s).

Needs and Uses: 47 CFR 76.1706 requires cable operators shall maintain a log showing the date and location of each leakage source identified pursuant to 47 CFR 76.614, the date on which the leakage was repaired, and the probable cause of the leakage. The log shall be kept on file for a period of two years and shall be made available to authorized representatives of the Commission upon request.

Federal Communications Commission.

Marlene H. Dortch,

Secretary, Office of the Secretary, Office of Managing Director.

[FR Doc. 2013–10594 Filed 5–3–13; 8:45 am]

BILLING CODE 6712–01–P

FEDERAL COMMUNICATIONS COMMISSION

Information Collections Being Submitted for Review and Approval to the Office of Management and Budget

AGENCY: Federal Communications Commission.

ACTION: Notice and request for comments.

SUMMARY: The Federal Communications Commission (FCC), as part of its continuing effort to reduce paperwork burdens, invites the general public and other Federal agencies to take this opportunity to comment on the following information collection, as required by the Paperwork Reduction Act (PRA) of 1995. An agency may not conduct or sponsor a collection of information unless it displays a currently valid control number. No person shall be subject to any penalty for failing to comply with a collection of information subject to the PRA that does not display a valid control number. Comments are requested concerning whether the proposed collection of information is necessary for the proper performance of the functions of the Commission, including whether the information shall have practical utility; the accuracy of the Commission's burden estimate; ways to enhance the quality, utility, and clarity of the information collected; ways to minimize the burden of the collection of information on the respondents, including the use of automated collection techniques or other forms of information technology; and ways to further reduce the information collection burden on small business concerns with fewer than 25 employees. The FCC may not conduct or sponsor a collection of information unless it displays a currently valid control number. No person shall be subject to any penalty for failing to comply with a collection of information subject to the PRA that does not display a valid Office of Management and Budget (OMB) control number.

DATES: Written comments should be submitted on or before June 5, 2013. If you anticipate that you will be submitting comments, but find it difficult to do so within the period of time allowed by this notice, you should advise the contacts below as soon as possible.

ADDRESSES: Direct all PRA comments to Nicholas A. Fraser, OMB, via fax 202–395–5167, or via email *Nicholas_A._Fraser@omb.eop.gov;* and to Cathy Williams, FCC, via email *PRA@fcc.gov* mailto:*PRA@fcc.gov* and to *Cathy.Williams@fcc.gov.* Include in the comments the OMB control number as shown in the ''Supplementary Information'' section below.

FOR FURTHER INFORMATION CONTACT: For additional information or copies of the information collection, contact Cathy Williams at (202) 418–2918. To view a copy of this information collection request (ICR) submitted to OMB: (1) Go to the Web page *http://www.reginfo.gov/public/do/PRAMain,* (2) look for the section of the Web page called ''Currently Under Review,'' (3) click on the downward-pointing arrow in the ''Select Agency'' box below the ''Currently Under Review'' heading, (4) select ''Federal Communications Commission'' from the list of agencies presented in the ''Select Agency'' box, (5) click the ''Submit'' button to the right of the ''Select Agency'' box, (6) when the list of FCC ICRs currently under review appears, look for the OMB control number of this ICR and then click on the ICR Reference Number. A copy of the FCC submission to OMB will be displayed.

SUPPLEMENTARY INFORMATION:

OMB Control Number: 3060–0937.

Title: Establishment of a Class A Television Service, MM Docket No. 00–10.

Form Number: Not applicable.

Type of Review: Extension of a currently approved collection.

Respondents: Business or other for-profit entities.

Frequency of Response: Recordkeeping requirement; Third party disclosure requirement; On occasion and quarterly reporting requirements.

Number of Respondents and Responses: 430 respondents; 10,850 responses.

Estimated Time per Response: 0.017 hours–52 hours.

Obligation to Respond: Required to obtain or retain benefits. The statutory authority for this collection of information is contained in Sections 154(i), 307, 308, 309 and 319 of the Communications Act of 1934, as amended.

Total Annual Burden: 202,133 hours.

Total Annual Cost: $1,911,000.

Privacy Impact Assessment: No impact(s).

Nature and Extent of Confidentiality: There is no need for confidentiality with this collection of information.

Needs and Uses: On November 29, 1999, the Community Broadcasters Protection Act of 1999 (CBPA), Public Law 106–113, 113 Stat. Appendix I at pp. 1501A–594–1501A–598 (1999), codified at 47 U.S.C. Section 336(f), was enacted. That legislation provided that a low power television (LPTV) licensee should be permitted to convert the secondary status of its station to the new Class A status, provided it can satisfy certain statutorily-established criteria. The CBPA directs that Class A licensees be subject to the same license terms and renewal standards as full-power television licenses and that Class A licensees be accorded primary status as television broadcasters as long as they continue to meet the requirements set forth in the statute for a qualifying low power station. The CBPA sets out certain certification and application procedures for LPTV licensees seeking Class A designation, prescribes the criteria LPTV licensees must meet to be eligible for Class A licenses, and outlines the interference protection Class A applicants must provide to analog, digital, LPTV and TV translator stations.

The CBPA directs that Class A stations must comply with the operating requirements for full-service television broadcast stations. Therefore, beginning on the date of its application for a Class A license and thereafter, a station must be ''in compliance'' with the Commission's operating rules for full-service television stations, contained in 47 CFR part 73.

OMB Control Number: 3060–0700.

Title: Open Video Systems Provisions, FCC Form 1275.

Form Number: FCC Form 1275.

Type of Review: Extension of a currently approved collection.

Respondents: Business or other for-profit entities; and State, Local or Tribal Government.

Number of Respondents and Responses: 280 respondents; 4,672 respondents.

Frequency of Response: Recordkeeping requirement; Third party disclosure requirement; On occasion reporting requirement.

Estimated Time per Response: 0.25 to 20 hours.

Total Annual Burden: 9,855 hours.

Total Annual Costs: None.

Privacy Impact Assessment: No impact(s).

Obligation to Respond: Required to obtain or retain benefits. The statutory authority for this collection is contained in Section 302 of the Communications Act of 1934, as amended.

Nature and Extent of Confidentiality: There is no need for confidentiality with this collection of information.

Needs and Uses: Section 302 of the 1996 Telecommunications Act provides for specific entry options for telephone companies wishing to enter the video programming marketplace, one option being to provide cable service over an

''open video system'' (''OVS''). The rule sections that are covered by this collection relate to OVS.

OMB Control Number: 3060–xxxx.

Title: Earth Stations Aboard Aircraft (ESAA).

Form Number: Not applicable.

Type of Review: New information collection.

Respondents: Businesses or other for-profit entities.

Number of Respondents and Responses: 6 respondents and 54 responses.

Estimated Time per Response: 1–4 hours.

Frequency of Response: On occasion reporting requirement; Third-party disclosure requirement.

Total Annual Burden: 114 hours.

Total Annual Costs: $16,200.

Nature and Extent of Confidentiality: There is no need for confidentiality with this collection of information.

Obligation to Respond: Required to obtain or retain benefits. The Commission has statutory authority for the information collection requirements under Sections 4(i), 4(j), 7(a), 302(a), 303(c), 303(e), 303(f), 303(g), 303(j), 303(r), and 303(y) of the Communications Act of 1934, as amended, 47 U.S.C. 154(i), 154(j), 157(a), 302(a), 303(c), 303(e), 303(f) 303(g), 303(j), 303(r), and 303(y).

Privacy Assessment: No impact(s).

Needs and Uses: The Federal Communications Commission (''Commission'') is seeking approval from the Office of Management and Budget (OMB) in order to establish a new information collection titled, ''Earth Stations Aboard Aircraft.''

On December 28, 2012, the Commission released a Notice of Proposed Rulemaking and Report and Order titled, ''Revisions to Parts 2 and 25 of the Commission's Rules to Govern the Use of Earth Stations Aboard Aircraft Communicating with Fixed-Satellite Service Geostationary-Orbit Space Stations Operating in the 10.95–11.2 GHz, 11.45–11.7 GHz, 11.7–12.2 GHz and 14.0–14.5 GHz Frequency Bands and Service Rules and Procedures to Govern the Use of Aeronautical Mobile Satellite Service Earth Stations in Frequency Bands Allocated to the Fixed Satellite Service,'' IB Docket Nos. 12–376 and 05–20, FCC 12–161 (''ESAA Report and Order'').

The Notice of Proposed Rulemaking portion of the rulemaking does not contain any new or modified information collection requirements. The new information collection requirements contained in the Report and Order are as follows:

47 CFR 25.132(b)(3)—Applicants seeking authority to use an antenna that does not meet the standards set forth in §§ 25.209(a) and (b), pursuant to the procedure set forth in § 25.220, § 25.221, § 25.222, § 25.223, § 25.226 or § 25.227 of this part, are required to submit a copy of the manufacturer's range test plots of the antenna gain patterns specified in paragraph (b)(1) of this section.

47 CFR 25.227(b)—Applications for ESAA operation in the 14.0–14.5 GHz (Earth-to-space) band to GSO satellites in the Fixed-Satellite Service shall include, in addition to the particulars of operation identified on Form 312, and associated Schedule B, the applicable technical demonstrations in paragraphs (b)(1), (b)(2) or (b)(3) and the documentation identified in paragraphs (b)(4) through (b)(8) of this section.

(1) An ESAA applicant proposing to implement a transmitter under paragraph (a)(1) of this section shall demonstrate that the transmitter meets the off-axis EIRP spectral-density limits contained in paragraph (a)(1)(i) of this section. To provide this demonstration, the application shall include the tables described in paragraph (b)(1)(i) of this section or the certification described in paragraph (b)(1)(ii) of this section. The ESAA applicant also shall provide the value N described in paragraph (a)(1)(i)(A) of this section. An ESAA applicant proposing to implement a transmitter under paragraph (a)(1)(ii)(A) of this section shall provide the certifications identified in paragraph (b)(1)(iii) of this section. An ESAA applicant proposing to implement a transmitter under paragraph (a)(1)(ii)(B) of this section shall provide the demonstrations identified in paragraph (b)(1)(iv) of this section.

(i) Any ESAA applicant filing an application pursuant to paragraph (a)(1) of this section shall file three tables and/or graphs depicting off-axis EIRP density masks defined by 25.227(a) and measured off-axis EIRP density levels of the proposed earth station antenna in the direction of the plane of the GSO; the co-polarized EIRP density in the elevation plane, that is, the plane perpendicular to the plane of the GSO; and cross-polarized EIRP density. Each table shall provide the EIRP density level at increments of 0.1° for angles between 0° and 10° off-axis, and at increments of 5° for angles between 10° and 180° off-axis.

(A) For purposes of the off-axis EIRP density table in the plane of the GSO, the off-axis angle is the angle in degrees from the line connecting the focal point of the antenna to the orbital location of the target satellite, and the plane of the GSO is determined by the focal point of the antenna and the line tangent to the arc of the GSO at the orbital position of the target satellite.

(B) For purposes of the off-axis co-polarized EIRP density table in the elevation plane, the off-axis angle is the angle in degrees from the line connecting the focal point of the antenna to the orbital location of the target satellite, and the elevation plane is defined as the plane perpendicular to the plane of the GSO defined in paragraph (b)(1)(i)(A) of this section.

(C) For purposes of the cross-polarized EIRP density table, the off-axis angle is the angle in degrees from the line connecting the focal point of the antenna to the orbital location of the target satellite and the plane of the GSO as defined in paragraph (b)(1)(i)(A) of this section will be used.

(ii) An ESAA applicant shall include a certification, in Schedule B, that the ESAA antenna conforms to the gain pattern criteria of § 25.209(a) and (b), that, combined with the maximum input power density calculated from the EIRP density less the antenna gain, which is entered in Schedule B, demonstrates that the off-axis EIRP spectral density envelope set forth in paragraphs (a)(1)(i)(A) through (a)(1)(i)(C) of this section will be met under the assumption that the antenna is pointed at the target satellite.

(iii) An ESAA applicant proposing to implement a transmitter under paragraphs (a)(1)(ii)(A) of this section shall:

(A) Demonstrate that the total tracking error budget of their antenna is within 0.2° or less between the orbital location of the target satellite and the axis of the main lobe of the ESAA antenna. As part of the engineering analysis, the ESAA applicant must show that the antenna pointing error is within three sigma ([bcy]) from the mean value; and

(B) Demonstrate that the antenna tracking system is capable of ceasing emissions within 100 milliseconds if the angle between the orbital location of the target satellite and the axis of the main lobe of the ESAA antenna exceeds 0.5°.

(iv) An ESAA applicant proposing to implement a transmitter under paragraph (a)(1)(ii)(B) of this section shall:

(A) Declare, in its application, a maximum antenna pointing error and demonstrate that the maximum antenna pointing error can be achieved without exceeding the off-axis EIRP spectral-density limits in paragraph (a)(1)(i) of this section; and

(B) Demonstrate that the ESAA transmitter can detect if the transmitter exceeds the declared maximum antenna

pointing error and can cease transmission within 100 milliseconds if the angle between the orbital location of the target satellite and the axis of the main lobe of the ESAA antenna exceeds the declared maximum antenna pointing error, and will not resume transmissions until the angle between the orbital location of the target satellite and the axis of the main lobe of the ESAA antenna is less than or equal to the declared maximum antenna pointing error.

(2) An ESAA applicant proposing to implement a transmitter under paragraph (a)(2) of this section and using off-axis EIRP spectral-densities in excess of the levels in paragraph (a)(1)(i) of this section shall provide the following certifications and demonstration as exhibits to its earth station application:

(i) A statement from the target satellite operator certifying that the proposed operation of the ESAA has the potential to receive harmful interference from adjacent satellite networks that may be unacceptable.

(ii) A statement from the target satellite operator certifying that the power density levels that the ESAA applicant provided to the target satellite operator are consistent with the existing coordination agreements between its satellite(s) and the adjacent satellite systems within 6° of orbital separation from its satellite(s).

(iii) A statement from the target satellite operator certifying that it will include the power-density levels of the ESAA applicant in all future coordination agreements.

(iv) A demonstration from the ESAA operator that the ESAA system will comply with all coordination agreements reached by the satellite operator and is capable of detecting and automatically ceasing emissions within 100 milliseconds when the transmitter exceeds the off-axis EIRP spectral-densities supplied to the target satellite operator.

(3) An ESAA applicant proposing to implement an ESAA system under paragraph (a)(3) of this section and using variable power-density control of individual simultaneously transmitting co-frequency ESAA earth stations in the same satellite receiving beam shall provide the following certifications and demonstration as exhibits to its earth station application:

(i) The applicant shall make a detailed showing of the measures it intends to employ to maintain the effective aggregate EIRP density from all simultaneously transmitting co-frequency terminals operating with the same satellite transponder at least 1 dB below the off-axis EIRP density limits defined in paragraphs (a)(1)(i)(A)–(C) of this section. In this context the term ''effective'' means that the resultant co-polarized and cross-polarized EIRP density experienced by any GSO or non-GSO satellite shall not exceed that produced by a single ESAA transmitter operating at 1 dB below the limits defined in paragraphs (a)(1)(i)(A)–(C) of this section. The applicant also must demonstrate that an individual transmitter and the entire ESAA system is capable of automatically ceasing emissions within 100 milliseconds if the aggregate off-axis EIRP-densities exceed the off-axis EIRP density limits minus 1 dB, as set forth in paragraph (a)(3)(i) of this section. The International Bureau will place this showing on public notice along with the application.

(ii) An applicant proposing to implement an ESAA system under paragraph (a)(3)(ii) of this section that uses off-axis EIRP spectral-densities in excess of the levels in paragraph (a)(3)(i) of this section shall provide the following certifications, demonstration and list of satellites as exhibits to its earth station application:

(A) A detailed showing of the measures the applicant intends to employ to maintain the effective aggregate EIRP density from all simultaneously transmitting co-frequency terminals operating with the same satellite transponder at the EIRP density limits supplied to the target satellite operator. The International Bureau will place this showing on Public Notice along with the application.

(B) A statement from the target satellite operator certifying that the proposed operation of the ESAA has the potential to create harmful interference to satellite networks adjacent to the target satellite(s) that may be unacceptable.

(C) A statement from the target satellite operator certifying that the aggregate power-density levels that the ESAA applicant provided to the target satellite operator are consistent with the existing coordination agreements between its satellite(s) and the adjacent satellite systems within 6° of orbital separation from its satellite(s).

(D) A statement from the target satellite operator certifying that it will include the aggregate power-density levels of the ESAA applicant in all future coordination agreements.

(E) A demonstration from the ESAA operator that the ESAA system is capable of detecting and automatically ceasing emissions within 100 milliseconds when an individual transmitter exceeds the off-axis EIRP spectral-densities supplied to the target satellite operator and that the overall system is capable of shutting off an individual transmitter or the entire system if the aggregate off-axis EIRP spectral-densities exceed those supplied to the target satellite operator.

(F) An identification of the specific satellite or satellites with which the ESAA system will operate.

(4) There shall be an exhibit included with the application describing the geographic area(s) in which the ESAA will operate.

(5) Any ESAA applicant filing for an ESAA terminal or system and planning to use a contention protocol shall include in its application a certification that will comply with the requirements of paragraph (a)(4) of this section.

(6) The point of contact referred to in paragraph (a)(5) of this section shall be included in the application.

(7) Any ESAA applicant filing for an ESAA terminal or system shall include in its application a certification that will comply with the requirements of paragraph (a)(6), (a)(9), (a)(10), (a)(11) of this section.

(8) All ESAA applicants shall submit a radio frequency hazard analysis determining via calculation, simulation, or field measurement whether ESAA terminals, or classes of terminals, will produce power densities that will exceed the Commission's radio frequency exposure criteria. ESAA applicants with ESAA terminals that will exceed the guidelines in Section 1.1310 for radio frequency radiation exposure shall provide, with their environmental assessment, a plan for mitigation of radiation exposure to the extent required to meet those guidelines. All ESAA licensees shall ensure installation of ESAA terminals on aircraft by qualified installers who have an understanding of the antenna's radiation environment and the measures best suited to maximize protection of the general public and persons operating the vehicle and equipment. An ESAA terminal exhibiting radiation exposure levels exceeding 1.0 mW/cm[FN2] in accessible areas, such as at the exterior surface of the radome, shall have a label attached to the surface of the terminal warning about the radiation hazard and shall include thereon a diagram showing the regions around the terminal where the radiation levels could exceed 1.0 mW/cm[FN2].

47 CFR 25.227(c)(1)—Operations of ESAAs in the 14.0–14.2 GHz (Earth-to-space) frequency band in the radio line-of-sight of the NASA TDRSS facilities on Guam (latitude 13°36′55″ N, longitude 144°51′22″ E) or White Sands, New Mexico (latitude 32°20′59″ N,

longitude 106°36′31″ W and latitude 32°32′40″ N, longitude 106°36′48″ W) are subject to coordination with the National Aeronautics and Space Administration (NASA) through the National Telecommunications and Information Administration (NTIA) Interdepartment Radio Advisory Committee (IRAC). Licensees shall notify the International Bureau once they have completed coordination. Upon receipt of such notification from a licensee, the International Bureau will issue a public notice stating that the licensee may commence operations within the coordination zone in 30 days if no party has opposed the operations.

47 CFR 25.227(c)(2)—When NTIA seeks to provide similar protection to future TDRSS sites that have been coordinated through the IRAC Frequency Assignment Subcommittee process, NTIA will notify the Commission's International Bureau that the site is nearing operational status. Upon public notice from the International Bureau, all Ku-band ESAA licensees shall cease operations in the 14.0–14.2 GHz band within radio line-of-sight of the new TDRSS site until the licensees complete coordination with NTIA/IRAC for the new TDRSS facility. Licensees shall notify the International Bureau once they have completed coordination for the new TDRSS site. Upon receipt of such notification from a licensee, the International Bureau will issue a public notice stating that the licensee may commence operations within the coordination zone in 30 days if no party has opposed the operations. The ESAA licensee then will be permitted to commence operations in the 14.0–14.2 GHz band within radio line-of-sight of the new TDRSS site, subject to any operational constraints developed in the coordination process.

47 CFR 25.227(d)(1)—Operations of ESAA in the 14.47–14.5 GHz (Earth-to-space) frequency band in the radio line-of-sight of radio astronomy service (RAS) observatories observing in the 14.47–14.5 GHz band are subject to coordination with the National Science Foundation (NSF). The appropriate NSF contact point to initiate coordination is Electromagnetic Spectrum Manager, NSF, 4201 Wilson Blvd., Suite 1045, Arlington, VA 22203, fax 703–292–9034, email *esm@nsf.gov.* Licensees shall notify the International Bureau once they have completed coordination. Upon receipt of the coordination agreement from a licensee, the International Bureau will issue a public notice stating that the licensee may commence operations within the coordination zone in 30 days if no party has opposed the operations.

47 CFR 25.227(d)(2)—A list of applicable RAS sites and their locations can be found in 25.226(d)(2) Table 1.

47 CFR 25.227(d)(3)—When NTIA seeks to provide similar protection to future RAS sites that have been coordinated through the IRAC Frequency Assignment Subcommittee process, NTIA will notify the Commission's International Bureau that the site is nearing operational status. Upon public notice from the International Bureau, all Ku-band ESAA licensees shall cease operations in the 14.47–14.5 GHz band within the relevant geographic zone of the new RAS site until the licensees complete coordination for the new RAS facility. Licensees shall notify the International Bureau once they have completed coordination for the new RAS site and shall submit the coordination agreement to the Commission. Upon receipt of such notification from a licensee, the International Bureau will issue a public notice stating that the licensee may commence operations within the coordination zone in 30 days if no party has opposed the operations. The ESAA licensee then will be permitted to commence operations in the 14.47–14.5 GHz band within the relevant coordination distance around the new RAS site, subject to any operational constraints developed in the coordination process.

If various data in this collection were not filed in conjunction with our rules, then applicants and licensees would not obtain the authorization necessary to provide telecommunications services; the Commission would not be able to carry out its mandate as required by statute; and applicants and licensees would not be able to effectively provide services to the public.

Federal Communications Commission.

Marlene H. Dortch,

Secretary, Office of the Secretary, Office of Managing Director.

[FR Doc. 2013–10596 Filed 5–3–13; 8:45 am]

BILLING CODE 6712–01–P

FEDERAL COMMUNICATIONS COMMISSION

Information Collections Being Reviewed by the Federal Communications Commission

AGENCY: Federal Communications Commission.

ACTION: Notice and request for comments.

SUMMARY: The Federal Communications Commission (FCC), as part of its continuing effort to reduce paperwork burdens, invites the general public and other Federal agencies to take this opportunity to comment on the following information collection, as required by the Paperwork Reduction Act (PRA) of 1995. Comments are requested concerning whether the proposed collection of information is necessary for the proper performance of the functions of the Commission, including whether the information shall have practical utility; the accuracy of the Commission's burden estimate; ways to enhance the quality, utility, and clarity of the information collected; ways to minimize the burden of the collection of information on the respondents, including the use of automated collection techniques or other forms of information technology; and ways to further reduce the information collection burden on small business concerns with fewer than 25 employees.

The FCC may not conduct or sponsor a collection of information unless it displays a currently valid control number. No person shall be subject to any penalty for failing to comply with a collection of information subject to the PRA that does not display a valid Office of Management and Budget (OMB) control number.

DATES: Written PRA comments should be submitted on or before July 5, 2013. If you anticipate that you will be submitting comments, but find it difficult to do so within the period of time allowed by this notice, you should advise the contact listed below as soon as possible.

ADDRESSES: Direct all PRA comments to Cathy Williams, FCC, via email *PRA@fcc.gov* and to *Cathy.Williams@fcc.gov.*

FOR FURTHER INFORMATION CONTACT: For additional information about the information collection, contact Cathy Williams at (202) 418–2918.

SUPPLEMENTARY INFORMATION:

OMB Control Number: 3060–0179.

Title: Section 73.1590, Equipment Performance Measurements.

Form Number: N/A.

Type of Review: Extension of a currently approved collection.

Respondents: Business or other for-profit entities; Not-for-profit institutions.

Number of Respondents: 13,049.

Estimated Time per Response: 0.5–18 hours.

Frequency of Response: Recordkeeping requirement.

Total Annual Burden: 12,335 hours.

Total Annual Cost: None

Obligation to Respond: Required to obtain or retain benefits. The statutory

authority for this collection is contained in Section 154(i) of the Communications Act of 1934, as amended.

Nature and Extent of Confidentiality: There is no need for confidentiality with this collection of information.

Privacy Impact Assessment: No impact(s).

Needs and Uses: 47 CFR 73.1590(d) requires licensees of AM, FM and TV stations to make audio and video equipment performance measurements for each main transmitter. These measurements and a description of the equipment and procedures used in making the measurements must be kept on file at the transmitter or remote control point for two years. In addition, this information must be made available to the FCC upon request.

OMB Control Number: 3060–0500.

Title: Section 76.1713, Resolution of Complaints.

Form Number: N/A.

Type of Review: Extension of a currently approved collection.

Respondents: Business or other for-profit entities.

Number of Respondents and Responses: 10,750 respondents and 21,500 responses.

Estimated Hours per Response: 1–17 hours

Frequency of Response: Recordkeeping and third party disclosure requirements; Annual reporting requirement.

Total Annual Burden: 193,500 hours.

Total Annual Cost: None.

Obligation to Respond: Required to obtain or retain benefits. The statutory authority for this collection is contained in Sections 4(i), 303 and 308 of the Communications Act of 1934, as amended.

Nature and Extent of Confidentiality: There is no need for confidentiality with this collection of information.

Privacy Impact Assessment: No impact(s).

Needs and Uses: 47 CFR 76.1713 states cable system operators shall establish a process for resolving complaints from subscribers about the quality of the television signal delivered. Aggregate data based upon these complaints shall be made available for inspection by the Commission and franchising authorities, upon request. These records shall be maintained for at least a one-year period. Prior to being referred to the Commission, complaints from subscribers about the quality of the television signal delivered must be referred to the local franchising authority and the cable system operator.

Federal Communications Commission.

Marlene H. Dortch,

Secretary, Office of the Secretary, Office of Managing Director.

[FR Doc. 2013–10593 Filed 5–3–13; 8:45 am]

BILLING CODE 6712–01–P

FEDERAL ELECTION COMMISSION

Sunshine Act Meetings

AGENCY: Federal Election Commission.

Federal Register Citation of Previous Announcment—78 FR 25740 (May 2, 2013)

DATE & TIME: *Tuesday, May 7, 2013 at 10:00 A.M.*

PLACE: 999 E Street NW., Washington, DC.

STATUS: This meeting will be closed to the public.

CHANGES IN THE MEETING: The May 7, 2013 meeting will be continued on Thursday, May 9, 2013 after the conclusion of the open meeting.

PERSON TO CONTACT FOR INFORMATION: Judith Ingram, Press Officer. Telephone: (202) 694–1220.

Shelley E. Garr,

Deputy Secretary of the Commission.

[FR Doc. 2013–10756 Filed 5–2–13; 11:15 am]

BILLING CODE 6715–01–P

FEDERAL ELECTION COMMISSION

Sunshine Act Meetings

AGENCY: Federal Election Commission.

DATE & TIME: Thursday, May 9, 2013 at 10:00 a.m.

PLACE: 999 E Street NW., Washington, DC (Ninth Floor).

STATUS: This meeting will be open to the public.

Items To Be Discussed

Correction and Approval of the Minutes for the Meeting of April 25, 2013

Draft Advisory Opinion 2013–01: 1787 National Committee, Inc.

Management and Administrative Matters

Individuals who plan to attend and require special assistance, such as sign language interpretation or other reasonable accommodations, should contact Shawn Woodhead Werth, Secretary and Clerk, at (202) 694–1040, at least 72 hours prior to the meeting date.

PERSON TO CONTACT FOR INFORMATION: Judith Ingram, Press Officer, Telephone: (202) 694–1220.

Signed:

Shawn Woodhead Werth,

Secretary and Clerk of the Commission.

[FR Doc. 2013–10818 Filed 5–2–13; 4:15 pm]

BILLING CODE 6715–01–P

FEDERAL RESERVE SYSTEM

Change in Bank Control Notices; Acquisitions of Shares of a Bank or Bank Holding Company

The notificants listed below have applied under the Change in Bank Control Act (12 U.S.C. 1817(j)) and § 225.41 of the Board's Regulation Y (12 CFR 225.41) to acquire shares of a bank or bank holding company. The factors that are considered in acting on the notices are set forth in paragraph 7 of the Act (12 U.S.C. 1817(j)(7)).

The notices are available for immediate inspection at the Federal Reserve Bank indicated. The notices also will be available for inspection at the offices of the Board of Governors. Interested persons may express their views in writing to the Reserve Bank indicated for that notice or to the offices of the Board of Governors. Comments must be received not later than May 21, 2013.

A. Federal Reserve Bank of Kansas City (Dennis Denney, Assistant Vice President) 1 Memorial Drive, Kansas City, Missouri 64198–0001:

1. *Aaron W. Anderson, Topeka, Kansas; Angela Anderson Swift, Overland Park, Kansas; Emery Kent Fager, Olathe, Kansas; John Fontron Fager, Auburn, Kansas; and Melissa Fager Hiestand, Topeka, Kansas; in their individual capacities, as fiduciaries and/or as grantors or trustees of the following trusts: Aaron W. Anderson Trust; Angela Anderson Swift Trust; Emery Kent Fager Trust; John Fontron Fager Trust; Melissa Fager Hiestand Trust; Adam William Anderson Trust; Joshua Robert Anderson Trust; Sydney Ellen Anderson Trust; Andrew Timothy Swift Trust; Sarah Ann Swift Trust; Samuel James Swift Trust; Amelia Lynn Fager Trust; Greysen Hartline Fager Trust; Holden Emery Fager Trust; Jackson Duane Fager Trust; Gabrielle Elizabeth Fager Trust; Kaitlin Elizabeth Hiestand Trust; Ella Claire Hiestand Trust and Blake Michael Hiestand Trust; and the Emery E. Fager Trust; the Duane Fager Special Trust; and the Jane Anderson Trust, all as members of the Fager Family Group;* to retain voting shares of Commerce Bank and Trust Holding Company, and thereby indirectly retain voting shares of CoreFirst Bank & Trust, both in Topeka, Kansas.

2. *Robert V. Haderlein,* Girard, Kansas; to retain voting shares of Mid-America Bancshares, Inc., and thereby indirectly retain voting shares of First National Bank of Girard, both in Girard, Kansas.

Board of Governors of the Federal Reserve System, May 1, 2013.

Michael J. Lewandowski,

Assistant Secretary of the Board.

[FR Doc. 2013–10671 Filed 5–3–13; 8:45 am]

BILLING CODE 6210–01–P

FEDERAL RESERVE SYSTEM

Formations of, Acquisitions by, and Mergers of Bank Holding Companies

The companies listed in this notice have applied to the Board for approval, pursuant to the Bank Holding Company Act of 1956 (12 U.S.C. 1841 *et seq.*) (BHC Act), Regulation Y (12 CFR part 225), and all other applicable statutes and regulations to become a bank holding company and/or to acquire the assets or the ownership of, control of, or the power to vote shares of a bank or bank holding company and all of the banks and nonbanking companies owned by the bank holding company, including the companies listed below.

The applications listed below, as well as other related filings required by the Board, are available for immediate inspection at the Federal Reserve Bank indicated. The applications will also be available for inspection at the offices of the Board of Governors. Interested persons may express their views in writing on the standards enumerated in the BHC Act (12 U.S.C. 1842(c)). If the proposal also involves the acquisition of a nonbanking company, the review also includes whether the acquisition of the nonbanking company complies with the standards in section 4 of the BHC Act (12 U.S.C. 1843). Unless otherwise noted, nonbanking activities will be conducted throughout the United States.

Unless otherwise noted, comments regarding each of these applications must be received at the Reserve Bank indicated or the offices of the Board of Governors not later than May 31, 2013.

A. Federal Reserve Bank of San Francisco (Gerald C. Tsai, Director, Applications and Enforcement) 101 Market Street, San Francisco, California 94105–1579:

1. *Washington Federal, Inc.,* Seattle, Washington; to become a bank holding company through the conversion of Washington Federal, Seattle, Washington, from a federal savings bank to a national bank.

Board of Governors of the Federal Reserve System, May 1, 2013.

Michael J. Lewandowski,

Assistant Secretary of the Board.

[FR Doc. 2013–10673 Filed 5–3–13; 8:45 am]

BILLING CODE 6210–01–P

FEDERAL RESERVE SYSTEM

Formations of, Acquisitions by, and Mergers of Savings and Loan Holding Companies

The companies listed in this notice have applied to the Board for approval, pursuant to the Home Owners' Loan Act (12 U.S.C. 1461 *et seq.*) (HOLA), Regulation LL (12 CFR part 238), and Regulation MM (12 CFR part 239), and all other applicable statutes and regulations to become a savings and loan holding company and/or to acquire the assets or the ownership of, control of, or the power to vote shares of a savings association and nonbanking companies owned by the savings and loan holding company, including the companies listed below.

The applications listed below, as well as other related filings required by the Board, are available for immediate inspection at the Federal Reserve Bank indicated. The application also will be available for inspection at the offices of the Board of Governors. Interested persons may express their views in writing on the standards enumerated in the HOLA (12 U.S.C. 1467a(e)). If the proposal also involves the acquisition of a nonbanking company, the review also includes whether the acquisition of the nonbanking company complies with the standards in section 10(c)(4)(B) of the HOLA (12 U.S.C. 1467a(c)(4)(B)). Unless otherwise noted, nonbanking activities will be conducted throughout the United States.

Unless otherwise noted, comments regarding each of these applications must be received at the Reserve Bank indicated or the offices of the Board of Governors not later than May 31, 2013.

A. Federal Reserve Bank of Chicago (Colette A. Fried, Assistant Vice President) 230 South LaSalle Street, Chicago, Illinois 60690–1414:

1. *WCF Financial, M.H.C. and Webster City Federal Bancorp,* both in Webster City, Iowa; to acquire through merger, Independence Federal Bank for Savings, Independence, Iowa.

Board of Governors of the Federal Reserve System, May 1, 2013.

Michael J. Lewandowski,

Assistant Secretary of the Board.

[FR Doc. 2013–10670 Filed 5–3–13; 8:45 am]

BILLING CODE 6210–01–P

FEDERAL RESERVE SYSTEM

Notice of Proposals To Engage in or To Acquire Companies Engaged in Permissible Nonbanking Activities

The companies listed in this notice have given notice under section 4 of the Bank Holding Company Act (12 U.S.C. 1843) (BHC Act) and Regulation Y, (12 CFR part 225) to engage *de novo,* or to acquire or control voting securities or assets of a company, including the companies listed below, that engages either directly or through a subsidiary or other company, in a nonbanking activity that is listed in § 225.28 of Regulation Y (12 CFR 225.28) or that the Board has determined by Order to be closely related to banking and permissible for bank holding companies. Unless otherwise noted, these activities will be conducted throughout the United States.

Each notice is available for inspection at the Federal Reserve Bank indicated. The notice also will be available for inspection at the offices of the Board of Governors. Interested persons may express their views in writing on the question whether the proposal complies with the standards of section 4 of the BHC Act.

Unless otherwise noted, comments regarding the applications must be received at the Reserve Bank indicated or the offices of the Board of Governors not later than May 21, 2013.

A. Federal Reserve Bank of Dallas (E. Ann Worthy, Vice President) 2200 North Pearl Street, Dallas, Texas 75201–2272:

1. Strategic Growth Bank Incorporated, and Strategic Growth Bancorp Incorporated, both in El Paso, Texas; to acquire 100 percent of the voting shares of Marsh Associates, Inc., Charlotte, North Carolina, and thereby engage in making, acquiring, brokering or servicing mortgage loans or other extensions of credit; acting as agent for the private placement of securities; and engaging under contract with a third party in asset management, servicing, and collection of assets, pursuant to sections 225.28(b)(1), (b)(2)(vi), and (b)(7)(iii), respectively.

Board of Governors of the Federal Reserve System, May 1, 2013.

Michael J. Lewandowski,

Assistant Secretary of the Board.

[FR Doc. 2013–10672 Filed 5–3–13; 8:45 am]

BILLING CODE 6210–01–P

DEPARTMENT OF HEALTH AND HUMAN SERVICES

Meeting of the President's Council on Fitness, Sports, and Nutrition; Correction

AGENCY: Department of Health and Human Services, Office of the Secretary, Office of the Assistant Secretary for Health, Office of the President's Council on Fitness, Sports, and Nutrition.

ACTION: Notice; correction.

SUMMARY: The Department of Health and Human Services published a notice in the **Federal Register** on April 11, 2013 to announce a meeting of the President's Council on Fitness, Sports, and Nutrition on May 7, 2013, from 10:00 a.m. to 4:30 p.m., at the Department of Health and Human Services, 200 Independence Ave., SW., Room 800; Washington, DC 20201. The meeting time has changed.

FOR FURTHER INFORMATION CONTACT: Ms. Shellie Pfohl, Executive Director, President's Council on Fitness, Sports, and Nutrition; Phone: (240) 276–9866 or (240) 276–9567.

Correction

In the **Federal Register** of April 11, 2013, FR Doc. 2013–08494 , on page 21606, in the second column, correct the **DATES** caption to read:

DATES: The meeting will be held on May 7, 2013, from 9:30 a.m. to 1:00 p.m.

Dated: April 26, 2013.

M. Shannon Feaster,

Director of Communications, President's Council on Fitness, Sports, and Nutrition.

[FR Doc. 2013–10674 Filed 5–3–13; 8:45 am]

BILLING CODE 4150–35–P

DEPARTMENT OF HEALTH AND HUMAN SERVICES

Centers for Medicare & Medicaid Services

[Document Identifiers: CMS–10419]

Agency Information Collection Activities: Submission for OMB Review; Comment Request

AGENCY: Centers for Medicare & Medicaid Services, HHS.

In compliance with the requirement of section 3506(c)(2)(A) of the Paperwork Reduction Act of 1995, the Centers for Medicare & Medicaid Services (CMS), Department of Health and Human Services, is publishing the following summary of proposed collections for public comment. Interested persons are invited to send comments regarding this burden estimate or any other aspect of this collection of information, including any of the following subjects: (1) The necessity and utility of the proposed information collection for the proper performance of the Agency's function; (2) the accuracy of the estimated burden; (3) ways to enhance the quality, utility, and clarity of the information to be collected; and (4) the use of automated collection techniques or other forms of information technology to minimize the information collection burden.

1. *Type of Information Collection Request:* New collection (request for a new OMB control number); *Title of Information Collection:* Transparency Reports and Reporting of Physician Ownership or Investment Interests; *Use:*

Reports of Payments or Other Transfers of Value to Covered Recipients

The regulations at 42 CFR 403.904 require direct and indirect payments or other transfers of value provided by an applicable manufacturer to a covered recipient, and that direct and indirect payments or other transfers of value provided to a third party at the request of (or designated by) the applicable manufacturer on behalf of a covered recipient, be reported by the applicable manufacturer to CMS on an annual basis.

Reports of Physician Ownership and Investment Interests

Under § 403.906, each applicable manufacturer and applicable group purchasing organization must report to CMS on an annual basis all ownership and investment interests in the applicable manufacturer or applicable group purchasing organization that were held by a physician or an immediate family member of a physician during the preceding calendar year.

Data Collection

The data templates will provide detailed information about the data to be collected including the data element name, format, allowable values, required versus optional fields, and other associated rules intended to aid the applicable manufacturers and applicable group purchasing organizations as they prepare for and participate in data collection. Applicable manufacturers and applicable GPOs will engage in data collection external to CMS within their own systems or tracking tools. If we intend to make changes to the data templates, we will provide them at least 90 days prior to first day of data collection for the next reporting year. In providing revised templates, we will also comply with the requirements of the Paperwork Reduction Act to seek public comments on the proposed changes to the information collections, as required by law. This will allow applicable manufacturers and applicable GPOs to make any necessary changes to prepare for the next reporting year. This is the same time as the date by which we will publish the list of teaching hospitals.

Data Submission

Section 403.908 requires that reports must be electronically submitted to CMS by March 31, 2014, and by the 90th day of each subsequent calendar year. Additionally, applicable manufacturers and applicable group purchasing organizations may submit an entirely optional assumptions document, explaining the reasonable assumptions made and methodologies used when reporting payments or other transfers of value, or ownership or investment interests. The assumptions documents will not be made available to covered recipients, physician owners or investors, or the public.

Dispute Resolution and Corrections

There are several situations which may necessitate that data previously submitted be updated. These cases include corrections based on disputes, or corrections known by the applicable manufacturer or applicable GPO through another mechanism. For example, if an applicable manufacturer or applicable group purchasing organization discovers an error or omission in its annual report, under § 703.908(h), applicable manufacturers and applicable GPOs must notify CMS immediately upon discovering errors or omissions in their reports and must submit corrected information to CMS immediately upon confirmation of the error or omission. CMS will update the Web site at least once annually with corrected information. *Form Number:* CMS–10461 (OCN: 0938-New). *Frequency:* Annual; *Affected Public:* Private Sector (business or other for-profit and not-for-profit institutions); *Number of Respondents:* 396,414. *Total Annual Responses:* 396,414. *Total Annual Hours:* 13,327,065. (For policy questions regarding this collection contact Doug Brown at 410–786–0028. For all other issues call 410–786–1326.)

To obtain copies of the supporting statement and any related forms for the proposed paperwork collections referenced above, access CMS Web site address at *http://www.cms.hhs.gov/PaperworkReductionActof1995*, or Email your request, including your address, phone number, OMB number,

and CMS document identifier, to *Paperwork@cms.hhs.gov,* or call the Reports Clearance Office on (410) 786–1326.

To be assured consideration, comments and recommendations for the proposed information collections must be received by the OMB desk officer at the address below, no later than 5 p.m. on June 3, 2013.

OMB, Office of Information and Regulatory Affairs Attention: CMS Desk Officer Fax Number: (202) 395–6974 Email: *OIRA_submission@omb.eop.gov.*

Dated: May 1, 2013.

Martique Jones,

Deputy Director, Regulations Development Group, Office of Strategic Operations and Regulatory Affairs.

[FR Doc. 2013–10681 Filed 5–3–13; 8:45 am]

BILLING CODE 4120–01–P

DEPARTMENT OF HEALTH AND HUMAN SERVICES

Centers for Medicare & Medicaid Services

Notice of Hearing: Reconsideration of Disapproval of Kentucky State Plan Amendments (SPA) 10–007

AGENCY: Centers for Medicare & Medicaid Services (CMS), HHS.

ACTION: Notice of Hearing.

SUMMARY: This notice announces an administrative hearing to be held on June 27, 2013, at the CMS Atlanta Regional Office, Atlanta Federal Center, 61 Forsyth Street, South West, Atlanta, Georgia 30303–8909, to reconsider CMS' decision to disapprove Kentucky SPA 10–007.

Closing Date: Requests to participate in the hearing as a party must be received by the presiding officer by May 21, 2013.

FOR FURTHER INFORMATION CONTACT: Benjamin Cohen, Presiding Officer, CMS, 2520 Lord Baltimore Drive, Suite L, Baltimore, Maryland 21244, Telephone: (410) 786–3169.

SUPPLEMENTARY INFORMATION: This notice announces an administrative hearing to reconsider CMS's decision to disapprove Kentucky SPA 10–007 which was submitted on September 30, 2010, and disapproved on April 2, 2013. The SPA proposed a payment methodology based on actual, incurred, costs for services provided by Community Mental Health Clinics (CMHCs).

At issue in the hearing is whether the proposed cost-based Medicaid payment methodology is consistent with the requirements of section 1902(a)(30)(A) of the Social Security Act (Act) when Kentucky did not specifically document that, under the proposed methodology, non-Medicaid costs would be excluded from the Medicaid payment calculation. Specifically, it appears that the methodology would rely on a cost reporting mechanism which results in over-allocation of both indirect and direct cost to Medicaid services. Specifically, for CMHCs that function within a larger parent organization, the state proposed an inappropriate transfer of cost from the parent organization to the CMHCs. Additionally, the state did not demonstrate that it had an acceptable method of allocating practitioner cost between reimbursable and non-reimbursable activities.

Section 1902(a)(30)(A) of the Act requires that states have methods and procedures in place to ensure payments are consistent with economy, efficiency, and quality of care. Because the proposed payment methodology is based on each provider's reconciled cost, CMS requested that Kentucky document the cost-finding and provider reporting mechanisms used to determine payment. This information would allow CMS to ensure that the proposed payment would be limited to amounts economic and efficient for covered Medicaid services, and were sufficient to ensure quality of care. Upon review of Kentucky's response, CMS determined that Kentucky was not able to document that its cost reporting mechanism properly allocated cost to Medicaid covered services. Specifically, CMS was concerned that Kentucky's methodology did not demonstrate the exclusion of costs incurred outside of these clinics for non-Medicaid activities and services. CMS worked with Kentucky on its cost reporting methodology over an extended period of time; however, CMS was not able to resolve questions surrounding the issue of including non-Medicaid costs. As a result, CMS could not conclude that Kentucky's proposed plan for payment was economic and efficient, or consistent with quality of care. In the absence of this specific information, CMS could not conclude that the requirements of section 1902(a)(30)(A) were satisfied.

Section 1116 of the Act and federal regulations at 42 CFR Part 430, establish Department procedures that provide an administrative hearing for reconsideration of a disapproval of a state plan or plan amendment. CMS is required to publish a copy of the notice to a state Medicaid agency that informs the agency of the time and place of the hearing, and the issues to be considered. If we subsequently notify the agency of additional issues that will be considered at the hearing, we will also publish that notice.

Any individual or group that wants to participate in the hearing as a party must petition the presiding officer within 15 days after publication of this notice, in accordance with the requirements contained at 42 CFR 430.76(b)(2). Any interested person or organization that wants to participate as *amicus curiae* must petition the presiding officer before the hearing begins in accordance with the requirements contained at 42 CFR 430.76(c). If the hearing is later rescheduled, the presiding officer will notify all participants.

The notice to Kentucky announcing an administrative hearing to reconsider the disapproval of its SPA reads as follows:

Mr. Lawrence J. Kissner,
Commissioner,
Cabinet for Health and Family Services,
Department for Medicaid Services,
275 East Main Street, 6W–A,
Frankfort, KY 40621.

Dear Mr. Kissner:

I am responding to your request for reconsideration of the decision to disapprove the Kentucky State Plan Amendment (SPA) 10–007 which was submitted on September 30, 2010, and disapproved on April 2, 2013. The SPA proposed a payment methodology based on actual, incurred, costs for services provided by Community Mental Health Clinics (CMHCs).

I disapproved Kentucky SPA 10–007 because I could not conclude that it complied with section 1902(a)(30)(A) of the Social Security Act (the Act), which requires payments to be consistent with economy efficiency and quality of care. In order to meet this requirement, the Centers for Medicare & Medicaid Services (CMS) requested that Kentucky document the cost-finding and provider reporting mechanisms used to determine payment. Upon review of the commonwealth's response to CMS's formal Request for Additional Information (RAI), CMS determined that Kentucky had not sufficiently documented that its cost reporting mechanism properly allocated cost to Medicaid covered services by excluding non-Medicaid costs from the Medicaid payment calculation.

The CMS worked with Kentucky on its cost reporting methodology over an extended period of time; however, CMS was not able to resolve questions surrounding the issue of including non-Medicaid costs. As a result, CMS could not conclude that Kentucky's proposed plan for payment was economic and efficient, or consistent with quality of care. In the absence of this specific information, CMS could not conclude that the requirements of section 1902(a)(30)(A) of the Act were satisfied.

At issue in this appeal is whether the proposed cost-based Medicaid payment methodology is consistent with the requirements of section 1902(a)(30)(A) of the

Act when Kentucky did not specifically document that, under the proposed methodology, non-Medicaid costs would be excluded from the Medicaid payment calculation. Specifically, it appears that the methodology would rely on a cost reporting mechanism which results in over-allocation of both indirect and direct cost to Medicaid services. Specifically, for CHMCs that function within a larger central office unit, the state proposed an inappropriate transfer of cost from the larger central office unit to the CHMCs. Additionally, the state did not demonstrate that it had an acceptable method of allocating practitioner cost between reimbursable and non-reimbursable activities.

I am scheduling a hearing on your request for reconsideration to be held on June 27, 2013, at the CMS Atlanta Regional Office, Atlanta Federal Center, 61 Forsyth Street, South West, Atlanta, Georgia 30303–8909.

If this date is not acceptable, I would be glad to set another date that is mutually agreeable to the parties. The hearing will be governed by the procedures prescribed by federal regulations at 42 CFR Part 430.

I am designating Mr. Benjamin Cohen as the presiding officer. If these arrangements present any problems, please contact Mr. Cohen at (410) 786–3169. In order to facilitate any communication that may be necessary between the parties prior to the hearing, please notify the presiding officer to indicate acceptability of the hearing date that has been scheduled and provide names of the individuals who will represent the state at the hearing.

Sincerely,

Marilyn Tavenner,

Acting Administrator.

Section 1116 of the Social Security Act (42 U.S.C. 1316; 42 CFR 430.18)

(Catalog of Federal Domestic Assistance program No. 13.714, Medicaid Assistance Program.)

Dated: April 29, 2013.

Marilyn Tavenner,

Acting Administrator, Centers for Medicare & Medicaid Services.

[FR Doc. 2013–10695 Filed 5–3–13; 8:45 am]

BILLING CODE P

DEPARTMENT OF HEALTH AND HUMAN SERVICES

Administration for Children and Families

Proposed Information Collection Activity; Comment Request

Title: Health Profession Opportunity Grants (HPOG) program.

Omb No.: 0970–0394.

Description: The Administration for Children and Families (ACF), U.S. Department of Health and Human Services (HHS) is proposing data collection activities as part of the Health Profession Opportunity Grants (HPOG) program. ACF has developed a multi-pronged research and evaluation approach for the HPOG program to better understand and assess the activities conducted and their results. The proposed data collection activities described in this notice will provide data for two evaluation components, the National Implementation Evaluation of the Health Profession Opportunity Grants to Serve TANF Recipients and Other Low-Income Individuals (HPOG–NIE) and the Impact Studies of the Health Profession Opportunity Grants (HPOG-Impact).

Two data collection efforts related to HPOG research were approved by OMB, including approval of a Performance Reporting System (PRS) (approved September 2011) and for collection of additional baseline data for the HPOG-Impact study (approved October 2012). These collection activities will continue under this new request.

This 30-day notice describes the remaining data collection efforts for both HPOG–NIE and HPOG-Impact. Information collection described under 1 through 13 are included in the current OMB submission for review. Information collections 14 through 18 will be submitted in a future information collection clearance request.

The goal of HPOG–NIE is to describe and assess the implementation, systems change, and outcomes and other important information about the operations of the 27 HPOG grantees focused on TANF recipients and other low-income individuals. To achieve these goals, it is necessary to collect data about the HPOG program designs and implementation, HPOG partner and program networks and indicators of systems change, employers' perceptions of HPOG programs, the composition and intensity of HPOG services received, participant characteristics and HPOG experiences, and participant outputs and outcomes.

The goal of HPOG-Impact is to evaluate the effectiveness of approaches used by 20 of the HPOG grantees to provide TANF recipients and other low-income individuals with opportunities for education, training and advancement within the health care field. HPOG-Impact also is intended to evaluate variation in participant impact that may be attributable to different HPOG program components and models. The impact study design is a classic experiment in which eligible applicants will be randomly assigned to a treatment group that is offered participation in HPOG and a control group that is not permitted to enroll in HPOG. In approximately 13 sites, eligible applicants will be randomized into two treatment arms (a basic and an enhanced version of the intervention) and a control group. Data collected from the HPOG participants served by these 20 grantees will also be used for the HPOG–NIE study.

The new information collection activities proposed for HPOG–NIE and HPOG-Impact include: (1) The HPOG–NIE sampling questionnaire; (2) The HPOG–NIE follow-up phone protocol for the stakeholder/network survey; (3) The HPOG–NIE grantee survey; (4) The HPOG-Impact implementation interview guide for partnering employers; (5) The HPOG-Impact implementation interview guide for instructors; (6) The HPOG-Impact implementation interview guide for HPOG program management; (7) The HPOG-Impact implementation interview guide for HPOG program staff; (8) The HPOG–NIE management and staff survey; (9) The HPOG–NIE stakeholder/network survey; (10) The HPOG–NIE employer survey; (11) The HPOG-Impact 15-month participant follow-up survey; (12) The HPOG-Impact 15-month control group member follow-up survey; and (13) The HPOG–NIE 15-month participant follow-up survey.

Data collection activities to submit in a future information collection request include: (14) the HPOG–NIE follow-up stakeholder/network survey; (15) the HPOG-Impact second follow-up survey of both treatment and control group members; (16) the HPOG–NIE second supplemental participant follow-up survey; (17) HPOG-Impact follow-up data collection on children of HPOG-Impact study participants; and (18) the HPOG–NIE in-person interviews with HPOG managers and staff.

Respondents: Individuals enrolled in HPOG interventions; control group members; HPOG program managers; HPOG program staff, including instructors and case managers; representatives of partner agencies and stakeholders, including support service providers, education and vocational training providers, Workforce Investment Boards, TANF agencies, and local health care employers.

ANNUAL RESPONSE BURDEN ESTIMATES

[This information collection request is for a two-year period.]

Instrument	Total number of respondents	No. of responses per respondent	Average burden hours per response	Total burden hours	Annual burden hours
Previously Approved Instruments					
PRS	32	4	31.2	3,994	1,997
HPOG-Impact Baseline Survey(s) (Supplemental baseline questions; study sample members)	10,500	1	0.25	2,625	1,313
HPOG-Impact Baseline Survey(s) (Supplemental baseline questions; grantees)	20	525	0.25	2,625	1,313
Current Request for Approval					
HPOG–NIE Sampling Questionnaire for the HPOG surveys	54	1	2	108	54
HPOG–NIE Follow-Up Phone Call Protocol for the Stakholder/Network survey	162	1	0.17	28	14
HPOG–NIE Grantee survey	54	1	4	216	108
HPOG-Impact Implementation interview guide for partnering employers	60	1	0.50	30	15
HPOG-Impact Implementation interview guide for instructors	60	1	0.75	45	22
HPOG-Impact Implementation interview guide for HPOG program mangement	20	1	1.50	30	15
HPOG-Impact Implementation interview guide for HPOG program staff	80	1	1	80	40
HPOG–NIE Management and Staff survey	540	1	0.5	270	135
HPOG–NIE Stakeholder/Network survey	500	1	0.5	250	125
HPOG–NIE Employer survey	200	1	0.5	100	50
HPOG-Impact 15-month Participant Follow-Up survey	5,600	1	0.7	3,920	1,960
HPOG-Impact 15-month Control Group Member Follow-Up survey	2,800	1	0.6	1,680	840
HPOG–NIE 15-month Participant Follow-Up survey	600	1	0.7	420	210

Estimated Annual Response Burden Hours: 8,211.

Additional Information: Copies of the proposed collection may be obtained by writing to the Administration for Children and Families, Office of Planning, Research and Evaluation, 370 L'Enfant Promenade, SW., Washington, DC 20447, Attn: OPRE Reports Clearance Officer. All requests should be identified by the title of the information collection. Email address: OPREinfocollection@acf.hhs.gov.

OMB Comment: OMB is required to make a decision concerning the collection of the information between 30 and 60 days after publication of this document in the **Federal Register**. Therefore, a comment is best assured of having its full effect if OMB receives it within 30 days of publication. Written comments and recommendations for the proposed information collections should be sent directly to the following: Office of Management and Budget, Paperwork Reduction Project, Email: OIRA_OIRA_SUBMISSION@OMB.EOP.GOV, Attn: Desk Officer for the Administration for Children and Families.

Steven M. Hanmer,

OPRE Reports Clearance Officer.

[FR Doc. 2013–10577 Filed 5–3–13; 8:45 am]

BILLING CODE 4184–09–M

DEPARTMENT OF HEALTH AND HUMAN SERVICES

Food and Drug Administration

[Docket No. FDA–2013–N–0485]

Agency Information Collection Activities; Proposed Collection; Comment Request; Electronic Submission Process for Voluntary Complaints to the Center for Devices and Radiological Health

AGENCY: Food and Drug Administration, HHS.

ACTION: Notice.

SUMMARY: The Food and Drug Administration (FDA) is announcing an opportunity for public comment on the proposed collection of certain information by the Agency. Under the Paperwork Reduction Act of 1995 (the PRA), Federal Agencies are required to publish notice in the **Federal Register** concerning each proposed collection of information and to allow 60 days for public comment in response to the notice. This notice solicits comments on information voluntarily submitted to the Center for Devices and Radiological Health (CDRH) on actual or potential health risk concerns about a medical device or radiological product or its use.

DATES: Submit either electronic or written comments on the collection of information by July 5, 2013.

ADDRESSES: Submit electronic comments on the collection of information to *http://www.regulations.gov.* Submit written comments on the collection of information to the Division of Dockets Management (HFA–305), Food and Drug Administration, 5630 Fishers Lane, rm. 1061, Rockville, MD 20852. All comments should be identified with the docket number found in brackets in the heading of this document.

FOR FURTHER INFORMATION CONTACT: Daniel Gittleson, Office of Information Management, Food and Drug Administration, 1350 Piccard Dr., PI50–

400B, Rockville, MD 20850, 301–796–5156, *daniel.gittleson@fda.hhs.gov.*

SUPPLEMENTARY INFORMATION: Under the PRA (44 U.S.C. 3501–3520), Federal Agencies must obtain approval from the Office of Management and Budget (OMB) for each collection of information they conduct or sponsor. ''Collection of information'' is defined in 44 U.S.C. 3502(3) and 5 CFR 1320.3(c) and includes Agency requests or requirements that members of the public submit reports, keep records, or provide information to a third party. Section 3506(c)(2)(A) of the PRA (44 U.S.C. 3506(c)(2)(A)) requires Federal Agencies to provide a 60-day notice in the **Federal Register** concerning each proposed collection of information before submitting the collection to OMB for approval. To comply with this requirement, FDA is publishing notice of the proposed collection of information set forth in this document.

With respect to the following collection of information, FDA invites comments on these topics: (1) Whether the proposed collection of information is necessary for the proper performance of FDA's functions, including whether the information will have practical utility; (2) the accuracy of FDA's estimate of the burden of the proposed collection of information, including the validity of the methodology and assumptions used; (3) ways to enhance the quality, utility, and clarity of the information to be collected; and (4) ways to minimize the burden of the collection of information on respondents, including through the use of automated collection techniques, when appropriate, and other forms of information technology.

Electronic Submission Process for Voluntary Complaints to the Center for Devices and Radiological Health—(OMB Control Number 0910–NEW)

This ICR collects information voluntarily submitted to the Center for Devices and Radiological Health (CDRH) on actual or potential health risk concerns about a medical device or radiological product or its use. Because there has been no established guidelines or instructions on how to submit a compliant to CDRH, complaints often contain minimal information and are received via phone calls, emails, or conversationally from any CDRH staff. CDRH seeks to establish a consistent format and process for the submission of device complaints that will enhance our timeliness in receiving, assessing and evaluating voluntary complaints. The information provided in the complaints received by CDRH may be used to clarify the recurrence or emergence of significant device-related risks to the general public and the need to initiate educational outreach or regulatory action to minimize or mitigate identified risks.

FDA estimates the burden of this collection of information as follows:

TABLE 1—ESTIMATED ANNUAL REPORTING BURDEN[1]

Activity	Number of respondents	Number of responses per respondent	Total annual responses	Average burden per response	Total hours
	700	1	700	.25 (15 minutes)	125

[1] There are no capital costs or operating and maintenance costs associated with this collection of information.

Dated: April 30, 2013.

Leslie Kux,

Assistant Commissioner for Policy.

[FR Doc. 2013–10597 Filed 5–3–13; 8:45 am]

BILLING CODE 4160–01–P

DEPARTMENT OF HEALTH AND HUMAN SERVICES

Food and Drug Administration

[Docket No. FDA–2013–N–0418]

An Evaluation of the Prescription Drug User Fee Act Workload Adjuster; Request for Comments

AGENCY: Food and Drug Administration, HHS.

ACTION: Notice; request for comments.

SUMMARY: The Food and Drug Administration (FDA) is announcing an opportunity for public comment on an assessment of the Prescription Drug User Fee Act (PDUFA) Workload Adjuster conducted by an independent consulting firm. This assessment was conducted to fulfill FDA performance commitments made as part of the fifth authorization of PDUFA in section XV, ''Improving FDA Performance Management,'' subsection B, which was reauthorized by the Food and Drug Administration Safety and Innovation Act (FDASIA) of 2012. The assessment will be conducted by an independent consultant in two phases. This is the first assessment of two during PDUFA V to evaluate whether the adjustment reasonably represents actual changes in workload volume and complexity in the human drug review program and present options to discontinue, retain, or modify any elements of the adjustment. After review of the report and receipt of public comment, FDA can adopt appropriate change to the workload adjustment methodology, if warranted.

DATES: Submit electronic or written comments by June 5, 2013.

ADDRESSES: Submit electronic comments to *http://www.regulations.gov.* Submit written comments to the Division of Dockets Management (HFA–305), Food and Drug Administration, 5630 Fishers Lane, rm. 1061, Rockville, MD 20852. All comments should be identified with the docket number found in brackets in the heading of this document.

FOR FURTHER INFORMATION CONTACT: Giles Mills, Office of Planning, Food and Drug Administration, 10903 New Hampshire Ave., Bldg. 32, rm. 3288, Silver Spring, MD 20993–0002, 301–796–4707, *Giles.Mills@fda.hhs.gov.*

SUPPLEMENTARY INFORMATION:

I. Background

On July 9, 2012, the President signed into law FDASIA. This new law includes the reauthorization of PDUFA that provides FDA with the necessary resources to maintain a predictable and efficient review process for human drug and biologic products.

Title I of FDASIA is the fifth authorization of PDUFA and includes by reference the performance goals and procedures for PDUFA V transmitted by the Secretary of Health and Human Services to Congress in a commitment letter. FDA developed recommendations for PDUFA V in consultation with drug industry representatives, patient and consumer advocates, healthcare professionals, and other public stakeholders from July 2010 through May 2011. These recommendations included an FDA commitment to contract with an independent

accounting firm to review the adequacy of the PDUFA adjustment for changes in workload (hereafter referred to as the workload adjuster).

The workload adjuster was introduced in PDUFA III to allow for FDA to augment the total user fee revenue amount each fiscal year (after adjusting for inflation) to account for changes in workload volume in the human drug application review process. Workload volume is measured by the changes in the number of new drug applications and biologics license applications (NDAs/BLAs), active commercial investigational new drugs (INDs), efficacy supplements, and manufacturing supplements submitted to the human drug review program during the most recent 5-year period.

In PDUFA IV, the workload adjuster was expanded to account for the workload complexity (known as the adjustment for changes in review activities) associated with the review of NDAs/BLAs and active commercial INDs. The NDA/BLA complexity is measured by changes in the number of labeling supplements, annual report reviews, and NDA/BLA meetings per NDA/BLA. IND complexity is measured by changes in the number of special protocol assessments and IND meetings per active commercial IND.

As part of the PDUFA IV recommendations, FDA committed to an evaluation of the adjustment for changes in review activities by an independent accounting firm. The study, conducted by Deloitte & Touche, LLP, found that the adjustment methodology used by FDA reasonably captures changes in the workload complexity for reviewing human drug applications under PDUFA IV. While the FY 2009 evaluation concluded that the adjustment methodology was reasonable at that point in time, the complexity of new drug applications and FDA's regulatory responsibilities are constantly evolving. Moreover, the complexity component of the PDUFA IV workload adjuster was formulated before the enactment of the Food and Drug Administration Amendments Act (FDAAA). Thus, the workload adjuster does not account for new and significant review activities required by FDAAA, such as risk evaluation and mitigation strategies, safety labeling changes, advisory committee meetings, and post-market safety requirements, among others.

Given the dynamic nature of drug products and FDA's regulatory responsibilities, FDA committed to periodic reassessments of the workload adjuster in PDUFA V to ensure that it is achieving its intended role of adjusting the user fee revenues to reflect actual changes in FDA's workload volume and complexity.

The PDUFA V commitment letter instructs FDA to contract with an independent accounting or consulting firm to conduct two assessments of the workload adjuster. This first assessment (to examine the performance of the workload adjuster since FY 2009) was just completed. The independent accounting or consulting firm is required to submit reports based on their assessments. The reports will evaluate whether the workload adjuster reasonably represents actual changes in workload volume and complexity and will present recommendations to discontinue, retain, or modify any elements of the adjustment. After review of the reports and receipt of public comments, FDA, if warranted, may implement appropriate changes to the methodology. If FDA adopts changes to the methodology based on the first report, the changes are effective the fiscal year after FDA adopts the changes and each subsequent fiscal year.

FDA is seeking public comment now on the first assessment of the PDUFA Workload Adjuster, available at *http://www.fda.gov/ForIndustry/UserFees/PrescriptionDrugUserFee.*

II. Comments

Interested persons may submit either electronic comments regarding the Analysis to *http://www.regulations.gov* or written comments to the Division of Dockets Management (see **ADDRESSES**). It is only necessary to send one set of comments. Identify comments with the docket number found in brackets in the heading of this document. Received comments may be seen in the Division of Dockets Management between 9 a.m. and 4 p.m., Monday through Friday, and will be posted to the docket at *http://www.regulations.gov.*

Dated: April 30, 2013.

Leslie Kux,

Assistant Commissioner for Policy.

[FR Doc. 2013–10626 Filed 5–3–13; 8:45 am]

BILLING CODE 4160–01–P

DEPARTMENT OF HEALTH AND HUMAN SERVICES

Food and Drug Administration

[Docket No. FDA–2013–N–0001]

Food and Drug Administration/International Society for Pharmaceutical Engineering Co-Sponsorship Educational Workshop: Redefining the 'C' in CGMP (Current Good Manufacturing Practices): Creating, Implementing, and Sustaining a Culture of Quality

AGENCY: Food and Drug Administration, HHS.

ACTION: Notice of public conference.

The Food and Drug Administration (FDA), in co-sponsorship with the International Society of Pharmaceutical Engineering (ISPE), is announcing a conference entitled ''Redefining the 'C' in CGMP: Creating, Implementing and Sustaining a Culture of Quality'' Pharmaceutical Quality System (ICH Q10) Conference.

The conference will span 3 days and is dedicated to teaching the principles of CGMP, reaping the benefits that come from establishing and maintaining a state of control, implementing continual improvement, enhancing regulatory compliance, and meeting quality objectives every day. The conference will take place in Baltimore, MD, and will draw on the best industry and regulator contributors on this topic.

Date and Time: The conference will be held on June 11, 2013, from 8:30 a.m. to 5 p.m.; June 12, 2013, from 8 a.m. to 5 p.m.; and June 13, 2013, from 8 a.m. to 4:30 p.m.

Location: The event will be held at the Renaissance Baltimore Harborplace Hotel, 202 East Pratt St., Baltimore, MD 21201, 1–800–535–1201.

Contact Person: Nancy Berg, President, International Society for Pharmaceutical Engineering, 600 North Westshore Blvd., suite 900, Tampa, FL 33609, Web site: *http://www.ISPE.org/CGMP.*

Conference attendees are responsible for their own accommodations.

Registration: You are encouraged to register at your earliest convenience. The ISPE registration fees cover the cost of facilities, materials, and breaks. Seats are limited; please submit your registration as soon as possible. Conference space will be filled in order of receipt of registration. Those accepted to the conference will receive confirmation. Registration will close after available conference space is filled. Onsite registration will be available on a space available basis on the day of the

public conference beginning at 7 a.m. on June 11, 2013. The cost of registration is as follows:

ISPE Member	$1,545 (prior to May 13); $1,745 (after May 13 and onsite).
ISPE Nonmember	$1,905 (prior to May 13); $2,115 (after May 13 and onsite).
ISPE New Member	$1,814 (prior to May 13); $2,014 (after May 13 and onsite).
Federal Government Employee registering prior to/after May13	$500.
FDA Planning Committee Members and Invited Speakers	(free) Fee Waived.
ISPE Active, Functional and Program Committee Members	$1,005 (prior and after May 13).
Student (prior to/after May 13)	$200.
Individuals from Academia/Emerging Economy	$1,005 (prior to May 13); $1,135 (after May 13 and onsite).

Registration instructions: To register, please submit your name, affiliation, mailing address, phone number, fax number, and email address, along with a check or money order payable to ''ISPE.'' To register via the Internet, go to the ISPE Web site, *www.ISPE.org,* to confirm the prevailing registration fees.

Dated: May 1, 2013.

Leslie Kux,

Assistant Commissioner for Policy.

[FR Doc. 2013–10651 Filed 5–3–13; 8:45 am]

BILLING CODE 4160–01–P

DEPARTMENT OF HEALTH AND HUMAN SERVICES

National Institutes of Health

Center for Scientific Review; Notice of Closed Meeting

Pursuant to section 10(d) of the Federal Advisory Committee Act, as amended (5 U.S.C. App.), notice is hereby given of the following meeting.

The meeting will be closed to the public in accordance with the provisions set forth in sections 552b(c)(4) and 552b(c)(6), Title 5 U.S.C., as amended. The grant applications and the discussions could disclose confidential trade secrets or commercial property such as patentable material, and personal information concerning individuals associated with the grant applications, the disclosure of which would constitute a clearly unwarranted invasion of personal privacy.

Name of Committee: Center for Scientific Review Special Emphasis Panel; VH–BST Member Conflicts.

Date: May 21, 2013.

Time: 1:00 p.m. to 3:00 p.m.

Agenda: To review and evaluate grant applications.

Place: National Institutes of Health, 6701 Rockledge Drive, Bethesda, MD 20892 (Telephone Conference Call).

Contact Person: Olga A Tjurmina, Ph.D., Scientific Review Officer, Center for Scientific Review, National Institutes of Health, 6701 Rockledge Drive, Room 4138, MSC 7814, Bethesda, MD 20892, (301) 451–1375, *ot3d@nih.gov.*

This notice is being published less than 15 days prior to the meeting due to the timing limitations imposed by the review and funding cycle.

(Catalogue of Federal Domestic Assistance Program Nos. 93.306, Comparative Medicine; 93.333, Clinical Research, 93.306, 93.333, 93.337, 93.393–93.396, 93.837–93.844, 93.846–93.878, 93.892, 93.893, National Institutes of Health, HHS)

Dated: April 30, 2013.

Melanie J. Gray,

Program Analyst, Office of Federal Advisory Committee Policy.

[FR Doc. 2013–10570 Filed 5–3–13; 8:45 am]

BILLING CODE 4140–01–P

DEPARTMENT OF HEALTH AND HUMAN SERVICES

National Institutes of Health

National Institute of Allergy and Infectious Diseases; Notice of Closed Meetings

Pursuant to section 10(d) of the Federal Advisory Committee Act, as amended (5 U.S.C. App.), notice is hereby given of the following meetings.

The meetings will be closed to the public in accordance with the provisions set forth in sections 552b(c)(4) and 552b(c)(6), Title 5 U.S.C., as amended. The grant applications and the discussions could disclose confidential trade secrets or commercial property such as patentable material, and personal information concerning individuals associated with the grant applications, the disclosure of which would constitute a clearly unwarranted invasion of personal privacy.

Name of Committee: National Institute of Allergy and Infectious Diseases Special Emphasis Panel; Clinical Trials Units for NIAID Networks.

Date: May 31, 2013.

Time: 10:00 a.m. to 5:00 p.m.

Agenda: To review and evaluate grant applications.

Place: National Institutes of Health, 1202, 6700B Rockledge Drive, Bethesda, MD 20817 (Telephone Conference Call).

Contact Person: Roberta Binder, Ph.D., Scientific Review Officer, Scientific Review Program, Division of Extramural Activities, National Institutes of Health/NIAID, 6700B Rockledge Drive, Room 3130, Bethesda, MD 20892–7616, 301–496–7966, *rbinder@niaid.nih.gov.*

Name of Committee: National Institute of Allergy and Infectious Diseases Special Emphasis Panel; Clinical Trials Unit for NIAID Networks.

Date: July 2, 2013.

Time: 10:00 a.m. to 5:00 p.m.

Agenda: To review and evaluate grant applications.

Place: National Institutes of Health, 3130, 6700B Rockledge Drive, Bethesda, MD 20817 (Telephone Conference Call).

Contact Person: Roberta Binder, Ph.D., Scientific Review Officer, Scientific Review Program, Division of Extramural Activities, National Institutes of Health/NIAID, 6700B Rockledge Drive, Room 3130, Bethesda, MD 20892–7616, 301–496–7966, *rbinder@niaid.nih.gov.*

(Catalogue of Federal Domestic Assistance Program Nos. 93.855, Allergy, Immunology, and Transplantation Research; 93.856, Microbiology and Infectious Diseases Research, National Institutes of Health, HHS)

Dated: April 30, 2013.

David Clary,

Program Analyst, Office of Federal Advisory Committee Policy.

[FR Doc. 2013–10575 Filed 5–3–13; 8:45 am]

BILLING CODE 4140–01–P

DEPARTMENT OF HEALTH AND HUMAN SERVICES

National Institutes of Health

Center for Scientific Review; Notice of Closed Meetings

Pursuant to section 10(d) of the Federal Advisory Committee Act, as amended (5 U.S.C. App.), notice is hereby given of the following meetings.

The meetings will be closed to the public in accordance with the provisions set forth in sections 552b(c)(4) and 552b(c)(6), Title 5 U.S.C., as amended. The grant applications and the discussions could disclose confidential trade secrets or commercial property such as patentable material, and personal information concerning individuals associated with the grant applications, the disclosure of which would constitute a clearly unwarranted invasion of personal privacy.

Name of Committee: Molecular, Cellular and Developmental Neuroscience Integrated Review Group; Cellular and Molecular Biology of Glia Study Section.
Date: May 30, 2013.
Time: 8:00 a.m. to 7:00 p.m.
Agenda: To review and evaluate grant applications.
Place: Doubletree Hotel Bethesda (Formerly Holiday Inn Select), 8120 Wisconsin Avenue, Bethesda, MD 20814.
Contact Person: Toby Behar, Ph.D., Scientific Review Officer, Center for Scientific Review, National Institutes of Health, 6701 Rockledge Drive, Room 4136, MSC 7850, Bethesda, MD 20892, (301) 435–4433, *behart@csr.nih.gov*.

Name of Committee: Emerging Technologies and Training Neurosciences Integrated Review Group; Bioengineering of Neuroscience, Vision and Low Vision Technologies Study Section.
Date: May 30–31, 2013.
Time: 8:00 a.m. to 3:00 p.m.
Agenda: To review and evaluate grant applications.
Place: Renaissance Washington DC, Dupont Circle, 1143 New Hampshire Avenue NW., Washington, DC 20037.
Contact Person: Robert C Elliott, Ph.D., Scientific Review Officer, Center for Scientific Review, National Institutes of Health, 6701 Rockledge Drive, Room 5190, MSC 7846, Bethesda, MD 20892, 301–435–3009, *elliotro@csr.nih.gov*.

Name of Committee: Oncology 1-Basic Translational Integrated Review Group; Cancer Etiology Study Section.
Date: May 30, 2013.
Time: 8:00 a.m. to 6:00 p.m.
Agenda: To review and evaluate grant applications.
Place: Embassy Suites, 1900 Diagonal Road, Alexandria, VA 22314.
Contact Person: Elaine Sierra-Rivera, Ph.D., Scientific Review Officer, Center for Scientific Review, National Institutes of Health, 6701 Rockledge Drive, Room 6184, MSC 7804, Bethesda, MD 20892, 301–435–1779, *riverase@csr.nih.gov*.

Name of Committee: Risk, Prevention and Health Behavior Integrated Review Group; Psychosocial Risk and Disease Prevention Study Section.
Date: May 30–31, 2013.
Time: 8:00 a.m. to 5:30 p.m.
Agenda: To review and evaluate grant applications.
Place: Embassy Suites at the Chevy Chase Pavilion, 4300 Military Road NW., Washington, DC 20015.
Contact Person: Stacey FitzSimmons, Ph.D., Scientific Review Officer, Center for Scientific Review, National Institutes of Health, 6701 Rockledge Drive, Room 3114, MSC 7808, Bethesda, MD 20892, 301–451–9956, *fitzsimmonss@csr.nih.gov*.

Name of Committee: Biological Chemistry and Macromolecular Biophysics Integrated Review Group; Biochemistry and Biophysics of Membranes Study Section.
Date: May 30, 2013.
Time: 8:00 a.m. to 6:30 p.m.
Agenda: To review and evaluate grant applications.
Place: Sir Francis Drake Hotel, 450 Powell Street at Sutter, San Francisco, CA 94102.
Contact Person: Nuria E. Assa-Munt, Ph.D., Scientific Review Officer, Center for Scientific Review, National Institutes of Health, 6701 Rockledge Drive, Room 4164, MSC 7806, Bethesda, MD 20892, (301) 451–1323, *assamunu@csr.nih.gov*.

Name of Committee: Immunology Integrated Review Group; Cellular and Molecular Immunology—B Study Section.
Date: May 30–31, 2013.
Time: 8:30 a.m. to 5:00 p.m.
Agenda: To review and evaluate grant applications.
Place: Residence Inn Bethesda, 7335 Wisconsin Avenue, Bethesda, MD 20814.
Contact Person: Betty Hayden, Ph.D., Scientific Review Officer, Center for Scientific Review, National Institutes of Health, 6701 Rockledge Drive, Room 4206, MSC 7812, Bethesda, MD 20892, 301–435–1223, *haydenb@csr.nih.gov*.

Name of Committee: Population Sciences and Epidemiology Integrated Review Group; Social Sciences and Population Studies A Study Section.
Date: May 30, 2013.
Time: 8:30 a.m. to 6:30 p.m.
Agenda: To review and evaluate grant applications.
Place: Lorien Hotel & Spa, 1600 King Street, Alexandria, VA 22314.
Contact Person: Suzanne Ryan, Ph.D., Scientific Review Officer, Center for Scientific Review, National Institutes of Health, 6701 Rockledge Drive, Room 3139, MSC 7770, Bethesda, MD 20892, (301) 435–1712, *ryansj@csr.nih.gov*.

Name of Committee: Molecular, Cellular and Developmental Neuroscience Integrated Review Group; Cellular and Molecular Biology of Neurodegeneration Study Section.
Date: May 30–31, 2013.
Time: 8:30 a.m. to 4:00 p.m.
Agenda: To review and evaluate grant applications.
Place: Tremont Suites Hotel & Grand Historic Venue, 222 St. Paul Place, Baltimore, MD 20202.
Contact Person: Laurent Taupenot, Ph.D., Scientific Review Officer, Center for Scientific Review, National Institutes of Health, 6701 Rockledge Drive, Room 4183, MSC 7850, Bethesda, MD 20892, 301–435–1203, *taupenol@csr.nih.gov*.

Name of Committee: Center for Scientific Review Special Emphasis Panel; Member Conflict: Integrative Neuroscience.
Date: May 30, 2013.
Time: 9:00 a.m. to 6:00 p.m.
Agenda: To review and evaluate grant applications.
Place: National Institutes of Health, 6701 Rockledge Drive, Bethesda, MD 20892 (Virtual Meeting).
Contact Person: Kirk Thompson, Ph.D., Scientific Review Officer, Center for Scientific Review, National Institutes of Health, 6701 Rockledge Drive, Room 5184, MSC 7844, Bethesda, MD 20892, 301–435–1242, *kgt@mail.nih.gov*.

Name of Committee: Integrative, Functional and Cognitive Neuroscience Integrated Review Group; Neuroendocrinology, Neuroimmunology, Rhythms and Sleep Study Section.
Date: May 31, 2013.
Time: 8:00 a.m. to 5:00 p.m.
Agenda: To review and evaluate grant applications.
Place: Pier 5 Hotel, 711 Eastern Avenue, Baltimore, MD 21202.
Contact Person: Michael Selmanoff, Ph.D., Scientific Review Officer, Center for Scientific Review, National Institutes of Health, 6701 Rockledge Drive, Room 5164, MSC 7844, Bethesda, MD 20892, 301–435–1119, *mselmanoff@csr.nih.gov*.

Name of Committee: Center for Scientific Review Special Emphasis Panel; Vision Engineering.
Date: May 31, 2013.
Time: 3:00 p.m. to 5:00 p.m.
Agenda: To review and evaluate grant applications.
Place: Renaissance Washington, DC Dupont Circle, 1143 New Hampshire Avenue NW., Washington, DC 20037.
Contact Person: Robert C Elliott, Ph.D., Scientific Review Officer, Center for Scientific Review, National Institutes of Health, 6701 Rockledge Drive, Room 3130, MSC 7850, Bethesda, MD 20892, 301–435–3009, *elliotro@csr.nih.gov*.

(Catalogue of Federal Domestic Assistance Program Nos. 93.306, Comparative Medicine; 93.333, Clinical Research, 93.306, 93.333, 93.337, 93.393–93.396, 93.837–93.844, 93.846–93.878, 93.892, 93.893, National Institutes of Health, HHS)

Dated: April 30, 2013.

Melanie J. Gray,

Program Analyst, Office of Federal Advisory Committee Policy.

[FR Doc. 2013–10571 Filed 5–3–13; 8:45 am]

BILLING CODE 4140–01–P

DEPARTMENT OF HEALTH AND HUMAN SERVICES

National Institutes of Health

National Center for Advancing Translational Sciences; Notice of Meetings

Pursuant to section 10(d) of the Federal Advisory Committee Act, as amended (5 U.S.C. App.), notice is hereby given of meetings of the National Center for Advancing Translational Sciences Advisory Council.

The meetings will be open to the public as indicated below, with attendance limited to space available. Individuals who plan to attend and need special assistance, such as sign language interpretation or other reasonable accommodations, should notify the Contact Person listed below in advance of the meeting.

The meetings will be closed to the public in accordance with the provisions set forth in sections 552b(c)(4) and 552b(c)(6), Title 5 U.S.C.,

as amended. The grant applications and the discussions could disclose confidential trade secrets or commercial property such as patentable material, and personal information concerning individuals associated with the grant applications, the disclosure of which would constitute a clearly unwarranted invasion of personal privacy.

Name of Committee: Cures Acceleration Network Review Board.
Date: May 17, 2013.
Time: 8:30 a.m. to 2:45 p.m.
Agenda: Report of the Institute Director.
Place: National Institutes of Health, Building 31, Conference Room 6, 31 Center Drive, Bethesda, MD 20892.
Contact Person: Danilo A. Tagle, Ph.D., Executive Secretary, National Center for Advancing Translational Sciences, 1 Democracy Plaza, Room 992, Bethesda, MD 20892, 301–594–8064,*Danilo.Tagle@nih.gov*.

This notice is being published less than 15 days prior to the meeting due to scheduling constraints.

Name of Committee: National Center for Advancing Translational Sciences Advisory Council.
Date: May 17, 2013.
Open: 8:30 a.m. to 2:45 p.m.
Agenda: Report from the Institute Director and other staff.
Place: National Institutes of Health, Building 31, Conference Room 6, 31 Center Drive, Bethesda, MD 20892.
Closed: 3:00 p.m. to 4:30 p.m.
Agenda: To review and evaluate grant applications.
Place: National Institutes of Health, Building 31, Conference Room 6, 31 Center Drive, Bethesda, MD 20892.
Contact Person: Danilo A. Tagle, Ph.D., Executive Secretary, National Center for Advancing Translational, Sciences, 1 Democracy Plaza, Room 992, Bethesda, MD 20892, 301–594–8064, *Danilo.Tagle@nih.gov*.

This notice is being published less than 15 days prior to the meeting due to scheduling constraints.

Dated: April 30, 2013.

David Clary,

Program Analyst, Office of Federal Advisory Committee Policy.

[FR Doc. 2013–10573 Filed 5–3–13; 8:45 am]

BILLING CODE 4140–01–P

DEPARTMENT OF HEALTH AND HUMAN SERVICES

National Institutes of Health

Center for Scientific Review; Notice of Closed Meetings

Pursuant to section 10(d) of the Federal Advisory Committee Act, as amended (5 U.S.C. App.), notice is hereby given of the following meetings.

The meetings will be closed to the public in accordance with the provisions set forth in sections 552b(c)(4) and 552b(c)(6), Title 5 U.S.C., as amended. The grant applications and the discussions could disclose confidential trade secrets or commercial property such as patentable material, and personal information concerning individuals associated with the grant applications, the disclosure of which would constitute a clearly unwarranted invasion of personal privacy.

Name of Committee: Surgical Sciences, Biomedical Imaging and Bioengineering Integrated Review Group; Bioengineering, Technology and Surgical Sciences Study Section.
Date: June 3–4, 2013.
Time: 8:00 a.m. to 5:00 p.m.
Agenda: To review and evaluate grant applications.
Place: Hilton Long Beach and Executive Center, 701 West Ocean Boulevard, Long Beach, CA 90831.
Contact Person: Khalid Masood, Ph.D., Scientific Review Officer, Center for Scientific Review, National Institutes of Health, 6701 Rockledge Drive, Room 5120, MSC 7854, Bethesda, MD 20892, 301–435–2392, *masoodk@csr.nih.gov*.

Name of Committee: Integrative, Functional and Cognitive Neuroscience Integrated Review Group; Mechanisms of Sensory, Perceptual, and Cognitive Processes Study Section.
Date: June 3–4, 2013.
Time: 8:00 a.m. to 5:00 p.m.
Agenda: To review and evaluate grant applications.
Place: Doubletree Hotel Bethesda (Formerly Holiday Inn Select), 8120 Wisconsin Avenue, Bethesda, MD 20814.
Contact Person: Kirk Thompson, Ph.D., Scientific Review Officer, Center for Scientific Review, National Institutes of Health, 6701 Rockledge Drive, Room 5184, MSC 7844, Bethesda, MD 20892 301–435–1242, *kgt@mail.nih.gov*.

Name of Committee: Digestive, Kidney and Urological Systems Integrated Review Group; Clinical, Integrative and Molecular Gastroenterology Study Section.
Date: June 3, 2013.
Time: 8:00 a.m. to 7:00 p.m.
Agenda: To review and evaluate grant applications.
Place: Hotel Rex, 562 Sutter Street, San Francisco, CA 94102.
Contact Person: Mushtaq A Khan, Ph.D., Scientific Review Officer, Center for Scientific Review, National Institutes of Health, 6701 Rockledge Drive, Room 2176, MSC 7818, Bethesda, MD 20892, 301–435–1778, *khanm@csr.nih.gov*.

Name of Committee: Cell Biology Integrated Review Group; Development—2 Study Section.
Date: June 3, 2013.
Time: 8:00 a.m. to 5:30 p.m.
Agenda: To review and evaluate grant applications.
Place: Hilton Long Beach and Executive Center, 701 West Ocean Boulevard, Long Beach, CA 90831.
Contact Person: Rass M Shayiq, Ph.D., Scientific Review Officer, Center for Scientific Review, National Institute of Health, 6701 Rockledge Drive, Room 2182, MSC 7818, Bethesda, MD 20892, (301) 435–2359, *shayiqr@csr.nih.gov*.

Name of Committee: Musculoskeletal, Oral and Skin Sciences Integrated Review Group; Skeletal Biology Development and Disease Study Section.
Date: June 3, 2013.
Time: 8:00 a.m. to 6:00 p.m.
Agenda: To review and evaluate grant applications.
Place: Embassy Suites Alexandria, 1900 Diagonal Road, Alexandria, VA 22314.
Contact Person: Priscilla B Chen, Ph.D., Scientific Review Officer, Center for Scientific Review, National Institutes of Health, 6701 Rockledge Drive, Room 4104, MSC 7814, Bethesda, MD 20892, (301) 435–1787, *chenp@csr.nih.gov*.

Name of Committee: Risk, Prevention and Health Behavior Integrated Review Group; Behavioral Medicine, Interventions and Outcomes Study Section.
Date: June 3–4, 2013.
Time: 8:00 a.m. to 5:00 p.m.
Agenda: To review and evaluate grant applications.
Place: Marriott Wardman Park Washington DC Hotel, 2660 Woodley Road NW., Washington, DC 20008.
Contact Person: Lee S Mann, Ph.D., Scientific Review Officer, Center for Scientific Review, National Institutes of Health, 6701 Rockledge Drive, Room 3186, MSC 7848, Bethesda, MD 20892, 301–435–0677, *mannl@csr.nih.gov*.

Name of Committee: Cardiovascular and Respiratory Sciences Integrated Review Group; Lung Cellular, Molecular, and Immunobiology Study Section.
Date: June 3–4, 2013.
Time: 8:00 a.m. to 6:00 p.m.
Agenda: To review and evaluate grant applications.
Place: Admiral Fell Inn, 888 South Broadway, Baltimore, MD 21231.
Contact Person: George M Barnas, Ph.D., Scientific Review Officer, Center for Scientific Review, National Institutes of Health, 6701 Rockledge Drive, Room 2180, MSC 7818, Bethesda, MD 20892, 301–435–0696, *barnasg@csr.nih.gov*.

Name of Committee: Genes, Genomes, and Genetics Integrated Review Group; Prokaryotic Cell and Molecular Biology Study Section.
Date: June 3, 2013.
Time: 11:00 a.m. to 6:00 p.m.
Agenda: To review and evaluate grant applications.
Place: National Institutes of Health, 6701 Rockledge Drive, Bethesda, MD 20892 (Virtual Meeting).
Contact Person: Dominique Lorang-Leins, Ph.D., Scientific Review Officer, National Institutes of Health, Center for Scientific Review, 6701 Rockledge Drive, Room 5108, MSC 7766, Bethesda, MD 20892, 301–326–9721, *Lorangd@mail.nih.gov*.

(Catalogue of Federal Domestic Assistance Program Nos. 93.306, Comparative Medicine; 93.333, Clinical Research, 93.306, 93.333, 93.337, 93.393–93.396, 93.837–93.844, 93.846-93.878, 93.892, 93.893, National Institutes of Health, HHS)

Dated: April 30, 2013.

Michelle Trout,

Program Analyst, Office of Federal Advisory Committee Policy.

[FR Doc. 2013–10572 Filed 5–3–13; 8:45 am]

BILLING CODE 4140–01–P

DEPARTMENT OF HEALTH AND HUMAN SERVICES

National Institutes of Health

National Cancer Institute; Notice of Closed Meetings

Pursuant to section 10(d) of the Federal Advisory Committee Act, as amended (5 U.S.C. App.), notice is hereby given of the following meetings.

The meetings will be closed to the public in accordance with the provisions set forth in sections 552b(c)(4) and 552b(c)(6), Title 5 U.S.C., as amended. The grant applications and the discussions could disclose confidential trade secrets or commercial property such as patentable material, and personal information concerning individuals associated with the grant applications, the disclosure of which would constitute a clearly unwarranted invasion of personal privacy.

Name of Committee: National Cancer Institute Special Emphasis Panel; P01 Review Panel 3.

Date: June 4, 2013.

Time: 1:00 p.m. to 4:00 p.m.

Agenda: To review and evaluate grant applications.

Place: National Cancer Institute, Shady Grove West Tower, 9609 Medical Center Drive, Room 7W030, Rockville, MD 20850 (Telephone Conference Call).

Contact Person: David G. Ransom, Ph.D., Scientific Review Officer, Research Programs Review Branch, Division of Extramural Activities, National Cancer Institute, NIH, 9609 Medical Center Drive, Room 7W124, Rockville, MD 20850, 240–276–6351, *david.ransom@nih.gov*.

Name of Committee: National Cancer Institute Special Emphasis Panel; NCI SPORE and R01 Review.

Date: June 5–6, 2013.

Time: 8:00 a.m. to 12:00 p.m.

Agenda: To review and evaluate grant applications.

Place: Gaithersburg Marriott Washingtonian Center, 9751 Washingtonian Boulevard, Gaithersburg, MD 20878.

Contact Person: David G. Ransom, Ph.D., Scientific Review Officer, Research Programs Review Branch, Division of Extramural Activities, National Cancer Institute, NIH, 9609 Medical Center Drive, Room 7W124, Rockville, MD 20850, 240–276–6351, *david.ransom@nih.gov*.

Name of Committee: National Cancer Institute Special Emphasis Panel; Comprehensive Partnerships to Advance Cancer Health Equity.

Date: June 11–12, 2013.

Time: 8:00 a.m. to 4:00 p.m.

Agenda: To review and evaluate grant applications.

Place: Hilton Garden Inn and Homewood Suites, 14975 Shady Grove Road, Rockville, MD 20850.

Contact Person: Gerald G. Lovinger, Ph.D., Scientific Review Officer, Special Review and Logistics Branch, Division of Extramural Activities, National Cancer Institute, NIH, 9609 Medical Center Drive, Room 7W266, Bethesda, MD 20892–9750, 240–276–6385, *lovingeg@mail.nih.gov*.

Name of Committee: National Cancer Institute Special Emphasis Panel; Quantitative Imaging for the Evaluation of Responses to Cancer Therapies.

Date: June 20, 2013.

Time: 11:00 a.m. to 4:00 p.m.

Agenda: To review and evaluate grant applications.

Place: National Institutes of Health, Shady Grove West Tower, 9606 Medical Center Drive, Room 3W034, Rockville, MD 20852 (Telephone Conference Call).

Contact Person: Kenneth L. Bielat, Ph.D., Scientific Review Officer, Special Review and Logistics Branch, Division of Extramural Activities, National Cancer Institute, 9609 Medical Center Drive, Room 7W244, Bethesda, MD 20892–9750, 240–276–6373, *bielatk@mail.nih.gov*.

Name of Committee: National Cancer Institute Special Emphasis Panel; Cancer Mechanism and Population Science.

Date: June 20–21, 2013.

Time: 3:00 p.m. to 6:00 p.m.

Agenda: To review and evaluate grant applications.

Place: Hilton Washington/Rockville, 1750 Rockville Pike, Rockville, MD 20852.

Contact Person: Joyce C. Pegues, Ph.D., Scientific Review Officer, Special Review and Logistics Branch, Division of Extramural Activities, National Cancer Institute, NIH, 9609 Medical Center Drive, Room 7W248, Rockville, MD 20850, 240–276–6375, *peguesj@mail.nih.gov*.

Name of Committee: National Cancer Institute Special Emphasis Panel; Core Infrastructure and Methodological Research for Cancer Epidemiology Cohorts.

Date: June 25, 2013.

Time: 11:00 a.m. to 4:00 p.m.

Agenda: To review and evaluate grant applications.

Place: National Institutes of Health, Shady Grove West Tower, 9606 Medical Center Drive, Room 7W034, Rockville, MD 20850 (Telephone Conference Call).

Contact Person: Kenneth L. Bielat, Ph.D., Scientific Review Officer, Special Review and Logistics Branch, Division of Extramural Activities, National Cancer Institute, 9609 Medical Center Drive, Room 7W244, Bethesda, MD 20892–9750, 240–276–6373, *bielatk@mail.nih.gov*.

Name of Committee: National Cancer Institute Special Emphasis Panel; NCI Exploratory/Developmental Research Grant Program (NCI Omnibus R21).

Date: June 27–28, 2013.

Time: 8:00 a.m. to 6:00 p.m.

Agenda: To review and evaluate grant applications.

Place: Bethesda North Marriott Hotel & Conference Center, 5701 Marinelli Road, Bethesda, MD 20852.

Contact Person: Clifford W Schweinfest, Ph.D., Scientific Review Officer, Special Review and Logistics Branch, Division of Extramural Activities, National Cancer Institute, 9609 Medical Center Drive, Room 7W108, Bethesda, MD 20892–9750, 240–276–6378, *schweinfestcw@mail.nih.gov*.

Name of Committee: National Cancer Institute Special Emphasis Panel; R21–IMAT.

Date: July 10–11, 2013.

Time: 8:00 a.m. to 12:00 p.m.

Agenda: To review and evaluate grant applications.

Place: Bethesda North Marriott Hotel & Conference Center, 5701 Marinelli Road, Bethesda, MD 20852.

Contact Person: Jeffrey E. DeClue, Ph.D., Scientific Review Officer, Special Review and Logistics Branch, Division of Extramural Activities, National Cancer Institute, NIH, 9609 Medical Center Drive, Room 7W238, Bethesda, MD 20892–9750, 240–276–6371, *decluej@mail.nih.gov*.

Name of Committee: National Cancer Institute Special Emphasis Panel; Small Grants Program for Cancer Epidemiology.

Date: July 18–19, 2013.

Time: 3:00 p.m. to 6:00 p.m.

Agenda: To review and evaluate grant applications.

Place: Hilton Washington DC/Rockville, 1750 Rockville Pike, Rockville, MD 20852.

Contact Person: Joyce C. Pegues, Ph.D., Scientific Review Officer, Special Review and Logistics Branch, Division of Extramural Activities, National Cancer Institute, NIH, 9609 Medical Center Drive, Room 7W248, Rockville, MD 20850, 240–276–6375, *peguesj@mail.nih.gov*.

(Catalogue of Federal Domestic Assistance Program Nos. 93.392, Cancer Construction; 93.393, Cancer Cause and Prevention Research; 93.394, Cancer Detection and Diagnosis Research; 93.395, Cancer Treatment Research; 93.396, Cancer Biology Research; 93.397, Cancer Centers Support; 93.398, Cancer Research Manpower; 93.399, Cancer Control, National Institutes of Health, HHS)

Dated: April 30, 2013.

Melanie J. Gray,

Program Analyst, Office of Federal Advisory Committee Policy.

[FR Doc. 2013–10574 Filed 5–3–13; 8:45 am]

BILLING CODE 4140–01–P

DEPARTMENT OF HOMELAND SECURITY

Coast Guard

[Docket No. USCG–2013–0286]

Proposal To Replace the Existing Movable I–5 Bridge Across the Columbia River With a Fixed Multi-use Bridge Which Will Accommodate Vehicular, Light Rail, Pedestrian and Bicycle Traffic and Will Be Called the Columbia River Crossing; Application Availability

AGENCY: Coast Guard, DHS.

ACTION: Notice of availability and request for comments; notice of public meetings.

SUMMARY: The Coast Guard, under its General Bridge Act of 1946 permit authority, announces the availability of a bridge permit application submitted by Columbia River Crossing (CRC). CRC's proposed project includes a new fixed bridge that will cross the Columbia River adjacent to the existing Interstate 5 bridge connecting Portland, Oregon and Vancouver, Washington. This new fixed bridge will provide 116 feet of vertical clearance above Columbia River Datum to accommodate waterway users. In addition to vehicular, bicycle, and pedestrian traffic, the proposed bridge will carry a light rail line that will extend Portland's light rail service into Vancouver, Washington.

Through this notice, the Coast Guard is soliciting your input on the potential impacts to navigation as a result of the proposed project in order to determine whether the proposal meets the reasonable needs of navigation.

DATES: Comments and related material must either be submitted to our online docket via *http://www.regulations.gov* on or before June 20, 2013 or reach the Docket Management Facility by that date.

Public meetings on the proposed CRC bridge will be held on Tuesday, June 4, 2013, and Wednesday, June 5, 2013. If you wish to request an oral or sign language interpreter, we must receive your request for one on or before May 26, 2013.

ADDRESSES: You may submit comments identified by docket number USCG–2013–0286 using any one of the following methods:

(1) *Federal eRulemaking Portal: http://www.regulations.gov.*

(2) *Fax:* 202–493–2251.

(3) *Mail:* Docket Management Facility (M–30), U.S. Department of Transportation, West Building Ground Floor, Room W12–140, 1200 New Jersey Avenue SE., Washington, DC 20590–0001.

(4) *Hand delivery:* Same as mail address above, between 9 a.m. and 5 p.m., Monday through Friday, except Federal holidays. The telephone number is 202–366–9826.

To avoid duplication, please use only one of these four methods. See the ''Public Participation and Request for Comments'' portion of the **SUPPLEMENTARY INFORMATION** section below for instructions on submitting comments.

The public meetings will be held on Tuesday, June 4, 2013, from 5 p.m. to 8 p.m. at the Red Lion Hotel on the River, 909 N Hayden Island Drive, Portland, Oregon and on Wednesday, June 5, 2013, from 5 p.m. to 8 p.m. at the Hilton Vancouver, 301 West 6th St, Vancouver, Washington.

FOR FURTHER INFORMATION CONTACT: If you have questions on this notice or the public meetings, call or email Mr. Gary Greene, CRC Project Officer, Thirteenth Coast Guard District, U.S. Coast Guard; telephone 206–220–7079, *Gary.f.greene@uscg.mil.* If you have questions on viewing or submitting material to the docket, call Barbara Hairston, Program Manager, Docket Operations, telephone 202–366–9826.

SUPPLEMENTARY INFORMATION:

Public Participation and Request for Comments

We encourage you to submit comments and related material on the proposed CRC Bridge. All comments received, including comments received at the public meetings, will be posted, without change, to *http://www.regulations.gov* and will include any personal information you have provided.

Submitting comments: If you submit a comment, please include the docket number for this notice (USCG–2013–0286) and provide a reason for each suggestion or recommendation. You may submit your comments and material online, or by fax, mail or hand delivery, but please use only one of these means. We recommend that you include your name and a mailing address, an email address, or a telephone number in the body of your document so that we can contact you if we have questions regarding your submission.

To submit your comment online, go to *http://www.regulations.gov*, insert (USCG–2013–0286) in the Search box, look for this notice in the docket and click the Comment button next to it. If you submit your comments by mail or hand delivery, submit them in an unbound format, no larger than 8½ by 11 inches, suitable for copying and electronic filing. If you submit them by mail and would like to know that they reached the Facility, please enclose a stamped, self-addressed postcard or envelope. We will consider all comments and material received during the comment period.

Viewing the comments: To view the comments go to *http://www.regulations.gov*, insert (USCG–2013–0286) in the Search box, then click on the ''Open Docket Folder'' option. If you do not have access to the internet, you may view the docket by visiting the Docket Management Facility in Room W12–140 on the ground floor of the Department of Transportation West Building, 1200 New Jersey Avenue SE., Washington, DC 20590, between 9 a.m. and 5 p.m., Monday through Friday, except Federal holidays. We have an agreement with the Department of Transportation to use the Docket Management Facility.

Copies of all written communications from the public meetings will be available for review by interested persons after the meeting on the online docket, USCG–2013–0286 via *http://www.regulations.gov.*

Transcripts of the meetings will be available for public review approximately 30 days after the meetings. All comments will be made part of the public docket.

Privacy Act: Anyone can search the electronic form of comments received into any of our dockets by the name of the individual submitting the comment (or signing the comment, if submitted on behalf of an association, business, labor union, etc.). You may review a Privacy Act, system of records notice regarding our public dockets in the January 17, 2008, issue of the **Federal Register** (73 FR 3316).

Background and Purpose

CRC is an entity formed by the Oregon Department of Transportation and the Washington Department of Transportation, for the purpose of improving the Interstate 5 (I–5) corridor between Portland, Oregon and Vancouver, Washington. CRC has proposed to replace the I–5 Bridge across navigable waters of the United States by replacing the existing lift bridge with a fixed bridge providing a vertical clearance of 116 feet above Columbia River Datum. A description of the project (including related bridge permit application documents) and how it would be completed can be found at the project's Web site: *http://www.columbiarivercrossing.org/.*

The proposed bridge project has been identified as a nationally or regionally significant project under Executive Order 13604, which requires agencies to coordinate and expedite the permitting and environmental review process for specific projects. The existing bridge is a lift bridge, which provides a vertical navigational clearance of 178 feet above the Columbia River Datum. The applicant, CRC, proposes to decrease the vertical navigational clearance to 116 feet above the Columbia River Datum by building a fixed bridge.

As a structure over navigable waters of the United States, the proposed bridge requires a Coast Guard Bridge Permit pursuant to the General Bridge Act of 1946 (33 U.S.C. 525–533). As such, we are requesting your comments on potential impacts to navigation related to the project. A Navigation Impact Report (NIR) was submitted by CRC to the Coast Guard as part of the bridge application. The NIR concluded that a number of waterway users will be impacted by the proposed project. As mitigation negotiations between the impacted users and CRC remain ongoing, the Coast Guard must consider them burdened users in its determination of the reasonable needs of navigation. In addition to the reduced vertical clearance proposed by CRC, the upper turning basin, located immediately downstream of the existing bridge, will be permanently reduced approximately eighteen percent due to the location of the proposed structures.

During construction, CRC proposes to temporarily reduce the vertical and horizontal clearances by varying amounts for approximately five years. Specifically, for 21 months, both barge channels will be completely blocked, requiring a bridge lift for any vertical clearance greater than 39 feet above Columbia River Datum. Following that time period, for an additional 27 months, the vertical clearance will be restricted to approximately 100 feet above Columbia River Datum. The U.S. Army Corps of Engineers (USACE) is reviewing a proposal by CRC to realign the federal channel to accommodate the proposed project. A ship simulation will be conducted by the USACE in early fall 2013 to determine the impact on the navigation channel during and after construction of the proposed project.

Our publication of this notice begins a 45-day comment period and provides information on how to participate in the process. The process includes an opportunity to submit comment via the docket as outlined below, or through oral comments at two public meetings. The Bridge Permit Application, Navigation Impact Report, and other materials referenced here, as well as additional documents available to assist the public during this comment period, are available on the Columbia River Crossing Web site at *http://www.columbiarivercrossing.org/Library/Type.aspx?CategoryID=13.*

The Coast Guard will hold two public meetings on the CRC application (one in Portland, Oregon and one in Vancouver, Washington) to provide an opportunity for oral comments. The specific times and locations are as follows:

(1) The first public meeting will be held on Tuesday, June 4, 2013, from 5 p.m. to 8 p.m. at the Red Lion Hotel on the River, 909 N Hayden Island Drive, Portland, Oregon

(2) The second public meeting will be held on Wednesday, June 5, 2013, from 5 p.m. to 8 p.m. at the Hilton Vancouver, 301 West 6th St, Vancouver, Washington.

The purpose of these meetings is to consider an application submitted by CRC for Coast Guard approval of the proposed bridge across the Columbia River, mile 106.5, between Portland, Oregon and Vancouver, Washington. All interested parties may present data, views and comments, orally or in writing, concerning the impact of the proposed bridge project on navigation.

The public meetings will be informal. A representative of the Coast Guard will preside, make a brief opening statement and announce the procedure to be followed at the meetings. Attendees who request an opportunity to present oral comments at a public meeting must sign up to speak at the meeting site at the designated time of the meeting. Speakers will be called in the order of receipt of the request. Attendees at the meetings who wish to present oral comment, and have not previously made a request to do so, will follow those having submitted a request, as time permits. All oral presentations will be limited to three minutes. The public meetings may end early if all present wishing to speak have done so. Any oral comments provided at the meetings will be transcribed and placed into the docket by the Coast Guard. Written comments and related material may also be submitted to Coast Guard personnel specified at that meeting for placement into the docket by the Coast Guard.

Information on Services for Individuals With Disabilities

For information on facilities or services for individuals with disabilities or to request special assistance at the public meeting, contact Mr. Gary Greene, CRC Project Officer, U.S. Coast Guard, at the telephone number or email address indicated under the **FOR FURTHER INFORMATION CONTACT** section of this notice. Any requests for an oral or sign language interpreter must be received on or before May 26, 2013.

Authority

This notice is issued under authority of 33 U.S.C. 525 and 401(1), 33 CFR 115.60, and DHS Delegation 0170.1(67).

Dated: May 1, 2013.

Brian L. Dunn,

Administrator, Office of Bridge Programs, U.S. Coast Guard.

[FR Doc. 2013–10685 Filed 5–1–13; 4:15 pm]

BILLING CODE 9110–04–P

DEPARTMENT OF HOMELAND SECURITY

Federal Emergency Management Agency

[Internal Agency Docket No. FEMA–4108–DR; Docket ID FEMA–2013–0001]

Maine; Amendment No. 1 to Notice of a Major Disaster Declaration

AGENCY: Federal Emergency Management Agency, DHS.

ACTION: Notice.

SUMMARY: This notice amends the notice of a major disaster declaration for the State of Maine (FEMA–4108–DR), dated March 25, 2013, and related determinations.

DATES: *Effective Date:* April 30, 2013.

FOR FURTHER INFORMATION CONTACT: Dean Webster, Office of Response and Recovery, Federal Emergency Management Agency, 500 C Street SW., Washington, DC 20472, (202) 646–2833.

SUPPLEMENTARY INFORMATION: The notice of a major disaster declaration for the State of Maine is hereby amended to include the following areas among those areas determined to have been adversely affected by the event declared a major disaster by the President in his declaration of March 25, 2013.

Sagadahoc and Washington Counties for Public Assistance.

Sagadahoc and Washington Counties for snow assistance under the Public Assistance program for any continuous 48-hour period during or proximate to the incident period.

The following Catalog of Federal Domestic Assistance Numbers (CFDA) are to be used for reporting and drawing funds: 97.030, Community Disaster Loans; 97.031, Cora Brown Fund; 97.032, Crisis Counseling; 97.033, Disaster Legal Services; 97.034, Disaster Unemployment Assistance (DUA); 97.046, Fire Management Assistance Grant; 97.048, Disaster Housing Assistance to Individuals and Households in Presidentially Declared Disaster Areas; 97.049, Presidentially Declared Disaster Assistance—

Disaster Housing Operations for Individuals and Households; 97.050 Presidentially Declared Disaster Assistance to Individuals and Households—Other Needs; 97.036, Disaster Grants—Public Assistance (Presidentially Declared Disasters); 97.039, Hazard Mitigation Grant.

W. Craig Fugate,

Administrator, Federal Emergency Management Agency.

[FR Doc. 2013–10598 Filed 5–3–13; 8:45 am]

BILLING CODE 9111–23–P

DEPARTMENT OF HOMELAND SECURITY

U.S. Customs and Border Protection

[Docket No. USCBP–2013–0016]

Advisory Committee on Commercial Operations of Customs and Border Protection (COAC)

AGENCY: U.S. Customs and Border Protection, Department of Homeland Security (DHS).

ACTION: Committee Management; Notice of Federal Advisory Committee Meeting.

SUMMARY: The Advisory Committee on Commercial Operations of Customs and Border Protection (COAC) will meet on May 22, 2013, in Washington, DC. The meeting will be open to the public.

DATES: COAC will meet on Wednesday, May 22, 2013, from 1:00 p.m. to 4:30 p.m. e.s.t. Please note that the meeting may close early if the committee has completed its business.

Pre-Registration: Meeting participants may attend either in person or via webinar after pre-registering using a method indicated below:

—For members of the public who plan to attend the meeting in person, please register either online at *https://apps.cbp.gov/te_registration/?w=5;* by email to *tradeevents@dhs.gov*; or by fax to 202–325–4290 by 5:00 p.m. e.s.t. on May 20, 2013.

—For members of the public who plan to participate via webinar, please register online at *https://apps.cbp.gov/te_registration/?w=6* by 5:00 p.m. e.s.t. on May 20, 2013.

Feel free to share this information with other interested members of the organization or association. Members of the public that are pre-registered and later require cancellation, kindly do so in advance of the meeting by accessing one of the following links: *https://apps.cbp.gov/te_registration/cancel.asp?w=5* to cancel an in person registration or*https://apps/cbp.gov/te_registration/cancel.asp?w=6* to cancel a webinar registration.

ADDRESSES: The meeting will be held at the U.S. International Trade Commission (USITC) in Main Hearing Room 101, 500 E Street SW., Washington, DC 20436. All visitors to the USITC Building must show a state-issued ID or Passport to proceed through the security checkpoint for admittance to the building.

For information on facilities or services for individuals with disabilities or to request special assistance at the meeting, contact Ms. Wanda Tate, Office of Trade Relations, U.S. Customs and Border Protection at 202–344–1661 as soon as possible.

To facilitate public participation, we are inviting public comment on the issues to be considered by the committee prior to the formulation of recommendations as listed in the ''Agenda'' section below.

Comments must be submitted in writing no later than May 13, 2013, and must be identified by USCBP–2013–0016 and may be submitted by *one* of the following methods:

- *Federal eRulemaking Portal: http://www.regulations.gov.* Follow the instructions for submitting comments.
- *Email: Tradeevents@dhs.gov.* Include the docket number in the subject line of the message.
- *Fax:* 202–325–4290
- *Mail:* Ms. Wanda Tate, Office of Trade Relations, U.S. Customs and Border Protection, 1300 Pennsylvania Avenue NW., Room 3.5A, Washington, DC 20229.

Instructions: All submissions received must include the words ''Department of Homeland Security'' and the docket number for this action. Comments received will be posted without alteration at *http://www.regulations.gov*, including any personal information provided. Do not submit personal information to this docket.

Docket: For access to the docket to read background documents or comments received by the COAC, go to *http://www.regulations.gov.*

There will be three public comment periods held during the meeting on May 22, 2013. Speakers are requested to limit their comments to two (2) minutes or less to facilitate greater participation. Contact the individual listed below to register as a speaker. Please note that the public comment period for speakers may end before the time indicated on the schedule that is posted on the CBP Web page at the time of the meeting.

FOR FURTHER INFORMATION CONTACT: Ms. Wanda Tate, Office of Trade Relations, U.S. Customs and Border Protection, 1300 Pennsylvania Avenue NW., Room 3.5A, Washington, DC 20229; telephone 202–344–1440; facsimile 202–325–4290.

SUPPLEMENTARY INFORMATION: Notice of this meeting is given under the *Federal Advisory Committee Act,* 5 U.S.C. App. (Pub. L. 92–463). The COAC provides advice to the Secretary of Homeland Security, the Secretary of the Treasury, and the Commissioner of U.S. Customs and Border Protection (CBP) on matters pertaining to the commercial operations of CBP and related functions within DHS and the Department of the Treasury.

Agenda

The COAC will hear from the following project leaders and subcommittees on the topics listed below and then will review, deliberate, provide observations and formulate recommendations on how to proceed on those topics:

1. Review, Discuss, and Approve the COAC Annual Trade Efficiency Survey for distribution by June 2013 and discuss feedback on past COAC recommendations.
2. Review and Discuss Next Steps regarding the Exports Subcommittee and the Work Completed by the Export Mapping Working Group (EMWG) to date.
3. Review and Discuss the Global Supply Chain Subcommittee's Air Cargo Advance Screening (ACAS) Working Group and address Next Steps regarding Land Border issues in the area of Beyond the Border and 21st Century Initiatives.
4. Review and Discuss Next Steps of the Trusted Trader Subcommittee and the Work Completed by the Industry Standards Working Group (ISWG) and the Trusted Trader Measures Working Group.
5. Review and Discuss Next steps regarding the One U.S. Government at the Border Subcommittee and the work to date on the Food and Drug Administration (FDA) Working Group and the Environmental Protection Agency (EPA) Working Group.
6. Review and Discuss Next Steps of the Trade Modernization Subcommittee which will address the Automated Commercial Environment vendor survey results and the analysis of the Centers of Excellence and Expertise (CEE) survey.
7. Review and Discuss Next Steps of the Trade Enforcement and Revenue Collection Subcommittee and the Work Completed to date on the Regulatory Audit Working Group's findings on the planned enhancements for the Focused Assessment process and the Intellectual Property Rights Working Group's effort to further evaluate the use of the Global Shipment Identification Number (GSIN) as a possible tool for use in Distribution

Chain Management in Intellectual Property Rights Compliance.

Dated: April 30, 2013.

Maria Luisa Boyce,

Senior Advisor for Private Sector Engagement, Office of Trade Relations.

[FR Doc. 2013–10647 Filed 5–3–13; 8:45 am]

BILLING CODE 9111–14–P

DEPARTMENT OF HOUSING AND URBAN DEVELOPMENT

[Docket No. FR–5703–N–01]

Annual Indexing of Basic Statutory Mortgage Limits for Multifamily Housing Programs

AGENCY: Office of the Assistant Secretary for Housing—Federal Housing Commissioner, HUD.

ACTION: Notice.

SUMMARY: In accordance with Section 206A of the National Housing Act, HUD has adjusted the Basic Statutory Mortgage Limits for Multifamily Housing Programs for Calendar Year 2013.

DATES: *Effective Date:* January 1, 2013.

FOR FURTHER INFORMATION CONTACT: Thomas L. Goade, Director, Technical Support Division, Office of Multifamily Development, Office of Housing, Department of Housing and Urban Development, 451 Seventh Street SW., Washington, DC 20410–8000, telephone (202) 402–2727 (this is not a toll-free number). Hearing or speech-impaired individuals may access this number through TTY by calling the toll-free Federal Relay Service at (800) 877–8339.

SUPPLEMENTARY INFORMATION: The FHA Downpayment Simplification Act of 2002 (Pub. L. 107–326, approved December 4, 2002) amended the National Housing Act by adding a new Section 206A (12 U.S.C. 1712a). Under Section 206A, the following sections of the National Housing Act are affected:

I. Section 207(c)(3)(A) (12 U.S.C. 1713(c)(3)(A));

II. Section 213(b)(2)(A) (12 U.S.C. 1715e (b)(2)(A));

III. Section 220(d)(3)(B)(iii)(I) (12 U.S.C. 1715k (d)(3)(B)(iii)(I));

IV. Section 221(d)(4)(ii)(I) (12 U.S.C. 1715l(d)(4)(ii)(I));

V. Section 231(c)(2)(A) (12 U.S.C. 1715v(c)(2)(A)); and

VI. Section 234(e)(3)(A) (12 U.S.C. 1715y(e)(3)(A)).

The dollar amounts in these sections are the base per unit statutory limits for FHA's multifamily mortgage programs collectively referred to as the ''Dollar Amounts.'' They are adjusted annually (commencing in 2004) on the effective date of the Consumer Financial Protection Bureau's adjustment of the $400 figure in the Home Ownership and Equity Protection Act of 1994 (HOEPA) (Pub. L. 103–325, approved September 23, 1994). The adjustment of the Dollar Amounts shall be calculated using the percentage change in the Consumer Price Index for All Urban Consumers (CPI–U) as applied by the Consumer Financial Protection Bureau for purposes of the above-described HOEPA adjustment.

HUD has been notified of the percentage change in the CPI–U used for the HOEPA adjustment and the effective date of the HOEPA adjustment. The percentage change in the CPI–U is 2.3% and the effective date of the HOEPA adjustment is January 1, 2013. The Dollar Amounts have been adjusted correspondingly and have an effective date of January 1, 2013.

The adjusted Dollar Amounts for Calendar Year 2013 are shown below:

Basic Statutory Mortgage Limits for Calendar Year 2013

Multifamily Loan Program

- Section 207—Multifamily Housing
- Section 207 pursuant to Section 223(f)—Purchase or Refinance Housing
- Section 220—Housing in Urban Renewal Areas

Bedrooms	Non-Elevator	Elevator
0	$48,646	56,134
1	53,887	62,869
2	64367	77,091
3	79,336	96,552
4+	89,818	109,173

- Section 213—Cooperatives

Bedrooms	Non-Elevator	Elevator
0	$52,719	56,134
1	60,785	63,598
2	73,310	77,335
3	93,837	100,047
4+	104,540	109,823

- Section 234—Condominium Housing

Bedrooms	Non-Elevator	Elevator
0	$53,795	56,611
1	62,026	64,897
2	74,805	78,914
3	95,753	102,089
4+	106,673	112,062

- Section 221(d)(4)—Moderate Income Housing

Bedrooms	Non-Elevator	Elevator
0	$48,413	52,296
1	54,955	59,951
2	66,427	72,900
3	83,378	94,308
4+	94,482	103,522

- Section 231—Housing for the Elderly

Bedrooms	Non-Elevator	Elevator
0	$46,029	52,296
1	51,456	59,951
2	61,446	72,900
3	73,947	94,308
4+	86,937	103,522

- Section 207—Manufactured Home Parks

Per Space—$22,333

Dated: April 30, 2013.

Carol J. Galante,

Assistant Secretary for Housing—Federal Housing Commissioner.

[FR Doc. 2013–10676 Filed 5–3–13; 8:45 am]

BILLING CODE 4210–67–P

DEPARTMENT OF THE INTERIOR

[A1R–17549897–100–00–0–0, CUPCA00]

Environmental Assessment of the Proposed Increase in Operation, Maintenance and Replacement Activities Associated With the Wasatch County Water Efficiency Project

AGENCY: Central Utah Project Completion Act Office, Interior.

ACTION: Notice of intent.

SUMMARY: Pursuant to Section 102(2)(c) of the National Environmental Policy Act of 1969, as amended, the Department of the Interior, the Central Utah Water Conservancy District, and the Utah Reclamation Mitigation and Conservation Commission, as joint leads, are initiating an Environmental Assessment of potential impacts associated with a proposed change in Operation, Maintenance and Replacement activities associated with the Wasatch County Water Efficiency Project (WCWEP). The WCWEP Operation, Maintenance, and Replacement Proposed Action includes: stabilizing canal banks; lining, piping, or enclosing the canals for safety and continued efficiency; improving access; and updating pump stations and regulating ponds to accommodate the changing pattern of water demand and increased urbanization.

DATES: Date and location for public scoping will be announced locally.

FOR FURTHER INFORMATION CONTACT: Mr. Lee Baxter at (801) 379–1174, or by email at *lbaxter@usbr.gov.*

Dated: April 30, 2013.

Reed R. Murray,

Program Director, Central Utah Project Completion Act, Department of the Interior.

[FR Doc. 2013–10675 Filed 5–3–13; 8:45 am]

BILLING CODE 4310–MN–P

DEPARTMENT OF THE INTERIOR

Fish and Wildlife Service

[FWS–R6–ES–2013–N099; FXES11130600000D2–123–FF06E00000]

Endangered and Threatened Wildlife and Plants; Recovery Permit Applications

AGENCY: Fish and Wildlife Service, Interior.

ACTION: Notice of availability; request for comments.

SUMMARY: We, the U.S. Fish and Wildlife Service, invite the public to comment on the following application to conduct certain activities with endangered or threatened species. With some exceptions, the Endangered Species Act of 1973, as amended (Act), prohibits activities with endangered and threatened species unless a Federal permit allows such activity. The Act requires that we invite public comment before issuing these permits.

DATES: To ensure consideration, please send your written comments by June 5, 2013.

ADDRESSES: You may submit comments or requests for copies or more information by any of the following methods. Alternatively, you may use one of the following methods to request hard copies or a CD–ROM of the documents. Please specify the permit you are interested in by number (e.g., Permit No. TE–106387).

- *Email:* permitsR6ES@fws.gov. Please refer to the respective permit number (e.g., Permit No. TE–106387) in the subject line of the message.
- *U.S. Mail:* Ecological Services, U.S. Fish and Wildlife Service, P.O. Box 25486–DFC, Denver, CO 80225
- *In-Person Drop-off, Viewing, or Pickup:* Call (303) 236–4212 to make an appointment during regular business hours at 134 Union Blvd., Suite 645, Lakewood, CO 80228.

FOR FURTHER INFORMATION CONTACT: Kathy Konishi, Permit Coordinator Ecological Services, (303) 236–4212 (phone); *permitsR6ES@fws.gov* (email).

SUPPLEMENTARY INFORMATION:

Background

The Act (16 U.S.C. 1531 *et seq.*) prohibits activities with endangered and threatened species unless a Federal permit allows such activity. Along with our implementing regulations in the Code of Federal Regulations (CFR) at 50 CFR part 17, the Act provides for permits, and requires that we invite public comment before issuing these permits.

A permit granted by us under section 10(a)(1)(A) of the Act authorizes the permittee to conduct activities with United States endangered or threatened species for scientific purposes, enhancement of propagation or survival, or interstate commerce (the latter only in the event that it facilitates scientific purposes or enhancement of propagation or survival). Our regulations implementing section 10(a)(1)(A) for these permits are found at 50 CFR 17.22 for endangered wildlife species, 50 CFR 17.32 for threatened wildlife species, 50 CFR 17.62 for endangered plant species, and 50 CFR 17.72 for threatened plant species.

Application Available for Review and Comment

We invite local, State, and Federal agencies, and the public to comment on the following application. Documents and other information the applicant has submitted are available for review, subject to the requirements of the Privacy Act (5 U.S.C. 552a) and Freedom of Information Act (5 U.S.C. 552).

Permit Application Number: TE–106387

Applicant: U.S. Forest Service, Bridger-Teton National Forest, P.O. Box 220, 29 E. Freemont Lake Road, Pinedale, WY 82941

The applicant requests the renewal of an existing permit to take (capture, handle, and release) Kendall Warm Springs dace (*Rhinichthys osculus thermalis*) under permit TE–106387 for the purpose of enhancing the species' survival.

National Environmental Policy Act

In compliance with the National Environmental Policy Act (42 U.S.C. 4321 *et seq.*), we have made an initial determination that the proposed activities in this permit are categorically excluded from the requirement to prepare an environmental assessment or environmental impact statement (516 DM 6 Appendix 1, 1.4C(1)).

Public Availability of Comments

All comments and materials we receive in response to this request will be available for public inspection, by appointment, during normal business hours at the address listed in the **ADDRESSES** section of this notice.

Before including your address, phone number, email address, or other personal identifying information in your comment, you should be aware that your entire comment—including your personal identifying information—may be made publicly available at any time. While you can ask us in your comment to withhold your personal identifying information from public review, we cannot guarantee that we will be able to do so.

Authority

We provide this notice under section 10 of the Act (16 U.S.C. 1531 *et seq.*).

Dated: April 30, 2013.

Michael G. Thabault,

Assistant Regional Director, Mountain-Prairie Region.

[FR Doc. 2013–10669 Filed 5–3–13; 8:45 am]

BILLING CODE 4310–55–P

DEPARTMENT OF THE INTERIOR

Bureau of Indian Affairs

Indian Entities Recognized and Eligible To Receive Services From the United States Bureau of Indian Affairs

AGENCY: Bureau of Indian Affairs, Interior.

ACTION: Notice.

SUMMARY: This notice publishes the current list of 566 tribal entities recognized and eligible for funding and services from the Bureau of Indian Affairs by virtue of their status as Indian tribes. The list is updated from the notice published on August 10, 2012 (77 FR 47868).

FOR FURTHER INFORMATION CONTACT: Gail Veney, Bureau of Indian Affairs, Division of Tribal Government Services, Mail Stop 4513–MIB, 1849 C Street NW., Washington, DC 20240. Telephone number: (202) 513–7641.

SUPPLEMENTARY INFORMATION: This notice is published pursuant to Section 104 of the Act of November 2, 1994 (Pub. L. 103–454; 108 Stat. 4791, 4792), and in exercise of authority delegated to the Assistant Secretary—Indian Affairs under 25 U.S.C. 2 and 9 and 209 DM 8.

Published below is a list of federally acknowledged tribes in the contiguous 48 states and in Alaska.

Amendments to the list include name changes and name corrections and two additions. To aid in identifying tribal name changes, the tribe's former name is included with the new tribal name. To aid in identifying corrections, the tribe's previously listed name is included with the tribal name. We will continue to list the tribe's former or

previously listed name for several years before dropping the former or previously listed name from the list.

The listed entities are acknowledged to have the immunities and privileges available to other federally acknowledged Indian tribes by virtue of their government-to-government relationship with the United States as well as the responsibilities, powers, limitations and obligations of such tribes. We have continued the practice of listing the Alaska Native entities separately solely for the purpose of facilitating identification of them and reference to them given the large number of complex Native names.

Dated: April 24, 2013.

Kevin Washburn,

Assistant Secretary—Indian Affairs.

Indian Tribal Entities Within the Contiguous 48 States Recognized and Eligible To Receive Services From the United States Bureau of Indian Affairs

Absentee-Shawnee Tribe of Indians of Oklahoma
Agua Caliente Band of Cahuilla Indians of the Agua Caliente Indian Reservation, California
Ak Chin Indian Community of the Maricopa (Ak Chin) Indian Reservation, Arizona
Alabama-Coushatta Tribe of Texas (previously listed as the Alabama-Coushatta Tribes of Texas)
Alabama-Quassarte Tribal Town
Alturas Indian Rancheria, California
Apache Tribe of Oklahoma
Arapaho Tribe of the Wind River Reservation, Wyoming
Aroostook Band of Micmacs (previously listed as the Aroostook Band of Micmac Indians)
Assiniboine and Sioux Tribes of the Fort Peck Indian Reservation, Montana
Augustine Band of Cahuilla Indians, California (previously listed as the Augustine Band of Cahuilla Mission Indians of the Augustine Reservation)
Bad River Band of the Lake Superior Tribe of Chippewa Indians of the Bad River Reservation, Wisconsin
Bay Mills Indian Community, Michigan
Bear River Band of the Rohnerville Rancheria, California
Berry Creek Rancheria of Maidu Indians of California
Big Lagoon Rancheria, California
Big Pine Paiute Tribe of the Owens Valley (previously listed as the Big Pine Band of Owens Valley Paiute Shoshone Indians of the Big Pine Reservation, California)
Big Sandy Rancheria of Western Mono Indians of California (previously listed as the Big Sandy Rancheria of Mono Indians of California)
Big Valley Band of Pomo Indians of the Big Valley Rancheria, California
Bishop Paiute Tribe (previously listed as the Paiute-Shoshone Indians of the Bishop Community of the Bishop Colony, California)
Blackfeet Tribe of the Blackfeet Indian Reservation of Montana
Blue Lake Rancheria, California
Bridgeport Indian Colony (previously listed as the Bridgeport Paiute Indian Colony of California)
Buena Vista Rancheria of Me-Wuk Indians of California
Burns Paiute Tribe (previously listed as the Burns Paiute Tribe of the Burns Paiute Indian Colony of Oregon)
Cabazon Band of Mission Indians, California
Cachil DeHe Band of Wintun Indians of the Colusa Indian Community of the Colusa Rancheria, California
Caddo Nation of Oklahoma
Cahto Tribe of the Laytonville Rancheria
Cahuilla Band of Mission Indians of the Cahuilla Reservation, California
California Valley Miwok Tribe, California
Campo Band of Diegueno Mission Indians of the Campo Indian Reservation, California
Capitan Grande Band of Diegueno Mission Indians of California: (Barona Group of Capitan Grande Band of Mission Indians of the Barona Reservation, California; Viejas (Baron Long) Group of Capitan Grande Band of Mission Indians of the Viejas Reservation, California)
Catawba Indian Nation (aka Catawba Tribe of South Carolina)
Cayuga Nation
Cedarville Rancheria, California
Chemehuevi Indian Tribe of the Chemehuevi Reservation, California
Cher-Ae Heights Indian Community of the Trinidad Rancheria, California
Cherokee Nation
Cheyenne and Arapaho Tribes, Oklahoma (previously listed as the Cheyenne-Arapaho Tribes of Oklahoma)
Cheyenne River Sioux Tribe of the Cheyenne River Reservation, South Dakota
Chicken Ranch Rancheria of Me-Wuk Indians of California
Chippewa-Cree Indians of the Rocky Boy's Reservation, Montana
Chitimacha Tribe of Louisiana
Citizen Potawatomi Nation, Oklahoma
Cloverdale Rancheria of Pomo Indians of California
Cocopah Tribe of Arizona
Coeur D'Alene Tribe (previously listed as the Coeur D'Alene Tribe of the Coeur D'Alene Reservation, Idaho)
Cold Springs Rancheria of Mono Indians of California
Colorado River Indian Tribes of the Colorado River Indian Reservation, Arizona and California
Comanche Nation, Oklahoma
Confederated Salish and Kootenai Tribes of the Flathead Reservation
Confederated Tribes and Bands of the Yakama Nation
Confederated Tribes of Siletz Indians of Oregon (previously listed as the Confederated Tribes of the Siletz Reservation)
Confederated Tribes of the Chehalis Reservation
Confederated Tribes of the Colville Reservation
Confederated Tribes of the Coos, Lower Umpqua and Siuslaw Indians
Confederated Tribes of the Goshute Reservation, Nevada and Utah
Confederated Tribes of the Grand Ronde Community of Oregon
Confederated Tribes of the Umatilla Indian Reservation (previously listed as the Confederated Tribes of the Umatilla Reservation, Oregon)
Confederated Tribes of the Warm Springs Reservation of Oregon
Coquille Indian Tribe (previously listed as the Coquille Tribe of Oregon)
Cortina Indian Rancheria of Wintun Indians of California
Coushatta Tribe of Louisiana
Cow Creek Band of Umpqua Tribe of Indians (previously listed as the Cow Creek Band of Umpqua Indians of Oregon)
Cowlitz Indian Tribe
Coyote Valley Band of Pomo Indians of California
Crow Creek Sioux Tribe of the Crow Creek Reservation, South Dakota
Crow Tribe of Montana
Death Valley Timbi-sha Shoshone Tribe (previously listed as the Death Valley Timbi-Sha Shoshone Band of California)
Delaware Nation, Oklahoma
Delaware Tribe of Indians
Dry Creek Rancheria Band of Pomo Indians, California (previously listed as the Dry Creek Rancheria of Pomo Indians of California)
Duckwater Shoshone Tribe of the Duckwater Reservation, Nevada
Eastern Band of Cherokee Indians
Eastern Shawnee Tribe of Oklahoma
Elem Indian Colony of Pomo Indians of the Sulphur Bank Rancheria, California
Elk Valley Rancheria, California
Ely Shoshone Tribe of Nevada
Enterprise Rancheria of Maidu Indians of California
Ewiiaapaayp Band of Kumeyaay Indians, California
Federated Indians of Graton Rancheria, California
Flandreau Santee Sioux Tribe of South Dakota

Forest County Potawatomi Community, Wisconsin
Fort Belknap Indian Community of the Fort Belknap Reservation of Montana
Fort Bidwell Indian Community of the Fort Bidwell Reservation of California
Fort Independence Indian Community of Paiute Indians of the Fort Independence Reservation, California
Fort McDermitt Paiute and Shoshone Tribes of the Fort McDermitt Indian Reservation, Nevada and Oregon
Fort McDowell Yavapai Nation, Arizona
Fort Mojave Indian Tribe of Arizona, California & Nevada
Fort Sill Apache Tribe of Oklahoma
Gila River Indian Community of the Gila River Indian Reservation, Arizona
Grand Traverse Band of Ottawa and Chippewa Indians, Michigan
Greenville Rancheria (previously listed as the Greenville Rancheria of Maidu Indians of California)
Grindstone Indian Rancheria of Wintun-Wailaki Indians of California
Guidiville Rancheria of California
Habematolel Pomo of Upper Lake, California
Hannahville Indian Community, Michigan
Havasupai Tribe of the Havasupai Reservation, Arizona
Ho-Chunk Nation of Wisconsin
Hoh Indian Tribe (previously listed as the Hoh Indian Tribe of the Hoh Indian Reservation, Washington)
Hoopa Valley Tribe, California
Hopi Tribe of Arizona
Hopland Band of Pomo Indians, California (formerly Hopland Band of Pomo Indians of the Hopland Rancheria, California)
Houlton Band of Maliseet Indians
Hualapai Indian Tribe of the Hualapai Indian Reservation, Arizona
Iipay Nation of Santa Ysabel, California (previously listed as the Santa Ysabel Band of Diegueno Mission Indians of the Santa Ysabel Reservation)
Inaja Band of Diegueno Mission Indians of the Inaja and Cosmit Reservation, California
Ione Band of Miwok Indians of California
Iowa Tribe of Kansas and Nebraska
Iowa Tribe of Oklahoma
Jackson Rancheria of Me-Wuk Indians of California
Jamestown S'Klallam Tribe
Jamul Indian Village of California
Jena Band of Choctaw Indians
Jicarilla Apache Nation, New Mexico
Kaibab Band of Paiute Indians of the Kaibab Indian Reservation, Arizona
Kalispel Indian Community of the Kalispel Reservation
Karuk Tribe (previously listed as the Karuk Tribe of California)
Kashia Band of Pomo Indians of the Stewarts Point Rancheria, California
Kaw Nation, Oklahoma
Kewa Pueblo, New Mexico (previously listed as the Pueblo of Santo Domingo)
Keweenaw Bay Indian Community, Michigan
Kialegee Tribal Town
Kickapoo Traditional Tribe of Texas
Kickapoo Tribe of Indians of the Kickapoo Reservation in Kansas
Kickapoo Tribe of Oklahoma
Kiowa Indian Tribe of Oklahoma
Klamath Tribes
Koi Nation of Northern California (previously listed as the Lower Lake Rancheria, California)
Kootenai Tribe of Idaho
La Jolla Band of Luiseno Indians, California (previously listed as the La Jolla Band of Luiseno Mission Indians of the La Jolla Reservation)
La Posta Band of Diegueno Mission Indians of the La Posta Indian Reservation, California
Lac Courte Oreilles Band of Lake Superior Chippewa Indians of Wisconsin
Lac du Flambeau Band of Lake Superior Chippewa Indians of the Lac du Flambeau Reservation of Wisconsin
Lac Vieux Desert Band of Lake Superior Chippewa Indians of Michigan
Las Vegas Tribe of Paiute Indians of the Las Vegas Indian Colony, Nevada
Little River Band of Ottawa Indians, Michigan
Little Traverse Bay Bands of Odawa Indians, Michigan
Lone Pine Paiute-Shoshone Tribe (previously listed as the Paiute-Shoshone Indians of the Lone Pine Community of the Lone Pine Reservation, California)
Los Coyotes Band of Cahuilla and Cupeno Indians, California (previously listed as the Los Coyotes Band of Cahuilla & Cupeno Indians of the Los Coyotes Reservation)
Lovelock Paiute Tribe of the Lovelock Indian Colony, Nevada
Lower Brule Sioux Tribe of the Lower Brule Reservation, South Dakota
Lower Elwha Tribal Community (previously listed as the Lower Elwha Tribal Community of the Lower Elwha Reservation, Washington)
Lower Sioux Indian Community in the State of Minnesota
Lummi Tribe of the Lummi Reservation
Lytton Rancheria of California
Makah Indian Tribe of the Makah Indian Reservation
Manchester Band of Pomo Indians of the Manchester Rancheria, California (previously listed as the Manchester Band of Pomo Indians of the Manchester-Point Arena Rancheria, California)
Manzanita Band of Diegueno Mission Indians of the Manzanita Reservation, California
Mashantucket Pequot Indian Tribe (previously listed as the Mashantucket Pequot Tribe of Connecticut)
Mashpee Wampanoag Indian Tribal Council, Inc. (previously listed as the Mashpee Wampanoag Tribe, Massachusetts)
Match-e-be-nash-she-wish Band of Pottawatomi Indians of Michigan
Mechoopda Indian Tribe of Chico Rancheria, California
Menominee Indian Tribe of Wisconsin
Mesa Grande Band of Diegueno Mission Indians of the Mesa Grande Reservation, California
Mescalero Apache Tribe of the Mescalero Reservation, New Mexico
Miami Tribe of Oklahoma
Miccosukee Tribe of Indians
Middletown Rancheria of Pomo Indians of California
Minnesota Chippewa Tribe, Minnesota (Six component reservations: Bois Forte Band (Nett Lake); Fond du Lac Band; Grand Portage Band; Leech Lake Band; Mille Lacs Band; White Earth Band)
Mississippi Band of Choctaw Indians
Moapa Band of Paiute Indians of the Moapa River Indian Reservation, Nevada
Mohegan Indian Tribe of Connecticut
Mooretown Rancheria of Maidu Indians of California
Morongo Band of Mission Indians, California (previously listed as the Morongo Band of Cahuilla Mission Indians of the Morongo Reservation)
Muckleshoot Indian Tribe (previously listed as the Muckleshoot Indian Tribe of the Muckleshoot Reservation, Washington)
Narragansett Indian Tribe
Navajo Nation, Arizona, New Mexico & Utah
Nez Perce Tribe (previously listed as Nez Perce Tribe of Idaho)
Nisqually Indian Tribe (previously listed as the Nisqually Indian Tribe of the Nisqually Reservation, Washington)
Nooksack Indian Tribe
Northern Cheyenne Tribe of the Northern Cheyenne Indian Reservation, Montana
Northfork Rancheria of Mono Indians of California
Northwestern Band of Shoshoni Nation (previously listed as the Northwestern Band of Shoshoni Nation of Utah (Washakie)
Nottawaseppi Huron Band of the Potawatomi, Michigan (previously listed as the Huron Potawatomi, Inc.)

Oglala Sioux Tribe (previously listed as the Oglala Sioux Tribe of the Pine Ridge Reservation, South Dakota)
Ohkay Owingeh, New Mexico (previously listed as the Pueblo of San Juan)
Omaha Tribe of Nebraska
Oneida Nation of New York
Oneida Tribe of Indians of Wisconsin
Onondaga Nation
Otoe-Missouria Tribe of Indians, Oklahoma
Ottawa Tribe of Oklahoma
Paiute Indian Tribe of Utah (Cedar Band of Paiutes, Kanosh Band of Paiutes, Koosharem Band of Paiutes, Indian Peaks Band of Paiutes, and Shivwits Band of Paiutes) (formerly Paiute Indian Tribe of Utah (Cedar City Band of Paiutes, Kanosh Band of Paiutes, Koosharem Band of Paiutes, Indian Peaks Band of Paiutes, and Shivwits Band of Paiutes))
Paiute-Shoshone Tribe of the Fallon Reservation and Colony, Nevada
Pala Band of Luiseno Mission Indians of the Pala Reservation, California
Pascua Yaqui Tribe of Arizona
Paskenta Band of Nomlaki Indians of California
Passamaquoddy Tribe
Pauma Band of Luiseno Mission Indians of the Pauma & Yuima Reservation, California
Pawnee Nation of Oklahoma
Pechanga Band of Luiseno Mission Indians of the Pechanga Reservation, California
Penobscot Nation (previously listed as the Penobscot Tribe of Maine)
Peoria Tribe of Indians of Oklahoma
Picayune Rancheria of Chukchansi Indians of California
Pinoleville Pomo Nation, California (previously listed as the Pinoleville Rancheria of Pomo Indians of California)
Pit River Tribe, California (includes XL Ranch, Big Bend, Likely, Lookout, Montgomery Creek and Roaring Creek Rancherias)
Poarch Band of Creeks (previously listed as the Poarch Band of Creek Indians of Alabama)
Pokagon Band of Potawatomi Indians, Michigan and Indiana
Ponca Tribe of Indians of Oklahoma
Ponca Tribe of Nebraska
Port Gamble S'Klallam Tribe (previously listed as the Port Gamble Band of S'Klallam Indians)
Potter Valley Tribe, California
Prairie Band Potawatomi Nation (previously listed as the Prairie Band of Potawatomi Nation, Kansas)
Prairie Island Indian Community in the State of Minnesota
Pueblo of Acoma, New Mexico
Pueblo of Cochiti, New Mexico
Pueblo of Isleta, New Mexico
Pueblo of Jemez, New Mexico
Pueblo of Laguna, New Mexico
Pueblo of Nambe, New Mexico
Pueblo of Picuris, New Mexico
Pueblo of Pojoaque, New Mexico
Pueblo of San Felipe, New Mexico
Pueblo of San Ildefonso, New Mexico
Pueblo of Sandia, New Mexico
Pueblo of Santa Ana, New Mexico
Pueblo of Santa Clara, New Mexico
Pueblo of Taos, New Mexico
Pueblo of Tesuque, New Mexico
Pueblo of Zia, New Mexico
Puyallup Tribe of the Puyallup Reservation
Pyramid Lake Paiute Tribe of the Pyramid Lake Reservation, Nevada
Quartz Valley Indian Community of the Quartz Valley Reservation of California
Quechan Tribe of the Fort Yuma Indian Reservation, California & Arizona
Quileute Tribe of the Quileute Reservation
Quinault Indian Nation (previously listed as the Quinault Tribe of the Quinault Reservation, Washington)
Ramona Band of Cahuilla, California (previously listed as the Ramona Band or Village of Cahuilla Mission Indians of California)
Red Cliff Band of Lake Superior Chippewa Indians of Wisconsin
Red Lake Band of Chippewa Indians, Minnesota
Redding Rancheria, California
Redwood Valley or Little River Band of Pomo Indians of the Redwood Valley Rancheria California (previously listed as the Redwood Valley Rancheria of Pomo Indians of California)
Reno-Sparks Indian Colony, Nevada
Resighini Rancheria, California
Rincon Band of Luiseno Mission Indians of the Rincon Reservation, California
Robinson Rancheria Band of Pomo Indians, California (previously listed as the Robinson Rancheria of Pomo Indians of California)
Rosebud Sioux Tribe of the Rosebud Indian Reservation, South Dakota
Round Valley Indian Tribes, Round Valley Reservation, California (previously listed as the Round Valley Indian Tribes of the Round Valley Reservation, California)
Sac & Fox Nation of Missouri in Kansas and Nebraska
Sac & Fox Nation, Oklahoma
Sac & Fox Tribe of the Mississippi in Iowa
Saginaw Chippewa Indian Tribe of Michigan
Saint Regis Mohawk Tribe (previously listed as the St. Regis Band of Mohawk Indians of New York)
Salt River Pima-Maricopa Indian Community of the Salt River Reservation, Arizona
Samish Indian Nation (previously listed as the Samish Indian Tribe, Washington)
San Carlos Apache Tribe of the San Carlos Reservation, Arizona
San Juan Southern Paiute Tribe of Arizona
San Manuel Band of Mission Indians, California (previously listed as the San Manual Band of Serrano Mission Indians of the San Manual Reservation)
San Pasqual Band of Diegueno Mission Indians of California
Santa Rosa Band of Cahuilla Indians, California (previously listed as the Santa Rosa Band of Cahuilla Mission Indians of the Santa Rosa Reservation)
Santa Rosa Indian Community of the Santa Rosa Rancheria, California
Santa Ynez Band of Chumash Mission Indians of the Santa Ynez Reservation, California
Santee Sioux Nation, Nebraska
Sauk-Suiattle Indian Tribe
Sault Ste. Marie Tribe of Chippewa Indians, Michigan
Scotts Valley Band of Pomo Indians of California
Seminole Tribe of Florida (previously listed as the Seminole Tribe of Florida (Dania, Big Cypress, Brighton, Hollywood & Tampa Reservations))
Seneca Nation of Indians (previously listed as the Seneca Nation of New York)
Seneca-Cayuga Tribe of Oklahoma
Shakopee Mdewakanton Sioux Community of Minnesota
Shawnee Tribe
Sherwood Valley Rancheria of Pomo Indians of California
Shingle Springs Band of Miwok Indians, Shingle Springs Rancheria (Verona Tract), California
Shinnecock Indian Nation
Shoalwater Bay Indian Tribe of the Shoalwater Bay Indian Reservation (previously listed as the Shoalwater Bay Tribe of the Shoalwater Bay Indian Reservation, Washington)
Shoshone Tribe of the Wind River Reservation, Wyoming
Shoshone-Bannock Tribes of the Fort Hall Reservation
Shoshone-Paiute Tribes of the Duck Valley Reservation, Nevada
Sisseton-Wahpeton Oyate of the Lake Traverse Reservation, South Dakota
Skokomish Indian Tribe (previously listed as the Skokomish Indian Tribe of the Skokomish Reservation, Washington)
Skull Valley Band of Goshute Indians of Utah
Smith River Rancheria, California

Snoqualmie Indian Tribe (previously listed as the Snoqualmie Tribe, Washington
Soboba Band of Luiseno Indians, California
Sokaogon Chippewa Community, Wisconsin
Southern Ute Indian Tribe of the Southern Ute Reservation, Colorado
Spirit Lake Tribe, North Dakota
Spokane Tribe of the Spokane Reservation
Squaxin Island Tribe of the Squaxin Island Reservation
St. Croix Chippewa Indians of Wisconsin
Standing Rock Sioux Tribe of North & South Dakota
Stillaguamish Tribe of Indians of Washington (previously listed as the Stillaguamish Tribe of Washington)
Stockbridge Munsee Community, Wisconsin
Summit Lake Paiute Tribe of Nevada
Suquamish Indian Tribe of the Port Madison Reservation
Susanville Indian Rancheria, California
Swinomish Indians of the Swinomish Reservation of Washington
Sycuan Band of the Kumeyaay Nation
Table Mountain Rancheria of California
Tejon Indian Tribe
Te-Moak Tribe of Western Shoshone Indians of Nevada (Four constituent bands: Battle Mountain Band; Elko Band; South Fork Band and Wells Band)
The Chickasaw Nation
The Choctaw Nation of Oklahoma
The Modoc Tribe of Oklahoma
The Muscogee (Creek) Nation
The Osage Nation (previously listed as the Osage Tribe)
The Quapaw Tribe of Indians
The Seminole Nation of Oklahoma
Thlopthlocco Tribal Town
Three Affiliated Tribes of the Fort Berthold Reservation, North Dakota
Tohono O'odham Nation of Arizona
Tonawanda Band of Seneca (previously listed as the Tonawanda Band of Seneca Indians of New York)
Tonkawa Tribe of Indians of Oklahoma
Tonto Apache Tribe of Arizona
Torres Martinez Desert Cahuilla Indians, California (previously listed as the Torres-Martinez Band of Cahuilla Mission Indians of California)
Tulalip Tribes of Washington (previously listed as the Tulalip Tribes of the Tulalip Reservation, Washington)
Tule River Indian Tribe of the Tule River Reservation, California
Tunica-Biloxi Indian Tribe
Tuolumne Band of Me-Wuk Indians of the Tuolumne Rancheria of California
Turtle Mountain Band of Chippewa Indians of North Dakota
Tuscarora Nation
Twenty-Nine Palms Band of Mission Indians of California
United Auburn Indian Community of the Auburn Rancheria of California
United Keetoowah Band of Cherokee Indians in Oklahoma
Upper Sioux Community, Minnesota
Upper Skagit Indian Tribe
Ute Indian Tribe of the Uintah & Ouray Reservation, Utah
Ute Mountain Tribe of the Ute Mountain Reservation, Colorado, New Mexico & Utah
Utu Utu Gwaitu Paiute Tribe of the Benton Paiute Reservation, California
Walker River Paiute Tribe of the Walker River Reservation, Nevada
Wampanoag Tribe of Gay Head (Aquinnah)
Washoe Tribe of Nevada & California (Carson Colony, Dresslerville Colony, Woodfords Community, Stewart Community, & Washoe Ranches)
White Mountain Apache Tribe of the Fort Apache Reservation, Arizona
Wichita and Affiliated Tribes (Wichita, Keechi, Waco & Tawakonie), Oklahoma
Wilton Rancheria, California
Winnebago Tribe of Nebraska
Winnemucca Indian Colony of Nevada
Wiyot Tribe, California (previously listed as the Table Bluff Reservation—Wiyot Tribe)
Wyandotte Nation
Yankton Sioux Tribe of South Dakota
Yavapai-Apache Nation of the Camp Verde Indian Reservation, Arizona
Yavapai-Prescott Indian Tribe (previously listed as the Yavapai-Prescott Tribe of the Yavapai Reservation, Arizona)
Yerington Paiute Tribe of the Yerington Colony & Campbell Ranch, Nevada
Yocha Dehe Wintun Nation, California (previously listed as the Rumsey Indian Rancheria of Wintun Indians of California)
Yomba Shoshone Tribe of the Yomba Reservation, Nevada
Ysleta Del Sur Pueblo of Texas
Yurok Tribe of the Yurok Reservation, California
Zuni Tribe of the Zuni Reservation, New Mexico

Native Entities Within the State of Alaska Recognized and Eligible To Receive Services From the United States Bureau of Indian Affairs

Agdaagux Tribe of King Cove
Akiachak Native Community
Akiak Native Community
Alatna Village
Algaaciq Native Village (St. Mary's)
Allakaket Village
Angoon Community Association
Anvik Village
Arctic Village (See Native Village of Venetie Tribal Government)
Asa'carsarmiut Tribe
Atqasuk Village (Atkasook)
Beaver Village
Birch Creek Tribe
Central Council of the Tlingit & Haida Indian Tribes
Chalkyitsik Village
Cheesh-Na Tribe (previously listed as the Native Village of Chistochina)
Chevak Native Village
Chickaloon Native Village
Chignik Bay Tribal Council (previously listed as the Native Village of Chignik)
Chignik Lake Village
Chilkat Indian Village (Klukwan)
Chilkoot Indian Association (Haines)
Chinik Eskimo Community (Golovin)
Chuloonawick Native Village
Circle Native Community
Craig Tribal Association (previously listed as the Craig Community Association)
Curyung Tribal Council
Douglas Indian Association
Egegik Village
Eklutna Native Village
Ekwok Village
Emmonak Village
Evansville Village (aka Bettles Field)
Galena Village (aka Louden Village)
Gulkana Village
Healy Lake Village
Holy Cross Village
Hoonah Indian Association
Hughes Village
Huslia Village
Hydaburg Cooperative Association
Igiugig Village
Inupiat Community of the Arctic Slope
Iqurmuit Traditional Council
Ivanoff Bay Village
Kaguyak Village
Kaktovik Village (aka Barter Island)
Kasigluk Traditional Elders Council
Kenaitze Indian Tribe
Ketchikan Indian Corporation
King Island Native Community
King Salmon Tribe
Klawock Cooperative Association
Knik Tribe
Kokhanok Village
Koyukuk Native Village
Levelock Village
Lime Village
Manley Hot Springs Village
Manokotak Village
McGrath Native Village
Mentasta Traditional Council
Metlakatla Indian Community, Annette Island Reserve
Naknek Native Village
Native Village of Afognak
Native Village of Akhiok
Native Village of Akutan
Native Village of Aleknagik
Native Village of Ambler
Native Village of Atka

Native Village of Barrow Inupiat Traditional Government
Native Village of Belkofski
Native Village of Brevig Mission
Native Village of Buckland
Native Village of Cantwell
Native Village of Chenega (aka Chanega)
Native Village of Chignik Lagoon
Native Village of Chitina
Native Village of Chuathbaluk (Russian Mission, Kuskokwim)
Native Village of Council
Native Village of Deering
Native Village of Diomede (aka Inalik)
Native Village of Eagle
Native Village of Eek
Native Village of Ekuk
Native Village of Elim
Native Village of Eyak (Cordova)
Native Village of False Pass
Native Village of Fort Yukon
Native Village of Gakona
Native Village of Gambell
Native Village of Georgetown
Native Village of Goodnews Bay
Native Village of Hamilton
Native Village of Hooper Bay
Native Village of Kanatak
Native Village of Karluk
Native Village of Kiana
Native Village of Kipnuk
Native Village of Kivalina
Native Village of Kluti Kaah (aka Copper Center)
Native Village of Kobuk
Native Village of Kongiganak
Native Village of Kotzebue
Native Village of Koyuk
Native Village of Kwigillingok
Native Village of Kwinhagak (aka Quinhagak)
Native Village of Larsen Bay
Native Village of Marshall (aka Fortuna Ledge)
Native Village of Mary's Igloo
Native Village of Mekoryuk
Native Village of Minto
Native Village of Nanwalek (aka English Bay)
Native Village of Napaimute
Native Village of Napakiak
Native Village of Napaskiak
Native Village of Nelson Lagoon
Native Village of Nightmute
Native Village of Nikolski
Native Village of Noatak
Native Village of Nuiqsut (aka Nooiksut)
Native Village of Nunam Iqua (previously listed as the Native Village of Sheldon's Point)
Native Village of Nunapitchuk
Native Village of Ouzinkie
Native Village of Paimiut
Native Village of Perryville
Native Village of Pilot Point
Native Village of Pitka's Point
Native Village of Point Hope
Native Village of Point Lay
Native Village of Port Graham
Native Village of Port Heiden
Native Village of Port Lions
Native Village of Ruby
Native Village of Saint Michael
Native Village of Savoonga
Native Village of Scammon Bay
Native Village of Selawik
Native Village of Shaktoolik
Native Village of Shishmaref
Native Village of Shungnak
Native Village of Stevens
Native Village of Tanacross
Native Village of Tanana
Native Village of Tatitlek
Native Village of Tazlina
Native Village of Teller
Native Village of Tetlin
Native Village of Tuntutuliak
Native Village of Tununak
Native Village of Tyonek
Native Village of Unalakleet
Native Village of Unga
Native Village of Venetie Tribal Government (Arctic Village and Village of Venetie)
Native Village of Wales
Native Village of White Mountain
Nenana Native Association
New Koliganek Village Council
New Stuyahok Village
Newhalen Village
Newtok Village
Nikolai Village
Ninilchik Village
Nome Eskimo Community
Nondalton Village
Noorvik Native Community
Northway Village
Nulato Village
Nunakauyarmiut Tribe
Organized Village of Grayling (aka Holikachuk)
Organized Village of Kake
Organized Village of Kasaan
Organized Village of Kwethluk
Organized Village of Saxman
Orutsararmuit Native Village (aka Bethel)
Oscarville Traditional Village
Pauloff Harbor Village
Pedro Bay Village
Petersburg Indian Association
Pilot Station Traditional Village
Platinum Traditional Village
Portage Creek Village (aka Ohgsenakale)
Pribilof Islands Aleut Communities of St. Paul & St. George Islands
Qagan Tayagungin Tribe of Sand Point Village
Qawalangin Tribe of Unalaska
Rampart Village
Saint George Island (See Pribilof Islands Aleut Communities of St. Paul & St. George Islands)
Saint Paul Island (See Pribilof Islands Aleut Communities of St. Paul & St. George Islands)
Seldovia Village Tribe
Shageluk Native Village
Sitka Tribe of Alaska
Skagway Village
South Naknek Village
Stebbins Community Association
Sun'aq Tribe of Kodiak (previously listed as the Shoonaq' Tribe of Kodiak)
Takotna Village
Tangirnaq Native Village (formerly Lesnoi Village (aka Woody Island))
Telida Village
Traditional Village of Togiak
Tuluksak Native Community
Twin Hills Village
Ugashik Village
Umkumiut Native Village (previously listed as Umkumiute Native Village)
Village of Alakanuk
Village of Anaktuvuk Pass
Village of Aniak
Village of Atmautluak
Village of Bill Moore's Slough
Village of Chefornak
Village of Clarks Point
Village of Crooked Creek
Village of Dot Lake
Village of Iliamna
Village of Kalskag
Village of Kaltag
Village of Kotlik
Village of Lower Kalskag
Village of Ohogamiut
Village of Old Harbor
Village of Red Devil
Village of Salamatoff
Village of Sleetmute
Village of Solomon
Village of Stony River
Village of Venetie (See Native Village of Venetie Tribal Government)
Village of Wainwright
Wrangell Cooperative Association
Yakutat Tlingit Tribe
Yupiit of Andreafski

[FR Doc. 2013–10649 Filed 5–3–13; 8:45 am]

BILLING CODE 4310–4J–P

DEPARTMENT OF THE INTERIOR

Bureau of Land Management

[LLCON00000 L10200000 DF0000.LXSS080C0000]

Notice of Public Meeting Location Change, Northwest Colorado Resource Advisory Council Meeting

AGENCY: Bureau of Land Management, Interior.

ACTION: Notice of Public Meeting

SUMMARY: In accordance with the Federal Land Policy and Management Act and the Federal Advisory Committee Act of 1972, the U.S. Department of the Interior, Bureau of Land Management (BLM) Northwest Colorado Resource Advisory Council

(RAC) will meet on May 22, 2013, in Grand Junction. This is a location change from what was announced in the April 1, 2013, **Federal Register.**

DATES: The Northwest Colorado RAC will meet May 22, 2013, from 10 a.m. to 3 p.m., with a public comment period regarding matters on the agenda at 11 a.m. A specific agenda will be available before the meeting at *www.blm.gov/co/st/en/BLM_Resources/racs/nwrac.html.*

ADDRESSES: The meeting will be held at the Grand Junction Field Office, 2815 H Road, Grand Junction, CO.

FOR FURTHER INFORMATION CONTACT: David Boyd, Public Affairs Specialist, Colorado River Valley Field Office, 2300 River Frontage Road, Silt, CO; (970) 876–9008. Persons who use a telecommunications device for the deaf (TDD) may call the Federal Information Relay Service (FIRS) at 1–800–877–8339 to contact the above individual during normal business hours. The FIRS is available 24 hours a day, seven days a week, to leave a message or question with the above individual. You will receive a reply during normal business hours.

SUPPLEMENTARY INFORMATION: The Northwest Colorado RAC advises the Secretary of the Interior, through the BLM, on a variety of public land issues in northwestern Colorado.

Topics of discussion during Northwest Colorado RAC meetings may include the BLM National Sage-Grouse Conservation Strategy, working group reports, recreation, fire management, land use planning, invasive species management, energy and minerals management, travel management, wilderness, wild horse herd management, land exchange proposals, cultural resource management, and other issues as appropriate.

These meetings are open to the public. The public may present written comments to the RACs. Each formal RAC meeting will also have time, as identified above, allocated for hearing public comments. Depending on the number of persons wishing to comment and time available, the time for individual oral comments may be limited. A subcommittee under this RAC meets regarding the McInnis Canyon National Conservation Area. The subcommittee reports to the Northwest Colorado RAC at each council meeting. Subcommittee meetings are open to the public. More information is available at *www.blm.gov/co/st/en/BLM_Resources/racs/nwrac.html.*

Helen M. Hankins,

BLM Colorado State Director.

[FR Doc. 2013–10664 Filed 5–3–13; 8:45 am]

BILLING CODE 4310–JB–P

DEPARTMENT OF THE INTERIOR

Bureau of Land Management

[LLOR936000.L14300000.ET0000 FUND: 13XL1109AF; HAG–13–0101; OR–67640]

Notice of Proposed Withdrawal and Opportunity for Public Meeting; Oregon

AGENCY: Bureau of Land Management, Interior.

ACTION: Notice.

SUMMARY: The Assistant Secretary of the Interior for Policy, Management and Budget proposes to withdraw on behalf of the Bureau of Land Management (BLM) 1,140.82 acres of public lands from location and entry under the United States mining laws, but not from leasing under the mineral or geothermal leasing laws, to protect the geological, cultural, botanical, recreational, and biological resources within the New River Area of Critical Environmental Concern (ACEC) located in Coos and Curry Counties, Oregon. This notice segregates the lands for up to 2 years from mining and gives the public an opportunity to comment on the proposed withdrawal application and to request a public meeting.

DATES: The BLM must receive comments and requests for a public meeting by August 5, 2013.

ADDRESSES: Comments and meeting requests should be sent to the Oregon/Washington State Director, Bureau of Land Management, P.O. Box 2965, Portland, OR 97208–2965.

FOR FURTHER INFORMATION CONTACT: Michael L. Barnes, BLM Oregon/Washington State Office, 503–808–6155, or Paul J. Rodriguez, BLM Coos Bay District Office, 541–751–4462. Persons who use a telecommunications device for the deaf (TDD) may call the Federal Information Relay Service (FIRS) at 1–800–877–8339 to reach either of the contacts stated above. The FIRS is available 24 hours a day, 7 days a week, to leave a message or question with either of the above individuals. You will receive a reply during normal business hours.

SUPPLEMENTARY INFORMATION: The BLM filed an application requesting the Assistant Secretary for Policy, Management and Budget to withdraw, subject to valid existing rights, the following described lands located in Coos and Curry Counties, Oregon, from location and entry under the United States mining laws, but not from leasing under the mineral or geothermal leasing laws, for a period of 20 years to protect the geological, cultural, botanical, recreational, and biological resources within the New River ACEC:

Willamette Meridian

T. 29 S., R. 15 W.,
- sec. 35, N½NE¼NE¼;
- sec. 36, lot 1, and NW¼NW¼; SAVING AND EXCEPTING that part subject to the right-of-way of Berg Road.

T. 30 S., R. 15 W.,
- sec. 2, W½SW¼, and a portion of lots 3 and 4 described as follows: Beginning at a point on the north line of said sec. 2, said point being 967.37 ft. westerly of the north quarter corner of said sec. 2; thence S. 9°29′14″ W., 192.13 ft.; thence S. 30°54′40″ W., 270.93 ft.; thence N. 83°13′00″ W., 594.73 ft.; thence S. 28°19′14″ W., 190.01 ft.; thence S. 0°19’14″ W., 422 ft. more or less to the north bank of Fourmile Creek; thence running northwesterly along the north bank of said creek to the north line of said sec. 2; thence easterly along said north line to a point, 1230 ft. more or less to the point of beginning.
- sec. 3, lots 3 and 4;
- sec. 10, lots 1 to 4, inclusive, E½NE¼, and SW¼SE¼;
- sec. 11, lots 3 to 7, inclusive, excluding an easement 20 feet wide along northerly and easterly boundary of lots 5 and 7;
- sec. 15, lots 1 to 4, inclusive, and NW¼NE¼;
- sec. 21, lots 1 and 2;
- sec. 22, lots 1 and 2, and NW¼SW¼;
- sec. 28, lots 2, 3, 4, and SE¼NE¼;
- sec. 32, lot 1;
- sec. 33, lot 2.

T. 31 S., R. 15 W.,
- sec. 7, lot 1;
- sec. 8, lots 3, 4, 7, and 8.

The areas described aggregate 1,140.82 acres in Coos and Curry Counties.

The Assistant Secretary for Policy, Management and Budget has approved the BLM’s petition/application. Therefore, the petition constitutes a withdrawal proposal of the Secretary of the Interior (43 CFR 2310.1–3(e)).

The use of a right-of-way, interagency agreement, or cooperative agreement would not adequately constrain non-discretionary uses and would not provide adequate protection of the Federal investment in the improvements located on the lands.

There are no suitable alternative sites with equal or greater benefit to the government.

No additional water rights will be needed to fulfill the purpose of the proposed withdrawal.

Records relating to the application may be examined by contacting Paul J. Rodriguez, BLM Coos Bay District Office. Comments, including names and street addresses of respondents, will be available for public review at the BLM Coos Bay District Office, 1300 Airport Lane, North Bend, OR 97459–2000, during regular business hours, Monday through Friday, except Federal holidays.

For a period until August 5, 2013, all persons who wish to submit comments, suggestions, or objections in connection with the proposed withdrawal may present their views in writing to the BLM State Director at the address indicated above. Before including your address, phone number, email address, or other personal identifying information in your comment, you should be aware that your entire comment—including your personal identifying information—may be made publicly available at any time. While you can ask us in your comment to withhold your personal identifying information from public review, we cannot guarantee that we will be able to do so.

Notice is hereby given that the BLM may hold a public meeting in connection with the proposed withdrawal. All interested parties who desire a public meeting for the purpose of being heard on the proposed withdrawal must submit a written request to the BLM State Director at the address indicated above no later than August 5, 2013. If the BLM authorized officer determines that the BLM will hold a public meeting, the BLM will publish a notice of the time and place in the **Federal Register** and at least one local newspaper at least 30 days before the scheduled date of the meeting.

For a period until May 6, 2015, the lands described in this notice will be segregated from location and entry under the United States mining laws, but not from leasing under the mineral or geothermal leasing laws, unless the application is denied or canceled or the withdrawal is approved prior to that date.

Licenses, permits, cooperative agreements, or discretionary land use authorizations of a temporary nature that will not significantly impact the values to be protected by the withdrawal may be allowed with the approval of the authorized officer of the BLM during the temporary segregative period.

The application will be processed in accordance with the regulations set forth in 43 CFR 2300.

Authority: 43 CFR 2310.3–1.

Fred O'Ferrall,

Chief, Branch of Land, Mineral, and Energy Resources.

[FR Doc. 2013–10654 Filed 5–3–13; 8:45 am]

BILLING CODE 4310–33–P

DEPARTMENT OF THE INTERIOR

National Park Service

[NPS–WASO–NRNHL–12867; PPWOCRADI0, PCU00RP14.R50000]

National Register of Historic Places; Notification of Pending Nominations and Related Actions

Nominations for the following properties being considered for listing or related actions in the National Register were received by the National Park Service before April 13, 2013. Pursuant to section 60.13 of 36 CFR part 60, written comments are being accepted concerning the significance of the nominated properties under the National Register criteria for evaluation. Comments may be forwarded by United States Postal Service, to the National Register of Historic Places, National Park Service, 1849 C St. NW, MS 2280, Washington, DC 20240; by all other carriers, National Register of Historic Places, National Park Service, 1201 Eye St. NW, 8th floor, Washington, DC 20005; or by fax, 202–371–6447. Written or faxed comments should be submitted by May 21, 2013. Before including your address, phone number, email address, or other personal identifying information in your comment, you should be aware that your entire comment—including your personal identifying information—may be made publicly available at any time. While you can ask us in your comment to withhold your personal identifying information from public review, we cannot guarantee that we will be able to do so.

Dated: April 18, 2013.

J. Paul Loether,

Chief, National Register of Historic Places/National Historic Landmarks Program.

ARKANSAS

Columbia County

President's House, E. Farm Rd., Magnolia, 13000315

Rushton Clinic, The, 219 N. Washington St., Magnolia, 13000316

Washington County

Fletcher, Adrian, House (Arkansas Designs of E. Fay Jones MPS), 6725 Huntsville Rd., Fayetteville, 13000317

FLORIDA

Collier County

Bay City Walking Dredge, 20200 E. Tamiami Trail, Naples, 13000318

Lee County

Dean Park Historic Residential District, Bounded by 1st St., Palm, Michigan & Evans Aves., Fort Myers, 13000319

Sarasota County

Nokomis Beach Pavilion (Sarasota School of Architecture MPS), 100 Casey Key Rd., Nokomis, 13000320

MICHIGAN

Genesee County

United States Post Office, 600 Church St., Flint, 13000321

Wayne County

United States Immigration Station, 333 Mount Elliott St., Detroit, 13000322

MINNESOTA

Hennepin County

Hotel Maryland, 1346 LaSalle Ave., Minneapolis, 13000323

Long Meadow Bridge (Iron and Steel Bridges in Minnesota MPS), Old Cedar Ave. at Minnesota R., Bloomington, 13000324

Minnesota Linseed Oil Company, 1101 S. 3rd St. & 312 11th Ave., S., Minneapolis, 13000325

Otter Tail County

Prospect House, 403 Lake Ave., N., Battle Lake, 13000326

Winona County

Chicago, Milwaukee and St. Paul Railway Station, 65 E. Mark St., Winona, 13000327

NEW YORK

Dutchess County

LaGrange District School, 2 Doctor Fink Rd., Freedom Plains, 13000328

Erie County

Meldrum, H.J., Company Building, 265–267 Pearl St., Buffalo, 13000330

Essex County

Keith and Branch Ford Motors Factory and Showroom, 12198 NY 9N, Upper Jay, 13000329

Otsego County

Mathewson—Bice Farmhouse and Mathewson Family Cemetery, 204 Bice Rd., Cooperstown, 13000331

OREGON

Benton County

Independent School, 25381 SW. Airport Ave., Benton, 13000332

SOUTH CAROLINA

Newberry County

Oak Grove, 921 Jessica Ave., Newberry, 13000333

VIRGINIA

Alexandria Independent city

Goodman, Charles M., House, 510 N. Quaker Ln., Alexandria (Independent City), 13000334

Amherst County

Dulwich Manor, 550 Richmond Hwy., Amherst, 13000335

Fairfax County

Lexington, 7301 High Point Rd., Lorton, 13000336

Hopewell Independent city

Downtown Hopewell Historic District (Boundary Increase and Decrease), E. Broadway Ave., E. City Point Rd., E. Cawson, Hopewell, N. Main & E. Poythress Sts., Hopewell (Independent City), 13000337

Lynchburg Independent city

Rivermont Historic District (Boundary Increase), 200 Boston Ave., Lynchburg (Independent City), 13000338

Mathews County

Springdale, 1108 New Point Comfort Hwy., Mathews, 13000339

Montgomery County

Christiansburg Downtown Historic District, E. & W. Main, N. & S. Franklin Sts., Christiansburg, 13000340

Nottoway County

Hyde Park, 6808 W. Courthouse Rd., Burkeville, 13000341

Pittsylvania County

Gretna Commercial Historic District, N. & S. Main & Henry Sts., Gretna, 13000342

Rappahannock County

Locust Grove—Luttrell, R.E. Farmstead, 24 Bunree Ln., Amissville, 13000343

Sussex County

Waverly Downtown Historic District, Roughly surrounding W. Main St. from County Dr. W. to Coppahaunk Ave., Waverly, 13000344

Washington County

Glade Spring Commercial Historic District, Parts of Town Square, Grace, E. Glade & Hemlock Sts., Glade Spring, 13000345

[FR Doc. 2013–10586 Filed 5–3–13; 8:45 am]

BILLING CODE 4312–51–P

INTERNATIONAL TRADE COMMISSION

[Investigation No. 332–227]

Caribbean Basin Economic Recovery Act: Impact on U.S. Industries and Consumers and on Beneficiary Countries, 21st Report

AGENCY: United States International Trade Commission.

ACTION: Notice of public hearing and opportunity to submit comments in connection with the 21st report.

SUMMARY: Section 215 of the CBERA (19 U.S.C. 2704) requires the Commission to report biennially to the Congress and the President by September 30 of each reporting year on the economic impact of the Act on U.S. industries and U.S. consumers and on the economy of the beneficiary countries. In 1986, the Commission instituted investigation No. 332–227, *Caribbean Basin Economic Recovery Act: Impact on U.S. Industries and Consumers and on Beneficiary Countries,* for the purpose of preparing this series of reports. This 21st report in the series will cover trade during calendar years 2011 and 2012. The Commission has scheduled a public hearing for June 13, 2013, in connection with this report.

DATES:

June 3, 2013: Deadline for filing requests to appear at the public hearing.

June 6, 2013: Deadline for filing pre-hearing briefs and statements.

June 13, 2013: Public hearing.

June 20, 2013: Deadline for filing post-hearing briefs and statements and all other written submissions.

September 30, 2013: Transmittal of Commission report to the Congress and the President.

ADDRESSES: All Commission offices, including the Commission's hearing rooms, are located in the United States International Trade Commission Building, 500 E Street SW., Washington, DC. All written submissions should be addressed to the Secretary, United States International Trade Commission, 500 E Street SW., Washington, DC 20436. The public record for this investigation may be viewed on the Commission's electronic docket (EDIS) at *http://www.usitc.gov/secretary/edis.htm.*

FOR FURTHER INFORMATION CONTACT: Justino De La Cruz (202–205–3252 or *justino.delacruz@usitc.gov*) or Cathy Jabara (202–205–3309 or *cathy.jabara@usitc.gov*) Country and Regional Analysis Division, Office of Economics, U.S. International Trade Commission, Washington, DC 20436. For information on the legal aspects of this investigation, contact William Gearhart of the Commission's Office of the General Counsel (202–205–3091 or *william.gearhart@usitc.gov*). The media should contact Peg O'Laughlin, Public Affairs Officer (202–205–1819 or *margaret.olaughlin@usitc.gov*). Hearing-impaired individuals may obtain information on this matter by contacting the Commission's TDD terminal at 202–205–1810. General information concerning the Commission may also be obtained by accessing its Web site at *http://www.usitc.gov*. Persons with mobility impairments who will need special assistance in gaining access to the Commission should contact the Office of the Secretary at 202–205–2000.

Background: Section 215(a)(1) of the Caribbean Basin Economic Recovery Act (CBERA) (19 U.S.C. 2704(a)(1)) requires that the Commission submit biennial reports to the Congress and the President regarding the economic impact of the Act on U.S. industries and consumers, and on the economy of the beneficiary countries. Section 215(b)(1) requires that the reports include, but not be limited to, an assessment regarding:

(A) The actual effect, during the period covered by the report, of [CBERA] on the United States economy generally, as well as on those specific domestic industries which produce articles that are like, or directly competitive with, articles being imported into the United States from beneficiary countries; and

(B) the probable future effect which this Act will have on the United States economy generally, as well as on such domestic industries, before the provisions of this Act terminate.

Notice of institution of the investigation was published in the **Federal Register** of May 14, 1986 (51 FR 17678). The Commission plans to transmit the 21st report, covering calendar years 2011 and 2012, by September 30, 2013.

Public Hearing: A public hearing in connection with this investigation will be held at the U.S. International Trade Commission Building, 500 E Street SW., Washington, DC, beginning at 9:30 a.m. on June 13, 2013. Requests to appear at the public hearing should be filed with the Secretary no later than 5:15 p.m., June 3, 2013. All pre-hearing briefs and statements should be filed not later than 5:15 p.m., June 6, 2013; and all post-hearing briefs and statements should be filed not later than 5:15 p.m., June 20, 2013. All requests to appear and pre- and post-hearing briefs and statements should be filed in accordance with the requirements in the ''Written Submissions'' section below. In the event that, as of the close of business on June 3, 2013, no witnesses are scheduled to appear at the hearing, the hearing will be canceled. Any person interested in attending the hearing as an observer or nonparticipant may call the Office of the Secretary (202–205–2000) after June 3, 2013, for information concerning whether the hearing will be held.

Written Submissions: In lieu of or in addition to participating in the hearing, interested parties are invited to file written submissions concerning this investigation. All written submissions should be addressed to the Secretary, and should be received not later than 5:15 p.m., June 20, 2013. All written submissions must conform to the provisions of section 201.8 of the Commission's *Rules of Practice and Procedure* (19 CFR 201.8). Section 201.8 and the Commission's Handbook on Filing Procedures require that interested parties file documents electronically on or before the filing deadline and submit eight (8) true paper copies by 12 p.m. eastern time on the next business day. In the event that confidential treatment of a document is requested, interested parties must file, at the same time as the eight paper copies, at least four (4) additional true paper copies in which the confidential information must be deleted (see the following paragraph for further information regarding confidential business information). Persons with questions regarding electronic filing should contact the Secretary (202–205–2000).

Any submissions that contain confidential business information (CBI) must also conform with the requirements of section 201.6 of the *Commission's Rules of Practice and Procedure* (19 CFR 201.6). Section 201.6 of the rules requires that the cover of the document and the individual pages be clearly marked as to whether they are the ''confidential'' or ''non-confidential'' version, and that the confidential business information be clearly identified by means of brackets. All written submissions, except for confidential business information, will be made available for inspection by interested parties.

The Commission intends to publish only a public report in this investigation. Accordingly, any CBI received by the Commission in this investigation will not be published in a manner that would reveal the operations of the firm supplying the information. The report will be made available to the public on the Commission's Web site.

Issued: April 30, 2013.

By order of the Commission.

Lisa R. Barton,

Acting Secretary.

[FR Doc. 2013–10536 Filed 5–3–13; 8:45 am]

BILLING CODE 7020–02–P

INTERNATIONAL TRADE COMMISSION

[Investigation No. 337–TA–880]

Certain Linear Actuators; Institution of Investigation Pursuant to 19 U.S.C. 1337

AGENCY: U.S. International Trade Commission.

ACTION: Notice.

SUMMARY: Notice is hereby given that a complaint was filed with the U.S. International Trade Commission on April 3, 2013, under section 337 of the Tariff Act of 1930, as amended, 19 U.S.C. 1337, on behalf of Okin America, Inc. of Frederick, Maryland and Dewert Okin GmbH of Germany. The complaint alleges violations of section 337 based upon the importation into the United States, the sale for importation, and the sale within the United States after importation of certain linear actuators by reason of infringement of U.S. Patent No 5,927,144 (''the '144 patent''). The complaint further alleges that an industry in the United States exists as required by subsection (a)(2) of section 337.

The complainants request that the Commission institute an investigation and, after the investigation, issue an exclusion order and cease and desist orders.

ADDRESSES: The complaint, except for any confidential information contained therein, is available for inspection during official business hours (8:45 a.m. to 5:15 p.m.) in the Office of the Secretary, U.S. International Trade Commission, 500 E Street SW., Room 112, Washington, DC 20436, telephone (202) 205–2000. Hearing impaired individuals are advised that information on this matter can be obtained by contacting the Commission's TDD terminal on (202) 205–1810. Persons with mobility impairments who will need special assistance in gaining access to the Commission should contact the Office of the Secretary at (202) 205–2000. General information concerning the Commission may also be obtained by accessing its internet server at *http://www.usitc.gov.* The public record for this investigation may be viewed on the Commission's electronic docket (EDIS) at *http://edis.usitc.gov.*

FOR FURTHER INFORMATION CONTACT: The Office of Unfair Import Investigations, U.S. International Trade Commission, telephone (202) 205–2560.

Authority: The authority for institution of this investigation is contained in section 337 of the Tariff Act of 1930, as amended, and in section 210.10 of the Commission's Rules of Practice and Procedure, 19 CFR 210.10 (2012).

Scope of Investigation: Having considered the complaint, the U.S. International Trade Commission, on April 30, 2013, *ordered that*—

(1) Pursuant to subsection (b) of section 337 of the Tariff Act of 1930, as amended, an investigation be instituted to determine whether there is a violation of subsection (a)(1)(B) of section 337 in the importation into the United States, the sale for importation, or the sale within the United States after importation of certain linear actuators by reason of infringement of one or more of claims 1–29 of the '144 patent, and whether an industry in the United States exists as required by subsection (a)(2) of section 337;

(2) For the purpose of the investigation so instituted, the following are hereby named as parties upon which this notice of investigation shall be served:

(a) The complainants are:

Okin America, Inc., 7330 Executive Way, Frederick, Maryland 21704.

Dewert Okin GmbH, Weststrasse 1, 32278 Kirchlengern, Germany.

(b) The respondents are the following entities alleged to be in violation of section 337, and are the parties upon which the complaint is to be served:

Changzhou Kaidi Electrical Co. Ltd., Wenxing Industrial Area, No. 4 Jiangcun East Road, Hengllin Town, Changzhou 213101, China.

Kaidi LLC, 2285 S. Michigan Road, Eaton Rapids, MI 48827.

(c) The Office of Unfair Import Investigations, U.S. International Trade Commission, 500 E Street SW., Suite 401, Washington, DC 20436; and

(3) For the investigation so instituted, the Chief Administrative Law Judge, U.S. International Trade Commission, shall designate the presiding Administrative Law Judge.

Responses to the complaint and the notice of investigation must be submitted by the named respondents in accordance with section 210.13 of the Commission's Rules of Practice and Procedure, 19 CFR 210.13. Pursuant to 19 CFR 201.16(d)–(e) and 210.13(a), such responses will be considered by the Commission if received not later than 20 days after the date of service by the Commission of the complaint and the notice of investigation. Extensions of time for submitting responses to the complaint and the notice of investigation will not be granted unless good cause therefor is shown.

Failure of a respondent to file a timely response to each allegation in the

complaint and in this notice may be deemed to constitute a waiver of the right to appear and contest the allegations of the complaint and this notice, and to authorize the administrative law judge and the Commission, without further notice to the respondent, to find the facts to be as alleged in the complaint and this notice and to enter an initial determination and a final determination containing such findings, and may result in the issuance of an exclusion order or a cease and desist order or both directed against the respondent.

Issued: April 30, 2013.

By order of the Commission.

Lisa R. Barton,

Acting Secretary to the Commission.

[FR Doc. 2013–10601 Filed 5–3–13; 8:45 am]

BILLING CODE 7020–02–P

INTERNATIONAL TRADE COMMISSION

[Investigation No. 332–534]

Renewable Energy and Related Services: Recent Developments

AGENCY: United States International Trade Commission.

ACTION: Extension of date for transmitting report.

SUMMARY: Following the receipt of a letter on April 15, 2013, from the United States Trade Representative (USTR), the Commission has extended to August 30, 2013, the date for transmitting its report to USTR in investigation No. 332–534, *Renewable Energy and Related Services: Recent Developments.*

DATES:

April 15, 2013: Receipt of the letter from USTR.

August 30, 2013: New date for transmitting the Commission's report to USTR.

Backround

The Commission published notice of institution of the investigation in the **Federal Register** on August 31, 2012 (77 FR 53233). In its original notice of investigation, the Commission indicated that it would transmit its report to USTR on June 28, 2013. The notice is also available on the Commission Web site at *http://www.usitc.gov*. All other information about the investigation, including a description of the subject matter to be addressed, contact information, and Commission addresses, remains the same as in the original notice. The public record for this investigation may be viewed on the Commission's electronic docket (EDIS) at *http://www.usitc.gov/secretary/edis.htm*.

Issued: April 30, 2013.

By order of the Commission.

Lisa R. Barton,

Acting Secretary to the Commission.

[FR Doc. 2013–10535 Filed 5–3–13; 8:45 am]

BILLING CODE 7020–02–P

INTERNATIONAL TRADE COMMISSION

[USITC SE–13–010]

Sunshine Act Meetings

AGENCY: United States International Trade Commission.

TIME AND DATE: May 13, 2013 at 11:00 a.m.

PLACE: Room 101, 500 E Street SW., Washington, DC 20436, Telephone: (202) 205–2000.

STATUS: Open to the public.

MATTERS TO BE CONSIDERED:

1. Agendas for future meetings: none.
2. Minutes.
3. Ratification List.
4. Vote in Inv. No. 731–TA–894 (Second Review) (Ammonium Nitrate from Ukraine). The Commission is currently scheduled to transmit its determination and Commissioners' opinions to the Secretary of Commerce on or before May 24, 2013.
5. Outstanding action jackets: none.

In accordance with Commission policy, subject matter listed above, not disposed of at the scheduled meeting, may be carried over to the agenda of the following meeting.

Dated: May 2, 2013.

By order of the Commission.

William R. Bishop,

Supervisory Hearings and Information Officer.

[FR Doc. 2013–10746 Filed 5–2–13; 11:15 am]

BILLING CODE 7020–02–P

DEPARTMENT OF JUSTICE

[OMB Number 1105–0084]

Agency Information Collection Activities; Proposed Collection; Comments Requested: Application for Approval as a Nonprofit Budget and Credit Counseling Agency

ACTION: 60-Day Notice.

The Department of Justice, Executive Office for United States Trustees, will be submitting the following application to the Office of Management and Budget (OMB) for review and clearance in accordance with the Paperwork Reduction Act of 1995. The application is published to obtain comments from the public and affected agencies. Comments are encouraged and will be accepted for 60 days until July 5, 2013.

All comments and suggestions, or questions regarding additional information, to include obtaining a copy of the proposed application with instructions, should be directed to Wendy Tien, Deputy Assistant Director, at the Executive Office for United States Trustees, Department of Justice, 441 G Street NW., Suite 6150, Washington, DC 20530.

Written comments and suggestions from the public and affected agencies concerning the collection of information are encouraged. Comments should address one or more of the following four points:

1. Evaluate whether the application is necessary for the proper performance of the functions of the agency, including whether the information will have practical utility;
2. Evaluate the accuracy of the agency's estimate of the burden of the collection of information, including the validity of the methodology and assumptions used;
3. Enhance the quality, utility, and clarity of the information to be collected;
4. Minimize the burden of the collection of information on those who are to respond, including through the use of appropriate automated, electronic, mechanical, or other technological collection techniques or other forms of information technology, e.g., permitting electronic submission of responses.

Overview of the Information:

Type of information collection:	Application form.
The title of the form/collection:	Application for Approval as a Nonprofit Budget and Credit Counseling Agency.
The agency form number, if any, and the applicable component of the department sponsoring the collection:	No form number. Executive Office for United States Trustees, Department of Justice.
Affected public who will be asked or required to respond, as well as a brief abstract:	Primary: Agencies who wish to offer credit counseling services. Other: None. Congress passed a bankruptcy law that requires any individual who wishes to file for bankruptcy to, within 180 days of filing for bankruptcy relief, first obtain credit counseling from a nonprofit budget and credit counseling agency that has been approved by the United States Trustee.
An estimate of the total number of respondents and the amount of time estimated for an average respondent to respond/reply:	It is estimated that 175 respondents will complete the application; initial applicants will complete the application in approximately ten (10) hours, while renewal applicants will complete the application in approximately four (4) hours.
An estimate of the total public burden (in hours) associated with the collection:	The estimated total annual public burden associated with this application is 808 hours.

If additional information is required, contact: Jerri Murray, Department Clearance Officer, United States Department of Justice, Justice Management Division, Policy and Planning Staff, Patrick Henry Building, 601 D Street NW., Suite 1600, Washington, DC 20530.

Dated: April 30, 2013.

Jerri Murray,

Department Clearance Officer, U.S. Department of Justice.

[FR Doc. 2013–10588 Filed 5–3–13; 8:45 am]

BILLING CODE 4410–40–P

DEPARTMENT OF JUSTICE

[OMB Number 1122–0020]

Agency Information Collection Activities; Extension of a Currently Approved Collection; Comments Requested: Office on Violence Against Women Solicitation Template

ACTION: 30-Day notice.

The Department of Justice, Office on Violence Against Women (OVW) will be submitting the following information collection request to the Office of Management and Budget (OMB) for review and approval in accordance with the Paperwork Reduction Act of 1995. The proposed information collection is published to obtain comments from the public and affected agencies. This proposed information collection was previously published in the **Federal Register** Volume 78, Number 37, page 12789 on February 25, 2013, allowing for a 60 day comment period.

The purpose of this notice is to allow for an additional 30 days for public comment until June 5, 2013. This process is conducted in accordance with 5 CFR 1320.10.

Written comments and/or suggestions regarding the items contained in this notice, especially the estimated public burden and associated response time, should be directed to The Office of Management and Budget, Office of Information and Regulatory Affairs, Attention Department of Justice Desk Officer, Washington, DC 20503. Additionally, comments may be submitted to OMB via facsimile to (202) 395–7285.

Written comments and suggestions from the public and affected agencies concerning the proposed collection of information are encouraged. Your comments should address one or more of the following four points:

(1) Evaluate whether the proposed collection of information is necessary for the proper performance of the functions of the agency, including whether the information will have practical utility;

(2) Evaluate the accuracy of the agency's estimate of the burden of the proposed collection of information, including the validity of the methodology and assumptions used;

(3) Enhance the quality, utility, and clarity of the information to be collected; and

(4) Minimize the burden of the collection of information on those who are to respond, including through the use of appropriate automated, electronic, mechanical, or other technological collection techniques or other forms of information technology, e.g., permitting electronic submission of responses.

Overview of This Information Collection

(1) *Type of Information Collection:* Extension of a currently approved collection.

(2) *Title of the Form/Collection:* OVW Solicitation Template.

(3) *Agency form number, if any, and the applicable component of the Department of Justice sponsoring the collection:* Form Number: 1122–0020. U.S. Department of Justice, OVW.

(4) *Affected public who will be asked or required to respond, as well as a brief abstract:* Primary: The affected public includes applicants to OVW grant programs authorized under the Violence Against Women Act of 1994 and reauthorized and amended by the Violence Against Women Act of 2000 and the Violence Against Women Act of 2005. These include States, territory, Tribe or unit of local government; State, territorial, tribal or unit of local governmental entity; institutions of higher education including colleges and universities; tribal organizations; Federal, State, tribal, territorial or local courts or court-based programs; State sexual assault coalition, State domestic violence coalition; territorial domestic violence or sexual assault coalition; tribal coalition; tribal organization; community-based organizations and non-profit, nongovernmental organizations. The purpose of the solicitation template is to provide a framework to develop program-specific announcements soliciting applications for funding. A program solicitation outlines the specifics of the funding program; describes the requirements for eligibility; instructs an applicant on the necessary components of an application under a specific program (e.g. project activities and timeline, proposed budget): and provides registration dates, due dates, and instructions on how to apply within the designated application system.

(5) *An estimate of the total number of respondents and the amount of time estimated for an average respondent to respond/reply:* It is estimated that information will be collect annually

from the approximately 1800 respondents (applicants to the OVW grant programs). The public reporting burden for this collection of information is estimated at up to 30 hours per application. The 30-hour estimate is based on the amount of time to prepare a narrative, budget and other materials for the application as well to coordinate with and develop a memorandum of understanding with requisite project partners.

(6) *An estimate of the total public burden (in hours) associated with the collection:* The estimated public burden associated with this collection is 54,000 hours.

If additional information is required contact: Jerri Murray, Department Clearance Officer, United States Department of Justice, Justice Management Division, Policy and Planning Staff, Two Constitution Square, 145 N Street NE., Room 1407B, Washington, DC 20530.

Dated: April 30, 2013.

Jerri Murray,

Department Clearance Officer for PRA, United States Department of Justice.

[FR Doc. 2013–10602 Filed 5–3–13; 8:45 am]

BILLING CODE 4410–FX–P

DEPARTMENT OF JUSTICE

[OMB Number 1121–0235]

Agency Information Collection Activities; Proposed Collection; Comments Requested; Extension of Currently Approved Collection: Bureau of Justice Assistance Application Form: Bulletproof Vest Partnership (BVP)

ACTION: 60-Day notice.

The Department of Justice, Office of Justice Programs, Bureau of Justice Assistance, will be submitting the following information collection request for review and clearance in accordance with the Paperwork Reduction Act of 1995. This proposed information collection is published to obtain comments from the public and affected agencies. Comments are encouraged and will be accepted for ''sixty days'' until July 5, 2013. If you have additional comments, suggestions, or need a copy of the proposed information collection instrument with instructions or additional information, please contact C. Casto at 1–202–353–7193, Bureau of Justice Assistance, Office of Justice Programs, U. S. Department of Justice, 810 7th Street NW., Washington, DC., 20531 or by email at *Chris.Casto@usdoj.gov.*

Written comments and suggestions from the public and affected agencies concerning the proposed collection of information are encouraged. Your comments should address one or more of the following four points:

—Evaluate whether the proposed collection of information is necessary for the proper performance of the functions of the agency, including whether the information will have practical utility;

—Evaluate the accuracy of the agency's estimate of the burden of the proposed collection of information, including the validity of the methodology and assumptions used;

—Enhance the quality, utility, and clarity of the information to be collected; and

—Minimize the burden of the collection of information on those who are to respond, including through the use of appropriate automated, electronic, mechanical, or other technological collection techniques or other forms of information technology, e.g., permitting electronic submission of responses.

Overview of this information collection:

(1) *Type of information collection:* Extension of currently approved collection.

(2) *The title of the form/collection: Bulletproof Vest Partnership Application.*

(3) *The agency form number, if any, and the applicable component of the Department sponsoring the collection:* None. Bureau of Justice Assistance, Office of Justice Programs, United States Department of Justice.

(4) *Affected public who will be asked or required to respond, as well as a brief abstract:*

Primary: Jurisdictions and law enforcement agencies with armor vest needs.

Abstract: The Bulletproof Vest Partnership (BVP), created by the Bulletproof Vest Partnership Grant Act of 1998, is a unique U.S. Department of Justice initiative designed to provide a critical resource to state, tribal and local law enforcement agencies. The purpose of this program is to help protect the lives of law enforcement officers by helping states and units of local and tribal governments equip their officers with armor bulletproof vests. The collection of information is necessary to verify the eligibility of an applicant's jurisdiction for partial reimbursement of costs (up to 50%) associated with the purchase of the armored bulletproof vests. The data provided in the application will determine the need and funding level and provide bank account information for electronic payments. This program is administered in accordance with Bulletproof Vest Partnership Grant Act of 1998, Public Law 105–181, 42 USC 3796ll.

Others: None.

(5) *An estimate of the total number of respondents and the amount of time needed for an average respondent to respond is as follows:* It is estimated that no more than 4,500 respondents will apply each year. Each application takes approximately 1 hour to complete.

(6) An estimate of the total public burden (in hours) associated with the collection is 4,500 hours. Total Annual Reporting Burden: 4,500 × 1 hour per application = 4,500 hours.

If additional information is required, please contact, Jerri Murray, Department Clearance Officer, United States Department of Justice, Justice Management Division, Policy and Planning Staff, Two Constitution Square, 145 N Street NE., Room 1407B, Washington, DC, 20530.

Dated: April 30, 2013.

Jerri Murray,

Justice Management Division, U.S. Department of Justice.

[FR Doc. 2013–10590 Filed 5–3–13; 8:45 am]

BILLING CODE 4410–18–P

DEPARTMENT OF JUSTICE

[OMB Number 1110–0050]

Proposed Collection; Comments Requested: FBI National Academy Level 1 Evaluation: Student Course Questionnaire and FBI National Academy: General Remarks Questionnaire

ACTION: 30-Day Notice.

The Department of Justice (DOJ), Federal Bureau of Investigation (FBI), Training Division's Curriculum Management Section (CMS) will be submitting the following information collection request to the Office of Management and Budget (OMB) for review and approval in accordance with the Paperwork Reduction Act of 1995. The proposed information collection is published to obtain comments from the public and affected agencies. This proposed information collection was previously published in the **Federal Register** Volume 78, Number 38, Pages 13085–13086, on February 26, 2013, allowing for a 60-day comment period.

Comments are encouraged and will be accepted for 30 days until June 5, 2013. This process is conducted in accordance with 5 CFR 1320.10.

If you have comments (especially on the estimated public burden or associated response time), suggestions, or need a copy of the proposed information collection instrument with instructions or additional information, please contact Laleatha B. Goode, Management and Program Analyst, Federal Bureau of Investigation, Training Division, Evaluation and Accreditation Unit, FBI Academy, Quantico, Virginia 22135 or facsimile at (703) 632–3111.

Written comments and suggestions from the public and affected agencies concerning the proposed collection of information are encouraged. Your comments should address one or more of the following three points:

(1) Evaluate whether the proposed collection of information is necessary for the proper performance of the functions of the agency/component, including whether the information will have practical utility;

(2) Evaluate the accuracy of the agency's/component's estimate of the burden of the proposed collection of the information, including the validity of the methodology and assumptions used;

(3) Enhance the quality, utility, and clarity of the information to be collected; and minimize the burden of the collection of information on those who are to respond, including the use of appropriate automated, electronic, mechanical, or other technological collection techniques or other forms of information technology, e.g., permitting electronic submission of responses.

Overview of This Information

1. *Type of Information Collection:*

Approval of a reinstated collection.

2. *Title of the Forms:*

FBI National Academy Level 1 Evaluation: Student Course Questionnaire.

FBI National Academy: General Remarks Questionnaire.

3. *Agency Form Number, if any, and the applicable component of the department sponsoring the collection:*

Form Number: 1110–0050.

Sponsor: Training Division of the Federal Bureau of Investigation (FBI), Department of Justice (DOJ).

4. *Affected Public who will be asked or required to respond, as well as a brief abstract:*

Primary: FBI National Academy students that represent state and local police and sheriffs' departments, military police organizations, and federal law enforcement agencies from the United States and over 150 foreign nations.

Brief Abstract: This collection is requested by FBI National Academy. These surveys have been developed to measure the effectiveness of services that the FBI National Academy provides. We will utilize the students' comments to improve the current curriculum.

5. *An estimate of the total number of respondents and the amount of time estimated for an average respondent to respond:*

Approximately 1,040 FBI National Academy students per year will respond to two types of questionnaires. (1) FBI National Academy Level 1 Evaluation: Student Course Questionnaire and (2) FBI National Academy: General Remarks Questionnaire. It is predicted that we will receive a 75% respond rate for both surveys.

Each student will respond to approximately six to seven Student Course Questionnaires—one for each class they have completed. The average time for reading the directions to each questionnaire is estimated to be 2 minutes; the time to complete each questionnaire is estimated to be approximately 20 minutes. Thus the total time to complete the Student Course Questionnaire is 22 minutes.

For the FBI National Academy: General Remarks Questionnaire, student will respond to one questionnaire. The average time for reading the directions to this questionnaire is estimated to be 2 minutes; the time to complete the questionnaire is estimated to be approximately 10 minutes. Thus the total time to complete the General Remarks Questionnaire is 12 minutes.

The total hour burden for both surveys is 2,080 hours.

6. *An estimate of the total public burden (in hours) associated with the collection:*

The average hour burden for completing all the surveys combined is 2,080 hours.

If additional information is required, contact: Jerri Murray, Department Clearance Officer, United States Department of Justice, Policy and Planning Staff, Justice Management Division, Justice Management Division, Two Constitution Square, 145 N Street NE., Room 1407B, Washington, DC 20530.

Dated: April 30, 2013.

Jerri Murray,

Department Clearance Officer for PRA, United States Department of Justice.

[FR Doc. 2013–10591 Filed 5–3–13; 8:45 am]

BILLING CODE 4410–02–P

DEPARTMENT OF JUSTICE

[OMB Number 1105–0085]

Agency Information Collection Activities; Collection; Comments Requested: Application for Approval as a Provider of a Personal Financial Management Instructional Course

ACTION: 60-Day Notice.

The Department of Justice, Executive Office for United States Trustees, has submitted the following application to the Office of Management and Budget (OMB) for review and clearance in accordance with the Paperwork Reduction Act of 1995. The application is published to obtain comments from the public and affected agencies. Comments are encouraged and will be accepted for 60 days until July 5, 2013.

All comments and suggestions, or questions regarding additional information, to include obtaining a copy of the application with instructions, should be directed to Wendy Tien, Deputy Assistant Director, at the Executive Office for United States Trustees, Department of Justice, 441 G Street NW., Suite 6150, Washington, DC 20530.

Written comments and suggestions from the public and affected agencies concerning the collection of information are encouraged. Comments should address one or more of the following four points:

1. Evaluate whether the application is necessary for the proper performance of the functions of the agency, including whether the information will have practical utility;

2. Evaluate the accuracy of the agency's estimate of the burden of the collection of information, including the validity of the methodology and assumptions used;

3. Enhance the quality, utility, and clarity of the information to be collected; and

4. Minimize the burden of the collection of information on those who are to respond, including through the use of appropriate automated, electronic, mechanical, or other technological collection techniques or other forms of information technology, e.g., permitting electronic submission of responses.

Overview of the Information

Type of information collection:	Application form.
The title of the form/collection:	Application for Approval as a Provider of a Personal Financial Management Instructional Course.
The agency form number, if any, and the applicable component of the department sponsoring the collection:	No form number. Executive Office for United States Trustees, Department of Justice.
Affected public who will be asked or required to respond, as well as a brief abstract:	Primary: Individuals who wish to offer instructional courses to student debtors concerning personal financial management. Other: None. Congress passed a bankruptcy law that requires individuals who file for bankruptcy to complete an approved personal financial management instructional course as a condition of receiving a discharge.
An estimate of the total number of respondents and the amount of time estimated for an average respondent to respond/reply:	It is estimated that 275 respondents will complete the application; initial applicants will complete the application in approximately ten (10) hours, while renewal applicants will complete the application in approximately four (4) hours. It is estimated that approximately 1,368,450 debtors will complete a survey evaluating the effectiveness of an instructional course in approximately one (1) minute.
An estimate of the total public burden (in hours) associated with the collection:	The estimated total annual public burden associated with this application is 24,075.5 hours; the applicants' burden is 1,268 hours and the debtors' burden is 22,807.5 hours.

If additional information is required, contact: Jerri Murray, Department Clearance Officer, United States Department of Justice, Justice Management Division, Policy and Planning Staff, Two Constitution Square, 145 N Street NE., Room 1407B, Washington, DC 20530.

Dated: April 30, 2013.

Jerri Murray,

Department Clearance Officer for PRA, U.S. Department of Justice.

[FR Doc. 2013–10589 Filed 5–3–13; 8:45 am]

BILLING CODE 4410–40–P

FOREIGN CLAIMS SETTLEMENT COMMISSION

[F.C.S.C. Meeting and Hearing Notice No. 4–13]

Sunshine Act Meeting

The Foreign Claims Settlement Commission, pursuant to its regulations (45 CFR Part 503.25) and the Government in the Sunshine Act (5 U.S.C. 552b), hereby gives notice in regard to the scheduling of open meetings as follows:

Tuesday, May 14, 2013: 10:00 a.m.—Consideration of petitions to reopen Final Decisions in claims against Libya.

Status: Open.

All meetings are held at the Foreign Claims Settlement Commission, 600 E Street NW., Washington, DC. Requests for information, or advance notices of intention to observe an open meeting, may be directed to: Judith H. Lock, Executive Officer, Foreign Claims Settlement Commission, 600 E Street NW., Suite 6002, Washington, DC 20579. Telephone: (202) 616–6975.

Brian M. Simkin,

Chief Counsel.

[FR Doc. 2013–10688 Filed 5–3–13; 8:45 am]

BILLING CODE 4410–BA–P

NATIONAL CAPITAL PLANNING COMMISSION

Public Comment and Public Meeting on Draft Revisions to the Foreign Missions and International Organizations Element of the Comprehensive Plan for the National Capital: Federal Elements

AGENCY: National Capital Planning Commission.

ACTION: Notice of public comment period and public meeting.

SUMMARY: The National Capital Planning Commission (NCPC), the Planning Commission for the Federal Government within the National Capital Region, intends to release for public comment draft revisions to the Foreign Missions and International Organizations Element of the Comprehensive Plan for the National Capital: Federal Elements. The Comprehensive Plan for the National Capital: Federal Elements addresses matters relating to Federal Properties and Federal Interests in the National Capital Region, and provides a decision-making framework for actions the NCPC takes on specific plans and proposals submitted by Federal government agencies for the NCPC review required by law. The Foreign Missions and International Organizations Element articulates policies that guide federal actions on the location of diplomatic and international activities in Washington, DC to ensure chanceries, ambassadors' residences, and international organizations are located in a manner that is appropriate to the status and dignity of these activities, while enhancing Washington as one of the world's great capitals. The draft revised Foreign Missions and International Organizations Element will be available online at *http://www.ncpc.gov/compplan* by Monday, May 6, 2013. Printed copies are available upon request from the contact person noted below.

DATES AND TIME: The public comment period begins on the date of publication of this notice and closes on Friday, July 5, 2013. A public meeting to discuss the draft revisions to the Foreign Missions and International Organizations Element will be held on Tuesday, June 11, 2013 from 6:30 p.m.–8:30 p.m.

ADDRESSES: Mail written comments or hand deliver comments on the draft revisions to Comprehensive Plan Public Comment, National Capital Planning Commission, 401 9th Street NW., Suite 500, Washington, DC 20004. The public meeting will be held at 401 9th Street NW., North Lobby, Suite 500, Washington, DC 20004.

FOR FURTHER INFORMATION CONTACT: Angela Mar at (202) 482–7232 or *angela.mar@ncpc.gov*. Please confirm meeting attendance with Ms. Mar or as noted below.

SUPPLEMENTARY INFORMATION:

Electronic Access and Filing Addresses

You may submit comments electronically at the public comment portal at *http://www.ncpc.gov/compplan*.

Authority: (40 U.S.C. 8721(e)(2)).

Dated: April 24, 2013.

Anne R. Schuyler,

General Counsel.

[FR Doc. 2013–10269 Filed 5–3–13; 8:45 am]

BILLING CODE 7520–01–P

NATIONAL FOUNDATION ON THE ARTS AND THE HUMANITIES

National Endowment for the Arts; Proposed Collection, Comment Request

ACTION: Notice.

SUMMARY: The National Endowment for the Arts (NEA), as part of its continuing effort to reduce paperwork and respondent burden, conducts a preclearance consultation program to provide the general public and federal agencies with an opportunity to comment on proposed and/or continuing collections of information in accordance with the Paperwork Reduction Act of 1995 (PRA95) [44 U.S.C. 3506(c)(A)]. This program helps to ensure that requested data can be provided in the desired format, reporting burden (time and financial resources) is minimized, collection instruments are clearly understood, and the impact of collection requirements on respondents can be properly assessed. Currently, the NEA is soliciting comments concerning a baseline, comprehensive nationwide census of Local Arts Agencies (LAAs). A copy of the current information collection request can be obtained by contacting the office listed below in the address section of this notice.

DATES: Written comments must be submitted to the office listed in the address section below on or before July 1, 2013. The NEA is particularly interested in comments which:

- Evaluate whether the proposed collection of information is necessary for the proper performance of the functions of the agency, including whether the information will have practical utility;
- Evaluate the accuracy of the agency's estimate of the burden of the proposed collection of information including the validity of the methodology and assumptions used;
- Enhance the quality, utility, and clarity of the information to be collected; and
- Minimize the burden of the collection of information on those who are to respond, including through the use of appropriate automated, electronic, mechanical, or other technological collection techniques or other forms of information technology, e.g., permitting electronic submissions of responses.

ADDRESSES: Sunil Iyengar, National Endowment for the Arts, 1100 Pennsylvania Avenue NW., Room 616, Washington, DC 20506–0001, telephone (202) 682–5424 (this is not a toll-free number), fax (202) 682–5677.

Dated: April 30, 2013.

Kathy Plowitz-Worden,

Panel Coordinator, National Endowment for the Arts.

[FR Doc. 2013–10582 Filed 5–3–13; 8:45 am]

BILLING CODE 7537–01–P

NATIONAL FOUNDATION ON THE ARTS AND THE HUMANITIES

Arts Advisory Panel Meeting

AGENCY: National Endowment for the Arts, National Foundation on the Arts and Humanities.

ACTION: Notice of Meeting.

SUMMARY: Pursuant to Section 10(a)(2) of the Federal Advisory Committee Act (Pub. L. 92–463), as amended, notice is hereby given that one meeting of the Arts Advisory Panel to the National Council on the Arts will be held by teleconference at the Nancy Hanks Center, 1100 Pennsylvania Avenue NW., Washington, DC, 20506 as follows (ending time is approximate):

Partnership (partnership agreement review): by teleconference. This meeting will be open.

DATES: May 14, 2013; 3:00 p.m. to 4:00 p.m. EDT.

FOR FURTHER INFORMATION CONTACT: Further information with reference to this meeting can be obtained from Ms. Andi Mathis, State and Regional Partnerships, National Endowment for the Arts, Washington, DC, 20506; *mathisa@arts.gov* or call 202/682–5430.

SUPPLEMENTARY INFORMATION: The closed portions of meetings are for the purpose of Panel review, discussion, evaluation, and recommendations on financial assistance under the National Foundation on the Arts and the Humanities Act of 1965, as amended, including information given in confidence to the agency. In accordance with the determination of the Chairman of February 15, 2012, these sessions will be closed to the public pursuant to subsection (c)(6) of section 552b of Title 5, United States Code.

Dated: May 2, 2013.

Kathy Plowitz-Worden,

Panel Coordinator, National Endowment for the Arts.

[FR Doc. 2013–10787 Filed 5–3–13; 8:45 am]

BILLING CODE 7537–01–P

NATIONAL FOUNDATION ON THE ARTS AND THE HUMANITIES

Arts Advisory Panel Meeting

AGENCY: National Endowment for the Arts, National Foundation on the Arts and Humanities.

ACTION: Notice of Meeting.

SUMMARY: Pursuant to Section 10(a)(2) of the Federal Advisory Committee Act, as amended, notice is hereby given that two meetings of the Arts Advisory Panel to the National Council on the Arts will be held by teleconference at the Nancy Hanks Center, 1100 Pennsylvania Avenue NW., Washington, DC, 20506 as follows (ending times are approximate):

Arts Education (application review): By teleconference. This meeting will be closed.

Dates: May 22, 2013; 11:00 a.m. to 12:00 p.m.

Innovation (application review): By teleconference. This meeting will be closed.

Dates: May 24, 2013; 11:00 a.m. to 12:00 p.m.

FOR FURTHER INFORMATION CONTACT: Further information with reference to these meetings can be obtained from Ms. Kathy Plowitz-Worden, Office of Guidelines & Panel Operations, National Endowment for the Arts, Washington, DC 20506; *plowitzk@arts.gov* or call 202/682–5691.

SUPPLEMENTARY INFORMATION: The closed portions of meetings are for the purpose of Panel review, discussion, evaluation, and recommendations on financial assistance under the National Foundation on the Arts and the Humanities Act of 1965, as amended, including information given in confidence to the agency. In accordance with the determination of the Chairman of February 15, 2012, these sessions will be closed to the public pursuant to subsection (c)(6) of section 552b of Title 5, United States Code.

Dated: May 1, 2013.

Kathy Plowitz-Worden,

Panel Coordinator, National Endowment for the Arts.

[FR Doc. 2013–10629 Filed 5–3–13; 8:45 am]

BILLING CODE 7537–01–P

NATIONAL SCIENCE FOUNDATION

National Science Board; Sunshine Act Meetings; Notice

The National Science Board, pursuant to NSF regulations (45 CFR Part 614), the National Science Foundation Act, as amended (42 U.S.C. 1862n–5), and the Government in the Sunshine Act (5

U.S.C. 552b), hereby gives notice in regard to the scheduling of meetings for the transaction of National Science Board business and other matters specified, as follows:

AGENCY HOLDING MEETING: National Science Board.

DATE AND TIME: May 9, 2013 from 8:15 a.m. to 4:30 p.m., and May 10 from 8:30 a.m. to 3:00 p.m.

PLACE: These meetings will be held at the National Science Foundation, 4201Wilson Blvd., Rooms 1235 and 1295, Arlington, VA 22230. All visitors must contact the Board Office (call 703–292–7000 or send an email message to *nationalsciencebrd@nsf.gov*) at least 24 hours prior to the meeting and provide name and organizational affiliation. All visitors must report to the NSF visitor desk located in the lobby at the 9th and N. Stuart Streets entrance to receive a visitor's badge.

WEBCAST INFORMATION: Most public meetings and public portions of meetings will be webcast. To view the meetings, go to *http://www.tvworldwide.com/events/nsf/130509/*and follow the instructions.

UPDATES: Please refer to the National Science Board Web site for additional information. Meeting information and schedule updates (time, place, subject matter or status of meeting) may be found at *http://www.nsf.gov/nsb/notices/.*

AGENCY CONTACT: Jennie L. Moehlmann, *jmoehlma@nsf.gov,* (703) 292–7000.

PUBLIC AFFAIRS CONTACT: Dana Topousis, *dtopousi@nsf.gov*, (703) 292–7750.

STATUS: Portions open; portions closed.

Open Sessions

May 9, 2013

8:15–8:20 a.m. (Chairman's introduction)
8:20–10:30 a.m. (CPP)
8:20–10:30 a.m. (SEI)
10:40–11:40 a.m. (A&O)
10:40 a.m.–12:00 p.m. (SCF)
1:30–2:30 p.m. (CSB)
3:00–4:30 p.m. (TF Administrative Burdens)

May 10, 2013

10:30 a.m.–12:00 p.m. (Plenary)
1:00–3:00 p.m. (Plenary)

Closed Sessions

May 9, 2013

1:30–4:00 p.m. (CPP)
2:30–3:00 p.m. (CSB)

May 10, 2013

8:30–9:00 a.m. (Plenary executive closed)
9:00–10:15 a.m. (Plenary closed)

Matters To Be Discussed

Thursday, May 9, 2013

Committee on Programs and Plans

Room 1235 (Board Room)

Open Session: 8:20–10:30 a.m.

- Approval of Open CPP minutes for February 2013
- Committee Chairman's remarks—including update on schedule of action and information items for NSB review (NSB/CPP–13–18)
- Discussion Item: Review and approval of revised CPP charge
- Program Portfolio Discussion: Review of process and next topics
- Program Budget Overview: The White House BRAIN initiative—Brain Research through Advancing Innovative Neurotechnologies
- Polar Issues: End of season report
- Information Item: Laser Interferometer Gravitational Wave Observatory (LIGO) renewal proposal
- Information Item: Advanced Technology Solar Telescope (ATST)

Committee on Science & Engineering Indicators (SEI)

Room 1295

Open Session: 8:20–10:30 a.m.

- Chairman's remarks
- Approval of February meeting minutes (NSB/SEI–13–03)
- Update and discussion of ongoing *Indicators*-related projects: update on *Indicators* mobile application; discussion of revised 2012 ''STEM Education Data and Trends'' online tool (NSB/SEI–13–06); taking advantage of digital delivery for *Indicators*
- Discussion of a revised proposed topic for a companion report to *Indicators 2014* (NSB/SEI–13–05)
- Review and discussion of *Indicators 2014* draft chapters
- Chairman's summary

Committee on Audit and Oversight (A&O)

Room 1235

Open Session: 10:40–11:40 a.m.

- Approval of minutes of the February 2013 meeting (NSB/A&O–13–3 and NSB/A&O–13–4)
- Committee Chairman's opening remarks
- OIG semiannual report
- Inspector General's update
- Chief Financial Officer's update
- FY 2012 merit review report
- Report on NSF's use of the Committee of Visitors (COV)—information item
- Periodic review of committee charge
- Committee Chairman's closing remarks

CSB Subcommittee on Facilities (SCF)

Room 1295

Open Session: 10:40 a.m.–12:00 p.m.

- Committee Chair remarks
- Discussion Item: SCF charge and timelines
- Information Item: NSF's planning horizon
- Discussion Item: 2013 annual portfolio review—follow-up from February discussion; portfolio risk survey preliminary results; SCF member priorities

Committee on Strategy and Budget (CSB)

Room 1235

Open Session: 1:30–2:30 p.m.

- Committee Chairman's remarks
- Approval of CSB open minutes for February 2013 meeting (NSB/CSB–13–5) and open CPP–CSB joint minutes for February 2013 meeting (NSB/CSB–13–3)
- NSF FY 2013 budget update
- NSF FY 2014 budget update
- NSF Strategic Plan update
- Study on Trends in Science Budgets
- SCF Chairman's report

Committee on Strategy and Budget (CSB)

Closed Session: 2:30–3:00 p.m.

- Committee Chairman's remarks
- Approval of CSB Closed Minutes for February 2013 meeting (NSB/CSB–13–6) and closed CPP–CSB joint minutes for February 2013 meeting (NSB/CSB–13–4)
- FY 2013 budget update
- FY 2015 budget development

Committee on Programs and Plans (CPP)

Closed Session: 1:30–4:00 p.m.

- Committee Chairman's remarks
- Approval of closed CPP minutes for February 2013
- Implementation of recommendations on Antarctic facilities: FY 2014/2015 budgets
- NSB Information Item: (NSB/CPP–13–22)—Planning and prioritizing infrastructure investments in the Directorate for Geosciences
- NSB Action Items: (NSB/CPP–13–14 and NSB/CPP–15–15)—Geodesy Advancing Geosciences and EarthScope (GAGE) and Seismological Facilities for the Advancement of Geoscience and EarthScope (SAGE)
- NSB Action Item: (NSB/CPP–13–13)—Renewal of Award for Management of the National Center for Atmospheric Research (NCAR)
- NSB Action Item: (NSB/CPP–13–16)—iPlant

Task Force on Administrative Burdens

Room 1235

Open Session: 3:00–4:30 p.m.

- Approval of the April 22, 2013 Teleconference Minutes (NSB/AB–13–5)
- Task Force Chairman's remarks
- Discussion Item: Administrative burdens associated with institutional animal care and use committees (ACUCs)
- Discussion Item: Administrative burdens associated with institutional review boards (IRBs)
- General Discussion—update on request for information (RFI); report outs on roundtable discussions; Omni circular

Friday, May 10, 2013

Plenary Board Meeting

Executive Closed Session: 8:30–9:00 a.m.

- Approval of Executive closed session minutes, February 2013 meeting (NSB–13–13)
- Election of Executive Committee members (NSB–07–53 and NSB/NOMCOM–07–1)
- Board member proposals

Plenary Board Meeting

Closed Session: 9:00–10:15 a.m.

- Approval of closed session minutes, February 2013 (NSB–13–14)
- Awards and Agreements/Resolutions from CPP
  - Directorate for Geosciences (GEO), Division of Earth Sciences (EAR): Seismological Facilities for the Advancement of Geoscience and EarthScope (SAGE) (NSB–13–26)
  - Directorate for Geosciences (GEO), Division of Earth Sciences (EAR): Geodesy Advancing Geosciences and EarthScope (GAGE) (NSB–13–27)
  - Directorate for Geosciences (GEO), Division of Atmospheric and Geospace Sciences (AGS): National Center for Atmospheric Research (NCAR) operation and management (NSB–13–24)
  - Directorate for Biological Sciences (BIO), Division of Biological Infrastructure (DBI): The iPlant Collaborative—Cyberinfrastructure for the Life Sciences (NSB–13–25)
- Closed committee reports
- Discussion of risks to NSF

Plenary Board Meeting

Room 1235

Open Session: 10:30 a.m.–12:00 p.m.

- Presentations by Honorary Award recipients:
  - Alan T. Waterman Award, Dr. Mung Chiang
  - NSB Public Service Award-Individual, Dr. Jo Anne Vasquez
  - Vannevar Bush Award, Dr. Neal Lane

Plenary Board Meeting

Room 1235

Open Session: 1:00–3:00 p.m.

- Approval of open session minutes, February 2013 (NSB–13–15)
- Chairman's report
- NSF plan on open access
- Director's report
- Open committee reports
- Chairman's remarks

Meeting Adjourns: 3:00 p.m.

Ann Bushmiller,

Senior Counsel to the National Science Board.

[FR Doc. 2013–10692 Filed 5–3–13; 8:45 am]

BILLING CODE 7555–01–P

NUCLEAR REGULATORY COMMISSION

[Docket Nos. 50–213 and 72–39; NRC–2013–0080]

Connecticut Yankee Atomic Power Company, Haddam Neck Plant, Environmental Assessment and Finding of No Significant Impact Regarding an Exemption Request

AGENCY: Nuclear Regulatory Commission.

ACTION: Environmental assessment and finding of no significant impact; issuance.

ADDRESSES: Please refer to Docket ID NRC–2013–0080 when contacting the NRC about the availability of information regarding this document. You may access information related to this document, which the NRC possesses and is publicly available, using any of the following methods:

- *Federal Rulemaking Web site:* Go to *http://www.regulations.gov* and search for Docket ID NRC–2013–0080. Address questions about NRC dockets to Carol Gallagher; telephone: 301–492–3668; email: *Carol.Gallagher@nrc.gov.* For technical questions, contact the individual(s) listed in the **FOR FURTHER INFORMATION CONTACT** section of this document.
- *NRC's Agencywide Documents Access and Management System (ADAMS):* You may access publicly available documents online in the NRC Library at *http://www.nrc.gov/reading-rm/adams.html.* To begin the search, select ''ADAMS Public Documents'' and then select ''*Begin Web-based ADAMS Search.''* For problems with ADAMS, please contact the NRC's Public Document Room (PDR) reference staff at 1–800–397–4209, 301–415–4737, or by email to *pdr.resource@nrc.gov.* The ADAMS accession number for each document referenced in this document (if that document is available in ADAMS) is provided the first time that a document is referenced.
- *NRC's PDR:* You may examine and purchase copies of public documents at the NRC's PDR, Room O1–F21, One White Flint North, 11555 Rockville Pike, Rockville, Maryland 20852.

FOR FURTHER INFORMATION CONTACT: John Goshen, Project Manager, Division of Spent Fuel Storage and Transportation, Office of Nuclear Material Safety and Safeguards, U.S. Nuclear Regulatory Commission, Washington, DC 20555. Telephone: 301–492–3325; fax number: 301–492–3342; email: *John.Goshen@nrc.gov.*

1.0 Background

On November 23, 2011, the NRC issued a final rule amending certain emergency planning (EP) requirements in the regulations that govern domestic licensing of production and utilization facilities (76 FR 72560; November 23, 2011) (EP Final Rule). The EP Final Rule went into effect on December 23, 2011, with various implementation dates for the rule changes.

On June 20, 2012, Connecticut Yankee Atomic Power Company (CYAPCO) submitted a letter, ''Request for Exemption to Revised Emergency Planning Regulations'' (ADAMS Accession No. ML12181A114), requesting exemption from specific EP requirements of Section 50.47 of Title 10 of the *Code of Federal Regulations* (10 CFR) and Appendix E to 10 CFR Part 50 for the Haddam Neck Plant (HNP) Independent Spent Fuel Storage Installation (ISFSI). CYAPCO stated that the exemption request and its impact on the corresponding emergency plan: (1) Is authorized by law; (2) will not present an undue risk to the public health and safety; and (3) is consistent with the common defense and security in accordance with Section 50.12 of 10 CFR. CYAPCO states that its intent in submitting this exemption request is to maintain the regulatory structure in place prior to the issuance of the EP Final Rule and, therefore, does not propose any changes to its emergency plan or implementing procedures other than simple regulatory reference changes that can be implemented under 10 CFR 50.54(q).

CYAPCO is holder of Facility Operating License DPR–61 for the HNP located in Middlesex County,

Connecticut, that allows only the storage of spent nuclear fuel. The license, issued pursuant to the Atomic Energy Act of 1954, as amended, and Part 50 of 10 CFR, allows CYAPCO to possess and store spent nuclear fuel at the permanently shut down and decommissioned facility under the provision of Part 72, Subpart K of 10 CFR, ''General License for Storage of Spent Fuel at Power Reactor Sites.'' In a letter dated December 5, 1996 (ADAMS Legacy No. 9612110214), CYAPCO informed the NRC that the HNP facility had permanently ceased power operations and fuel had been removed from the reactor and placed in the spent fuel pool.

After ceasing operations at the reactor, CYAPCO transferred spent nuclear fuel from the spent fuel pool to the HNP ISFSI for long term dry storage, and this was completed in 2005. Final decommissioning of the reactor site was completed in 2007 (ADAMS Accession No. ML073250040). The HNP ISFSI is a vertical dry cask storage facility for spent nuclear fuel. The ISFSI is located on approximately five acres of land that was not released for unrestricted use after completion of decommissioning of the reactor.

2.0 Discussion

On May 30, 1997 (ADAMS Legacy Accession No. 9809030182), CYAPCO requested an exemption from the provisions of 10 CFR 50.54(q) that required emergency plans to meet all of the standards of 10 CFR 50.47(b) and all of the requirements of Appendix E to 10 CFR part 50 so that the licensee would have to meet only certain EP standards and requirements. Additionally, CYAPCO requested approval of a proposed HNP Defueled Emergency Plan (DEP) that proposed to meet those limited standards and requirements.

The NRC approved the requested exemption and the DEP on August 28, 1998 (ADAMS Accession No. ML051020346). The Safety Evaluation Report (SER) established EP requirements for HNP as documented in the DEP. The NRC staff (staff) concluded that the licensee's emergency plan was acceptable in view of the greatly reduced offsite radiological consequences associated with the decommissioning plant status. The staff found that the postulated dose to the general public from any reasonably conceivable accident would not exceed the U.S. Environmental Protection Agency (EPA) Protective Action Guides (PAGs), and for the bounding accident, the length of time available to respond to a loss of spent fuel cooling or reduction in water level in the spent fuel pool gave confidence that offsite measures for the public could be taken without preparation.

According to CYAPCO, it had placed all spent nuclear fuel and Greater-Than-Class-C waste into dry storage at an ISFSI on the HNP site as of March 30, 2005. CYAPCO revised the DEP to reflect these transfers and the ongoing dismantling and decommissioning activities at the HNP site and submitted these revisions to the NRC through Revision 7 to the CYAPCO HNP Emergency Plan on April 5, 2005 (ADAMS Accession No. ML051020346).

In a letter dated September 18, 2006 (ADAMS Accession No. ML062690475), CYAPCO submitted Revision 8 to the HNP Emergency Plan, an emergency plan change request to the HNP Emergency Plan to revise the exercise frequency from annual to every other year. The NRC approved this request in an exemption letter, dated March 16, 2007 (ADAMS Accession No. ML062980120 [1]). This was the only exemption from EP requirements that was requested and approved since the approval and SER for the HNP DEP. The basis for the existing exemptions has not changed since the exemptions were previously granted; therefore CYAPCO continues to be exempt from the EP requirements for which the NRC previously granted exemptions.

Revision 10 of the CYAPCO HNP Emergency Plan, dated November 29, 2011 (ADAMS Accession No. ML11348A113 [1]) reflects the current conditions, where only the ISFSI and its related support systems, structures, and components remain.

With the EP Final Rule, several requirements in 10 CFR Part 50 were modified or added, including changes in Section 50.47, Section 50.54, and Appendix E. Specific implementation dates were provided for each EP rule change. The EP Final Rule codified certain voluntary protective measures contained in NRC Bulletin 2005–02, ''Emergency Preparedness and Response Actions for Security-Based Events,'' and generically applicable requirements similar to those previously imposed by NRC Order EA–02–026, ''Order for Interim Safeguards and Security Compensatory Measures,'' dated February 25, 2002.

In addition, the EP Final Rule amended other licensee emergency plan requirements to: (1) Enhance the ability of licensees in preparing for and in taking certain protective actions in the event of a radiological emergency; (2) address, in part, security issues identified after the terrorist events of September 11, 2001; (3) clarify regulations to effect consistent emergency plan implementation among licensees; and (4) modify certain EP requirements to be more effective and efficient. However, the EP Final Rule was only an enhancement to the NRC's regulations and was not necessary for adequate protection. On page 72563 of the **Federal Register** notice for the EP Final Rule, the Commission ''determined that the existing regulatory structure ensures adequate protection of public health and safety and common defense and security.''

3.0 Regulatory Evaluation

In the Final Rule for Storage of Spent Fuel in NRC-Approved Storage Casks at Power Reactor Sites (55 FR 29181; July 18, 1990), the NRC amended its regulations to provide for the storage of spent nuclear fuel under a general license on the site of any nuclear power reactor. In its Statement of Considerations (SOC) for the Final Rule (55 FR 29185), the Commission responded to comments related to emergency preparedness for spent fuel dry storage, stating, ''The new 10 CFR 72.32(c) * * * states that, 'For an ISFSI that is located on the site of a nuclear power reactor licensed for operation by the Commission, the emergency plan required by 10 CFR 50.47 shall be deemed to satisfy the requirements of this section.' One condition of the general license is that the reactor licensee must review the reactor emergency plan and modify it as necessary to cover dry cask storage and related activities. If the emergency plan is in compliance with 10 CFR 50.47, then it is in compliance with the Commission's regulations with respect to dry cask storage.''

In the SOC for the Final Rule for EP requirements for ISFSIs and Monitored Retrievable Storage Installation (MRS) (60 FR 32430; June 22, 1995), the Commission stated, in part, that ''current reactor emergency plans cover all at-or near reactor ISFSI's. An ISFSI that is to be licensed for a stand-alone operation will need an emergency plan established in accordance with the requirements in this rulemaking'' (60 FR 32431). The Commission responded to comments (60 FR 32435) concerning offsite emergency planning for ISFSIs or an MRS and concluded that ''the offsite consequences of potential accidents at an ISFSI or a MRS would not warrant establishing Emergency Planning Zones.''

As part of the review for CYAPCO's current exemption request, the staff also used the EP regulations in 10 CFR 72.32

[1] Document contains sensitive security related information and is not publically available.

and Spent Fuel Project Office Interim Staff Guidance—16, ''Emergency Planning,'' (ADAMS Accession No. ML003724570) as references to ensure consistency between specific-licensed and general-licensed IFSIs.

4.0 Discussion

Pursuant to 10 CFR 50.12, the Commission may, upon application by any interested person or upon its own initiative, grant exemptions from the requirements of 10 CFR part 50 when: (1) The exemptions are authorized by law, will not present an undue risk to public health or safety, and are consistent with the common defense and security; and (2) when special circumstances are present. The staff reviewed this request to determine whether the specific exemptions should be granted, and the safety evaluation (SE) is provided in its letter to CYAPCO, dated March 19, 2013 (ADAMS Accession No. ML13064A374). After evaluating the exemption requests, the staff determined CYAPCO should be granted the exemptions detailed in the SE.

The NRC has found that CYAPCO meets the criteria for an exemption in § 50.12. The Atomic Energy Act of 1954, as amended, and the Commission's regulations permit the Commission to grant exemptions from the regulations in 10 CFR part 50. Granting exemptions is consistent with the authority provided to the Commission in the Atomic Energy Act of 1954, as amended. Therefore, the exemption is authorized by law.

As noted in Section 2.0, ''Discussion,'' above, CYAPCO's compliance with the EP requirements in effect before the effective date of the EP Final Rule demonstrated reasonable assurance of adequate protection of the public health and safety and common defense and security. In its SE, the NRC staff explains that CYAPCO's implementation of its HNP DEP, with the exemptions, will continue to provide this reasonable assurance of adequate protection. Thus, granting the requested exemptions will not present an undue risk to public health or safety and is not inconsistent with the common defense and security.

For the Commission to grant an exemption, special circumstances must exist. Under § 50.12(a)(2)(ii), special circumstances are present when ''[a]pplication of the regulation in the particular circumstances would not serve the underlying purpose of the rule or is not necessary to achieve the underlying purpose of the rule.'' These special circumstances exist here. The NRC has determined that CYAPCO's compliance with the regulations that the staff describes in its SE is not necessary for the licensee to demonstrate that, under its emergency plan, there is reasonable assurance that adequate protective measures can and will be taken in the event of a radiological emergency. Consequently, special circumstances are present because requiring CYAPCO to comply with the regulations that the staff describes in its SE is not necessary to achieve the underlying purpose of the EP regulations.

5.0 Environmental Assessment (EA)

Identification of Proposed Action

By letter dated July 20, 2012, CYAPCO (ADAMS Accession No. ML12181A114) submitted an exemption request in accordance with 10 CFR 50.12 from specific EP requirements of 10 CFR 50.47 and Appendix E to 10 CFR part 50 for the HNP. Specifically, the exemption would eliminate unnecessary requirements associated with offsite consequences, protective actions, hostile action and emergency facilities due to the current status of the HNP.

Need for the Proposed Action

In accordance with 10 CFR 50.82, the 10 CFR part 50 licensed area for the HNP has been reduced to a small area surrounding the ISFSI. In this condition, the HNP poses a significantly reduced risk to public health and safety from design basis accidents or credible beyond design basis accidents since these cannot result in radioactive releases which exceed EPA PAGS at the site boundary. Because of this reduced risk, compliance with all the requirements in 10 CFR 50.47 and 10 CFR part 50, Appendix E is not appropriate. The requested exemption from portions of 10 CFR 50.47 and 10 CFR part 50, Appendix E is needed to continue implementation of the HNP ISFSI Emergency Plan that is appropriate for a stand-alone ISFSI and is commensurate with the reduced risk posed by the facility. The requested exemption will allow spent fuel to continue to be stored safely without imposing burdensome and costly new requirements that provide no increased safety benefit.

Environmental Impacts of the Proposed Action

The NRC has determined that, given the continued implementation of the HNP DEP, with the exemptions noted in the SE, no credible events would result in doses to the public beyond the owner controlled area boundary that would exceed the EPA PAGs. Additionally, the staff has concluded that the HNP DEP, with the exemptions described in the SE, provides for an acceptable level of emergency preparedness at the HNP in its shutdown and defueled condition, and also provides reasonable assurance that adequate protective measures can and will be taken in the event of a radiological emergency at the HNP. Based on these findings, the NRC concludes that there are no radiological environmental impacts due to granting the approval of the exemption, the proposed action will not increase the probability or consequences of accidents, no changes are being made in the types or quantities of effluents that may be released offsite, and there is no significant increase in occupational or public radiation exposure. Therefore, there are no significant radiological environmental impacts associated with the proposed action. The proposed action does not affect non-radiological plant effluents and has no other environmental impact. Therefore, there are no significant non-radiological impacts associated with the proposed action. Based on the assessment above, the proposed action will not have a significant effect on the quality of the human environment.

Alternative to the Proposed Action

Since there is no significant environmental impact associated with the proposed action, any alternatives with equal or greater environmental impact are not evaluated. The alternative to the proposed action would be to deny approval of the exemption. This alternative would have the same environmental impact.

Finding of No Significant Impact

The environmental impacts of the proposed action have been reviewed in accordance with the requirements set forth in 10 CFR part 51. Based upon the EA, the Commission finds that the proposed action of granting an exemption will not significantly impact the quality of the human environment. Accordingly, the Commission has determined not to prepare an environmental impact statement for the proposed exemption.

6.0 Conclusion

The staff concluded that the licensee's request for an exemption from certain requirements of 10 CFR 50.47(b) and 10 CFR part 50, Appendix E, Section IV as specified in the SE is acceptable in view of the greatly reduced offsite radiological consequences associated with the ISFSI. The exemption request has been reviewed against the acceptance criteria included in 10 CFR

50.47, Appendix E to 10 CFR part 50, 10 CFR 72.32 and Interim Staff Guidance—16. The review considered the ISFSI and the low likelihood of any credible accident resulting in radiological releases requiring offsite protective measures. These evaluations were supported by the previously documented licensee and staff accident analyses. The staff concludes that: the HNP Emergency Plan provides: (1) An adequate basis for an acceptable state of emergency preparedness; and (2) the Emergency Plan, in conjunction with arrangements made with offsite response agencies, provides reasonable assurance that adequate protective measures can and will be taken in the event of a radiological emergency at the HNP facility.

As discussed in Section 5.0, the Commission has determined that these exemptions will not significantly impact the quality of the human environment. Accordingly, the Commission has determined not to prepare an environmental impact statement for the proposed exemptions.

The NRC has determined that pursuant to 10 CFR 50.12, the exemptions described in the SE are authorized by law, will not endanger life or property or the common defense and security, and are otherwise in the public interest, and special circumstances are present. Therefore, the NRC hereby grants the exemptions listed in the SE, which are effective upon issuance.

7.0 Further Information

Documents related to this action, including the application for renewal and supporting documentation, are available electronically at the NRC's Electronic Reading Room at *http://www.nrc.gov/reading-rm/adams.html.* From this site, you can access the NRC's ADAMS, which provides text and image files of NRC's public documents. If you do not have access to ADAMS or if there are problems in accessing the documents located in ADAMS, contact the NRC Public Document Room (PDR) Reference staff at 1–800–397–4209, 301–415–4737 or by email to *pdr.resource@nrc.gov.* These documents may also be viewed electronically on the public computers located at the NRC's PDR, O 1 F21, One White Flint North, 11555 Rockville Pike, Rockville, MD 20852. The PDR reproduction contractor will copy documents for a fee.

Dated at Rockville, Maryland, this 19th day of April, 2013.

For the Nuclear Regulatory Commission.

Mark D. Lombard,

Director, Division of Spent Fuel Storage and Transportation, Office of Nuclear Material Safety and Safeguards.

[FR Doc. 2013–10680 Filed 5–3–13; 8:45 am]

BILLING CODE 7590–01–P

POSTAL REGULATORY COMMISSION

[Docket Nos. MC2013–46 and CP2013–60; Order No. 1706]

New Competitive Product

AGENCY: Postal Regulatory Commission.

ACTION: Notice.

SUMMARY: The Commission is noticing a recent Postal Service filing concerning the addition of Parcel Return Service Contract 4 to the competitive product list. This notice informs the public of the filing, invites public comment, and takes other administrative steps.

DATES: *Comments are due:* May 7, 2013.

ADDRESSES: Submit comments electronically via the Commission's Filing Online system at *http://www.prc.gov.* Those who cannot submit comments electronically should contact the person identified in the **FOR FURTHER INFORMATION CONTACT** section by telephone for advice on filing alternatives.

FOR FURTHER INFORMATION CONTACT: Stephen L. Sharfman, General Counsel, at 202–789–6820.

SUPPLEMENTARY INFORMATION:

Table of Contents

I. Introduction
II. Notice of Filings
III. Ordering Paragraphs

I. Introduction

Pursuant to 39 U.S.C. 3642 and 39 CFR 3020.30 *et seq.,* the Postal Service filed a request and associated supporting information to add Parcel Return Service Contract 4 to the competitive product list.[1] The Postal Service asserts that Parcel Return Service Contract 4 is a competitive product ''not of general applicability'' within the meaning of 39 U.S.C. 3632(b)(3). *Id.* at 1. The Request has been assigned Docket No. MC2013–46.

The Postal Service contemporaneously filed an agreement related to the proposed new product (Agreement). *Id.* Attachment B. The Agreement has been assigned Docket No. CP2013–60.

Request. In support of its Request, the Postal Service filed six attachments:

- Attachment A—a redacted copy of Governors' Decision No. 11–6;
- Attachment B—a redacted copy of the Agreement;
- Attachment C—a proposed change in the Mail Classification Schedule competitive product list;
- Attachment D—a Statement of Supporting Justification as required by 39 CFR 3020.32;
- Attachment E—a certification of compliance with 39 U.S.C. 3633(a); and
- Attachment F—an application for non-public treatment of materials to maintain redacted portions of the Agreement and supporting documents under seal.

In the Statement of Supporting Justification, Dennis R. Nicoski, Manager, Field Sales Strategy and Contracts, asserts that the service to be provided under the Agreement will cover its attributable costs, make a positive contribution to institutional costs, and increase contribution toward the requisite 5.5 percent of the Postal Service's total institutional costs. *Id.* Attachment D at 1. Thus, Mr. Nicoski contends there will be no issue of subsidization of competitive products by market dominant products as a result of this contract. *Id.*

Related contract. A redacted version of the Agreement is included with the Request. The Agreement will become effective 1 business day following the day that the Commission provides all necessary regulatory approval. *Id.* Attachment B at 2. The Agreement is scheduled to expire 3 years after its effective date but may be terminated earlier by either party with 30 days' written notice. *Id.* The Postal Service represents that the Agreement is consistent with 39 U.S.C. 3633(a). *Id.* Attachment E.

The Postal Service filed much of the supporting materials, including the Agreement, under seal. *Id.* Attachment F. It maintains that the Agreement and related financial information, including the customer's name and the accompanying analyses that provide underlying costs and assumptions, pricing formulas, and information concerning the customer's mailing profile, should remain confidential. *Id.* Attachment F at 3. It also requests that the Commission order that non-public treatment of all customer-identifying information be extended indefinitely, instead of ending after 10 years. *Id.* at 7.

[1] Request of the United States Postal Service to Add Parcel Return Service Contract 4 to Competitive Product List and Notice of Filing (Under Seal) of Unredacted Governors' Decision, Contract, and Supporting Data, April 29, 2013 (Request).

II. Notice of Filings

The Commission establishes Docket Nos. MC2013–46 and CP2013–60 for consideration of the Request pertaining to the proposed Parcel Return Service Contract 4 product and the related Agreement, respectively.

Interested persons may submit comments on whether the Postal Service's filings in the captioned dockets are consistent with the policies of 39 U.S.C. 3632, 3633, or 3642 and 39 CFR part 3015 and 39 CFR 3020, subpart B. Comments are due no later than May 7, 2013. The public portions of these filings can be accessed via the Commission's Web site (*http://www.prc.gov*).

The Commission appoints Kenneth R. Moeller to serve as Public Representative in these dockets.

III. Ordering Paragraphs

It is ordered:

1. The Commission establishes Docket Nos. MC2013–46 and CP2013–60 for consideration of the matters raised in each docket.
2. Pursuant to 39 U.S.C. 505, Kenneth R. Moeller is appointed to serve as an officer of the Commission (Public Representative) to represent the interests of the general public in these proceedings.
3. Comments by interested persons in these proceedings are due no later than May 7, 2013.
4. The Secretary shall arrange for publication of this order in the **Federal Register**.

By the Commission.

Ruth Ann Abrams,

Acting Secretary.

[FR Doc. 2013–10583 Filed 5–3–13; 8:45 am]

BILLING CODE 7710–FW–P

POSTAL REGULATORY COMMISSION

[Docket No. MC2013–47 and CP2013–61; Order No. 1707]

New Postal Product

AGENCY: Postal Regulatory Commission.

ACTION: Notice.

SUMMARY: The Commission is noticing a recent Postal Service filing concerning the addition of Priority Mail Contract 58 to the competitive product list. This notice informs the public of the filing, invites public comment, and takes other administrative steps.

DATES: *Comments are due:* May 7, 2013.

ADDRESSES: Submit comments electronically via the Commission's Filing Online system at *http://www.prc.gov.* Those who cannot submit comments electronically should contact the person identified in the **FOR FURTHER INFORMATION CONTACT** section by telephone for advice on filing alternatives.

FOR FURTHER INFORMATION CONTACT: Stephen L. Sharfman, General Counsel, at 202–789–6820.

SUPPLEMENTARY INFORMATION:

Table of Contents

I. Introduction
II. Notice of Filings
III. Ordering Paragraphs

I. Introduction

In accordance with 39 U.S.C. 3642 and 39 CFR 3020.30 *et seq.,* the Postal Service filed a formal request and associated supporting information to add Priority Mail Contract 58 to the competitive product list.[1] It asserts that Priority Mail Contract 58 is a competitive product ''not of general applicability'' within the meaning of 39 U.S.C. 3632(b)(3). Request at 1. The Request has been assigned Docket No. MC2013–47.

The Postal Service contemporaneously filed a redacted contract related to the proposed new product under 39 U.S.C. 3632(b)(3) and 39 CFR 3015.5. *Id.* Attachment B. The instant contract has been assigned Docket No. CP2013–61.

Request. To support its Request, the Postal Service filed six attachments as follows:

- Attachment A—a redacted copy of Governors' Decision No. 11–6, authorizing the new product;
- Attachment B—a redacted copy of the contract;
- Attachment C—proposed changes to the Mail Classification Schedule competitive product list with the addition underlined;
- Attachment D—a Statement of Supporting Justification as required by 39 CFR 3020.32;
- Attachment E—a certification of compliance with 39 U.S.C. 3633(a); and
- Attachment F—an application for non-public treatment of materials to maintain redacted portions of the contract and related financial information under seal.

In the Statement of Supporting Justification, Dennis R. Nicoski, Manager, Field Sales Strategy and Contracts, asserts that the contract will cover its attributable costs, make a positive contribution to covering institutional costs, and increase contribution toward the requisite 5.5 percent of the Postal Service's total institutional costs. *Id.* Attachment D at 1. Mr. Nicoski contends that there will be no issue of market dominant products subsidizing competitive products as a result of this contract. *Id.*

Related contract. The Postal Service included a redacted version of the related contract with the Request. *Id.* Attachment B. The contract is scheduled to become effective 1 business day after the day on which the Commission issues all necessary regulatory approval. *Id.* at 2. The contract will expire 3 years from the effective date unless, among other things, either party terminates the agreement upon 30 days' written notice to the other party. *Id.* at 3. The contract also allows two 90-day extensions of the agreement if the preparation of a successor agreement is active and the Commission is notified within 7 days of the contract's expiration. *Id.* The Postal Service represents that the contract is consistent with 39 U.S.C. 3633(a). *Id.* Attachment E.

The Postal Service filed much of the supporting materials, including the related contract, under seal. *Id.* Attachment F. It maintains that the redacted portions of the Governors' Decision, contract, customer-identifying information, and related financial information, should remain confidential. *Id.* at 3. This information includes the price structure, underlying costs and assumptions, pricing formulas, information relevant to the customer's mailing profile, and cost coverage projections. *Id.* The Postal Service asks the Commission to protect customer-identifying information from public disclosure indefinitely. *Id.* at 7.

II. Notice of Filings

The Commission establishes Docket Nos. MC2013–47 and CP2013–61 to consider the Request pertaining to the proposed Priority Mail Contract 58 product and the related contract, respectively.

Interested persons may submit comments on whether the Postal Service's filings in the captioned dockets are consistent with the policies of 39 U.S.C. 3632, 3633, or 3642, 39 CFR 3015.5, and 39 CFR part 3020, subpart B. Comments are due no later than May 7, 2013. The public portions of these filings can be accessed via the Commission's Web site (*http://www.prc.gov*).

The Commission appoints Cassie D'Souza to serve as Public Representative in these dockets.

[1] Request of the United States Postal Service to Add Priority Mail Contract 58 to Competitive Product List and Notice of Filing (Under Seal) of Unredacted Governors' Decision, Contract, and Supporting Data, April 29, 2013 (Request).

III. Ordering Paragraphs

It is ordered:

1. The Commission establishes Docket Nos. MC2013–47 and CP2013–61 to consider the matters raised in each docket.

2. Pursuant to 39 U.S.C. 505, Cassie D'Souza is appointed to serve as an officer of the Commission (Public Representative) to represent the interests of the general public in these proceedings.

3. Comments by interested persons in these proceedings are due no later than May 7, 2013.

4. The Secretary shall arrange for publication of this order in the **Federal Register**.

By the Commission.

Ruth Ann Abrams,

Acting Secretary.

[FR Doc. 2013–10585 Filed 5–3–13; 8:45 am]

BILLING CODE 7710–FW–P

POSTAL SERVICE

Product Change—Priority Mail Negotiated Service Agreement

AGENCY: Postal Service™.

ACTION: Notice.

SUMMARY: The Postal Service gives notice of filing a request with the Postal Regulatory Commission to add a domestic shipping services contract to the list of Negotiated Service Agreements in the Mail Classification Schedule's Competitive Products List.

DATES: *Effective date:* May 6, 2013.

FOR FURTHER INFORMATION CONTACT: Elizabeth A. Reed, 202–268–3179.

SUPPLEMENTARY INFORMATION: The United States Postal Service® hereby gives notice that, pursuant to 39 U.S.C. 3642 and 3632(b)(3), on April 29, 2013, it filed with the Postal Regulatory Commission a *Request of the United States Postal Service to Add Priority Mail Contract 58 to Competitive Product List.* Documents are available at *www.prc.gov,* Docket Nos. MC2013–47, CP2013–61.

Stanley F. Mires,

Attorney, Legal Policy & Legislative Advice.

[FR Doc. 2013–10603 Filed 5–3–13; 8:45 am]

BILLING CODE 7710–12–P

POSTAL SERVICE

Product Change—Parcel Return Service Negotiated Service Agreement

AGENCY: Postal Service™.

ACTION: Notice.

SUMMARY: The Postal Service gives notice of filing a request with the Postal Regulatory Commission to add a domestic shipping services contract to the list of Negotiated Service Agreements in the Mail Classification Schedule's Competitive Products List.

DATES: *Effective date:* May 6, 2013.

FOR FURTHER INFORMATION CONTACT: Elizabeth A. Reed, 202–268–3179.

SUPPLEMENTARY INFORMATION: The United States Postal Service® hereby gives notice that, pursuant to 39 U.S.C. 3642 and 3632(b)(3), on April 29, 2013, it filed with the Postal Regulatory Commission a *Request of the United States Postal Service to Add Parcel Return Service Contract 4 to Competitive Product List.* Documents are available at *www.prc.gov,* Docket Nos. MC2013–46, CP2013–60.

Stanley F. Mires,

Attorney, Legal Policy & Legislative Advice.

[FR Doc. 2013–10587 Filed 5–3–13; 8:45 am]

BILLING CODE 7710–12–P

SECURITIES AND EXCHANGE COMMISSION

Proposed Collection; Comment Request

Upon Written Request, Copies Available From: Securities and Exchange Commission, Office of Investor Education and Advocacy, Washington, DC 20549–0213.

Extension:

Rule 6h–1; SEC File No. 270–497, OMB Control No. 3235–0555.

Notice is hereby given that pursuant to the Paperwork Reduction Act of 1995 (44 U.S.C. 3501 *et seq.*) (''PRA''), the Securities and Exchange Commission (''Commission'') is soliciting comments on the existing collection of information provided for in Rule 6h–1 (17 CFR 240.6h–1) under the Securities Exchange Act of 1934, as amended (''Act'') (15 U.S.C. 78a *et seq.*). The Commission plans to submit this existing collection of information to the Office of Management and Budget (''OMB'') for extension and approval.

Section 6(h) of the Act (15 U.S.C. 78f(h)) requires national securities exchanges and national securities associations that trade security futures products to establish listing standards that, among other things, require that: (i) Trading in such products not be readily susceptible to price manipulation; and (ii) the market on which the security futures product trades has in place procedures to coordinate trading halts with the listing market for the security or securities underlying the security futures product. Rule 6h–1 implements these statutory requirements and requires that (1) the final settlement price for each cash-settled security futures product fairly reflects the opening price of the underlying security or securities, and (2) the exchanges and associations trading security futures products halt trading in any security futures product for as long as trading in the underlying security, or trading in 50% of the underlying securities, is halted on the listing market.

It is estimated that approximately 1 respondent per year, consisting of a designated contract market not already registered as a national securities exchange under Section 6(g) of the Exchange Act that seeks to list or trade security futures products, will incur an average burden of 10 hours per year to comply with this rule, for a total burden of 10 hours. At an average cost per hour of approximately $379, the resultant total internal cost of compliance for all respondents is $3,790 per year (1 respondent × 10 hours/respondent × $379/hour).

Written comments are invited on: (a) Whether the proposed collection of information is necessary for the proper performance of the functions of the Commission, including whether the information shall have practical utility; (b) the accuracy of the Commission's estimates of the burden of the proposed collection of information; (c) ways to enhance the quality, utility, and clarity of the information collected; and (d) ways to minimize the burden of the collection of information on respondents, including through the use of automated collection techniques or other forms of information technology. Consideration will be given to comments and suggestions submitted in writing within 60 days of this publication.

An agency may not conduct or sponsor, and a person is not required to respond to, a collection of information under the PRA unless it displays a currently valid OMB control number.

Please direct your written comments to: Thomas Bayer, Director/Chief Information Officer, Securities and Exchange Commission, c/o Remi Pavlik-Simon, 6432 General Green Way, Alexandria, Virginia 22312 or send an email to: *PRA_Mailbox@sec.gov.*

Dated: May 1, 2013.

Kevin M. O'Neill,

Deputy Secretary.

[FR Doc. 2013–10628 Filed 5–3–13; 8:45 am]

BILLING CODE 8011–01–P

SECURITIES AND EXCHANGE COMMISSION

[Release No. 34–69477; File No. 81–939]

Notice of an Application of W2007 Grace Acquisition I, Inc. Under Section 12(h) of the Securities Exchange Act of 1934

April 30, 2013.

The Securities and Exchange Commission gives notice that W2007 Grace Acquisition I, Inc. (''W2007 Grace'') has filed an application under Section 12(h) of the Securities Exchange Act of 1934. W2007 Grace asks the Commission to issue an order conditionally exempting the company from the requirement to file reports under Section 15(d) of the Exchange Act. In its application, W2007 Grace asserts that exemptive relief would be consistent with the standards articulated in Section 12(h) because: (1) As of January 1, 2013, W2007 Grace had fewer than 300 holders of record of each class of its securities after excluding shares that the company believes are beneficially owned by a single beneficial owner through 300 trust entities formed by such owner solely for the purpose of attempting to cause the termination of the suspension of the company's reporting obligations under Section 15(d) of the Exchange Act; (2) there is limited trading activity in, and an absence of any regular market for, W2007 Grace's securities; (3) the company is not directly engaged in active operations as it is a real estate investment firm with a small economic interests in 130 hotels and no employees; and (4) to impose the reporting burdens of Section 15(d) of the Exchange Act on the company under the current circumstances would contravene the intent of Section 15(d) and Rule 12g5–1 under the Exchange Act.

For a detailed statement of the information presented, all persons are referred to W2007 Grace's application, which is available on the Commission's Internet Web site at *http://www.sec.gov/rules/other.shtml* and for Web site viewing and printing in the Commission's Public Reference Room, Station Place, 100 F Street NE., Washington, DC 20549, on official business days between the hours of 10 a.m. and 3 p.m.

The Commission also gives notice that any interested person may submit to the Commission in writing its views on any substantial facts bearing on the application or the desirability of a hearing thereon.

Any such communication or request may be submitted by any of the following methods:

Electronic Comments

- Use the Commission's Internet comment form (*http://www.sec.gov/rules/other.shtml*); or
- Send an email to *rule-comments@sec.gov*. Please include File Number 81–939 on the subject line.

Paper Comments

- Send paper comments in triplicate to Elizabeth M. Murphy, Secretary, Securities and Exchange Commission, Station Place, 100 F Street NE., Washington, DC 20549–1090.

All submissions should refer to File Number 81–939. This file number should be included on the subject line if email is used. To help the Commission process and review your comments more efficiently, please use only one method. The Commission will post all comments on the Commission's Internet Web site (*http://www.sec.gov/rules/other.shtml*). Copies of the submission, all subsequent amendments, all written statements with respect to the application filed with the Commission, and all written communications relating to the application between the Commission and any person, other than those that may be withheld from the public in accordance with the provisions of 5 U.S.C. 552, will be available for Web site viewing and printing in the Commission's Public Reference Room, Station Place, 100 F Street NE., Washington, DC 20549, on official business days between the hours of 10 a.m. and 3 p.m. All comments received will be posted without change; the Commission does not edit personal identifying information from submissions. You should submit only information that you wish to make available publicly. All submissions should be submitted on or before June 5, 2013.

Persons who request a hearing or advice as to whether a hearing is ordered will receive any notices and orders issued in this matter, including the date of the hearing (if ordered) and any postponements thereof. At any time after said date, the Commission may issue an order granting the application upon request or upon the Commission's own motion.

For the Commission, by the Division of Corporation Finance, pursuant to delegated authority.

Elizabeth M. Murphy,

Secretary.

[FR Doc. 2013–10564 Filed 5–3–13; 8:45 am]

BILLING CODE 8011–01–P

SECURITIES AND EXCHANGE COMMISSION

[Investment Company Act Release No. 30496; 812–14078]

Goldman Sachs Trust II, et al.; Notice of Application

April 29, 2013.

AGENCY: Securities and Exchange Commission (''Commission'').

ACTION: Notice of an application under section 6(c) of the Investment Company Act of 1940 (''Act'') for an exemption from section 15(a) of the Act and rule 18f–2 under the Act, as well as from certain disclosure requirements.

SUMMARY: *Summary of Application:* Applicants request an order that would permit them to enter into and materially amend subadvisory agreements without shareholder approval and would grant relief from certain disclosure requirements.

APPLICANTS: Goldman Sachs Trust II (the ''Trust''), Goldman Sachs Asset Management L.P. (''GSAM'') and Goldman Sachs Asset Management International (''GSAMI'', each of GSAM and GSAMI an ''Adviser'' and collectively, ''Advisers,'' and together with the Trust, ''Applicants'').

DATES: *Filing Dates:* The application was filed September 21, 2012, and amended on March 8, 2013.

HEARING OR NOTIFICATION OF HEARING: An order granting the application will be issued unless the Commission orders a hearing. Interested persons may request a hearing by writing to the Commission's Secretary and serving applicants with a copy of the request, personally or by mail. Hearing requests should be received by the Commission by 5:30 p.m. on May 28, 2013 and should be accompanied by proof of service on the applicants, in the form of an affidavit or, for lawyers, a certificate of service. Hearing requests should state the nature of the writer's interest, the reason for the request, and the issues contested. Persons who wish to be notified of a hearing may request notification by writing to the Commission's Secretary.

ADDRESSES: Elizabeth M. Murphy, Secretary, U.S. Securities and Exchange Commission, 100 F Street NE.,

Washington, DC 20549–1090.
Applicants: Caroline Kraus, Goldman Sachs & Co., 200 West Street, 15th Floor, New York, NY 10282.

FOR FURTHER INFORMATION CONTACT: Barbara T. Heussler, Senior Counsel, at (202) 551–6990, or Jennifer L. Sawin, Branch Chief, at (202) 551–6821 (Division of Investment Management, Office of Investment Company Regulation).

SUPPLEMENTARY INFORMATION: The following is a summary of the application. The complete application may be obtained via the Commission's Web site by searching for the file number, or an applicant using the Company name box, at *http://www.sec.gov/search/search.htm* or by calling (202) 551–8090.

Applicants' Representations

1. The Trust is organized as a Delaware statutory trust and has registered as an open-end management investment company under the Act that will offer one or more series of shares (each a ''Series''). The Trust has filed a registration statement on Form N–1A to register the offering of shares of Goldman Sachs Multi-Manager Alternatives Fund, a series of the Trust.[1] Each Subadvised Fund may offer shares with its own distinct investment objectives, policies and restrictions.

2. GSAM, a Delaware limited partnership registered with the Commission as an investment adviser under the Investment Advisers Act of 1940 (''Advisers Act''), is expected to serve as investment adviser to certain Series, in each case pursuant to an investment advisory agreement with the Trust on behalf of the Series (each a ''GSAM Investment Advisory Agreement''). GSAMI, a limited partnership organized under the laws of the United Kingdom and registered with the Commission as an investment adviser under the Advisers Act, may also serve as investment adviser to certain Series, in each case pursuant to an investment advisory agreement with the Trust on behalf of the Series (each a ''GSAMI Investment Advisory Agreement'').[2] The GSAM Investment Advisory Agreements and the GSAMI Investment Advisory Agreements are together referred to as the ''Investment Advisory Agreements''. Each Investment Advisory Agreement will be approved by the board of trustees of the Trust (the ''Board''), including a majority of the trustees who are not ''interested persons,'' as defined in section 2(a)(19) of the Act, of the Trust or the Adviser (''Independent Trustees'') and by the shareholders of the relevant Subadvised Fund in the manner required by sections 15(a) and 15(c) of the Act and rule 18f–2 under the Act.[3] Any future Adviser also will be registered with the Commission as an investment adviser under the Advisers Act and will enter into investment advisory agreements with or on behalf of future Subadvised Funds, and such future agreements shall be included in the term ''Investment Advisory Agreements.''

3. Under the terms of each Investment Advisory Agreement, the Adviser to a Subadvised Fund, subject to the oversight of the applicable Board, shall furnish a continuous investment program for the Subadvised Fund. The Adviser shall periodically review each Subadvised Fund's investment policies and strategies and based on the need of a particular Subadvised Fund may recommend changes to the investment policies and strategies of the Subadvised Fund for consideration by its Board. For its services to each Subadvised Fund, the Adviser shall receive an investment advisory fee from that Subadvised Fund as specified in the applicable Investment Advisory Agreement based on each Subadvised Fund's average daily total or net assets. The terms of the Investment Advisory Agreements also permit the applicable Adviser, subject to the approval of the relevant Board, including a majority of the Independent Trustees, and the shareholders of the applicable Subadvised Fund (if required by applicable law), to delegate portfolio management responsibilities of all or a portion of the assets of the Subadvised Fund to one or more subadvisers (''Subadvisers''). Each Subadviser will be an investment adviser as defined in section 2(a)(20) of the Act, and either registered with the Commission as an investment adviser under the Advisers Act or not subject to such registration. The Adviser shall have overall responsibility for the management and investment of the assets of each Subadvised Fund and, with respect to each Subadvised Fund, the Adviser's responsibilities shall include, for example, recommending the removal or replacement of Subadvisers, and determining the portion of that Subadvised Fund's assets to be managed by any given Subadviser and reallocating those assets as necessary from time to time. The Adviser shall evaluate, select and recommend Subadvisers to manage the assets of Subadvised Fund, and shall monitor and review the Subadviser and its performance and its compliance with that Subadvised Fund's investment policies and restrictions. For services provided under each Subadvisory Agreement, it is currently intended that the applicable Subadviser will receive from the applicable Adviser a fee based on a percentage of the Subadvised Fund's average daily total or net assets (''Subadvisory fees''). All Subadvisers are expected to be compensated by the applicable Adviser out of the advisory fees the Adviser receives pursuant to the relevant Investment Advisory Agreement. As a matter of convenience, the applicable Adviser may request that (a) amounts payable to a Subadviser by the Adviser be transmitted directly to the Subadviser by the Subadvised Fund and (b) that such amount be deducted from the amounts payable by the Subadvised Fund to the Adviser. Subadvised Funds may directly pay advisory fees to Subadvisers in the future, although any amendment to a Subadvisory Agreement that would increase the total management and advisory fees payable by a Subadvised Fund would require shareholder approval.

4. Applicants request an order to permit the Adviser, subject to Board approval, to select certain Subadvisers to manage all or a portion of the assets of a Subadvised Fund pursuant to a Sub-Advisory Agreement and materially amend Sub-Advisory Agreements without obtaining shareholder approval. The requested relief will not extend to any Subadviser that is an affiliated person, as defined in section 2(a)(3) of the Act, of the Trust, a Subadvised Fund or the Adviser, other than by reason of serving as a Subadviser to a Subadvised Fund (''Affiliated Subadviser'').

5. Applicants also request an order exempting the Subadvised Funds from certain disclosure provisions described

[1] Applicants request that the relief sought herein apply to the Applicants, as well as to any future Series of the Trust and to any other existing or future registered open-end investment company or series thereof that: (a) is advised by either GSAM, GSAMI or their successors (the foregoing advisers being included in the term ''Adviser,'' and any such series or investment company, including the Trust and its Series, a ''Fund''); (b) uses the manager of managers structure described in this Application (''Manager of Managers Structure''); and (c) complies with the terms and conditions of this Application (the ''Subadvised Funds,'' and each a ''Subadvised Fund''). The only Trust that currently intends to rely on the requested order is named as an Applicant. For purposes of the requested order, ''successor'' is limited to an entity that results from a reorganization into another jurisdiction or a change in the type of business organization. If the name of any Subadvised Fund contains the name of a Subadviser, the name of the Adviser that serves as the primary adviser to that Subadvised Fund or a trademark or trade name that is owned by or publicly used to identify that Adviser will precede the name of the Subadviser.

[2] GSAM and GSAMI are wholly-owned subsidiaries of the Goldman Sachs Group, Inc.

[3] The term ''Board'' also includes the board of trustees or directors of a future Subadvised Fund.

below that may require the Applicants to disclose fees paid to each Subadviser by the Adviser or a Subadvised Fund. Applicants seek an order to permit each Subadvised Fund to disclose (as a dollar amount and a percentage of a Subadvised Fund's total or net assets) only: (a) The aggregate fees paid to the Subadvised Fund's Adviser and any Affiliated Subadvisers; and (b) the aggregate fees paid to Subadvisers other than Affiliated Subadvisers (collectively, the ''Aggregate Fee Disclosure''). A Subadvised Fund that employs an Affiliated Subadviser will provide separate disclosure of any fees paid to the Affiliated Subadviser.

Applicants' Legal Analysis

1. Section 15(a) of the Act provides, in relevant part, that it is unlawful for any person to act as an investment adviser to a registered investment company except pursuant to a written contract that has been approved by the vote of a majority of the company's outstanding voting securities. Rule 18f–2 under the Act provides that each series or class of stock in a series investment company affected by a matter must approve that matter if the Act requires shareholder approval.

2. Form N–1A is the registration statement used by open-end investment companies. Item 19(a)(3) of Form N–1A requires disclosure of the method and amount of the investment adviser's compensation.

3. Rule 20a–1 under the Act requires proxies solicited with respect to an investment company to comply with Schedule 14A under the Securities Exchange Act of 1934 (''Exchange Act''). Items 22(c)(1)(ii), 22(c)(1)(iii), 22(c)(8) and 22(c)(9) of Schedule 14A, taken together, require a proxy statement for a shareholder meeting at which the advisory contract will be voted upon to include the ''rate of compensation of the investment adviser,'' the ''aggregate amount of the investment adviser's fees,'' a description of the ''terms of the contract to be acted upon,'' and, if a change in the advisory fee is proposed, the existing and proposed fees and the difference between the two fees.

4. Regulation S–X sets forth the requirements for financial statements required to be included as part of a registered investment company's registration statement and shareholder reports filed with the Commission. Sections 6–07(2)(a), (b) and (c) of Regulation S–X require a registered investment company to include in its financial statement information about the investment advisory fees.

5. Section 6(c) of the Act provides that the Commission may exempt any person, security, or transaction or any class or classes of persons, securities, or transactions from any provisions of the Act, or from any rule thereunder, if such exemption is necessary or appropriate in the public interest and consistent with the protection of investors and the purposes fairly intended by the policy and provisions of the Act. Applicants state that the requested relief meets this standard for the reasons discussed below.

6. Applicants assert that the shareholders expect the Adviser, subject to the review and approval of the Board, to select the Subadvisers who are best suited to achieve the Subadvised Fund's investment objective. Applicants assert that, from the perspective of the shareholder, the role of the Subadviser is substantially equivalent to the role of the individual portfolio managers employed by an investment adviser to a traditional investment company. Applicants state that requiring shareholder approval of each Subadvisory Agreement would impose unnecessary delays and expenses on the Subadvised Funds and may preclude the Subadvised Funds from acting promptly when the Adviser and Board consider it appropriate to hire Subadvisers or amend Subadvisory Agreements. Applicants note that the Investment Advisory Agreement for each Subadvised Fund and Subadvisory Agreements with Affiliated Subadvisers (if any) will continue to be subject to the shareholder approval requirements of section 15(a) of the Act and rule 18f–2 under the Act.

7. If new Subadvisers are hired, the Subadvised Funds will inform shareholders of the hiring of a new Subadviser pursuant to the following procedures (''Modified Notice and Access Procedures''): (a) Within 90 days after a new Subadviser is hired for any Subadvised Fund, that Subadvised Fund will send its shareholders either a Multi-manager Notice or a Multi-manager Notice and Multi-manager Information Statement;[4] and (b) the Subadvised Fund will make the Multi-manager Information Statement available on the Web site identified in the Multi-manager Notice no later than when the Multi-manager Notice (or Multi-manager Notice and Multi-manager Information Statement) is first sent to shareholders, and will maintain it on that Web site for at least 90 days. In the circumstances described in this Application, a proxy solicitation to approve the appointment of new Subadvisers provides no more meaningful information to shareholders than the proposed Multi-manager Information Statement. Moreover, as indicated above, the applicable Board would comply with the requirements of Sections 15(a) and 15(c) of the Act before entering into or amending Sub-Advisory Agreements.

8. Applicants assert that the requested disclosure relief would benefit shareholders of the Subadvised Funds because it would improve each Adviser's ability to negotiate the fees paid to Subadvisers. Applicants state that if the Adviser is not required to disclose the Subadvisers' fees to the public, the Adviser may be able to negotiate rates that are below a Subadviser's ''posted'' amounts. Applicants submit that the requested relief will also encourage Subadvisers to negotiate lower subadvisory fees with the Adviser(s) if the lower fees are not required to be made public.

Applicants' Conditions

Applicants agree that any order granting the requested relief will be subject to the following conditions:

1. Before a Subadvised Fund may rely on the order requested herein, the operation of the Subadvised Fund in the manner described in the Application will be approved by a majority of the Subadvised Fund's outstanding voting securities as defined in the Act or, in the case of a Subadvised Fund whose public shareholders purchase shares on the basis of a prospectus containing the disclosure contemplated by condition 2 below, by the initial shareholder before such Subadvised Fund's shares are offered to the public.

2. The prospectus for each Subadvised Fund will disclose the existence, substance, and effect of any order granted pursuant to the Application. In addition, each Subadvised Fund will hold itself out to the public as employing the Manager of

[4] A ''Multi-manager Notice'' will be modeled on a Notice of Internet Availability as defined in rule 14a–16 under the Exchange Act, and specifically will, among other things: (a) Summarize the relevant information regarding the new Subadviser; (b) inform shareholders that the Multi-manager Information Statement is available on a Web site; (c) provide the Web site address; (d) state the time period during which the Multi-manager Information Statement will remain available on that Web site; (e) provide instructions for accessing and printing the Multi-manager Information Statement; and (f) instruct the shareholder that a paper or email copy of the Multi-manager Information Statement may be obtained, without charge, by contacting the Subadvised Funds.

A ''Multi-manager Information Statement'' will meet the requirements of Regulation 14C, Schedule 14C and Item 22 of Schedule 14A under the Exchange Act for an information statement, except as modified by the requested order to permit Aggregate Fee Disclosure. Multi-manager Information Statements will be filed electronically with the Commission via the EDGAR system.

Managers Structure. The prospectus will prominently disclose that the Adviser has the ultimate responsibility, subject to oversight by the Board, to oversee the Subadvisers and recommend their hiring, termination, and replacement.

3. Subadvised Funds will inform shareholders of the hiring of a new Subadviser within 90 days after the hiring of the new Subadviser pursuant to the Modified Notice and Access Procedures.

4. An Adviser will not enter into a Subadvisory Agreement with any Affiliated Subadviser unless such agreement, including the compensation to be paid thereunder, has been approved by the shareholders of the applicable Subadvised Fund.

5. At all times, at least a majority of the Board will be Independent Trustees, and the nomination of new or additional Independent Trustees will be placed within the discretion of the then-existing Independent Trustees.

6. Independent legal counsel, as defined in rule 0–1(a)(6) under the Act, will be engaged to represent the Independent Trustees. The selection of such counsel will be within the discretion of the then-existing Independent Trustees.

7. Whenever a Subadviser change is proposed for a Subadvised Fund with an Affiliated Subadviser, the Board, including a majority of the Independent Trustees, will make a separate finding, reflected in the Board minutes, that the change is in the best interests of the Subadvised Fund and its shareholders, and does not involve a conflict of interest from which the applicable Adviser or the Affiliated Subadviser derives an inappropriate advantage.

8. Whenever a Subadviser is hired or terminated, the applicable Adviser will provide the Board with information showing the expected impact on the profitability of the Adviser.

9. Each Adviser will provide the Board, no less frequently than quarterly, with information about the profitability of the Adviser on a per Subadvised Fund basis. The information will reflect the impact on profitability of the hiring or termination of any Subadviser during the applicable quarter.

10. Each applicable Adviser will provide general management services to each Subadvised Fund, including overall supervisory responsibility for the general management and investment of the Subadvised Fund's assets and, subject to review and approval of the Board, will: (i) Set the Subadvised Fund's overall investment strategies; (ii) evaluate, select, and recommend Subadvisers to manage all or a portion of the Subadvised Fund's assets; (iii) allocate and, when appropriate, reallocate the Subadvised Fund's assets among Subadvisers; (iv) monitor and evaluate the Subadvisers' performance; and (v) implement procedures reasonably designed to ensure that Subadvisers comply with the Subadvised Fund's investment objective, policies and restrictions.

11. No Trustee or officer of a Trust or of a Fund or director or officer of the applicable Adviser will own directly or indirectly (other than through a pooled investment vehicle that is not controlled by such person) any interest in a Subadviser except for (i) ownership of interests in the Adviser or any entity that controls, is controlled by or is under common control with the Adviser; or (ii) ownership of less than 1% of the outstanding securities of any class of equity or debt of any publicly traded company that is either a Subadviser or an entity that controls, is controlled by or is under common control with a Subadviser.

12. Each Subadvised Fund will disclose in its registration statement the Aggregate Fee Disclosure.

13. In the event the Commission adopts a rule under the Act providing substantially similar relief to that in the order requested in the Application, the requested order will expire on the effective date of that rule.

14. For Subadvised Funds that pay fees to a Subadviser directly from fund assets, any changes to a Subadvisory Agreement that would result in an increase in the total management and advisory fees payable by a Subadvised Fund will be required to be approved by the shareholders of the Subadvised Fund.

For the Commission, by the Division of Investment Management, under delegated authority.

Kevin M. O'Neill,

Deputy Secretary.

[FR Doc. 2013–10606 Filed 5–3–13; 8:45 am]

BILLING CODE 8011–01–P

SECURITIES AND EXCHANGE COMMISSION

[Investment Company Act Release No. 30497; 812–14135]

Beverly Hills Bancorp Inc.; Notice of Application

April 30, 2013.

AGENCY: Securities and Exchange Commission (the ''Commission'').

ACTION: Notice of application for an order under sections 6(c) and 6(e) of the Investment Company Act of 1940 (''Act'') for an exemption from all provisions of the Act, except sections 9, 17(a), 17(d), 17(e), 17(f), 36 through 45, and 47 through 51 of the Act and the rules thereunder, modified as discussed in the application.

SUMMARY: *Summary of Application:* The requested order would exempt the applicant, Beverly Hills Bancorp Inc. (''BHBC''), from certain provisions of the Act until the earlier of one year from the date of the requested order or such time as BHBC would no longer be required to register as an investment company under the Act. The requested exemption would extend an exemption originally granted until May 15, 2013.[1]

DATES: *Filing Dates:* The application was filed on March 15, 2013 and amended on April 26, 2013.

HEARING OR NOTIFICATION OF HEARING: An order granting the application will be issued unless the Commission orders a hearing. Interested persons may request a hearing by writing to the Commission's Secretary and serving applicants with a copy of the request, personally or by mail. Hearing requests should be received by the Commission by 5:30 p.m. on May 23, 2013 and should be accompanied by proof of service on applicants, in the form of an affidavit or, for lawyers, a certificate of service. Hearing requests should state the nature of the writer's interest, the reason for the request, and the issues contested. Persons who wish to be notified of a hearing may request notification by writing to the Commission's Secretary.

ADDRESSES: Secretary, U.S. Securities and Exchange Commission, 100 F Street NE., Washington, DC 20549–1090. Applicant, Post Office Box 8280, Calabasas, CA 91372.

FOR FURTHER INFORMATION CONTACT: Deepak Pai, Senior Counsel, at (202) 551–6876, or Mary Kay Frech, Branch Chief, at (202) 551–6821 (Division of Investment Management, Exemptive Applications Office).

SUPPLEMENTARY INFORMATION: The following is a summary of the application. The complete application may be obtained via the Commission's Web site by searching for the file number, or an applicant using the Company name box, at *http://www.sec.gov/search/search.htm* or by calling (202) 551–8090.

Applicant's Representations

1. BHBC is a bank holding company that conducted its banking and lending

[1] Beverly Hills Bancorp Inc., Investment Company Act Release Nos. 30036 (April 18, 2012) (notice) and 30064 (May 15, 2012) (order) (''Original Order'').

operations through its wholly-owned subsidiary First Bank of Beverly Hills, a California banking corporation (the ''Bank''). From its incorporation in 1996 until April 24, 2009, the Bank was the source of substantially all of BHBC's revenues and income. The Bank sustained substantial losses in its real estate loan and mortgage-backed securities portfolios, and as of December 31, 2008, it no longer met applicable regulatory capital requirements. As a result, on February 13, 2009, the Federal Deposit Insurance Corporation (''FDIC'') and the California Department of Financial Institutions (the ''CDFI'') issued an order requiring the Bank to increase its regulatory capital within 60 days. Because the Bank was unable to increase its regulatory capital within the specified time period, on April 24, 2009, the CDFI closed the Bank and the FDIC was appointed as the Bank's receiver.

2. BHBC has one class of common stock outstanding, which it voluntarily delisted from the NASDAQ Global Select Market on February 12, 2009. On February 19, 2009, BHBC deregistered its common stock under Section 12(g) of the Securities Exchange Act of 1934, as amended (the ''Exchange Act''), and on March 13, 2009, its reporting obligations under Section 15(d) of the Exchange Act were suspended. As such, BHBC is no longer subject to the reporting requirements of the Exchange Act and its common stock is traded on the Pink Sheets. As of February 28, 2013, BHBC had 79 holders of record.

3. BHBC has options outstanding under an equity incentive plan, the 2002 Equity Participation Plan (the ''Plan''). All outstanding awards under the Plan were granted prior to the FDIC's appointment as receiver for the Bank. As of February 28, 2013, the only options outstanding under the Plan are options to purchase 120,000 shares of BHBC common stock, all of which are held by four persons, each of whom is a director and/or officer of BHBC. BHBC will not issue any additional awards under the Plan.

4. As of January 31, 2013, on a consolidated basis, for financial reporting purposes BHBC has assets of $7.9 million, liabilities of $40.4 million, and a stockholders' equity of negative $32.5 million. On a non-consolidated basis, BHBC's assets total approximately $6.3 million. BHBC currently has invested the assets in Permitted Securities (as defined below) since the Original Order.

5. BHBC has several direct or indirect wholly owned subsidiaries, none of which has any ongoing business or operations. As of January 31, 2013, the following assets were held by BHBC subsidiaries: (i) Wilshire Acquisitions Corporation (''Wilshire Asquisitions'') has assets with a book value of $161,936 consisting of accrued interest and prepaid expenses related to a subsidiary trust; (ii) WFC Inc. has assets with a book value of $331,589 consisting of approximately 16 small consumer and residential mortgage loans, cash, and prepaid expenses; and (iii) BH Commercial Capital I, Inc. has assets with a book value of $1,084,799 consisting of two secured commercial real estate loans (collectively, the ''Subsidiary Assets''). In addition, BHBC also either directly or indirectly owns the common securities of two subsidiary trusts that were formed in connection with offerings of trust preferred securities in which the trust subsidiaries issued their common securities to BHBC or Wilshire Acquisitions and their preferred securities to third party investors. The subsidiary trusts then loaned all the proceeds of the sale of trust preferred securities to BHBC or Wilshire Acquisitions in exchange for junior subordinated debentures (the ''Subordinated Debentures''). The subsidiary trusts have no assets other than the Subordinated Debentures.

6. BHBC's liabilities consist principally of $25.8 million of the Subordinated Debentures issued to its two direct trust subsidiaries and $10.3 million of Subordinated Debentures issued to its indirect trust subsidiary. In the aggregate, interest in an approximate amount of $900,000 accrues on a yearly basis pursuant to these three series of Subordinated Debentures. BHBC states that there is no public market for the Subordinated Debentures or the trust preferred securities. Under the terms of the Subordinated Debentures, BHBC may defer interest payments for up to 20 consecutive quarters.[2] On January 29, 2009, BHBC elected to exercise this right and no payments are due under the Subordinated Debentures until March, 2014.

7. BHBC may be subject to contingent liabilities of uncertain amounts related to claims associated with its former operations, as well as regulatory and stockholder claims in connection with the failure of the Bank. In addition, current and former directors and officers of the Bank are subject to two pending actions (the ''Actions'') in connection with the failure of the Bank. These are: (a) An administrative action brought by the FDIC in 2011 against two former officers (one of whom has settled) seeking certain administrative sanctions and penalties; and (b) a lawsuit brought by the FDIC in April, 2012 against the Bank's former directors (including all four current members of the board of directors of BHBC) and several former officers of the Bank for negligence, gross negligence, and breach of fiduciary duty in connection with their activities with the Bank. The latter action seeks $100.6 million in damages related to losses allegedly incurred by the Bank on certain loans.

8. BHBC states that it is subject to indemnification and expense obligations in connection with various actions brought against its current and former directors, officers, employees or agents. As a result, BHBC is indemnifying these directors and officers in connection with the Actions. The potential amount of the indemnification claim is unknown.

9. Since the Bank was placed into receivership, BHBC has had no active business or operations. Within several months of the receivership, BHBC terminated all employees, and since that time has paid two consultants on an hourly basis primarily for administrative and accounting services. BHBC does not maintain an office and is managed by its four member board of directors, which has considered various alternatives, including liquidation and acquisition of an operating business, while preserving its assets. BHBC states that because of its financial condition and contingent liabilities, pursuing these courses of action has not been feasible.

Applicant's Legal Analysis

1. Section 3(a)(1)(A) of the Act defines an investment company as any issuer who ''is or holds itself out as being engaged primarily . . . in the business of investing, reinvesting or trading in securities.'' Section 3(a)(1)(C) of the Act further defines an investment company as an issuer who is engaged in the business of investing in securities that have a value in excess of 40% of the issuer's total assets (excluding government securities and cash).

2. Section 6(c) of the Act provides that the Commission may exempt any person from any provision of the Act if such exemption is necessary or appropriate in the public interest and consistent with the protection of investors and the purposes fairly intended by the policy and provisions of the Act. Section 6(e) provides that, in connection with any order exempting an investment company from any provision of section 7, certain provisions of the Act, as specified by the Commission, shall apply to the company and other persons

[2] During the period when interest payments are being deferred, interest continues to accrue, compounding quarterly, at an annual rate equal to the interest in effect for such period and must be paid at the end of the deferral period.

dealing with the company, as if such company were a registered investment company.

3. BHBC acknowledges that it may be deemed to fall within one of the Act's definitions of an investment company. Accordingly, BHBC requests an order of the Commission pursuant to sections 6(c) and 6(e) of the Act exempting it from all provisions of the Act, subject to certain exceptions described below. BHBC requests an exemption until the earlier of one year from the date of the requested order or such time as it would no longer be required to register as an investment company under the Act. During the term of the proposed exemption, BHBC states that it will comply with sections 9, 17(a), 17(d), 17(e), 17(f), 36 through 45, and 47 through 51 of the Act and the rules thereunder, subject to certain modifications described in the application.

4. BHBC requests exemptive relief to the extent necessary to permit it to hold certain types of instruments that may be considered ''securities'', as defined in section 2(a)(36) under the Act, such as short-term U.S. government securities, certificates of deposit and deposit accounts with banks that are insured by the FDIC, shares of registered money market funds, and any instruments that are eligible for investment by money market funds consistent with rule 2a–7 under the Act (collectively, ''Permitted Securities'') without being required to register as an investment company under the Act. BHBC requests this relief in order to permit it to preserve the value of its assets for the benefit of its security holders, and submits that this relief is necessary and appropriate for the public interest.

5. In determining whether to grant relief for a company in an extended transition period, the following factors are considered: (a) Whether the failure of the company to become primarily engaged in a non-investment business or excepted business or to liquidate within one year was due to factors beyond its control; (b) whether the company's officers and employees during that period tried, in good faith, to effect the company's investment of its assets in a non-investment business or excepted business or to cause the liquidation of the company; and (c) whether the company invested in securities solely to preserve the value of its assets. BHBC believes that it meets these criteria.

6. BHBC believes its failure to become primarily engaged in a non-investment business or to liquidate within a year following the receivership of the Bank is due to factors beyond its control. The board of directors of BHBC has regularly considered the feasibility of liquidating or engaging in an operating non-investment business and concluded that it is not feasible to commence or acquire a non-investment business or liquidate as a result of BHBC's negative net worth and the uncertainties associated with actual and potential litigation and regulatory claims. BHBC states that the contingent liabilities make it impossible to liquidate BHBC and distribute its assets to creditors and make it imprudent to utilize any substantial part of its assets in an operating business. BHBC states that these circumstances are unlikely to change over the requested one-year period in light of the nature of the actual and contingent liabilities. BHBC states that it has invested its liquid assets solely to preserve the value of its assets and has invested solely in Permitted Securities since the Original Order. BHBC does not believe its current ownership of certain loans acquired prior to its receivership is inconsistent with its purpose of preserving the value of its assets for the benefit of its security holders. BHBC thus believes that the public interest will be best served by permitting it to continue to invest in Permitted Securities while its liabilities are resolved.

Applicant's Conditions

Applicant agrees that the requested order will be subject to the following conditions:

1. BHBC will not purchase or otherwise acquire any securities other than Permitted Securities, except that BHBC may acquire equity securities of an issuer that is not an ''investment company'' as defined in section 3(a) of the Act or is relying on an exclusion from the definition of ''investment company'' under section 3(c) of the Act other than section 3(c)(1) or 3(c)(7), in connection with the acquisition of an operating business as evidenced by a resolution approved by BHBC's board of directors. BHBC may continue to hold the Subsidiary Assets.

2. BHBC will not hold itself out as being engaged in the business of investing, reinvesting, owning, holding, or trading in securities.

3. BHBC will not make any primary or secondary public offerings of its securities, and it will notify its stockholders that an exemptive order has been granted pursuant to sections 6(c) and 6(e) of the Act and that BHBC and other persons, in their transactions and relations with BHBC, are subject to sections 9, 17(a), 17(d), 17(e), 17(f), 36 through 45, and 47 through 51 of the Act, and the rules thereunder, as if BHBC were a registered investment company, except as permitted by the order requested hereby.

4. Notwithstanding sections 17(a) and 17(d) of the Act, an affiliated person (as defined in section 2(a)(3) of the Act) of BHBC may engage in a transaction that otherwise would be prohibited by these sections with BHBC:

(a) If such proposed transaction is first approved by a bankruptcy court on the basis that (i) the terms thereof, including the consideration to be paid or received, are reasonable and fair to BHBC, and (ii) the participation of BHBC in the proposed transaction will not be on a basis less advantageous to BHBC than that of other participants; and

(b) in connection with each such transaction, BHBC shall inform the bankruptcy court of: (i) The identity of all of its affiliated persons who are parties to, or have a direct or indirect financial interest in, the transaction; (ii) the nature of the affiliation; and (iii) the financial interests of such persons in the transaction.

For the Commission, by the Division of Investment Management, pursuant to delegated authority.

Kevin M. O'Neill,

Deputy Secretary.

[FR Doc. 2013–10607 Filed 5–3–13; 8:45 am]

BILLING CODE 8011–01–P

SECURITIES AND EXCHANGE COMMISSION

Sunshine Act Meetings

Notice is hereby given, pursuant to the provisions of the Government in the Sunshine Act, Public Law 94–409, that the Securities and Exchange Commission will hold a Closed Meeting on Thursday, May 9, 2013 at 2:00 p.m.

Commissioners, Counsel to the Commissioners, the Secretary to the Commission, and recording secretaries will attend the Closed Meeting. Certain staff members who have an interest in the matters also may be present.

The General Counsel of the Commission, or his designee, has certified that, in his opinion, one or more of the exemptions set forth in 5 U.S.C. 552b(c)(3), (5), (7), 9(B) and (10) and 17 CFR 200.402(a)(3), (5), (7), 9(ii) and (10), permit consideration of the scheduled matters at the Closed Meeting.

Commissioner Gallagher, as duty officer, voted to consider the items listed for the Closed Meeting in a closed session.

The subject matter of the Closed Meeting will be:

institution and settlement of injunctive actions;

institution and settlement of administrative proceedings; and

other matters relating to enforcement proceedings.

At times, changes in Commission priorities require alterations in the scheduling of meeting items.

For further information and to ascertain what, if any, matters have been added, deleted or postponed, please contact the Office of the Secretary at (202) 551–5400.

Dated: May 2, 2013.

Elizabeth M. Murphy,

Secretary.

[FR Doc. 2013–10849 Filed 5–2–13; 4:15 pm]

BILLING CODE 8011–01–P

SECURITIES AND EXCHANGE COMMISSION

[Release No. 34–69399A; File No. SR–CBOE–2013–039]

Self-Regulatory Organizations; Notice of Filing and Immediate Effectiveness of Proposed Rule Change by Chicago Board Options Exchange, Incorporated Relating to Fees for the BBO Data Feed for Securities Traded on the CBOE Stock Exchange; Correction

April 30, 2013.

AGENCY: Securities and Exchange Commission.

ACTION: Notice; correction.

SUMMARY: The Securities and Exchange Commission published a document in the **Federal Register** of April 24, 2013 concerning a Notice of Filing and Immediate Effectiveness of Proposed Rule Change by Chicago Board Options Exchange, Incorporated Relating to Fees for the BBO Data Feed for Securities Traded on the CBOE Stock Exchange. The document mistakenly includes a reference to NYSE Arca, Inc. in the heading.

FOR FURTHER INFORMATION CONTACT: Jonathan Balcom, Division of Trading and Markets, Securities and Exchange Commission, 100 F Street NE., Washington, DC 20549, (202) 551–5737.

Correction

In the **Federal Register** of April 24, 2013, in FR Doc. 2013–09627, on page 24258, in the 45th line of the third column, the heading is corrected to delete ''NYSE Arca, Inc.''

Kevin M. O'Neill,

Deputy Secretary.

[FR Doc. 2013–10627 Filed 5–3–13; 8:45 am]

BILLING CODE 8011–01–P

SECURITIES AND EXCHANGE COMMISSION

[Release No. 34–69480; File No. SR–OCC–2013–04]

Self-Regulatory Organizations; The Options Clearing Corporation; Notice of Filing of Proposed Rule Change to Change the Expiration Date For Most Option Contracts to the Third Friday of the Expiration Month Instead of the Saturday Following the Third Friday

April 30, 2013.

Pursuant to Section 19(b)(1) of the Securities Exchange Act of 1934 (''Exchange Act''),[1] and Rule 19b–4 thereunder,[2] notice is hereby given that on April 17, 2013 The Options Clearing Corporation (''OCC'') filed with the Securities and Exchange Commission (''Commission'') the proposed rule change as described in Items I and II below, which Items have been substantially prepared by the clearing agency.[3] The Commission is publishing this notice to solicit comments on the proposed rule change from interested persons.

I. Clearing Agency's Statement of the Terms of Substance of the Proposed Rule Change

This proposed rule change would allow OCC to change the expiration date for most option contracts to the third Friday of the expiration month instead of the Saturday following the third Friday.

II. Clearing Agency's Statement of the Purpose of, and Statutory Basis for, the Proposed Rule Change

In its filing with the Commission, the clearing agency included statements concerning the purpose of and basis for the proposed rule change and discussed any comments it received on the proposed rule change. The text of these statements may be examined at the places specified in Item IV below. The clearing agency has prepared summaries, set forth in sections A, B, and C below, of the most significant aspects of such statements.[4]

(A) Clearing Agency's Statement of the Purpose of, and Statutory Basis for, the Proposed Rule Change

Most option contracts (''Standard Expiration Contracts'') currently expire at the ''expiration time'' (11:59 p.m. Eastern Time) on the Saturday following the third Friday of the specified expiration month (''Expiration Date'').[5] The purpose of this proposed rule change is to change the Expiration Date for Standard Expiration Contracts to the third Friday of the expiration month. (The expiration time would continue to be 11:59 p.m. Eastern Time on the Expiration Date.) The proposed change would apply only to Standard Expiration Contracts expiring after February 1, 2015, and OCC does not propose to change the Expiration Date for any outstanding option contract. The proposed change will apply only to series of option contracts opened for trading after the effective date of this proposed rule change and having Expiration Dates later than February 1, 2015. Option contracts having non-standard expiration dates (''Non-standard Expiration Contracts'') will be unaffected by this proposed rule change.[6]

In order to provide a smooth transition to the Friday expiration, OCC would, beginning June 21, 2013, move the expiration exercise procedures to Friday for all Standard Expiration Contracts even though the contracts would continue to expire on Saturday. After February 1, 2015, virtually all Standard Expiration Contracts will actually expire on Friday. The only Standard Expiration Contracts that will expire on a Saturday after February 1, 2015 are certain options that were listed prior to the effectiveness of this rule change, and a limited number of options that may be listed prior to necessary systems changes of the options exchanges, which are expected to be completed in August 2013. The exchanges have agreed that once these systems changes are made they will not open for trading any new series of option contracts with Saturday expiration dates falling after February 1, 2015.

Background

Saturday was established as the standard Expiration Date for OCC-cleared options primarily in order to allow sufficient time for processing of

[1] 15 U.S.C. 78s(b)(1).

[2] 17 CFR 240.19b–4.

[3] OCC also filed the proposed rule change as an advance notice under Section 806(e)(1) of Title VIII of the Dodd-Frank Wall Street Reform and Consumer Protection Act (''Dodd-Frank Act'') entitled the Payment, Clearing, and Settlement Supervision Act of 2010 (''Clearing Supervision Act''). 12 U.S.C. 5465(e)(1); SR–OCC–2013–802.

[4] The Commission has modified the text of the summaries prepared by the clearing agency.

[5] *See* the definition of ''expiration time'' in Article I of OCC's By-Laws.

[6] Examples of options with Non-standard Expiration Contracts include flex options, quarterly, monthly and weekly options, where the expiration exercise processing for such options presently occurs on a weekday.

option exercises, including correction of errors, while the markets were closed and positions remained fixed. However, improvements in technology and a great deal of experience have rendered Saturday expiration processing inefficient, and Saturday processing also poses unnecessary operational risk upon OCC and its clearing members. Therefore, it has been a long-term goal of OCC and its clearing members to move the expiration process for all options with Standard Expiration Contracts from Saturday to Friday night.

Eliminating Saturday expirations will allow OCC to streamline the expiration process between Standard Expiration Contracts and Non-standard Expiration Contracts, which will increase operational efficiencies and reduce operational risk for OCC and its clearing members. After the expiration date for Standard Expiration Contracts is moved to Friday night, expiration processing for standard options, quarterly options, and weekly options will all occur on the same day and will be a single, and inherently more efficient, operational process. The move to Friday night processing will also align expiration processing schedules for United States markets with expiration processing schedules for European markets and will allow affected clearing members to run a single, consistent, and efficient operational process for all U.S. equity/index options regardless of where such options are exercised. Moreover, the move to Friday night processing will also eliminate the operational risk presented by scheduling an expiration process to run on one Saturday per month when it is otherwise run weekly on Friday night. Saturdays are typically reserved for system maintenance and installs of system enhancements so Saturday expiration processes force such maintenance and installs to be rescheduled and sometimes delayed.

From a risk management perspective, the proposed rule change will compress the operational timeframe for processing option expirations such that clearing members will be required to reconcile options trades on trade date. Trade date reconciliation is a better risk management practice and will facilitate and promote the use of intra-day risk management systems by clearing members as well as move clearing members toward adopting real-time trade date reconciliation and position balancing systems.

Industry groups, clearing members, and options exchanges have been active participants in planning for the transition to the Friday expiration. In March, 2012, OCC began to discuss moving Standard Expiration Contracts to Friday expiration dates with industry groups, including two Securities Industry and Financial Markets Association (''SIFMA'') committees, the Operations and Technology Steering Committee and the Options Committee, and at two major industry conferences, the SIFMA Operations Conference and the Options Industry Conference. OCC also discussed the project with the Intermarket Surveillance Group and at an OCC Operations Roundtable. In each case, OCC received broad support for the initiative. Also, OCC surveyed all of its clearing members as well as its service bureaus and learned that a significant majority of those surveyed are currently ready to move to Friday night expiration processing. OCC has worked with the other clearing members and service bureaus so that all affected parties experience a smooth transition to Friday night expiration processing. OCC has obtained assurances from all options industry participants that they will be ready to move to Friday night expiration processing by June 2013.

Friday night expiration processing is also consistent with the long-standing rules and procedures of the options exchanges and the Financial Industry Regulatory Authority (''FINRA''),[7] which generally provide that exercise decisions with respect to Standard Expiration Contracts must be made by, and exercise instructions may not be accepted from customers after, 5:30 p.m. Eastern Time on the business day preceding expiration (usually Friday).[8] Brokerage firms may set earlier cutoff times for customers submitting exercise notices. Clearing members are permitted to submit exercise instructions after the cutoff time (''Supplementary Exercises'') only in case of errors or other unusual situations, and may be subject to fines or disciplinary actions.[9] OCC believes that the extended period between cutoff time and expiration of options is no longer necessary given modern technology.

Transition Period

Based on significant dialogue between OCC and clearing members regarding the move to Friday expiration, OCC believes that the adoption of Friday expiration for Standard Expiration Contracts is best accomplished through an appropriate transition period during which processing activity for all options, whether expiring on Friday or Saturday, would move to Friday, followed by a change in the expiration day for new series of options. In May 2012, OCC and its clearing members determined that Friday, June 21, 2013, would be an appropriate date on which to move expiration processing from Saturday to Friday night. Accordingly, OCC proposes that, beginning June 21, 2013, Friday expiration processing will be in effect for all expiring Standard Expiration Contracts, regardless of whether the contract's actual expiration date is Friday or Saturday. However, for contracts having a Saturday expiration date, exercise requests received after Friday expiration processing is complete but before the Saturday contract expiration time will continue to be processed so long as they are submitted in accordance with OCC's procedures governing such requests. After the transition period and the expiration of all existing Saturday-expiring options, expiration processing will be a single operational process and will run on Friday night for all Standard Expiration Contracts.

Friday Expiration Processing Schedule

Currently, expiration processing for Standard Expiration Contracts begins on Saturday morning at 6:00 a.m. Central Time and is completed at approximately noon Central Time when margin and settlement reports are available. The window for submission of instructions in accordance with OCC's exercise-by-exception procedures under Rule 805(d) is open from 6:00 a.m. to 9:00 a.m. Central Time on Saturday morning.[10] OCC proposes that the window for submission of exercise-by-exception instructions be open from 6:00 p.m. to 9:15 p.m. Central Time on Friday evening.[11] Friday expiration processing

[7] OCC has contacted FINRA regarding the need to review the Contrary Exercise Advisory Rule to ensure such rule is consistent with the industry effort to move to Friday expiration dates. FINRA has determined that no changes to its current rules are needed in order to accommodate the transition of expiration processing from Saturday to Friday night. FINRA has agreed that it will work with the industry to implement coordinated and appropriate modifications to its rules in order to accommodate Friday night expiration dates, which will begin on or after February 1, 2015.

[8] *See, e.g.,* FINRA Rule 4210(b)(23)(A)(iii). ''Option holders have until 5:30 p.m. Eastern Time (''ET'') on the business day immediately prior to the expiration date to make a final exercise decision to exercise or not exercise an expiring option. Members may not accept exercise instructions for customer or noncustomer accounts after 5:30 p.m. ET.'' Member firms may specify earlier cutoff times.

[9] *See* OCC Rule 805(g).

[10] OCC's exercise-by-exception procedures are described in Rule 805(d), which generally provides that each clearing member will automatically be deemed to have submitted an exercise notice immediately prior to the expiration time for all in-the-money option contracts unless the clearing member has instructed OCC otherwise in a written exercise notice.

[11] The exercise-by-exception window for weekly and quarterly expiration options is from 6:00 p.m. to 7:00 p.m. Central Time on the expiration date.

for Standard Expiration Contracts would therefore begin at 6:00 p.m. Central Time on Friday evening and end at approximately 2:00 a.m. Central Time on Saturday morning when margin and settlement reports will be available.[12]

Exercises for Standard Expiration Contracts with Saturday expirations must be allowed under the terms of the contracts. However, in order to accommodate the proposed new expiration schedule, OCC also proposes to shorten the period of time in which clearing members may submit a Supplementary Exercise notice under Rule 805(b). In addition, Rule 801 would be amended to eliminate the ability of clearing members to revoke or modify exercise notices submitted to OCC. This proposed change, along with the proposed change in the processing timeline discussed above, will more closely align OCC's expiration processing procedures with exchange rules, under which exchange members must submit exercise instructions by 5:30 p.m. Central Time on Friday and may not accept exercise instructions from customers after 4:30 p.m. Central Time on Friday. Accordingly, this proposed change will not represent a departure from current practices for clearing members or their customers.

In connection with moving from Saturday to Friday night processing and expiration, OCC reviewed other aspects of its business to confirm that there would be no unintended consequences, and concluded that there would be none. For example, OCC believes the proposed changes do not affect OCC's liquidity forecasting procedures, nor do they impact OCC's liquidity needs, since OCC's liquidity forecasts and liquidity needs are driven by settlement obligations, which occur on the same day (T+3) irrespective of the move to Friday night processing and expiration dates.

Grandfathering of Certain Options Series

Certain option contracts have already been listed on exchanges with expiration dates as distant as December 2016. Such options have Saturday expiration dates and OCC cannot change the terms of existing option contracts. In addition, clearing members have expressed a clear preference to not have open interest in any particular month with different expiration dates. Therefore, OCC will designate certain expiration dates as ''grandfathered,'' and any option contract that is listed, or may be listed in the future, that expires on a grandfathered date will have a Saturday expiration date even if such expiration date is after February 1, 2015.[13] Further, certain FLEX options that have already been accepted for clearance and have expiration dates beyond February 1, 2015, will also be designated as grandfathered. The Friday night expiration transition period processing schedule, as described above, will be in effect for any grandfathered Saturday expiration contract. In order to minimize the number of grandfathered expiration dates, exchanges have already agreed that, if there is not already a previously listed Standard Expiration Contract with an expiration in a particular month that is after February 1, 2015,[14] they will not open for trading any new series of Standard Expiration Contracts with Saturday expiration dates in such month.

Proposed Amendments to By-Laws and Rules

In order to implement the change to Friday expiration processing and eventual transition to Friday expiration for all Standard Expiration Contracts, OCC proposes to amend the definition of ''expiration date'' in Article I and certain other articles of the By-Laws. As amended, the applicability of the definition would not be limited to stock options, and the definition of ''expiration date'' in certain articles of the By-Laws therefore can be deleted in reliance on the Article I definition. OCC also proposes to amend Rule 805, and all rules supplementing or replacing Rule 805, to allow for Friday expiration processing during the transition to Friday expiration. Section 18 of Article VI of the By-Laws would also be amended to align procedures for delays in producing Expiration Exercise Reports and submission of exercise instructions with the amended expiration exercise procedures in Rule 805. Rule 801 would be amended to modify the prohibition against exercising an American-style option contract on the business day prior to its expiration date because this prohibition is necessary only for options expiring on a Saturday. The prohibition can be removed altogether when there are no longer any options expiring on a Saturday.

Rule 801 is also being amended to remove clearing members' ability to revoke or modify exercise notices in order to accommodate the proposed compressed Friday expiration processing expiration schedule. Finally, Rules 801 and 805 would be amended to allow certain determinations to be made by high-level officers of OCC, rather than the Board of Directors, in order to provide OCC with greater operational flexibility in processing exercise requests received after Friday expiration processing is complete but before the Saturday contract expiration time, and to replace various references to the expiration date of options with reference to the procedures of Rule 805.

Under the proposed rule change, OCC would preserve the ability of the options exchanges to designate (or, in the case of flexibly structured options, permit clearing members to designate) non-standard expiration dates for options, or classes or series of options, so long as the designated expiration date is not a date OCC has specified as ineligible to be an expiration date.

OCC believes the proposed rule change is consistent with the purposes and requirements of Section 17A of the Exchange Act[15] because it provides for the prompt and accurate clearance and settlement of securities transactions and the protection of securities investors and the public interest[16] by improving the processing time for clearing of option contracts, standardizing the expiration day of numerous options contracts, and requiring clearing members to reconcile options transactions on the trade date, which will facilitate and promote intra-day risk management by the clearing members. OCC believes the proposed rule change is not inconsistent with any existing OCC By-Laws or Rules.

(B) Clearing Agency's Statement on Burden on Competition

OCC does not believe that the proposed rule change would impose a burden on competition that is not necessary or appropriate in furtherance of the purposes of the Act. The proposed rule change, which will apply to all OCC clearing members, involves operational improvements that will allow OCC and its clearing members to become more operationally efficient and

[12] The proposed expiration schedule for Friday expiration processing is similar to the expiration schedule for weekly options, which begins at 6:00 p.m. Central Time on Friday evening and ends at 11:30 p.m. Central Time on Friday evening. All timeframes would be set forth in OCC's procedures and subject to change based on OCC's experience with Friday expiration processing.

[13] After OCC designates an expiration date as grandfathered, the exchanges have agreed to not permit the listing of, and OCC will not accept for clearance, any newly listed standard expiration option contract with a Friday expiration in the applicable month.

[14] Until exchanges complete certain systems enhancements in August 2013, it is possible that additional option contracts may be listed with Saturday expiration dates beyond February 1, 2015.

[15] 15 U.S.C. Section 78q–1.

[16] 15 U.S.C. Section 78q–1(b)(3)(F).

reduce operational risk. Moreover, OCC has coordinated moving to a Friday night expiration process with options industry participants and has also obtained assurance from all such participants that they are able to adhere to OCC's Friday night expiration implementation schedule. Therefore, OCC does not believe the proposed rule change would impose a burden on competition.

(C) Clearing Agency's Statement on Comments on the Proposed Rule Change Received From Members, Participants, or Others

While the matters discussed in this proposed rule change have been subject to extensive discussion with clearing members, including during an OCC Operations Roundtable, written comments were not and are not intended to be solicited with respect to the proposed rule change, and none have been received.

III. Date of Effectiveness of the Proposed Rule Change and Timing for Commission Action

Within 45 days of the date of publication of this notice in the **Federal Register** or within such longer period up to 90 days (i) as the Commission may designate if it finds such longer period to be appropriate and publishes its reasons for so finding or (ii) as to which the self-regulatory organization consents, the Commission will:

(A) By order approve or disapprove such proposed rule change, or

(B) institute proceedings to determine whether the proposed rule change should be disapproved.

The proposal shall not take effect until all regulatory actions required with respect to the proposal are completed.[17]

IV. Solicitation of Comments

Interested persons are invited to submit written data, views and arguments concerning the foregoing, including whether the proposed rule change is consistent with the Exchange Act. Comments may be submitted by any of the following methods:

Electronic Comments

- Use the Commission's Internet comment form (*http://www.sec.gov/rules/sro.shtml*); or
- Send an email to *rule-comments@sec.gov.* Please include File Number SR–OCC–2013–04 on the subject line.

Paper Comments

- Send paper comments in triplicate to Elizabeth M. Murphy, Secretary, Securities and Exchange Commission, 100 F Street NE., Washington, DC 20549.

All submissions should refer to File Number SR–OCC–2013–04. This file number should be included on the subject line if email is used. To help the Commission process and review your comments more efficiently, please use only one method. The Commission will post all comments on the Commission's Internet Web site (*http://www.sec.gov/rules/sro.shtml*). Copies of the submission, all subsequent amendments, all written statements with respect to the proposed rule change that are filed with the Commission, and all written communications relating to the proposed rule change between the Commission and any person, other than those that may be withheld from the public in accordance with the provisions of 5 U.S.C. 552, will be available for Web site viewing and printing in the Commission's Public Reference Room, 100 F Street NE., Washington, DC 20549 on official business days between the hours of 10:00 a.m. and 3:00 p.m. Copies of the filing also will be available for inspection and copying at the principal office of OCC and on OCC's Web site: (*http://www.optionsclearing.com/components/docs/legal/rules_and_bylaws/sr_occ_13_04.pdf*). All comments received will be posted without change; the Commission does not edit personal identifying information from submissions. You should submit only information that you wish to make available publicly. All submissions should refer to File Number SR–OCC–2013–04 and should be submitted on or before May 28, 2013.

For the Commission, by the Division of Trading and Markets, pursuant to delegated authority.[18]

Kevin M. O'Neill,

Deputy Secretary.

[FR Doc. 2013–10605 Filed 5–3–13; 8:45 am]

BILLING CODE 8011–01–P

[17] OCC also filed the proposed rule change as an advance notice under Section 806(e)(1) of the Clearing Supervision Act. 12 U.S.C. 5465(e)(1); SR–OCC–2013–802. Proposed changes filed under the Clearing Supervision Act may be implemented pursuant to Section 806(e)(1)(G) of the Clearing Supervision Act if the Commission does not object to the proposed change within 60 days of the later of (i) the date that the proposed change was filed with the Commission or (ii) the date that any additional information requested by the Commission is received. 12 U.S.C. 5465(e)(1)(G).

[18] 17 CFR 200.30–3(a)(12).

DEPARTMENT OF TRANSPORTATION

Federal Highway Administration

Environmental Impact Statement: City of Buffalo, Erie County, New York

AGENCY: Federal Highway Administration (FHWA), DOT.

ACTION: Notice of Intent.

SUMMARY: The FHWA is issuing this notice to advise the public that an environmental impact statement will be prepared for a proposed highway project in the City of Buffalo, Erie County, New York.

FOR FURTHER INFORMATION CONTACT: Jonathan D. McDade, Division Administrator, Federal Highway Administration, New York Division, Leo O'Brien Federal Building, 11A Clinton Avenue, Suite 719, Albany New York 12207, Telephone: (518) 431–4127.

Or

Darrell F. Kaminski, Regional Director, NYSDOT Region 5; 100 Seneca Street, Buffalo, NY 14203, Telephone (716) 847–3238.

SUPPLEMENTARY INFORMATION: The FHWA, in cooperation with the New York State Department of Transportation, will prepare an Environmental Impact Statement (EIS) in accordance with the National Environmental Policy Act (NEPA) on a proposal to provide improved access to and from the US Border Port of Entry/Peace Bridge Plaza (Plaza), in the City of Buffalo, Erie County, New York. The primary need of the project is to address the limited direct access between the Plaza and Interstate 190. Existing direct access is limited and requires regional and international traffic to use the local street system. This limited access adds additional commercial traffic to the local streets which were originally designed to only meet the needs of local traffic. The purpose of the Project is to reduce the use of the local streets by interstate traffic and provide access to the existing Plaza at its current location. The primary objectives of the project are to address the need for direct access from the Plaza to the northbound lanes of Interstate 190, to redirect through traffic from Front Park, and to remove Baird Drive. Alternatives under consideration include: (1) The no-build alternative; and (2) an alternative to construct a new ramp from the Plaza to the northbound lanes of Interstate 190, to remove Baird Drive, and to provide alternate access from Porter Avenue to the Plaza.

Letters describing the proposed action and soliciting comments will be sent to the appropriate Cooperating and

Participating Agencies and to private organizations and citizens that have expressed an interest in this action. Public and agency outreach will consist of: (1) A formal public Scoping meeting to be held Buffalo NY in June 2013, (2) a public hearing, (3) meetings with the applicable Cooperating and Participating Agencies, (4) a meeting with the Section 106 Consulting Parties including federally recognized Indian tribes. Public notice will be given of the date, time and place of the meetings and hearing. The draft EIS will be available for public and agency review and comment prior to the public hearing.

To ensure that a full range of issues related to this proposed action are addressed and all significant issues are identified, comments and suggestions are invited from all interested parties. Comments or questions concerning this proposed action and the EIS should be directed to the FHWA or NYSDOT at the addresses provided above.

(Catalog of Federal Domestic Assistance Program Number 20.205, Highway Research, Planning and Construction. The regulations implementing Executive Order 12372 regarding intergovernmental consultation on Federal programs and activities apply to this program.)

Issued on: April 30, 2013.

Jonathan D. McDade,

Division Administrator, New York Division, Federal Highway Administration, Albany, NY.

[FR Doc. 2013–10660 Filed 5–3–13; 8:45 am]

BILLING CODE 4910–22–P

DEPARTMENT OF TRANSPORTATION

Federal Highway Administration

Notice of Final Federal Agency Actions on Transportation Project in Washington State

AGENCY: Federal Highway Administration (FHWA), U.S. DOT.

ACTION: Notice of Limitation on Claims for Judicial Review of Actions by FHWA and Other Federal Agencies.

SUMMARY: This notice announces actions taken by the FHWA and other Federal agencies that are final within the meaning of 23 U.S.C. 139(l)(1). The actions relate to the Interstate 90 (I–90) Snoqualmie Pass East Project, located between Hyak and Easton (Milepost [MP] 55.1 to 70.3) in Kittitas County, Washington. The action by FHWA is the Record of Decision (ROD), which selects avalanche bridges for construction on I–90 between MP 57.9 and 58.4. Actions by other Federal agencies include issuing amendments to previously issued permits.

DATES: By this notice, FHWA is advising the public of final agency actions subject to 23 U.S.C. 139(l)(1). A claim seeking judicial review of the Federal agency actions on the listed highway project will be barred unless the claim is filed on or before October 3, 2013. If the Federal law that authorizes judicial review of a claim provides a time period of less than 150 days for filing such claim, then that shorter time period still applies.

FOR FURTHER INFORMATION CONTACT: Liana Liu, Area Engineer, North Central and South Central Region, Federal Highway Administration, 711 South Capital Way, Suite 501, Olympia, WA 98501–0943, telephone: (360) 753–9553, email address: *Liana.Liu@dot.gov;* or Jason Smith, Environmental Manager, South Central Region, Washington State Department of Transportation, 2809 Rudkin Road, Union Gap, WA 98903, telephone: (509) 577–1750, email address: *SmithJW@wsdot.wa.gov.*

SUPPLEMENTARY INFORMATION: Notice is hereby given that the FHWA and other Federal agencies have taken final agency actions related to the I–90 Snoqualmie Pass East Project in the State of Washington. FHWA, in cooperation with the Washington State Department of Transportation (WSDOT), prepared a Draft Environmental Impact Statement (EIS) (FHWA–WA–EIS–05–01–D) and Final EIS (FHWA–WA–EIS–05–01–F) for proposed improvements to a 15-mile portion of I–90 immediately east of Snoqualmie Pass in the Cascade Mountains, from Hyak at MP 55.1 to Easton Hill at MP 70.3. FHWA issued a ROD for the project in October 2008 and construction has continued since 2009. In September 2011, the contractor selected to construct the portion of the project from MP 57.34 to 60.23 along Keechelus Lake proposed a design modification that meets the project's purpose and need while reducing construction and maintenance costs. FHWA and WSDOT prepared a Draft Supplemental EIS (FHWA–WA–EIS–05–01–DS) to evaluate the design modification, which includes construction of eastbound and westbound avalanche bridges instead of the new, expanded snowshed that was originally part of the I–90 project Selected Alternative.

The actions by the Federal agencies, and the laws under which such actions were taken, are described in the Final Supplemental EIS (FHWA–WA–EIS–05–01–FS) and ROD issued concurrently on March 12, 2013, and in other documents in the FHWA administrative record. These documents are available by contacting FHWA or WSDOT at the addresses provided above. The combined Final Supplemental EIS and ROD can also be downloaded electronically from the project Web site at *www.wsdot.wa.gov/projects/I90/SnoqualmiePassEast*, or viewed at area public libraries.

This notice applies to all Federal agency decisions on the project as of the issuance date of this notice and all laws under which such actions were taken, including but not limited to:

General: National Environmental Policy Act [42 U.S.C. 4321–4351]; Federal-Aid Highway Act [23 U.S.C. 109].

Wildlife: Endangered Species Act [16 U.S.C. 1531–1544]; Migratory Bird Treaty Act [16 U.S.C. 703–712].

(Catalog of Federal Domestic Assistance Program No. 20.205, Highway Research, Planning and Construction. The regulations implementing Executive Order 12372 regarding intergovernmental consultation on Federal programs and activities apply to this program.)

Authority: 23 U.S.C. 139(l)(1), as amended by Moving Ahead for Progress in the 21st Century Act (MAP–21), Pub. L. 112–141, § 1308, 126 Stat. 405 (2012).

Issued on: April 29, 2013.

Daniel M. Mathis,

Division Administrator, Olympia, WA.

[FR Doc. 2013–10661 Filed 5–3–13; 8:45 am]

BILLING CODE 4910–RY–P

DEPARTMENT OF TRANSPORTATION

Federal Motor Carrier Safety Administration

[Docket No. FMCSA–2013–0122]

Qualification of Drivers; Application for Exemptions; Hearing

AGENCY: Federal Motor Carrier Safety Administration (FMCSA), DOT.

ACTION: Notice of applications for exemptions; request for comments.

SUMMARY: FMCSA announces that 16 individuals have applied for a medical exemption from the hearing requirement in the Federal Motor Carrier Safety Regulations (FMCSRs). In accordance with the statutory requirements concerning applications for exemptions, FMCSA requests public comments on these requests. The statute and implementing regulations concerning exemptions require that exemptions must provide an equivalent or greater level of safety than if they were not granted. If the Agency determines the exemptions would satisfy the statutory requirements and decides to grant theses requests after reviewing the public comments submitted in response

to this notice, the exemptions would enable 16 individuals to operate CMVs in interstate commerce.

DATES: Comments must be received on or before June 5, 2013.

ADDRESSES: You may submit comments bearing the Federal Docket Management System (FDMS) Docket No. FMCSA–2013–0122] using any of the following methods:

- *Federal eRulemaking Portal:* Go to *http://www.regulations.gov.* Follow the on-line instructions for submitting comments.
- *Mail:* Docket Management Facility; U.S. Department of Transportation, 1200 New Jersey Avenue SE., West Building Ground Floor, Room W12–140, Washington, DC 20590–0001.
- *Hand Delivery:* West Building Ground Floor, Room W12–140, 1200 New Jersey Avenue SE., Washington, DC, between 9 a.m. and 5 p.m., ET, Monday through Friday, except Federal Holidays.
- *Fax:* 1–202–493–2251.

Instructions: Each submission must include the Agency name and the docket numbers for this notice. Note that all comments received will be posted without change to *http://www.regulations.gov*, including any personal information provided. Please see the Privacy Act heading below for further information.

Docket: For access to the docket to read background documents or comments, go to *http://www.regulations.gov* at any time or Room W12–140 on the ground level of the West Building, 1200 New Jersey Avenue SE., Washington, DC, between 9 a.m. and 5 p.m., ET, Monday through Friday, except Federal holidays. The FDMS is available 24 hours each day, 365 days each year. If you want acknowledgment that we received your comments, please include a self-addressed, stamped envelope or postcard or print the acknowledgement page that appears after submitting comments on-line.

Privacy Act: Anyone may search the electronic form of all comments received into any of our dockets by the name of the individual submitting the comment (or of the person signing the comment, if submitted on behalf of an association, business, labor union, etc.). You may review DOT's Privacy Act Statement for the FDMS published in the **Federal Register** on January 17, 2008 (73 FR 3316), or you may visit *http://edocket.access.gpo.gov/2008/pdf/E8–785.pdf.*

FOR FURTHER INFORMATION CONTACT: Elaine M. Papp, Chief Medical Programs, (202) 366–4001, *fmcsamedical@dot.gov,* FMCSA, Department of Transportation, 1200 New Jersey Avenue SE., Room W64–224, Washington, DC 20590–0001. Office hours are from 8:30 a.m. to 5 p.m., Monday through Friday, except Federal holidays.

SUPPLEMENTARY INFORMATION:

Background

The Federal Motor Carrier Safety Administration has authority to grant exemptions from many of the Federal Motor Carrier Safety Regulations (FMCSRs) under 49 U.S.C. 31315 and 31136(e), as amended by Section 4007 of the Transportation Equity Act for the 21st Century (TEA- 21) (Pub. L. 105–178, June 9, 1998, 112 Stat. 107, 401). FMCSA has published in 49 CFR part 381, subpart C final rules implementing the statutory changes in its exemption procedures made by section 4007, 69 FR 51589 (August 20, 2004).[1] Under the rules in part 381, subpart C, FMCSA must publish a notice of each exemption request in the **Federal Register**. The Agency must provide the public with an opportunity to inspect the information relevant to the application, including any safety analyses that have been conducted and any research reports, technical papers and other publications referenced in the application. The Agency must also provide an opportunity to submit public comment on the applications for exemption.

The Agency reviews the safety analyses and the public comments and determines whether granting the exemption would likely achieve a level of safety equivalent to or greater than the level that would be achieved without the exemption. The decision of the Agency must be published in the **Federal Register**. If the Agency denies the request, it must state the reason for doing so. If the decision is to grant the exemption, the notice must specify the person or class of persons receiving the exemption and the regulatory provision or provisions from which an exemption is granted. The notice must also specify the effective period of the exemption (up to 2 years) and explain the terms and conditions of the exemption. The exemption may be renewed.

The current provisions of the FMCSRs concerning hearing state that a person is physically qualified to drive a CMV if that person

First perceives a forced whispered voice in the better ear at not less than 5 feet with or without the use of a hearing aid or, if tested by use of an audiometric device, does not have an average hearing loss in the better ear greater than 40 decibels at 500 Hz, 1,000 Hz, and 2,000 Hz with or without a hearing aid when the audiometric device is calibrated to American National Standard (formerly ASA Standard) Z24.5—1951.

49 CFR 391.41(b)(11). This standard was adopted in 1970, with a revision in 1971 to allow drivers to be qualified under this standard while wearing a hearing aid, 35 FR 6458, 6463 (April 22, 1970) and 36 FR 12857 (July 3, 1971).

FMCSA also issues instructions for completing the medical examination report and includes advisory criteria on the report itself to provide guidance for medical examiners in applying the hearing standard. See 49 CFR 391.43(f). The current advisory criteria for the hearing standard include a reference to a report entitled ''Hearing Disorders and Commercial Motor Vehicle Drivers'' prepared for the Federal Highway Administration, FMCSA's predecessor, in 1993.[2]

FMCSA Requests Comments on the Exemption Applications

FMCSA requests comments from all interested parties on whether a driver who cannot meet the hearing standard should be permitted to operate a CMV in interstate commerce. Further, the Agency asks for comments on whether a driver who cannot meet the hearing standard should be limited to operating only certain types of vehicles in interstate commerce, for example, vehicles without air brakes. The statute and implementing regulations concerning exemptions require that the Agency request public comments on all applications for exemptions. The Agency is also required to make a determination that an exemption would likely achieve a level of safety that is equivalent to, or greater than, the level that would be achieved absent such exemption before granting any such requests. 49 U.S.C.

Information on Individual Applicants

Andrew Alcozer

Mr. Alcozer holds a driver's license from Illinois. He would like to drive a CMV in interstate commerce, if he is granted an exemption.

Shayne Bumbalough

Mr. Bumbalough holds a driver's license from Washington. He would like to drive a CMV in interstate commerce, if he is granted an exemption.

[1] This action adopted as final rules the interim final rules issued by FMCSA's predecessor in 1998 (63 FR 67600 (Dec. 8, 2008)), and adopted by FMCSA in 2001 (66 FR 49867 (Oct. 1, 2001)).

[2] This report is available on the FMCSA Web site at *http://www.fmcsa.dot.gov/facts-research/research-technology/publications/medreport_archives.htm.*

Barry Carpenter

Mr. Carpenter holds a driver's license from South Dakota. He would like to drive a CMV in interstate commerce, if he is granted an exemption.

Charles Cofield

Mr. Cofield holds a driver's license from Mississippi. He would like to drive an 18-wheeler in interstate commerce, if he is granted an exemption.

Chase Cook

Mr. Cook holds a driver's license from Virginia. He would like to drive a CMV in interstate commerce, if he is granted an exemption.

Jerry Ferguson

Mr. Ferguson holds a class A Commercial driver's license (CDL) from Texas. He would like to drive a CMV in interstate commerce, if he is granted an exemption.

Michael Fuller

Mr. Fuller holds a driver's license from North Carolina. He would like to drive a semi-truck in interstate commerce, if he is granted an exemption.

Anthony Gray

Mr. Gray holds a class A Commercial driver's license (CDL) from Kentucky. He would like to drive a CMV in interstate commerce, if he is granted an exemption.

Kyle Hornung

Mr. Hornung holds a driver's license from Wisconsin. He would like to drive a CMV in interstate commerce, if he is granted an exemption.

Valerie Johnson

Ms. Johnson holds a class B Commercial driver's license (CDL) from California. She would like to drive a CMV in interstate commerce, if she is granted an exemption.

Bryan Macfarlane

Mr. Macfarlane holds a driver's license from Vermont. He would like to drive a semi-truck in interstate commerce, if he is granted an exemption.

Robert Munson

Mr. Munson holds a driver's license from New Jersey. He would like to drive a CMV with air brakes in interstate commerce, if he is granted an exemption.

Edwin Oakes, II

Mr. Oakes holds a driver's license from New York. He would like to drive a CMV in interstate commerce, if he is granted an exemption.

Thomas Prickett

Mr. Prickett holds a driver's license from Minnesota. He would like to drive a CMV in interstate commerce, if he is granted an exemption.

James Schubin

Mr. Schubin holds a class A Commercial driver's license (CDL) from California. He would like to drive a CMV in interstate commerce, if he is granted an exemption.

Russell L. Smith

Mr. Smith holds a driver's license from Ohio. He would like to drive a CMV in interstate commerce, if he is granted an exemption.

Request for Comments

In accordance with 49 U.S.C. 31136(e) and 31315(b)(4), FMCSA requests public comment from all interested persons on the exemption petitions described in this notice. The Agency will consider all comments received before the close of business June 5, 2013. Comments will be available for examination in the docket at the location listed under the **ADDRESSES** section of this notice. The Agency will file comments received after the comment closing date in the public docket, and will consider them to the extent practicable. In addition to late comments, FMCSA will also continue to file, in the public docket, relevant information that becomes available after the comment closing date. Interested persons should monitor the public docket for new material.

Issued on: April 29, 2013.

Larry W. Minor,

Associate Administrator for Policy.

[FR Doc. 2013–10668 Filed 5–3–13; 8:45 am]

BILLING CODE 4910–EX–P

DEPARTMENT OF TRANSPORTATION

Federal Motor Carrier Safety Administration

[Docket No. FMCSA–2013–0018]

Qualification of Drivers; Exemption Applications; Diabetes Mellitus

AGENCY: Federal Motor Carrier Safety Administration (FMCSA).

ACTION: Notice of applications for exemption from the diabetes mellitus requirement; request for comments.

SUMMARY: FMCSA announces receipt of applications from 16 individuals for exemption from the prohibition against persons with insulin-treated diabetes mellitus (ITDM) operating commercial motor vehicles (CMVs) in interstate commerce. If granted, the exemptions would enable these individuals with ITDM to operate CMVs in interstate commerce.

DATES: Comments must be received on or before June 5, 2013.

ADDRESSES: You may submit comments bearing the Federal Docket Management System (FDMS) Docket No. FMCSA–2013–0018 using any of the following methods:

- *Federal eRulemaking Portal:* Go to *http://www.regulations.gov*. Follow the on-line instructions for submitting comments.

Mail: Docket Management Facility; U.S. Department of Transportation, 1200 New Jersey Avenue SE., West Building Ground Floor, Room W12–140, Washington, DC 20590–0001.

- *Hand Delivery:* West Building Ground Floor, Room W12–140, 1200 New Jersey Avenue SE., Washington, DC, between 9 a.m. and 5 p.m., Monday through Friday, except Federal Holidays.
- *Fax:* 1–202–493–2251.

Instructions: Each submission must include the Agency name and the docket numbers for this notice. Note that all comments received will be posted without change to *http://www.regulations.gov,* including any personal information provided. Please see the Privacy Act heading below for further information.

Docket: For access to the docket to read background documents or comments, go to *http://www.regulations.gov* at any time or Room W12–140 on the ground level of the West Building, 1200 New Jersey Avenue SE., Washington, DC, between 9 a.m. and 5 p.m., Monday through Friday, except Federal holidays. The Federal Docket Management System (FDMS) is available 24 hours each day, 365 days each year. If you want acknowledgment that we received your comments, please include a self-addressed, stamped envelope or postcard or print the acknowledgement page that appears after submitting comments on-line.

Privacy Act: Anyone may search the electronic form of all comments received into any of our dockets by the name of the individual submitting the comment (or of the person signing the comment, if submitted on behalf of an association, business, labor union, etc.). You may review DOT's Privacy Act Statement for the Federal Docket Management System (FDMS) published in the **Federal Register** on January 17, 2008 (73 FR 3316).

FOR FURTHER INFORMATION CONTACT: Elaine M. Papp, Chief, Medical Programs Division, (202) 366–4001, *fmcsamedical@dot.gov,* FMCSA, Department of Transportation, 1200 New Jersey Avenue SE., Room W64–224, Washington, DC 20590–0001. Office hours are from 8:30 a.m. to 5 p.m., Monday through Friday, except Federal holidays.

SUPPLEMENTARY INFORMATION:

Background

Under 49 U.S.C. 31136(e) and 31315, FMCSA may grant an exemption from the Federal Motor Carrier Safety Regulations for a 2-year period if it finds ''such exemption would likely achieve a level of safety that is equivalent to or greater than the level that would be achieved absent such exemption.'' The statute also allows the Agency to renew exemptions at the end of the 2-year period. The 16 individuals listed in this notice have recently requested such an exemption from the diabetes prohibition in 49 CFR 391.41(b) (3), which applies to drivers of CMVs in interstate commerce. Accordingly, the Agency will evaluate the qualifications of each applicant to determine whether granting the exemption will achieve the required level of safety mandated by the statutes.

Qualifications of Applicants

Luis A. Alvarez

Mr. Alvarez, 57, has had ITDM since 2010. His endocrinologist examined him in 2012 and certified that he has had no severe hypoglycemic reactions resulting in loss of consciousness, requiring the assistance of another person, or resulting in impaired cognitive function that occurred without warning in the past 12 months and no recurrent (2 or more) severe hypoglycemic episodes in the last 5 years. His endocrinologist certifies that Mr. Alvarez understands diabetes management and monitoring, has stable control of his diabetes using insulin, and is able to drive a CMV safely. Mr. Alvarez meets the vision requirements of 49 CFR 391.41(b)(10). His ophthalmologist examined him in 2012 and certified that he does not have diabetic retinopathy. He holds a Class C operator's license from Maryland.

Jessie W. Burnett

Mr. Burnett, 62, has had ITDM since 2010. His endocrinologist examined him in 2013 and certified that he has had no severe hypoglycemic reactions resulting in loss of consciousness, requiring the assistance of another person, or resulting in impaired cognitive function that occurred without warning in the past 12 months and no recurrent (2 or more) severe hypoglycemic episodes in the last 5 years. His endocrinologist certifies that Mr. Burnett understands diabetes management and monitoring, has stable control of his diabetes using insulin, and is able to drive a CMV safely. Mr. Burnett meets the vision requirements of 49 CFR 391.41(b)(10). His optometrist examined him in 2013 and certified that he does not have diabetic retinopathy. He holds a Class A CDL from Kansas.

Bradley W. Clark

Mr. Clark, 60, has had ITDM since 2012. His endocrinologist examined him in 2012 and certified that he has had no severe hypoglycemic reactions resulting in loss of consciousness, requiring the assistance of another person, or resulting in impaired cognitive function that occurred without warning in the past 12 months and no recurrent (2 or more) severe hypoglycemic episodes in the last 5 years. His endocrinologist certifies that Mr. Clark understands diabetes management and monitoring, has stable control of his diabetes using insulin, and is able to drive a CMV safely. Mr. Clark meets the requirements of the vision standard at 49 CFR 391.41(b)(10). His optometrist examined him in 2012 and certified that he does not have diabetic retinopathy. He holds a Class A CDL from Utah.

Rickey B. Cohen

Mr. Cohen, 60, has had ITDM since 2012. His endocrinologist examined him in 2012 and certified that he has had no severe hypoglycemic reactions resulting in loss of consciousness, requiring the assistance of another person, or resulting in impaired cognitive function that occurred without warning in the past 12 months and no recurrent (2 or more) severe hypoglycemic episodes in the last 5 years. His endocrinologist certifies that Mr. Cohen understands diabetes management and monitoring, has stable control of his diabetes using insulin, and is able to drive a CMV safely. Mr. Cohen meets the requirements of the vision standard at 49 CFR 391.41(b)(10). His optometrist examined him in 2012 and certified that he does not have diabetic retinopathy. He holds a Class C CDL from Maryland.

Ernest R. Copeland

Mr. Copeland, 77, has had ITDM since 2012. His endocrinologist examined him in 2012 and certified that he has had no severe hypoglycemic reactions resulting in loss of consciousness, requiring the assistance of another person, or resulting in impaired cognitive function that occurred without warning in the past 12 months and no recurrent (2 or more) severe hypoglycemic episodes in the last 5 years. His endocrinologist certifies that Mr. Copeland understands diabetes management and monitoring, has stable control of his diabetes using insulin, and is able to drive a CMV safely. Mr. Copeland meets the requirements of the vision standard at 49 CFR 391.41(b)(10). His optometrist examined him in 2012 and certified that he does not have diabetic retinopathy. He holds a Class B CDL from Pennsylvania.

Ricki A. Dean

Mr. Dean, 54, has had ITDM since 2013. His endocrinologist examined him in 2013 and certified that he has had no severe hypoglycemic reactions resulting in loss of consciousness, requiring the assistance of another person, or resulting in impaired cognitive function that occurred without warning in the past 12 months and no recurrent (2 or more) severe hypoglycemic episodes in the last 5 years. His endocrinologist certifies that Mr. Dean understands diabetes management and monitoring, has stable control of his diabetes using insulin, and is able to drive a CMV safely.

Mr. Dean meets the vision requirements of 49 CFR 391.41(b)(10). His optometrist examined him in 2013 and certified that he does not have diabetic retinopathy. He holds a Class A CDL from Florida.

Jerry L. Grimit

Mr. Grimit, 47, has had ITDM since prior to 2010. His endocrinologist examined him in 2013 and certified that he has had no severe hypoglycemic reactions resulting in loss of consciousness, requiring the assistance of another person, or resulting in impaired cognitive function that occurred without warning in the past 12 months and no recurrent (2 or more) severe hypoglycemic episodes in the last 5 years. His endocrinologist certifies that Mr. Grimit understands diabetes management and monitoring, has stable control of his diabetes using insulin, and is able to drive a CMV safely. Mr. Grimit meets the requirements of the vision standard at 49 CFR 391.41(b)(10). His optometrist examined him in 2013 and certified that he does not have diabetic retinopathy. He holds a Class A CDL from Iowa.

Bruce K. Harris

Mr. Harris, 45, has had ITDM since 1996. His endocrinologist examined him in 2012 and certified that he has had no severe hypoglycemic reactions resulting in loss of consciousness, requiring the assistance of another person, or

resulting in impaired cognitive function that occurred without warning in the past 12 months and no recurrent (2 or more) severe hypoglycemic episodes in the last 5 years. His endocrinologist certifies that Mr. Harris understands diabetes management and monitoring, has stable control of his diabetes using insulin, and is able to drive a CMV safely. Mr. Harris meets the requirements of the vision standard at 49 CFR 391.41(b)(10). His optometrist examined him in 2013 and certified that he does not have diabetic retinopathy. He holds a Class C operator's license from Texas.

Marsha K. Kanable

Ms. Kanable, 44, has had ITDM since 1985. Her endocrinologist examined her in 2013 and certified that she has had no severe hypoglycemic reactions resulting in loss of consciousness, requiring the assistance of another person, or resulting in impaired cognitive function that occurred without warning in the past 12 months and no recurrent (2 or more) severe hypoglycemic episodes in the last 5 years. Her endocrinologist certifies that Ms. Kanable understands diabetes management and monitoring has stable control of her diabetes using insulin, and is able to drive a CMV safely. Ms. Kanable meets the requirements of the vision standard at 49 CFR 391.41(b)(10). Her optometrist examined her in 2013 and certified that she does not have diabetic retinopathy. She holds an operator's license from Indiana.

Richard J. Kirchner

Mr. Kirchner, 59, has had ITDM since 2004. His endocrinologist examined him in 2012 and certified that he has had no severe hypoglycemic reactions resulting in loss of consciousness, requiring the assistance of another person, or resulting in impaired cognitive function that occurred without warning in the past 12 months and no recurrent (2 or more) severe hypoglycemic episodes in the last 5 years. His endocrinologist certifies that Mr. Kirchner understands diabetes management and monitoring, has stable control of his diabetes using insulin, and is able to drive a CMV safely.

Mr. Kirchner meets the vision requirements of 49 CFR 391.41(b)(10). His ophthalmologist examined him in 2012 and certified that he does not have diabetic retinopathy. He holds a Class A CDL from Minnesota.

Michael G. Lorelli

Mr. Lorelli, 21, has had ITDM since 2002. His endocrinologist examined him in 2012 and certified that he has had no severe hypoglycemic reactions resulting in loss of consciousness, requiring the assistance of another person, or resulting in impaired cognitive function that occurred without warning in the past 12 months and no recurrent (2 or more) severe hypoglycemic episodes in the last 5 years. His endocrinologist certifies that Mr. Lorelli understands diabetes management and monitoring, has stable control of his diabetes using insulin, and is able to drive a CMV safely. Mr. Lorelli meets the requirements of the vision standard at 49 CFR 391.41(b)(10). His ophthalmologist examined him in 2012 and certified that he does not have diabetic retinopathy. He holds a Class D operator's license from New York.

Richard B. Maurer

Mr. Maurer, 65, has had ITDM since 2012. His endocrinologist examined him in 2013 and certified that he has had no severe hypoglycemic reactions resulting in loss of consciousness, requiring the assistance of another person, or resulting in impaired cognitive function that occurred without warning in the past 12 months and no recurrent (2 or more) severe hypoglycemic episodes in the last 5 years. His endocrinologist certifies that Mr. Maurer understands diabetes management and monitoring, has stable control of his diabetes using insulin, and is able to drive a CMV safely. Mr. Maurer meets the requirements of the vision standard at 49 CFR 391.41(b)(10). His optometrist examined him in 2013 and certified that he does not have diabetic retinopathy. He holds a Class A CDL from Pennsylvania.

James M. McClarnon

Mr. McClarnon, 52, has had ITDM since 1987. His endocrinologist examined him in 2012 and certified that he has had no severe hypoglycemic reactions resulting in loss of consciousness, requiring the assistance of another person, or resulting in impaired cognitive function that occurred without warning in the past 12 months and no recurrent (2 or more) severe hypoglycemic episodes in the last 5 years. His endocrinologist certifies that Mr. McClarnon understands diabetes management and monitoring, has stable control of his diabetes using insulin, and is able to drive a CMV safely. Mr. McClarnon meets the vision requirements of 49 CFR 391.41(b)(10). His optometrist examined him in 2012 and certified that he does not have diabetic retinopathy. He holds a Class A CDL from Rhode Island.

Mario A. Ramirez, Jr.

Mr. Ramirez, 59, has had ITDM since 2007. His endocrinologist examined him in 2012 and certified that he has had no severe hypoglycemic reactions resulting in loss of consciousness, requiring the assistance of another person, or resulting in impaired cognitive function that occurred without warning in the past 12 months and no recurrent (2 or more) severe hypoglycemic episodes in the last 5 years. His endocrinologist certifies that Mr. Ramirez understands diabetes management and monitoring, has stable control of his diabetes using insulin, and is able to drive a CMV safely. Mr. Ramirez meets the requirements of the vision standard at 49 CFR 391.41(b)(10). His optometrist examined him in 2012 and certified that he does not have diabetic retinopathy. He holds a Class A CDL from California.

Daniel L. Smith

Mr. Smith, 43, has had ITDM since 2005. His endocrinologist examined him in 2013 and certified that he has had no severe hypoglycemic reactions resulting in loss of consciousness, requiring the assistance of another person, or resulting in impaired cognitive function that occurred without warning in the past 12 months and no recurrent (2 or more) severe hypoglycemic episodes in the last 5 years. His endocrinologist certifies that Mr. Smith understands diabetes management and monitoring, has stable control of his diabetes using insulin, and is able to drive a CMV safely. Mr. Smith meets the requirements of the vision standard at 49 CFR 391.41(b)(10). His ophthalmologist examined him in 2013 and certified that he has stable non-proliferative diabetic retinopathy. He holds a Class A CDL from Nebraska.

Kurt D. Witthoeft

Mr. Witthoeft, 50, has had ITDM since 2000. His endocrinologist examined him in 2012 and certified that he has had no severe hypoglycemic reactions resulting in loss of consciousness, requiring the assistance of another person, or resulting in impaired cognitive function that occurred without warning in the past 12 months and no recurrent (2 or more) severe hypoglycemic episodes in the last 5 years. His endocrinologist certifies that Mr. Witthoeft understands diabetes management and monitoring, has stable control of his diabetes using insulin, and is able to drive a CMV safely. Mr. Witthoeft meets the requirements of the vision standard at 49 CFR 391.41(b)(10). His ophthalmologist examined him in 2012 and certified that he does not have

diabetic retinopathy. He holds a Class A CDL from Minnesota.

Request for Comments

In accordance with 49 U.S.C. 31136(e) and 31315, FMCSA requests public comment from all interested persons on the exemption petitions described in this notice. We will consider all comments received before the close of business on the closing date indicated in the date section of the notice.

FMCSA notes that section 4129 of the Safe, Accountable, Flexible and Efficient Transportation Equity Act: A Legacy for Users requires the Secretary to revise its diabetes exemption program established on September 3, 2003 (68 FR 52441).[1] The revision must provide for individual assessment of drivers with diabetes mellitus, and be consistent with the criteria described in section 4018 of the Transportation Equity Act for the 21st Century (49 U.S.C. 31305).

Section 4129 requires: (1) Elimination of the requirement for 3 years of experience operating CMVs while being treated with insulin; and (2) establishment of a specified minimum period of insulin use to demonstrate stable control of diabetes before being allowed to operate a CMV.

In response to section 4129, FMCSA made immediate revisions to the diabetes exemption program established by the September 3, 2003 notice. FMCSA discontinued use of the 3-year driving experience and fulfilled the requirements of section 4129 while continuing to ensure that operation of CMVs by drivers with ITDM will achieve the requisite level of safety required of all exemptions granted under 49 U.S.C. 31136(e).

Section 4129(d) also directed FMCSA to ensure that drivers of CMVs with ITDM are not held to a higher standard than other drivers, with the exception of limited operating, monitoring and medical requirements that are deemed medically necessary.

The FMCSA concluded that all of the operating, monitoring and medical requirements set out in the September 3, 2003 notice, except as modified, were in compliance with section 4129(d). Therefore, all of the requirements set out in the September 3, 2003 notice, except as modified by the notice in the **Federal Register** on November 8, 2005 (70 FR 67777), remain in effect.

[1] Section 4129(a) refers to the 2003 notice as a ''final rule.'' However, the 2003 notice did not issue a ''final rule'' but did establish the procedures and standards for issuing exemptions for drivers with ITDM.

Issued on: April 25, 2013.

Larry W. Minor,

Associate Administrator of Policy.

[FR Doc. 2013–10683 Filed 5–3–13; 8:45 am]

BILLING CODE P

DEPARTMENT OF TRANSPORTATION

Federal Motor Carrier Safety Administration

[FMCSA Docket No. FMCSA–2013–0012]

Qualification of Drivers; Exemption Applications; Diabetes Mellitus

AGENCY: Federal Motor Carrier Safety Administration (FMCSA), DOT.

ACTION: Notice of final disposition.

SUMMARY: FMCSA announces its decision to exempt 20 individuals from its rule prohibiting persons with insulin-treated diabetes mellitus (ITDM) from operating commercial motor vehicles (CMVs) in interstate commerce. The exemptions will enable these individuals to operate CMVs in interstate commerce.

DATES: The exemptions are effective May 6, 2013. The exemptions expire on May 5, 2015.

FOR FURTHER INFORMATION CONTACT: Elaine M. Papp, Chief, Medical Programs Division, (202) 366–4001, *fmcsamedical@dot.gov,* FMCSA, Room W64–224, Department of Transportation, 1200 New Jersey Avenue SE., Washington, DC 20590–0001. Office hours are from 8:30 a.m. to 5 p.m., Monday through Friday, except Federal holidays.

SUPPLEMENTARY INFORMATION:

Electronic Access

You may see all the comments online through the Federal Document Management System (FDMS) at: *http://www.regulations.gov.*

Docket: For access to the docket to read background documents or comments, go to *http://www.regulations.gov* and/or Room W12–140 on the ground level of the West Building, 1200 New Jersey Avenue SE., Washington, DC, between 9 a.m. and 5 p.m., Monday through Friday, except Federal holidays.

Privacy Act: Anyone may search the electronic form of all comments received into any of DOT's dockets by the name of the individual submitting the comment (or of the person signing the comment, if submitted on behalf of an association, business, labor union, or other entity). You may review DOT's Privacy Act Statement for the Federal Docket Management System (FDMS) published in the **Federal Register** on January 17, 2008 (73 FR 3316).

Background

On March 18, 2013, FMCSA published a notice of receipt of Federal diabetes exemption applications from 20 individuals and requested comments from the public (78 FR 16758). The public comment period closed on April 17, 2013, and one comment was received.

FMCSA has evaluated the eligibility of the 20 applicants and determined that granting the exemptions to these individuals would achieve a level of safety equivalent to or greater than the level that would be achieved by complying with the current regulation 49 CFR 391.41(b)(3).

Diabetes Mellitus and Driving Experience of the Applicants

The Agency established the current requirement for diabetes in 1970 because several risk studies indicated that drivers with diabetes had a higher rate of crash involvement than the general population. The diabetes rule provides that ''A person is physically qualified to drive a commercial motor vehicle if that person has no established medical history or clinical diagnosis of diabetes mellitus currently requiring insulin for control'' (49 CFR 391.41(b)(3)).

FMCSA established its diabetes exemption program, based on the Agency's July 2000 study entitled ''A Report to Congress on the Feasibility of a Program to Qualify Individuals with Insulin-Treated Diabetes Mellitus to Operate in Interstate Commerce as Directed by the Transportation Act for the 21st Century.'' The report concluded that a safe and practicable protocol to allow some drivers with ITDM to operate CMVs is feasible. The September 3, 2003 (68 FR 52441), **Federal Register** notice in conjunction with the November 8, 2005 (70 FR 67777), **Federal Register** notice provides the current protocol for allowing such drivers to operate CMVs in interstate commerce.

These 20 applicants have had ITDM over a range of 1 to 22 years. These applicants report no severe hypoglycemic reactions resulting in loss of consciousness or seizure, requiring the assistance of another person, or resulting in impaired cognitive function that occurred without warning symptoms, in the past 12 months and no recurrent (2 or more) severe hypoglycemic episodes in the past 5 years. In each case, an endocrinologist verified that the driver has demonstrated a willingness to properly

monitor and manage his/her diabetes mellitus, received education related to diabetes management, and is on a stable insulin regimen. These drivers report no other disqualifying conditions, including diabetes-related complications. Each meets the vision requirement at 49 CFR 391.41(b)(10).

The qualifications and medical condition of each applicant were stated and discussed in detail in the March 18, 2013, **Federal Register** notice and they will not be repeated in this notice.

Discussion of Comments

FMCSA received one comment in this proceeding. The comment is considered and discussed below.

The Pennsylvania Department of Transportation is in favor of granting an exemption to Robert J. Weyant after reviewing his driving history.

Basis for Exemption Determination

Under 49 U.S.C. 31136(e) and 31315, FMCSA may grant an exemption from the diabetes requirement in 49 CFR 391.41(b)(3) if the exemption is likely to achieve an equivalent or greater level of safety than would be achieved without the exemption. The exemption allows the applicants to operate CMVs in interstate commerce.

To evaluate the effect of these exemptions on safety, FMCSA considered medical reports about the applicants' ITDM and vision, and reviewed the treating endocrinologists' medical opinion related to the ability of the driver to safely operate a CMV while using insulin.

Consequently, FMCSA finds that in each case exempting these applicants from the diabetes requirement in 49 CFR 391.41(b)(3) is likely to achieve a level of safety equal to that existing without the exemption.

Conditions and Requirements

The terms and conditions of the exemption will be provided to the applicants in the exemption document and they include the following: (1) That each individual submit a quarterly monitoring checklist completed by the treating endocrinologist as well as an annual checklist with a comprehensive medical evaluation; (2) that each individual reports within 2 business days of occurrence, all episodes of severe hypoglycemia, significant complications, or inability to manage diabetes; also, any involvement in an accident or any other adverse event in a CMV or personal vehicle, whether or not it is related to an episode of hypoglycemia; (3) that each individual provide a copy of the ophthalmologist's or optometrist's report to the medical examiner at the time of the annual medical examination; and (4) that each individual provide a copy of the annual medical certification to the employer for retention in the driver's qualification file, or keep a copy in his/her driver's qualification file if he/she is self-employed. The driver must also have a copy of the certification when driving, for presentation to a duly authorized Federal, State, or local enforcement official.

Conclusion

Based upon its evaluation of the 20 exemption applications, FMCSA exempts Mick E. Brand (WA), Victor L. Daniels, Sr. (DE), Kenneth T. Faborito (HI), Colleen M. Herron (CA), Vincent K. Johnson (DC), Mark R. Kolling (MN), Kevin P. Lee (MN), Jason J. Libkie (CA), William R. Luckenbach (OK), Duane W. Mansur (NH), Fritz R. McBride (WI), Arthur H. Olsen (AZ), Jacob D. Parnaby (OH), Billy L. Suffel (OH), Samuel A. Tuzenew (NC), Ronnie L. West (MO), Robert J. Weyant (PA), Douglas G. Willson (OK), Brandon P. Wilson (NC), and Peter S. Zipperer (LA) from the ITDM requirement in 49 CFR 391.41(b)(3), subject to the conditions listed under ''Conditions and Requirements'' above.

In accordance with 49 U.S.C. 31136(e) and 31315 each exemption will be valid for two years unless revoked earlier by FMCSA. The exemption will be revoked if the following occurs: (1) The person fails to comply with the terms and conditions of the 1/exemption; (2) the exemption has resulted in a lower level of safety than was maintained before it was granted; or (3) continuation of the exemption would not be consistent with the goals and objectives of 49 U.S.C. 31136(e) and 31315. If the exemption is still effective at the end of the 2-year period, the person may apply to FMCSA for a renewal under procedures in effect at that time.

Issued on: April 25, 2013.

Larry W. Minor,

Associate Administrator for Policy.

[FR Doc. 2013–10667 Filed 5–3–13; 8:45 am]

BILLING CODE 4910–EX–P

DEPARTMENT OF TRANSPORTATION

Federal Railroad Administration

[Docket No. FRA–2000–7257: Notice No. 74]

Railroad Safety Advisory Committee; Notice of Meeting

AGENCY: Federal Railroad Administration (FRA), Department of Transportation (DOT).

ACTION: Announcement of Railroad Safety Advisory Committee (RSAC) Meeting.

SUMMARY: FRA announces the forty-eighth meeting of the RSAC, a Federal Advisory Committee that develops railroad safety regulations through a consensus process. The RSAC meeting topics will include opening remarks from the FRA Administrator. Status reports will be provided by the Fatigue Management, Rail Failure, and Risk Reduction Working Groups. Status reports will also be provided by the Engineering and System Safety Task Forces. This agenda is subject to change, including the possible addition of further proposed tasks under the Rail Safety Improvement Act of 2008.

DATES: The RSAC meeting is scheduled to commence at 9:30 a.m. on Friday, June 14, 2013, and will adjourn by 4:30 p.m.

ADDRESSES: The RSAC meeting will be held at the National Housing Center, located at 1201 15th Street NW., Washington, DC 20005. The meeting is open to the public on a first-come, first-served basis, and is accessible to individuals with disabilities. Sign and oral interpretation can be made available if requested 10 calendar days before the meeting.

FOR FURTHER INFORMATION CONTACT: Mr. Larry Woolverton, RSAC Administrative Officer/Coordinator, FRA, 1200 New Jersey Avenue SE., Mailstop 25, Washington, DC 20590, (202) 493–6212; or Mr. Robert Lauby, Deputy Associate Administrator for Regulatory and Legislative Operations, FRA, 1200 New Jersey Avenue SE., Mailstop 25, Washington, DC 20590, (202) 493–6474.

SUPPLEMENTARY INFORMATION: Pursuant to Section 10(a)(2) of the Federal Advisory Committee Act (Pub. L. 92–463), FRA is giving notice of a meeting of the RSAC. The RSAC was established to provide advice and recommendations to FRA on railroad safety matters. The RSAC is composed of 54 voting representatives from 32 member organizations, representing various rail industry perspectives. In addition, there are non-voting advisory representatives from the agencies with railroad safety regulatory responsibility in Canada and Mexico, the National Transportation Safety Board, and the Federal Transit Administration. The diversity of the Committee ensures the requisite range of views and expertise necessary to discharge its responsibilities. See the RSAC Web site for details on prior RSAC activities and pending tasks at: *http://rsac.fra.dot.gov/.* Please refer to the notice published in the **Federal**

Register on March 11, 1996 (61 FR 9740), for additional information about the RSAC.

Issued in Washington, DC.

Robert C. Lauby,

Deputy Associate Administrator for Regulatory and Legislative Operations.

[FR Doc. 2013–10684 Filed 5–3–13; 8:45 am]

BILLING CODE 4910–06–P

DEPARTMENT OF THE TREASURY

Office of the Comptroller of the Currency

[Docket ID: OCC–2013–0004]

Mutual Savings Association Advisory Committee

AGENCY: Office of the Comptroller of the Currency, Department of the Treasury.

ACTION: Notice of Federal Advisory Committee Meeting.

SUMMARY: The Office of the Comptroller of the Currency (OCC) announces a meeting of the Mutual Savings Association Advisory Committee (MSAAC).

DATES: A public meeting of the MSAAC will be held on June 17, 2013, beginning at 1:00 p.m. Eastern Daylight Time (EDT). Members of the public may submit written statements to the MSAAC. The OCC must receive written statements no later than Friday, June 7, 2013. Members of the public who plan to attend the meeting, and members of the public who require auxiliary aid, should contact the OCC by 5:00 p.m. EDT on Friday, June 14, 2013, to inform the OCC of their desire to attend the meeting and to provide the information that will be required to facilitate entry into the OCC building.

ADDRESSES: The June 17, 2013, meeting of the MSAAC will be held at 400 7th Street SW., Washington, DC 20219. Members of the public may submit written statements to *MSAAC@occ.treas.gov* or by mailing them in triplicate to Donna Deale, Designated Federal Official, Office of the Comptroller of the Currency, 400 7th Street SW., Washington, DC 20219. Members of the public who plan to attend the meeting should contact the OCC at *MSAAC@occ.treas.gov* or at 202–649–5420 to inform the OCC of their desire to attend the meeting and to provide the information that will be required to facilitate entry into the OCC building. Attendees should provide their full name, email address, and organization.

FOR FURTHER INFORMATION CONTACT: Donna Deale, Deputy Comptroller for Thrift Supervision, (202) 649–5420, Office of the Comptroller of the Currency, Washington, DC 20219.

SUPPLEMENTARY INFORMATION: By this notice, the OCC is announcing that the OCC MSAAC will convene a meeting on Monday, June 17, 2013, at the OCC's headquarters at 400 7th Street SW., Washington, DC 20219. The meeting is open to the public and will begin at 1:00 p.m. EDT. The agenda includes a discussion of current topics of interest to the industry. The purpose of the meeting is for the MSAAC to advise the OCC on the regulatory changes or other steps the OCC may be able to take to ensure the continued health and viability of mutual savings associations, and other issues of concern to the existing mutual savings associations. On the day of the meeting, attendees will be required to present proof of identification (a driver's license or other government issued photo identification) upon arrival at the OCC in order to gain entrance to the meeting.

Dated: April 29, 2013.

Thomas J. Curry,

Comptroller of the Currency.

[FR Doc. 2013–10569 Filed 5–3–13; 8:45 am]

BILLING CODE 4810–33–P

DEPARTMENT OF THE TREASURY

Office of Foreign Assets Control

Unblocking of One (1) Individual Specially Designated Global Terrorist Pursuant to Executive Order 13224

AGENCY: Office of Foreign Assets Control, Treasury.

ACTION: Notice.

SUMMARY: The Treasury Department's Office of Foreign Assets Control (''OFAC'') is removing the name of one (1) individual, whose property and interests in property have been blocked pursuant to Executive Order 13224 of September 23, 2001, Blocking Property and Prohibiting Transactions With Persons Who Commit, Threaten To Commit, or Support Terrorism, from the list of Specially Designated Nationals and Blocked Persons (''SDN List'').

DATES: The removal of this individual from the SDN List is effective as of April 30, 2013.

FOR FURTHER INFORMATION CONTACT: Assistant Director, Compliance Outreach & Implementation, Office of Foreign Assets Control, Department of the Treasury, Washington, DC 20220, tel.: 202/622–2490.

SUPPLEMENTARY INFORMATION:

Electronic and Facsimile Availability

The SDN List and additional information concerning OFAC are available from OFAC's Web site (*www.treasury.gov/ofac*). Certain general information pertaining to OFAC's sanctions programs also is available via facsimile through a 24-hour fax-on-demand service, tel.: 202/622–0077.

Background

On September 23, 2001, the President issued Executive Order 13224 (the ''Order'') pursuant to the International Emergency Economic Powers Act, 50 U.S.C. 1701–1706, and the United Nations Participation Act of 1945, 22 U.S.C. 287c, imposing economic sanctions on persons who commit, threaten to commit, or support acts of terrorism. The President identified in the Annex to the Order various individuals and entities as subject to the economic sanctions. The Order authorizes the Secretary of the Treasury, in consultation with the Secretary of State, the Attorney General, and (pursuant to Executive Order 13284) the Secretary of the Department of Homeland Security, to designate additional persons or entities determined to meet certain criteria set forth in Executive Order 13224.

The Department of the Treasury's Office of Foreign Assets Control has determined that this individual should be removed from the SDN List.

The following designation is removed from the SDN List:

Individual

1. KHOSHNEVIS, Hessam (a.k.a. KHOSH, Hussam; a.k.a. KHOSH–NEVIS, Hesaam; a.k.a. KHOSHNEVIS, Hesam; a.k.a. KHOSH–NEVIS, Hesam; a.k.a. KHOSHNEVIS, Hussam; a.k.a. KHOSHNVIS, Hassan; a.k.a. KHOUCHNOYESS, Hussam); nationality Iran; Passport A0023862 (Iran) (individual) [SDGT] [IFSR].

The removal of this individual name from the SDN List is effective as of April 30, 2013. All property and interests in property of the individual that are in or hereafter come within the United States or the possession or control of United States persons are now unblocked.

Dated: April 30, 2013.

Adam J. Szubin,

Director, Office of Foreign Assets Control.

[FR Doc. 2013–10658 Filed 5–3–13; 8:45 am]

BILLING CODE 4810–AL–P

DEPARTMENT OF THE TREASURY

Internal Revenue Service

Proposed Collection: Comment Request for Regulation Project

AGENCY: Internal Revenue Service (IRS), Treasury.

ACTION: Notice and request for comments.

SUMMARY: The Department of the Treasury, as part of its continuing effort to reduce paperwork and respondent burden, invites the general public and other Federal agencies to take this opportunity to comment on proposed and/or continuing information collections, as required by the Paperwork Reduction Act of 1995, Public Law 104–13 (44 U.S.C. 3506(c)(2)(A)). Currently, the IRS is soliciting comments concerning, Final Election of Reduced Research Credit.

DATES: Written comments should be received on or before July 5, 2013 to be assured of consideration.

ADDRESSES: Direct all written comments to Yvette B. Lawrence, Internal Revenue Service, Room 6129, 1111 Constitution Avenue NW., Washington, DC 20224.

FOR FURTHER INFORMATION CONTACT: Requests for additional information or copies of the regulations should be directed to Kerry Dennis, (202) 927–9368, or at Internal Revenue Service, Room 6129, 1111 Constitution Avenue NW., Washington DC 20224, or through the Internet, at *Kerry.Dennis@irs.gov.*

SUPPLEMENTARY INFORMATION:

Title: Final Election of Reduced Research Credit.

OMB Number: 1545–1155.

Regulation Project Number: TD 8282.

Abstract: This regulation relates to the manner of making an election under section 280C(3) of the Internal Revenue Code. Taxpayers making this election must reduce their section 41(a) research credit, but are not required to reduce their deductions for qualified research expenses, as required in paragraphs (1) and (2) of section 280C(c).

Current Actions: There is no change to this existing regulation.

Type of Review: Extension of a currently approved collection.

Affected Public: Individuals and business or other for-profit organizations.

Estimated Number of Respondents: 200.

Estimated Time per Respondent: 15 minutes.

Estimated Total Annual Burden Hours: 50.

The following paragraph applies to all of the collections of information covered by this notice:

An agency may not conduct or sponsor, and a person is not required to respond to, a collection of information unless the collection of information displays a valid OMB control number. Books or records relating to a collection of information must be retained as long as their contents may become material in the administration of any internal revenue law. Generally, tax returns and tax return information are confidential, as required by 26 U.S.C. 6103.

Request for Comments: Comments submitted in response to this notice will be summarized and/or included in the request for OMB approval. All comments will become a matter of public record. Comments are invited on: (a) Whether the collection of information is necessary for the proper performance of the functions of the agency, including whether the information shall have practical utility; (b) the accuracy of the agency's estimate of the burden of the collection of information; (c) ways to enhance the quality, utility, and clarity of the information to be collected; (d) ways to minimize the burden of the collection of information on respondents, including through the use of automated collection techniques or other forms of information technology; and (e) estimates of capital or start-up costs and costs of operation, maintenance, and purchase of services to provide information.

Approved: April 29, 2013.

Yvette B. Lawrence,

IRS Reports Clearance Officer.

[FR Doc. 2013–10578 Filed 5–3–13; 8:45 am]

BILLING CODE 4830–01–P

UNITED STATES SENTENCING COMMISSION

Sentencing Guidelines for United States Courts

AGENCY: United States Sentencing Commission.

ACTION: Notice of submission to Congress of amendments to the sentencing guidelines effective November 1, 2013.

SUMMARY: Pursuant to its authority under 28 U.S.C. 994(p), the Commission has promulgated amendments to the sentencing guidelines, policy statements, commentary, and statutory index. This notice sets forth the amendments and the reason for each amendment.

DATES: The Commission has specified an effective date of November 1, 2013, for the amendments set forth in this notice.

FOR FURTHER INFORMATION CONTACT: Jeanne Doherty, Public Affairs Officer, 202–502–4502. The amendments set forth in this notice also may be accessed through the Commission's Web site at *www.ussc.gov.*

SUPPLEMENTARY INFORMATION: The United States Sentencing Commission is an independent agency in the judicial branch of the United States Government. The Commission promulgates sentencing guidelines and policy statements for federal sentencing courts pursuant to 28 U.S.C. 994(a). The Commission also periodically reviews and revises previously promulgated guidelines pursuant to 28 U.S.C. 994(o) and generally submits guideline amendments to Congress pursuant to 28 U.S.C. 994(p) not later than the first day of May each year. Absent action of Congress to the contrary, submitted amendments become effective by operation of law on the date specified by the Commission (generally November 1 of the year in which the amendments are submitted to Congress).

Notice of proposed amendments was published in the **Federal Register** on January 18, 2013 (*see* 78 FR 4197). The Commission held a public hearing on the proposed amendments in Washington, DC, on March 13, 2013. On April 30, 2013, the Commission submitted these amendments to Congress and specified an effective date of November 1, 2013.

Authority: 28 U.S.C. 994(a), (o), and (p); USSC Rules of Practice and Procedure 4.1.

Patti B. Saris,

Chair.

1. *Amendment:* Section 2B1.1(b) is amended by striking paragraph (5); by renumbering paragraphs (6) through (8) as (5) through (7); by renumbering paragraphs (13) through (18) as (14) through (19); by inserting after paragraph (12) the following:

''(13) (Apply the greater) If the offense involved misappropriation of a trade secret and the defendant knew or intended—

(A) that the trade secret would be transported or transmitted out of the United States, increase by 2 levels; or

(B) that the offense would benefit a foreign government, foreign instrumentality, or foreign agent, increase by 4 levels.

If subparagraph (B) applies and the resulting offense level is less than level 14, increase to level 14.''; and in paragraph (16) (as so renumbered) by striking ''(b)(15)(B)'' and inserting ''(b)(16)(B)''.

The Commentary to § 2B1.1 captioned ''Application Notes'' is amended in

Note 6 by striking ''(b)(7)'' both places it appears and inserting ''(b)(6)''; in Note 10 by striking ''(b)(13)'' both places it appears and inserting ''(b)(14)''; in Note 11 by striking ''(b)(15)(A)'' both places it appears and inserting ''(b)(16)(A)''; in Note 12 by striking ''(b)(15)(B)'' and inserting ''(b)(16)(B)''; in Note 12(A) by striking ''(b)(15)(B)(i)'' and inserting ''(b)(16)(B)(i)''; in Note 12(B) by striking ''(b)(15)(B)(ii)'' and inserting ''(b)(16)(B)(ii)''; in Note 13 by striking ''(b)(17)'' both places it appears and inserting ''(b)(18)''; in Note 13(B) by striking ''(b)(17)(A)(iii)'' both places it appears and inserting ''(b)(18)(A)(iii)'', and by striking ''(b)(15)(B)'' both places it appears and inserting ''(b)(16)(B)''; in Note 14 by striking ''(b)(18)'' each place it appears and inserting ''(b)(19)''; and in Note 19(B) by striking ''(b)(17)(A)(iii)'' and inserting ''(b)(18)(A)(iii)''.

The Commentary to § 2B1.1 captioned ''Background'' is amended by striking ''(b)(6)'', ''(b)(8)'', ''(b)(14)(B)'', ''(b)(15)(A)'', ''(b)(15)(B)(i)'', ''(b)(16)'', ''(b)(17)'', and ''(b)(17)(B)'' and inserting ''(b)(5)'', ''(b)(7)'', ''(b)(15)(B)'', ''(b)(16)(A)'', ''(b)(16)(B)(i)'', ''(b)(17)'', ''(b)(18)'', and ''(b)(18)(B)'', respectively; and by inserting before the paragraph that begins ''Subsection (b)(15)(B)'' (as so amended) the following:

''Subsection (b)(13) implements the directive in section 3 of Public Law 112–269.''.

Reason for Amendment: This amendment responds to section 3 of the Foreign and Economic Espionage Penalty Enhancement Act of 2012, Public Law 112–269 (enacted January 14, 2013), which contains a directive to the Commission regarding offenses involving stolen trade secrets or economic espionage.

Section 3(a) of the Act directs the Commission to ''review and, if appropriate, amend'' the guidelines ''applicable to persons convicted of offenses relating to the transmission or attempted transmission of a stolen trade secret outside of the United States or economic espionage, in order to reflect the intent of Congress that penalties for such offenses under the Federal sentencing guidelines and policy statements appropriately reflect the seriousness of these offenses, account for the potential and actual harm caused by these offenses, and provide adequate deterrence against such offenses.'' Section 3(b) of the Act states that, in carrying out the directive, the Commission shall consider, among other things, whether the guidelines adequately address the simple misappropriation of a trade secret; the transmission or attempted transmission of a stolen trade secret outside of the United States; and the transmission or attempted transmission of a stolen trade secret outside of the United States that is committed or attempted to be committed for the benefit of a foreign government, foreign instrumentality, or foreign agent.

The offenses described in the directive may be prosecuted under 18 U.S.C. § 1831 (Economic espionage), which requires that the defendant specifically intend or know that the offense ''will benefit any foreign government, foreign instrumentality, or foreign agent,'' and 18 U.S.C. § 1832 (Theft of trade secrets), which does not require such specific intent or knowledge. The statutory maximum terms of imprisonment are 15 years for a section 1831 offense and 10 years for a section 1832 offense. Both offenses are referenced in Appendix A (Statutory Index) to § 2B1.1 (Theft, Property Destruction, and Fraud).

In response to the directive, the amendment revises the existing specific offense characteristic at § 2B1.1(b)(5), which provides an enhancement of two levels ''[i]f the offense involved misappropriation of a trade secret and the defendant knew or intended that the offense would benefit a foreign government, foreign instrumentality, or foreign agent,'' in two ways. First, it broadens the scope of the enhancement to provide a 2-level increase for trade secret offenses in which the defendant knew or intended that the trade secret would be transported or transmitted out of the United States. Second, it increases the severity of the enhancement to provide a 4-level enhancement and a minimum offense level of 14 for trade secret offenses in which the defendant knew or intended that the offense would benefit a foreign government, foreign instrumentality, or foreign agent. The enhancement also is redesignated as subsection (b)(13).

In responding to the directive, the Commission consulted with individuals or groups representing law enforcement, owners of trade secrets, victims of economic espionage offenses, the United States Department of Justice, the United States Department of Homeland Security, the United States Department of State, the Office of the United States Trade Representative, the Federal Public and Community Defenders, and standing advisory groups, among others. The Commission also considered relevant data and literature.

The Commission received public comment and testimony that the transmission of stolen trade secrets outside of the United States creates significant obstacles to effective investigation and prosecution and causes both increased harm to victims and more general harms to the nation. With respect to the victim, civil remedies may not be readily available or effective, and the transmission of a stolen trade secret outside of the United States substantially increases the risk that the trade secret will be exploited by a foreign competitor. In contrast, the simple movement of a stolen trade secret within a domestic multinational company (*e.g.,* from a United States office to an overseas office of the same company) may not pose the same risks or harms. More generally, the Commission heard that foreign actors increasingly target United States companies for trade secret theft and that such offenses pose a growing threat to the nation's global competitiveness, economic growth, and national security. Accordingly, the Commission determined that a 2-level enhancement is warranted for cases in which the defendant knew or intended that a stolen trade secret would be transported or transmitted outside of the United States.

The Commission also received public comment and testimony that cases involving economic espionage (*i.e.,* trade secret offenses that benefit foreign governments or entities under the substantial control of foreign governments) are particularly serious. In such cases, the United States is unlikely to obtain a foreign government's cooperation when seeking relief for the victim, and offenders backed by a foreign government likely will have significant financial resources to combat civil remedies. In addition, a foreign government's involvement increases the threat to the nation's economic and national security. Accordingly, the Commission determined that the existing enhancement for economic espionage should be increased from 2 to 4 levels and that such offenses should be subject to a minimum offense level of 14. This heightened enhancement is consistent with the higher statutory maximum penalties and fines applicable to such offenses and the Commission's established treatment of economic espionage as a more serious form of trade secret theft.

Consistent with the directive, the Commission also considered whether the guidelines appropriately account for the simple misappropriation of a trade secret. The Commission determined that such offenses are adequately accounted for by existing provisions in the *Guidelines Manual,* such as the loss table in § 2B1.1(b)(1), the sophisticated means enhancement at § 2B1.1(b)(10),

and the adjustment for abuse of position of trust or use of special skill at § 3B1.3.

2. *Amendment:* Section 2B1.1 is amended by inserting before paragraph (9) the following new paragraph:

''(8) (Apply the greater) If—

(A) the offense involved conduct described in 18 U.S.C. § 670, increase by 2 levels; or

(B) the offense involved conduct described in 18 U.S.C. § 670, and the defendant was employed by, or was an agent of, an organization in the supply chain for the pre-retail medical product, increase by 4 levels.'';

The Commentary to § 2B1.1 captioned ''Application Notes'' is amended in Note 1 by inserting after the paragraph that begins '' 'Personal information' means'' the following:

'' 'Pre-retail medical product' has the meaning given that term in 18 U.S.C. § 670(e).''; and by inserting after the paragraph that begins '' 'Publicly traded company' means'' the following:

'' 'Supply chain' has the meaning given that term in 18 U.S.C. § 670(e).''; in Note 3(F)(i) by striking ''Note 9(A)'' and inserting ''Note 10(A)''; and by renumbering Notes 7 through 19 as 8 through 20; by inserting after Note 6 the following:

''7. *Application of Subsection (b)(8)(B).*—If subsection (b)(8)(B) applies, do not apply an adjustment under § 3B1.3 (Abuse of Position of Trust or Use of Special Skill).''; and in Note 20 (as so renumbered) by adding at the end of subparagraph (A)(ii) as the last sentence the following: ''Similarly, an upward departure would be warranted in a case involving conduct described in 18 U.S.C. § 670 if the offense resulted in serious bodily injury or death, including serious bodily injury or death resulting from the use of the pre-retail medical product.''.

The Commentary to § 2B1.1 captioned ''Background'' is amended by inserting before the paragraph that begins ''Subsection (b)(9)(D)'' the following:

''Subsection (b)(8) implements the directive to the Commission in section 7 of Public Law 112–186.''.

However, if § 2B1.1(b) already contains a paragraph (8) because the renumbering of paragraphs by Amendment 1 of this document has not taken effect, renumber the new paragraph inserted into § 2B1.1(b) as paragraph (8A) rather than paragraph (8), and revise the Commentary so that the new Note 7 inserted into the Application Notes and the new paragraph inserted into the Background refer to subsection (b)(8A) rather than subsection (b)(8).

Appendix A (Statutory Index) is amended by inserting after the line referenced to 18 U.S.C. § 669 the following:

''18 U.S.C. § 670 2B1.1''.

Reason for Amendment: This amendment responds to the Strengthening and Focusing Enforcement to Deter Organized Stealing and Enhance Safety Act of 2012, Public Law 112–186 (enacted October 5, 2012) (the ''Act''), which addressed various offenses involving ''pre-retail medical products,'' defined as ''a medical product that has not yet been made available for retail purchase by a consumer.'' The Act created a new criminal offense at 18 U.S.C. § 670 for theft of pre-retail medical products, increased statutory penalties for certain related offenses when a pre-retail medical product is involved, and contained a directive to the Commission.

New Offense at 18 U.S.C. § 670

The new offense at section 670 makes it unlawful for any person in (or using any means or facility of) interstate or foreign commerce to—

(1) embezzle, steal, or by fraud or deception obtain, or knowingly and unlawfully take, carry away, or conceal a pre-retail medical product;

(2) knowingly and falsely make, alter, forge, or counterfeit the labeling or documentation (including documentation relating to origination or shipping) of a pre-retail medical product;

(3) knowingly possess, transport, or traffic in a pre-retail medical product that was involved in a violation of paragraph (1) or (2);

(4) with intent to defraud, buy, or otherwise obtain, a pre-retail medical product that has expired or been stolen;

(5) with intent to defraud, sell, or distribute, a pre-retail medical product that is expired or stolen; or

(6) attempt or conspire to violate any of paragraphs (1) through (5).

The offense generally carries a statutory maximum term of imprisonment of three years. If the offense is an ''aggravated offense,'' however, higher statutory maximum terms of imprisonment are provided. The offense is an ''aggravated offense'' if—

(1) the defendant is employed by, or is an agent of, an organization in the supply chain for the pre-retail medical product; or

(2) the violation—

(A) involves the use of violence, force, or a threat of violence or force;

(B) involves the use of a deadly weapon;

(C) results in serious bodily injury or death, including serious bodily injury or death resulting from the use of the medical product involved; or

(D) is subsequent to a prior conviction for an offense under section 670.

Specifically, the higher statutory maximum terms of imprisonment are:

(1) Five years, if—

(A) the defendant is employed by, or is an agent of, an organization in the supply chain for the pre-retail medical product; or

(B) the violation (i) involves the use of violence, force, or a threat of violence or force, (ii) involves the use of a deadly weapon, or (iii) is subsequent to a prior conviction for an offense under section 670.

(2) 15 years, if the value of the medical products involved in the offense is $5,000 or greater.

(3) 20 years, if both (1) and (2) apply.

(4) 30 years, if the offense results in serious bodily injury or death, including serious bodily injury or death resulting from the use of the medical product involved.

The amendment amends Appendix A (Statutory Index) to reference the new offense at 18 U.S.C. § 670 to § 2B1.1 (Theft, Property Destruction, and Fraud). The Commission concluded that § 2B1.1 is the appropriate guideline because the elements of the new offense include theft or fraud.

Response to Directive

Section 7 of the Act directs the Commission to ''review and, if appropriate, amend'' the federal sentencing guidelines and policy statements applicable to the new offense and the related offenses ''to reflect the intent of Congress that penalties for such offenses be sufficient to deter and punish such offenses, and appropriately account for the actual harm to the public from these offenses.'' The amendment amends § 2B1.1 to address offenses involving pre-retail medical products in two ways.

First, the amendment adds a new specific offense characteristic at § 2B1.1(b)(8) that provides a two-pronged enhancement with an instruction to apply the greater. Prong (A) provides a 2-level enhancement if the offense involved conduct described in 18 U.S.C. § 670. Prong (B) provides a 4-level enhancement if the offense involved conduct described in 18 U.S.C. § 670 and the defendant was employed by, or an agent of, an organization in the supply chain for the pre-retail product. Accompanying this new specific offense characteristic is new Commentary providing that, if prong (B) applies, ''do not apply an adjustment under § 3B1.3 (Abuse of Position of Trust or Use of Special Skill).''

Based on public comment, testimony and sentencing data, the Commission concluded that an enhancement differentiating fraud and theft offenses involving medical products from those involving other products is warranted by the additional risk such offenses pose to public health and safety. In addition, such offenses undermine the public's confidence in the medical regulatory and distribution system. The Commission also concluded that the risks and harms it identified would be present in any theft or fraud offense involving a pre-retail medical product, regardless of the offense of conviction. Therefore application of the new specific offense characteristic is not limited to offenses charged under 18 U.S.C. § 670.

The amendment provides a 4-level enhancement for defendants who commit such offenses while employed in the supply chain for the pre-retail medical product. Such defendants are subject to an increased statutory maximum and the Commission determined that a heightened enhancement should apply to reflect the likelihood that the defendant's position in the supply chain facilitated the commission or concealment of the offense. Defendants who receive the 4-level enhancement are not subject to the adjustment at § 3B1.3 because the new enhancement adequately accounts for the concerns covered by § 3B1.3. The Commission determined that existing specific offense characteristics generally account for other aggravating factors included in the Act, such as loss, use or threat of force, risk of death or serious bodily injury, and weapon involvement, and therefore additional new specific offense characteristics are not necessary. *See, e.g.,* ''§§ 2B1.1(b)(1), (b)(3), and (b)(15) (as redesignated by the amendment).

Second, it amends the upward departure provisions in the Commentary to § 2B1.1 at Application Note 19(A) to provide—as an example of a case in which an upward departure would be warranted—a case ''involving conduct described in 18 U.S.C. § 670 if the offense resulted in serious bodily injury or death, including serious bodily injury or death resulting from the use of the pre-retail medical product.'' Public comment and testimony indicated that § 2B1.1 may not adequately account for the harm created by theft or fraud offenses involving pre-retail medical products when such serious bodily injury or death actually occurs as a result of the offense. For example, some pre-retail medical products are stolen as part of a scheme to re-sell them into the supply chain, but if the products have not been properly stored in the interim, their subsequent use can seriously injure the individual consumers who buy and use them. Thus, the amendment expands the scope of the existing upward departure provision to address such harms and to clarify that an upward departure is appropriate in such cases not only if serious bodily injury or death occurred during the theft or fraud, but also if such serious bodily injury or death resulted from the victim's use of a pre-retail medical product that had previously been obtained by theft or fraud.

Finally, the proposed amendment amends the Commentary to § 2B1.1 to provide relevant definitions and make other conforming changes.

3. *Amendment:* Section 2B5.3(b) is amended by renumbering paragraph (5) as (6); by inserting after paragraph (4) the following:

''(5) If the offense involved a counterfeit drug, increase by 2 levels.''; and by inserting after paragraph (6) (as so renumbered) the following:

''(7) If the offense involved a counterfeit military good or service the use, malfunction, or failure of which is likely to cause (A) the disclosure of classified information; (B) impairment of combat operations; or (C) other significant harm to (i) a combat operation, (ii) a member of the Armed Forces, or (iii) national security, increase by 2 levels. If the resulting offense level is less than level 14, increase to level 14.''.

The Commentary to § 2B5.3 captioned ''Application Notes'' is amended in Note 1 by inserting after the paragraph that begins '''Commercial advantage'' the following:

'''Counterfeit drug' has the meaning given that term in 18 U.S.C. § 2320(f)(6).

'''Counterfeit military good or service' has the meaning given that term in 18 U.S.C. § 2320(f)(4).''; by renumbering Notes 3 and 4 as 4 and 5; by inserting after Note 2 the following:

''3. *Application of Subsection (b)(7).*—In subsection (b)(7), 'other significant harm to a member of the Armed Forces' means significant harm other than serious bodily injury or death. In a case in which the offense involved a counterfeit military good or service the use, malfunction, or failure of which is likely to cause serious bodily injury or death, subsection (b)(6)(A) (conscious or reckless risk of serious bodily injury or death) would apply.''; and in Note 5 (as so renumbered) by adding at the end the following:

''(D) The offense resulted in death or serious bodily injury.''.

The Commentary to § 2B5.3 captioned ''Background'' is amended by inserting after the paragraph that begins ''Subsection (b)(1)'' the following:

'' Subsection (b)(5) implements the directive to the Commission in section 717 of Public Law 112B144.''.

Appendix A (Statutory Index) is amended by striking the line referenced to 21 U.S.C. § 333(b) and inserting the following:

''21 U.S.C. § 333(b)(1)–(6) 2N2.1
21 U.S.C. § 333(b)(7) 2N1.1''.

Reason for Amendment: This amendment responds to two recent Acts that made changes to 18 U.S.C. § 2320 (Trafficking in counterfeit goods or services). One Act increased penalties for offenses involving counterfeit military goods and services; the other increased penalties for offenses involving counterfeit drugs and included a directive to the Commission. The amendment also responds to recent statutory changes to 21 U.S.C. § 333 (Penalties for violations of the Federal Food, Drug, and Cosmetics Act) that increase penalties for offenses involving intentionally adulterated drugs.

Section 2320 and Counterfeit Military Goods and Services

First, the amendment responds to changes to section 2320 made by the National Defense Authorization Act for Fiscal Year 2012, Public Law 112–81 (enacted December 31, 2011) (the ''NDAA''). In general, section 2320 prohibits trafficking in goods or services using a counterfeit mark, and provides a statutory maximum term of imprisonment of 10 years, or 20 years for a second or subsequent offense. If the offender knowingly or recklessly causes or attempts to cause serious bodily injury or death, the statutory maximum is increased to 20 years or any term of years or life, respectively. Offenses under section 2320 are referenced in Appendix A (Statutory Index) to § 2B5.3 (Criminal Infringement of Copyright or Trademark).

Section 818 of the NDAA amended section 2320 to add a new subsection (a)(3) that prohibits trafficking in counterfeit military goods and services, the use, malfunction, or failure of which is likely to cause serious bodily injury or death, the disclosure of classified information, impairment of combat operations, or other significant harm to a combat operation, a member of the Armed Forces, or national security. A ''counterfeit military good or service'' is defined as a good or service that uses a counterfeit mark and that (A) is falsely identified or labeled as meeting military specifications, or (B) is intended for use in a military or national security application. *See* 18 U.S.C. § 2320(f)(4). An individual who commits an offense

under subsection (a)(3) is subject to a statutory maximum term of imprisonment of 20 years, or 30 years for a second or subsequent offense. *See* 18 U.S.C. § 2320(b)(3).

The legislative history of the NDAA indicates that Congress amended section 2320 because of concerns about national security and the protection of United States servicemen and women. After reviewing the legislative history, public comment, testimony, and data, the Commission determined that an offense involving counterfeit military goods and services that jeopardizes the safety of United States troops and compromises mission effectiveness warrants increased punishment.

Specifically, the amendment addresses offenses involving counterfeit military goods and services by amending § 2B5.3 to create a new specific offense characteristic at subsection (b)(7). Subsection (b)(7) provides a 2-level enhancement and a minimum offense level of 14 if the offense involves a counterfeit military good or service the use, malfunction, or failure of which is likely to cause the disclosure of classified information, impairment of combat operations, or other significant harm to a combat operation, a member of the Armed Forces, or to national security. The Commission set the minimum offense level at 14 so that it would be proportionate to the minimum offense level in the enhancement for ''conscious or reckless risk of death or serious bodily injury'' at subsection (b)(5)(A). That enhancement is moved from (b)(5)(A) to (b)(6)(A) by the amendment.

Although section 2320(a)(3) includes offenses that are likely to cause ''serious bodily injury or death,'' the new specific offense characteristic does not because the Commission determined that such risk of harm is adequately addressed by the existing enhancement for offenses involving the ''conscious or reckless risk of death or serious bodily injury.'' Consistent with that approach, the amendment includes commentary providing that the ''other significant harm'' specified in subsection (b)(7) does not include death or serious bodily injury and that § 2B5.3(b)(6)(A) would apply if the offense involved a counterfeit military good or service the use, malfunction, or failure of which is likely to cause serious bodily injury or death.

Section 2320 and Counterfeit Drugs

Second, the amendment responds to changes made by section 717 of the Food and Drug Administration Safety and Innovation Act, Public Law 112–144 (enacted July 9, 2012) (the ''FDASIA''), which amended section 2320 to add a new subsection (a)(4) that prohibits trafficking in a counterfeit drug. A ''counterfeit drug'' is a drug, as defined by section 201 of the Federal Food, Drug, and Cosmetic Act (21 U.S.C. § 321), that uses a counterfeit mark. *See* 18 U.S.C. § 2320(f)(6). An individual who commits an offense under subsection (a)(4) is subject to the same statutory maximum term of imprisonment as for an offense involving a counterfeit military good or service—20 years, or 30 years for a second or subsequent offense. *See* 18 U.S.C. 2320(b)(3).

Section 717 of the FDASIA also contained a directive to the Commission to ''review and amend, if appropriate'' the guidelines and policy statements applicable to persons convicted of an offense described in section 2320(a)(4)—*i.e.,* offenses involving counterfeit drugs—''in order to reflect the intent of Congress that such penalties be increased in comparison to those currently provided by the guidelines and policy statements.'' *See* Public Law 112–144, § 717(b)(1). In addition, section 717(b)(2) provides that, in responding to the directive, the Commission shall, among other things, ensure that the guidelines reflect the serious nature of section 2320(a)(4) offenses and consider the extent to which the guidelines account for the potential and actual harm to the public resulting from such offenses.

After reviewing the legislative history of the FDASIA, public comment, testimony, and data, the Commission determined that offenses involving counterfeit drugs involve a threat to public safety and undermine the public's confidence in the drug supply chain. Furthermore, unlike many other goods covered by the infringement guideline, offenses involving counterfeit drugs circumvent a regulatory scheme established to protect the health and safety of the public. Accordingly, the amendment responds to the directive by adding a new specific offense characteristic at § 2B5.3(b)(5) that provides a 2-level enhancement if the offense involves a counterfeit drug.

Offenses Resulting in Death or Serious Bodily Injury

Third, the amendment amends the Commentary to '2B5.3 to add a new upward departure consideration if the offense resulted in death or serious bodily injury. The addition of this departure consideration recognizes the distinction between an offense involving the risk of death or serious bodily injury and one in which death or serious bodily injury actually results. Departures for these reasons are already authorized in the guidelines, *see* §§ 5K2.1 (Death) (Policy Statement), 5K2.2 (Physical Injury) (Policy Statement), but the amendment is intended to heighten awareness of the availability of a departure in such cases.

Section 333 and Offenses Involving Intentionally Adulterated Drugs

Finally, the amendment provides a statutory reference for the new offense at 21 U.S.C. 333(b)(7) created by section 716 of the FDASIA. Section 333(b)(7) applies to any person who knowingly and intentionally adulterates a drug such that the drug is adulterated under certain provisions of 21 U.S.C. § 351 and has a reasonable probability of causing serious adverse health consequences or death to humans or animals. It provides a statutory maximum term of imprisonment of 20 years.

The amendment amends Appendix A (Statutory Index) to reference offenses under section 333(b)(7) to § 2N1.1 (Tampering or Attempting to Tamper Involving Risk of Death or Bodily Injury). The Commission concluded that offenses under section 333(b)(7) are similar to tampering offenses under 18 U.S.C. § 1365 (Tampering with consumer products), which are referenced to '2N1.1. In addition, the public health harms that Congress intended to target in adulteration cases are similar to those targeted by violations of section 1365(a) and are best addressed under § 2N1.1.

4. *Amendment:* The Commentary to § 2T1.1 captioned ''Application Notes'' is amended in Note 1 by inserting ''*Tax Loss.*—'' at the beginning; in Note 2 by inserting ''*Total Tax Loss Attributable to the Offense.*—'' at the beginning, and by redesignating subdivisions (a) through (e) as (A) through (E); by inserting after Note 2 the following:

''3. *Unclaimed Credits, Deductions, and Exemptions.*—In determining the tax loss, the court should account for the standard deduction and personal and dependent exemptions to which the defendant was entitled. In addition, the court should account for any unclaimed credit, deduction, or exemption that is needed to ensure a reasonable estimate of the tax loss, but only to the extent that (A) the credit, deduction, or exemption was related to the tax offense and could have been claimed at the time the tax offense was committed; (B) the credit, deduction, or exemption is reasonably and practicably ascertainable; and (C) the defendant presents information to support the credit, deduction, or exemption sufficiently in advance of sentencing to provide an adequate opportunity to

evaluate whether it has sufficient indicia of reliability to support its probable accuracy (*see* § 6A1.3 (Resolution of Disputed Factors) (Policy Statement)).

However, the court shall not account for payments to third parties made in a manner that encouraged or facilitated a separate violation of law (*e.g.,* 'under the table' payments to employees or expenses incurred to obstruct justice).

The burden is on the defendant to establish any such credit, deduction, or exemption by a preponderance of the evidence. *See* § 6A1.3, comment.''; by striking ''3. 'Criminal activity' means'' and inserting the following:

''4. *Application of Subsection (b)(1) (Criminal Activity).*—'Criminal activity' means''; by striking ''4. *Sophisticated Means Enhancement.*C'' and inserting the following:

''5. *Application of Subsection (b)(2) (Sophisticated Means).*—''; by striking ''5. A 'credit claimed'' and all that follows through the end of Note 6 and inserting the following:

''6. *Other Definitions.*—For purposes of this section:

A 'credit claimed against tax' is an item that reduces the amount of tax directly. In contrast, a 'deduction' is an item that reduces the amount of taxable income. 'Gross income' has the same meaning as it has in 26 U.S.C. § 61 and 26 CFR § 1.61.''; and in Note 7 by inserting ''*Aggregation of Individual and Corporate Tax Loss.*—'' at the beginning.

Reason for Amendment: This amendment responds to a circuit conflict regarding whether a sentencing court, in calculating tax loss as defined in § 2T1.1 (Tax Evasion; Willful Failure to File Return, Supply Information, or Pay Tax; Fraudulent or False Returns, Statements, or Other Documents), may consider previously unclaimed credits, deductions, and exemptions that the defendant legitimately could have claimed if he or she had filed an accurate tax return.

The Tenth and Second Circuits have held that a sentencing court may give the defendant credit for a legitimate but unclaimed deduction. These circuit courts generally reason that, while a district court need not speculate about unclaimed deductions if the defendant offers weak support, nothing in the guidelines prohibits a sentencing court from considering evidence of unclaimed deductions where a defendant offers convincing proof. *See United States* v. *Hoskins,* 654 F.3d 1086, 1094 (10th Cir. 2011) (''[W]here defendant offers convincing proof—where the court's exercise is neither nebulous nor complex—nothing in the Guidelines prohibits a sentencing court from considering evidence of unclaimed deductions in analyzing a defendant's estimate of the tax loss suffered by the government.''); *United States* v. *Martinez-Rios,* 143 F.3d 662, 671 (2d Cir. 1998) (holding that ''the sentencing court need not base its tax loss calculation on gross unreported income if it can make a 'more accurate determination' of the intended loss and that determination of the tax loss involves giving the defendant the benefit of legitimate but unclaimed deductions''); *United States* v. *Gordon,* 291 F.3d 181, 187 (2d Cir. 2002) (applying *Martinez-Rios,* the court held that the district court erred when it refused to consider potential unclaimed deductions in its sentencing analysis).

Six other circuit courts—the Fourth, Fifth, Seventh, Eighth, Ninth, and Eleventh—have reached the opposite conclusion, directly or indirectly holding that a court may not consider unclaimed deductions to reduce the tax loss. These circuit courts generally reason that the ''object of the [defendant's] offense'' is established by the amount stated on the fraudulent return, and that courts should not be required to reconstruct the defendant's return based on speculation regarding the many hypothetical ways the defendant could have completed the return. *See United States* v. *Delfino,* 510 F.3d 468, 473 (4th Cir. 2007) (''The law simply does not require the district court to engage in [speculation as to what deductions would have been allowed], nor does it entitle the Delfinos to the benefit of deductions they might have claimed now that they stand convicted of tax evasion.''); *United States* v. *Phelps,* 478 F.3d 680, 682 (5th Cir. 2007) (holding that the defendant could not reduce tax loss by taking a social security tax deduction that he did not claim on the false return); *United States* v. *Chavin,* 316 F.3d 666, 677 (7th Cir. 2002) (''Here, the object of [the defendant]'s offense was the amount by which he underreported and fraudulently stated his tax liability on his return; reference to other unrelated mistakes on the return such as unclaimed deductions tells us nothing about the amount of loss to the government that his scheme intended to create.''); *United States* v. *Psihos,* 683 F.3d 777, 781–82 (7th Cir. 2012) (following *Chavin* in disallowing consideration of unclaimed deductions); *United States* v. *Sherman,* 372 F.App'x 668, 676–77 (8th Cir. 2010); *United States* v. *Blevins,* 542 F.3d 1200, 1203 (8th Cir. 2008) (declining to decide ''whether an unclaimed tax benefit may ever offset tax loss,'' but finding the district court properly declined to reduce tax loss based on taxpayers' unclaimed deductions); *United States* v. *Yip,* 592 F.3d 1035, 1041 (9th Cir. 2010) (''We hold that § 2T1.1 does not entitle a defendant to reduce the tax loss charged to him by the amount of potentially legitimate, but unclaimed, deductions even if those deductions are related to the offense.''); *United States* v. *Clarke,* 562 F.3d 1158, 1165 (11th Cir. 2009) (holding that the defendant was not entitled to a tax loss calculation based on a filing status other than the one he actually used; ''[t]he district court did not err in computing the tax loss based on the fraudulent return Clarke actually filed, and not on the tax return Clarke could have filed but did not.'').

The amendment resolves the conflict by amending the Commentary to § 2T1.1 to establish a new application note regarding the consideration of unclaimed credits, deductions, or exemptions in calculating a defendant's tax loss. This amendment reflects the Commission's view that consideration of legitimate unclaimed credits, deductions, or exemptions, subject to certain limitations and exclusions, is most consistent with existing provisions regarding the calculation of tax loss in § 2T1.1. *See, e.g.,* USSG § 2T1.1, comment. (n.1) (''the guidelines contemplate that the court will simply make a reasonable estimate based on the available facts''); USSG § 2T1.1, comment. (backg'd.) (''a greater tax loss is obviously more harmful to the treasury and more serious than a smaller one with otherwise similar characteristics''); USSG § 2T1.1, comment. (n.1) (allowing a sentencing court to go beyond the presumptions set forth in the guideline if ''the government or defense provides sufficient information for a more accurate assessment of the tax loss,'' and providing ''the court should use any method of determining the tax loss that appears appropriate to reasonably calculate the loss that would have resulted had the offense been successfully completed'').

The new application note first provides that courts should always account for the standard deduction and personal and dependent exemptions to which the defendant was entitled. The Commission received public comment and testimony that such deductions and exemptions are commonly considered and accepted by the government during the course of its investigation and during the course of plea negotiations. Consistent with this standard practice, the Commission determined that

accounting for these generally undisputed and readily verifiable deductions and exemptions where they are not previously claimed (most commonly where the offense involves a failure to file a tax return) is appropriate.

The new application note further provides that courts should also account for any other previously unclaimed credit, deduction, or exemption that is needed to ensure a reasonable estimate of the tax loss, but only to the extent certain conditions are met. First, the credit, deduction, or exemption must be one that was related to the tax offense and could have been claimed at the time the tax offense was committed. This condition reflects the Commission's determination that a defendant should not be permitted to invoke unforeseen or after-the-fact changes or characterizations—such as offsetting losses that occur before or after the relevant tax year or substituting a more advantageous depreciation method or filing status—to lower the tax loss. To permit a defendant to optimize his return in this manner would unjustly reward defendants, and could require unjustifiable speculation and complexity at the sentencing hearing.

Second, the otherwise unclaimed credit, deduction, or exemption must be reasonably and practicably ascertainable. Consistent with the instruction in Application Note 1, this condition reaffirms the Commission's position that sentencing courts need only make a reasonable estimate of tax loss. In this regard, the Commission recognized that consideration of some unclaimed credits, deductions, or exemptions could require sentencing courts to make unnecessarily complex tax determinations, and therefore concluded that limiting consideration of unclaimed credits, deductions, or exemptions to those that are reasonably and practicably ascertainable is appropriate.

Third, the defendant must present information to support the credit, deduction, or exemption sufficiently in advance of sentencing to provide an adequate opportunity to evaluate whether it has sufficient indicia of reliability to support its probable accuracy. Consistent with the principles set forth in § 6A1.3 (Resolution of Disputed Factors) (Policy Statement), this condition ensures that the parties have an adequate opportunity to present information relevant to the court's consideration of any unclaimed credits, deductions, or exemptions raised at sentencing.

In addition, the new application note provides that certain categories of credits, deductions, or exemptions shall not be considered by the court in any case. In particular, ''the court shall not account for payments to third parties made in a manner that encouraged or facilitated a separate violation of law (*e.g.,* 'under the table' payments to employees or expenses incurred to obstruct justice).'' The Commission determined that payments made in this manner result in additional harm to the tax system and the legal system as a whole. Therefore, to use them to reduce the tax loss would unjustifiably benefit the defendant and would result in a tax loss figure that understates the seriousness of the offense and the culpability of the defendant.

Finally, the application note makes clear that the burden is on the defendant to establish any credit, deduction, or exemption permitted under this new application note by a preponderance of the evidence, which is also consistent with the commentary in § 6A1.3.

5. *Amendment:* The Commentary to § 3E1.1 captioned ''Application Notes'' is amended in Note 6 by adding at the end of the paragraph that begins ''Because the Government'' the following as the last sentence: ''The government should not withhold such a motion based on interests not identified in § 3E1.1, such as whether the defendant agrees to waive his or her right to appeal.''; and by adding after the paragraph that begins ''Because the Government'' the following new paragraph:

''If the government files such a motion, and the court in deciding whether to grant the motion also determines that the defendant has assisted authorities in the investigation or prosecution of his own misconduct by timely notifying authorities of his intention to enter a plea of guilty, thereby permitting the government to avoid preparing for trial and permitting the government and the court to allocate their resources efficiently, the court should grant the motion.''.

The Commentary to § 3E1.1 captioned ''Background'' is amended in the paragraph that begins ''Section 401(g)'' by striking ''the last paragraph'' and inserting ''the first sentence of the second paragraph''.

Reason for Amendment: This amendment addresses two circuit conflicts involving the guideline for acceptance of responsibility, § 3E1.1 (Acceptance of Responsibility). A defendant who clearly demonstrates acceptance of responsibility for his offense receives a 2-level reduction under subsection (a) of § 3E1.1. The two circuit conflicts both involve the circumstances under which the defendant is eligible for a third level of reduction under subsection (b) of § 3E1.1. Subsection (b) provides:

(b) If the defendant qualifies for a decrease under subsection (a), the offense level determined prior to the operation of subsection (a) is level 16 or greater, and upon motion of the government stating that the defendant has assisted authorities in the investigation or prosecution of his own misconduct by timely notifying authorities of his intention to enter a plea of guilty, thereby permitting the government to avoid preparing for trial and permitting the government and the court to allocate their resources efficiently, decrease the offense level by 1 additional level.

The first circuit conflict involves the government's discretion under subsection (b) and, in particular, whether the government may withhold a motion based on an interest not identified in § 3E1.1, such as the defendant's refusal to waive his right to appeal. The second conflict involves the court's discretion under subsection (b) and, in particular, whether the court may decline to apply the third level of reduction when the government has moved for it.

These circuit conflicts are unusual in that they involve guideline and commentary provisions that Congress directly amended. *See* section 401(g) of the Prosecutorial Remedies and Other Tools to end the Exploitation of Children Today Act of 2003, Public Law 108–21 (the ''PROTECT Act''); *see also* USSG App. C, Amendment 649 (effective April 30, 2003) (implementing amendments to the guidelines made directly by the PROTECT Act). They also implicate a congressional directive to the Commission not to ''alter or repeal'' the congressional amendments. *See* section 401(j)(4) of the PROTECT Act. Accordingly, in considering these conflicts, the Commission has not only reviewed public comment, sentencing data, case law, and the other types of information it ordinarily considers, but has also studied the operation of § 3E1.1 before the PROTECT Act, the congressional action to amend § 3E1.1, and the legislative history of that congressional action.

The Government's Discretion to Withhold the Motion

The first circuit conflict involves the government's discretion under subsection (b) and, in particular, whether the government may withhold a motion based on an interest not identified in § 3E1.1, such as the defendant's refusal to waive his right to appeal.

Several circuits have held that a defendant's refusal to sign an appellate waiver is a legitimate reason for the government to withhold a § 3E1.1(b) motion. *See, e.g., United States* v. *Johnson,* 581 F.3d 994, 1002 (9th Cir. 2009) (holding that ''allocation and expenditure of prosecutorial resources for the purposes of defending an appeal is a rational basis'' for such refusal); *United States* v. *Deberry,* 576 F.3d 708, 711 (7th Cir. 2009) (holding that requiring the defendant to sign an appeal waiver would avoid ''expense and uncertainty'' on appeal); *United States* v. *Newson,* 515 F.3d 374, 378 (5th Cir. 2008) (holding that the government's interests under § 3E1.1 encompass not only the government's time and effort at prejudgment stage but also at post-judgment proceedings).

In contrast, the Fourth Circuit has held that a defendant's refusal to sign an appellate waiver is not a legitimate reason for the government to withhold a § 3E1.1(b) motion. *See United States* v. *Divens,* 650 F.3d 343, 348 (4th Cir. 2011) (stating that ''the text of § 3E1.1(b) reveals a concern for the efficient allocation of *trial* resources, not *appellate* resources'' [emphasis in original]); *see also United States* v. *Davis,* No. 12–3552, slip op. at 5, __ F.3d __ (7th Cir., April 9, 2013) (Rovner, J., concurring) (''insisting that [the defendant] waive his right to appeal before he may receive the maximum credit under the Guidelines for accepting responsibility serves none of the interests identified in section 3E1.1''). The majority in *Davis* called for the conflict to be resolved, stating: ''Resolution of this conflict is the province of the Supreme Court or the Sentencing Commission.'' *Davis,* slip op. at 3, __ F.3d at __ (per curiam). The Second Circuit, stating that the Fourth Circuit's reasoning in *Divens* applies ''with equal force'' to the defendant's request for an evidentiary hearing on sentencing issues, held that the government may not withhold a § 3E1.1 motion based upon such a request. *See United States* v. *Lee,* 653 F.3d 170, 175 (2d Cir. 2011).

The PROTECT Act added Commentary to § 3E1.1 stating that ''[b]ecause the Government is in the best position to determine whether the defendant has assisted authorities in a manner that avoids preparing for trial, an adjustment under subsection (b) may only be granted upon a formal motion by the Government at the time of sentencing.'' *See* § 3E1.1, comment. (n.6). The PROTECT Act also amended § 3E1.1(b) to provide that the government motion state, among other things, that the defendant's notification of his intention to enter a plea of guilty permitted ''the government to avoid preparing for trial and . . . the government and the court to allocate their resources efficiently . . .''.

In its study of the PROTECT Act, the Commission could discern no congressional intent to allow decisions under § 3E1.1 to be based on interests not identified in § 3E1.1. Furthermore, consistent with *Divens* and the concurrence in *Davis,* the Commission determined that the defendant's waiver of his or her right to appeal is an example of an interest not identified in § 3E1.1. Accordingly, this amendment adds an additional sentence to the Commentary stating that ''[t]he government should not withhold such a motion based on interests not identified in § 3E1.1, such as whether the defendant agrees to waive his or her right to appeal.''

The Court's Discretion to Deny the Motion

The second conflict involves the court's discretion under subsection (b) and, in particular, whether the court may decline to apply the third level of reduction when the government has moved for it.

The Seventh Circuit has held that if the government makes the motion (and the other two requirements of subsection (b) are met, *i.e.,* the defendant qualifies for the 2-level decrease and the offense level is level 16 or greater), the third level of reduction must be awarded. *See United States* v. *Mount,* 675 F.3d 1052 (7th Cir. 2012).

In contrast, the Fifth Circuit has held that the district court retains discretion to deny the motion. *See United States* v. *Williamson,* 598 F.3d 227, 230 (5th Cir. 2010). In *Williamson,* the defendant was convicted after jury trial but successfully appealed. After remand, he pled guilty to a lesser offense. The government moved for the third level of reduction, but the court declined to grant it because ''regardless of however much additional trial preparation the government avoided through Williamson's guilty plea following remand, the preparation for the initial trial and the use of the court's resources for that trial meant that the § 3E1.1(b) benefits to the government and the court were not obtained''. *Id.* at 231. The Fifth Circuit affirmed, holding that the decision whether to grant the third level of reduction ''is the district court's—not the government's—even though the court may only do so on the government's motion''. *Id.* at 230.

This amendment amends the Commentary to § 3E1.1 by adding the following statement: ''If the government files such a motion, and the court in deciding whether to grant the motion also determines that the defendant has assisted authorities in the investigation or prosecution of his own misconduct by timely notifying authorities of his intention to enter a plea of guilty, thereby permitting the government to avoid preparing for trial and permitting the government and the court to allocate their resources efficiently, the court should grant the motion.''

In its study of the PROTECT Act, the Commission could discern no congressional intent to take away from the court its responsibility under § 3E1.1 to make its own determination of whether the conditions were met. In particular, both the language added to the Commentary by the PROTECT Act and the legislative history of the PROTECT Act speak in terms of allowing the court discretion to ''grant'' the third level of reduction. *See* USSG § 3E1.1, comment. (n.6) (stating that the third level of reduction ''may only be granted upon a formal motion by the Government''); H.R. Rep. No. 108–66, at 59 (2003) (Conf. Rep.) (stating that the PROTECT Act amendment would ''only allow courts to grant an additional third point reduction for 'acceptance of responsibility' upon motion of the government.''). In addition, the Commission observes that one of the considerations in § 3E1.1(b) is whether the defendant's actions permitted the court to allocate its resources efficiently, and the court is in the best position to make that determination. Accordingly, consistent with congressional intent, this amendment recognizes that the court continues to have discretion to decide whether to grant the third level of reduction.

Finally, and as mentioned above, the Commission in its study of the PROTECT Act could discern no congressional intent to allow decisions under § 3E1.1 to be based on interests not identified in § 3E1.1. For that reason, this amendment indicates that, if the government has filed the motion and the court also determines that the circumstances identified in § 3E1.1 are present, the court should grant the motion.

6. *Amendment:* The Commentary to § 5G1.3 captioned ''Background'' is amended by striking ''In a case in which'' and all that follows through ''Exercise of that authority,'' and inserting ''Federal courts generally 'have discretion to select whether the sentences they impose will run concurrently or consecutively with respect to other sentences that they impose, or that have been imposed in other proceedings, including state

proceedings.' *See Setser* v. *United States,* 132 S. Ct. 1463, 1468 (2012); 18 U.S.C. § 3584(a). Federal courts also generally have discretion to order that the sentences they impose will run concurrently with or consecutively to other state sentences that are anticipated but not yet imposed. *See Setser,* 132 S. Ct. at 1468. Exercise of that discretion''.

Reason for Amendment: This amendment responds to a recent Supreme Court decision that federal courts have discretion to order that the sentence run consecutively to (or concurrently with) an anticipated, but not yet imposed, state sentence. *See Setser* v. *United States,* 132 S. Ct. 1463, 1468 (2012).

The discretion recognized in *Setser* for anticipated state sentences is similar to the discretion that federal courts have under 18 U.S.C. § 3584 for previously imposed sentences. Under section 3584, a federal court imposing a sentence generally has discretion to order that the sentence run consecutively to (or, in the alternative, concurrently with) a term of imprisonment previously imposed but not yet discharged. *See* 18 U.S.C. § 3584(a). Section 5G1.3 (Imposition of a Sentence on a Defendant Subject to an Undischarged Term of Imprisonment) provides guidance to the court in determining whether, and how, to use the discretion under section 3584, *i.e.,* whether the sentence should run consecutively to (or, in the alternative, concurrently with) the prior undischarged term of imprisonment.

The amendment amends the background commentary to § 5G1.3 to include a statement that, in addition to the discretion provided by section 3584, federal courts also generally have discretion under *Setser* to order that the sentences they impose will run consecutively to or concurrently with other state sentences that are anticipated but not yet imposed. Determining whether, and how, to use this discretion will depend on the adequacy of the information available. *See Setser,* 132 S.Ct. at 1471 n.6 (''Of course, a district court should exercise the power to impose anticipatory consecutive (or concurrent) sentences intelligently. In some situations, a district court may have inadequate information and may forbear, but in other situations, that will not be the case.''). Adding this statement to the guideline that applies to the court's discretion under section 3584 is intended to provide heightened awareness of the court's similar discretion under *Setser.*

7. *Amendment:* The Commentary to § 2B1.1 captioned ''Application Notes'' is amended in Note 15 (as renumbered by Amendment 2) by striking ''1a(5)'' both places it appears and inserting ''1a(11)''; by striking ''1a(6)'' both places it appears and inserting ''1a(12)''; by striking ''1a(20)'' both places it appears and inserting ''1a(28)''; and by striking ''1a(23)'' both places it appears and inserting ''1a(31)''.

Section 2B2.3(b) is amended by striking paragraph (1) and inserting the following:

''(1) (Apply the greater) If—

(A) the trespass occurred (i) at a secure government facility; (ii) at a nuclear energy facility; (iii) on a vessel or aircraft of the United States; (iv) in a secure area of an airport or a seaport; (v) at a residence; (vi) at Arlington National Cemetery or a cemetery under the control of the National Cemetery Administration; (vii) at any restricted building or grounds; or (viii) on a computer system used (I) to maintain or operate a critical infrastructure; or (II) by or for a government entity in furtherance of the administration of justice, national defense, or national security, increase by 2 levels; or

(B) the trespass occurred at the White House or its grounds, or the Vice President's official residence or its grounds, increase by 4 levels.''.

The Commentary to § 2B2.3 captioned ''Application Notes'' is amended in Note 1 by inserting after the paragraph that begins '' 'Protected computer' means'' the following:

'' 'Restricted building or grounds' has the meaning given that term in 18 U.S.C. § 1752.''; and in Note 2 by inserting ''*Application of Subsection (b)(3).*—'' at the beginning.

The Notes to the Drug Quantity Table in § 2D1.1(c) are amended in each of Notes (H) and (I) by striking ''1308.11(d)(30)'' and inserting ''1308.11(d)(31)''.

The Commentary to § 2J1.2 captioned ''Application Notes'' is amended in Note 2(A) by striking ''Chapter Three, Part C'' in the heading and inserting ''§ 3C1.1''; and by striking ''Chapter Three, Part C (Obstruction and Related Adjustments)'' and inserting ''§ 3C1.1 (Obstructing or Impeding the Administration of Justice)''.

The Commentary to § 2J1.3 captioned ''Application Notes'' is amended in Note 2 by striking ''Chapter Three, Part C (Obstruction and Related Adjustments)'' and inserting ''§ 3C1.1 (Obstructing or Impeding the Administration of Justice)''; and in Note 3 by striking ''Chapter Three, Part C (Obstruction and Related Adjustments)'' and inserting ''§ 3C1.1''.

The Commentary to § 2J1.6 captioned ''Application Notes'' is amended in Note 2 by striking ''Chapter Three, Part C (Obstruction and Related Adjustments)'' and inserting ''§ 3C1.1 (Obstructing or Impeding the Administration of Justice)''.

The Commentary to § 2J1.9 captioned ''Application Notes'' is amended in Note 1 by striking ''Chapter Three, Part C (Obstruction and Related Adjustments)'' and inserting ''§ 3C1.1 (Obstructing or Impeding the Administration of Justice)''; and in Note 2 by striking ''Chapter Three, Part C (Obstruction and Related Adjustments)'' and inserting ''§ 3C1.1''.

The Commentary to § 4A1.1 captioned ''Application Notes'' is amended in each of Notes 2 and 3 by striking ''court martial'' and inserting ''court-martial''.

Section 4A1.2(g) is amended by striking ''court martial'' both places it appears and inserting ''court-martial''.

Appendix A (Statutory Index) is amended by inserting after the line referenced to 18 U.S.C. § 38 the following:

''18 U.S.C. § 39A 2A5.2''; in the line referenced to 18 U.S.C. § 554 by inserting ''2M5.1,'' after ''2B1.5,''; by inserting after the line referenced to 18 U.S.C. § 1513 the following:

''18 U.S.C. § 1514(c) 2J1.2''; by inserting after the line referenced to 18 U.S.C. § 1751(e) the following:

''18 U.S.C. § 1752 2A2.4, 2B2.3''; and by inserting after the line referenced to 19 U.S.C. § 1586(e) the following:

''19 U.S.C. § 1590(d)(1) 2T3.1

19 U.S.C. § 1590(d)(2) 2D1.1''.

Reason for Amendment: This amendment responds to recently enacted legislation and miscellaneous and technical guideline issues.

Aiming a Laser Pointer at an Aircraft

First, the amendment responds to Section 311 of the FAA Modernization and Reform Act of 2012, Public Law 112–95 (enacted February 14, 2012), which established a new criminal offense at 18 U.S.C. 39A (Aiming a laser pointer at an aircraft). The offense applies to whoever knowingly aims the beam of a laser pointer at an aircraft in the special aircraft jurisdiction of the United States or at the flight path of such an aircraft. The statutory maximum term of imprisonment is five years.

The amendment amends Appendix A (Statutory Index) to reference section 39A offenses to § 2A5.2 (Interference with Flight Crew Member or Flight Attendant; Interference with Dispatch, Navigation, Operation, or Maintenance of Mass Transportation Vehicle). Section 2A5.2 is the most analogous guideline because the offense involves interference with an aircraft in flight.

Restraining the Harassment of a Victim or Witness

Second, the amendment responds to section 3(a) of the Child Protection Act of 2012, Public Law 112–206 (enacted December 7, 2012), which established a new offense at 18 U.S.C. 1514(c) that makes it a criminal offense to knowingly and intentionally violate or attempt to violate an order issued under section 1514 (Civil action to restrain harassment of a victim or witness). The new offense has a statutory maximum term of imprisonment of five years.

The amendment amends Appendix A (Statutory Index) to reference section 1514(c) offenses to § 2J1.2 (Obstruction of Justice). Section 2J1.2 is the most analogous guideline because the offense involves interference with judicial proceedings.

Restricted Buildings and Grounds

Third, the amendment responds to the Federal Restricted Buildings and Grounds Improvement Act of 2011, Public Law 112–98 (enacted March 8, 2012), which amended the criminal offense at 18 U.S.C. § 1752 (Restricted building or grounds). As so amended, the statute defines ''restricted buildings or grounds'' to mean any restricted area (A) of the White House or its grounds, or the Vice President's official residence or its grounds; (B) of a building or grounds where the President or other person protected by the United States Secret Service is or will be temporarily visiting; or (C) of a building or grounds restricted in conjunction with an event designated as a special event of national significance. The statute makes it a crime to enter or remain; to impede or disrupt the orderly conduct of business or official functions; to obstruct or impede ingress or egress; or to engage in any physical violence against any person or property. The Act did not change the statutory maximum term of imprisonment, which is ten years if the person used or carried a deadly or dangerous weapon or firearm or if the offense results in significant bodily injury, and one year in any other case.

The amendment amends Appendix A (Statutory Index) to reference section 1752 offenses to § 2A2.4 (Obstructing or Impeding Officers) and § 2B2.3 (Trespass). These guidelines are most analogous because the elements of offenses under section 1752 involve either trespass at certain locations (*i.e.,* locations permanently or temporarily protected by the Secret Service) or interference with official business at such locations, or both.

The amendment also amends § 2B2.3(b)(1) to ensure that a trespass under section 1752 provides a 4-level enhancement if the trespass occurred at the White House or the Vice President's official residence, or a 2-level enhancement if the trespass occurred at any other location permanently or temporarily protected by the Secret Service. Section 2B2.3(b)(1) provides a 2-level enhancement if the trespass occurred at locations that involve a significant federal interest, such as nuclear facilities, airports, and seaports. A trespass at a location protected by the Secret Service is no less serious than a trespass at other locations that involve a significant federal interest and warrants an equivalent enhancement of 2 levels. Section 2B2.3(b)(1) also provides a 2-level enhancement if the trespass occurred at a residence. A trespass at the residence of the President or the Vice President is more serious and poses a greater risk of harm than a trespass at an ordinary residence and warrants an enhancement of 4 levels.

Aviation Smuggling

Fourth, the amendment responds to the Ultralight Aircraft Smuggling Prevention Act of 2012, Public Law 112–93 (enacted February 10, 2012), which amended the criminal offense at 19 U.S.C. § 1590 (Aviation smuggling) to clarify that the term ''aircraft'' includes ultralight aircraft and to cover attempts and conspiracies. Section 1590 makes it unlawful for the pilot of an aircraft to transport merchandise, or for any individual on board any aircraft to possess merchandise, knowing that the merchandise will be introduced into the United States contrary to law. It is also unlawful for a person to transfer merchandise between an aircraft and a vessel on the high seas or in the customs waters of the United States unlawfully. The Act did not change the statutory maximum terms of imprisonment, which are 20 years if any of the merchandise involved was a controlled substance, *see* § 1590(d)(2), and five years otherwise, *see* § 1590(d)(1). The amendment amends Appendix A (Statutory Index) to reference offenses under section 1590(d)(1) to § 2T3.1 (Evading Import Duties or Restrictions (Smuggling); Receiving or Trafficking in Smuggled Property). In such cases, § 2T3.1 is the most analogous guideline because the offense involves smuggling. The amendment also amends Appendix A (Statutory Index) to reference offenses under section 1590(d)(2) to § 2D1.1 (Unlawful Manufacturing, Importing, Exporting, or Trafficking (Including Possession with Intent to Commit These Offenses); Attempt or Conspiracy). In such cases, § 2D1.1 is the most analogous guideline because controlled substances are involved in these offenses.

Interaction Between Offense Guidelines in Chapter Two, Part J, and Certain Adjustments in Chapter Three, Part C

Fifth, the amendment responds to an application issue that may arise in cases in which the defendant is sentenced under an offense guideline in Chapter Two, Part J (Offenses Involving the Administration of Justice) and the defendant may also be subject to an adjustment under Chapter Three, Part C (Obstruction and Related Adjustments). Specifically, there are application notes in four Chapter Two, Part J guidelines that, it has been argued, preclude the court from applying adjustments in Chapter Three, Part C. *See, e.g., United States* v. *Duong,* 665 F.3d 364 (1st Cir. 2012) (observing that, ''according to the literal terms'' of the application notes, an adjustment under Chapter Three, Part C '' 'does not apply' '', but ''reject[ing] that premise'').

The amendment amends the relevant application notes in Chapter Two, Part J (*see* §§ 2J1.2, comment. (n.2(A)); 2J1.3, comment. (n.2); 2J1.6, comment. (n.2); 2J1.9, comment. (n.1)) to clarify the Commission's intent that they restrict the court from applying § 3C1.1 (Obstructing or Impeding the Administration of Justice) but do not restrict the court from applying §§ 3C1.2, 3C1.3, and 3C1.4. These changes resolve the application issue consistent with *Duong* and promote clarity and consistency in the application of these adjustments.

Export Offenses Under 18 U.S.C. § 554

Sixth, the amendment broadens the range of guidelines to which export offenses under 18 U.S.C. § 554 (Smuggling goods from the United States) are referenced. Section 554 makes it unlawful to export or send from the United States (or attempt to do so) any merchandise, article, or object contrary to any law or regulation of the United States. It also makes it unlawful to receive, conceal, buy, sell, or in any manner facilitate the transportation, concealment, or sale of such merchandise, article, or object, prior to exportation, knowing the same to be intended for exportation contrary to any law or regulation of the United States. Offenses under section 554 have a statutory maximum term of imprisonment of ten years, and they are referenced in Appendix A (Statutory Index) to three guidelines: §§ 2B1.5 (Theft of, Damage to, or Destruction of, Cultural Heritage Resources or Paleontological Resources; Unlawful Sale, Purchase, Exchange,

Transportation, or Receipt of Cultural Heritage Resources or Paleontological Resources), 2M5.2 (Exportation of Arms, Munitions, or Military Equipment or Services Without Required Validated Export License), and 2Q2.1 (Offenses Involving Fish, Wildlife, and Plants).

The amendment amends Appendix A (Statutory Index) to add § 2M5.1 (Evasion of Export Controls; Financial Transactions with Countries Supporting International Terrorism) to the list of guidelines to which offenses under section 554 are referenced. Not all offenses under section 554 involve munitions, cultural resources, or wildlife, so a reference to an additional guideline is warranted. For example, a section 554 offense may be based on the export of ordinary commercial goods in violation of economic sanctions or on the export of ''dual-use'' goods (*i.e.,* goods that have both commercial and military applications). For such cases, the additional reference to § 2M5.1 promotes clarity and consistency in guideline application, and the penalty structure of § 2M5.1 provides appropriate distinctions between offenses that violate national security controls and offenses that do not.

Technical and Stylistic Changes

Finally, the amendment makes certain technical and stylistic changes to the *Guidelines Manual.* First, it amends the Commentary to § 2B1.1 (Theft, Property Destruction, and Fraud) to provide updated references to the definitions contained in 7 U.S.C. 1a, which were renumbered by Public Law 111B203 (enacted July 21, 2010). Second, it amends the Notes to the Drug Quantity Table in § 2D1.1 (Unlawful Manufacturing, Importing, Exporting, or Trafficking (Including Possession with Intent to Commit These Offenses); Attempt or Conspiracy) to provide updated references to the definition of tetrahydrocannabinols contained in 21 CFR 1308.11(d), which were renumbered by 75 FR 79296 (December 20, 2010). Third, it makes several stylistic revisions in the *Guidelines Manual* to change ''court martial'' to ''court-martial''. The changes are not substantive.

[FR Doc. 2013–10678 Filed 5–3–13; 8:45 am]

BILLING CODE 2210–40–P

FEDERAL REGISTER

Vol. 78 Monday,

No. 87 May 6, 2013

Part II

Department of Health and Human Services

Centers for Medicare & Medicaid Services

42 CFR Parts 413 and 424

Medicare Program; Prospective Payment System and Consolidated Billing for Skilled Nursing Facilities for FY 2014; Proposed Rule

DEPARTMENT OF HEALTH AND HUMAN SERVICES

Centers for Medicare & Medicaid Services

42 CFR Parts 413 and 424

[CMS–1446–P]

RIN 0938–AR65

Medicare Program; Prospective Payment System and Consolidated Billing for Skilled Nursing Facilities for FY 2014

AGENCY: Centers for Medicare & Medicaid Services (CMS), HHS.

ACTION: Proposed rule.

SUMMARY: This proposed rule would update the payment rates used under the prospective payment system (PPS) for skilled nursing facilities (SNFs) for fiscal year (FY) 2014, would revise and rebase the SNF market basket, and would make certain technical and conforming revisions in the regulations text. This proposed rule also includes a proposed policy for reporting the SNF market basket forecast error correction in certain limited circumstances and a proposed new item for the Minimum Data Set (MDS), Version 3.0.

DATES: To be assured consideration, comments must be received at one of the addresses provided below, no later than 5 p.m. on July 1, 2013.

ADDRESSES: In commenting, please refer to file code CMS–1446–P. Because of staff and resource limitations, we cannot accept comments by facsimile (FAX) transmission.

You may submit comments in one of four ways (please choose only one of the ways listed):

1. *Electronically.* You may submit electronic comments on this regulation to *http://www.regulations.gov*. Follow the ''Submit a comment'' instructions.

2. *By regular mail.* You may mail written comments to the following address only: Centers for Medicare & Medicaid Services, Department of Health and Human Services, Attention: CMS–1446–P, P.O. Box 8016, Baltimore, MD 21244–8016.

Please allow sufficient time for mailed comments to be received before the close of the comment period.

3. *By express or overnight mail.* You may send written comments to the following address only: Centers for Medicare & Medicaid Services, Department of Health and Human Services, Attention: CMS–1446–P, Mail Stop C4–26–05, 7500 Security Boulevard, Baltimore, MD 21244–1850.

4. *By hand or courier.* If you prefer, you may deliver (by hand or courier) your written comments before the close of the comment period to either of the following addresses:

a. Centers for Medicare & Medicaid Services, Department of Health and Human Services, Room 445–G, Hubert H. Humphrey Building, 200 Independence Avenue SW., Washington, DC 20201.

(Because access to the interior of the Hubert H. Humphrey Building is not readily available to persons without Federal Government identification, commenters are encouraged to leave their comments in the CMS drop slots located in the main lobby of the building. A stamp-in clock is available for persons wishing to retain a proof of filing by stamping in and retaining an extra copy of the comments being filed.)

b. Centers for Medicare & Medicaid Services, Department of Health and Human Services, 7500 Security Boulevard, Baltimore, MD 21244–1850.

If you intend to deliver your comments to the Baltimore address, please call telephone number (410) 786–7195 in advance to schedule your arrival with one of our staff members.

Comments mailed to the addresses indicated as appropriate for hand or courier delivery may be delayed and received after the comment period.

For information on viewing public comments, see the beginning of the **SUPPLEMENTARY INFORMATION** section.

FOR FURTHER INFORMATION CONTACT: Penny Gershman, (410) 786–6643, for information related to clinical issues.

John Kane, (410) 786–0557, for information related to the development of the payment rates and case-mix indexes.

Kia Sidbury, (410) 786–7816, for information related to the wage index.

Bill Ullman, (410) 786–5667, for information related to level of care determinations, consolidated billing, and general information.

SUPPLEMENTARY INFORMATION:

Inspection of Public Comments: All comments received before the close of the comment period are available for viewing by the public, including any personally identifiable or confidential business information that is included in a comment. We post all comments received before the close of the comment period on the following Web site as soon as possible after they have been received: *http://www.regulations.gov*. Follow the search instructions on that Web site to view public comments.

Comments received timely will also be available for public inspection as they are received, generally beginning approximately 3 weeks after publication of a document, at the headquarters of the Centers for Medicare & Medicaid Services, 7500 Security Boulevard, Baltimore, Maryland 21244, Monday through Friday of each week from 8:30 a.m. to 4 p.m. To schedule an appointment to view public comments, phone 1–800–743–3951.

Availability of Certain Information Exclusively Through the Internet on the CMS Web Site

The Wage Index for Urban Areas Based on CBSA Labor Market Areas (Table A) and the Wage Index Based on CBSA Labor Market Areas for Rural Areas (Table B) are published in the **Federal Register** as an Addendum to the annual SNF PPS rulemaking (that is, the SNF PPS proposed and final rules or, when applicable, the current update notice). However, as of FY 2012, a number of other Medicare payment systems adopted an approach in which such tables are no longer published in the **Federal Register** in this manner, and instead are made available exclusively through the Internet; see, for example, the FY 2012 Hospital Inpatient PPS (IPPS) final rule (76 FR 51476). To be consistent with these other Medicare payment systems and streamline the published content to focus on policy discussion, we now propose to adopt a similar approach for the SNF PPS as well. As discussed in greater detail in section VI. of this proposed rule, we would revise the applicable regulations text at § 413.345 to accommodate this approach, consistent with the wording of the corresponding statutory authority at section 1888(e)(4)(H)(iii) of the Social Security Act (the Act). Under this approach, effective October 1, 2013, the individual wage index values displayed in Tables A and B of this rule would no longer be published in the **Federal Register** as part of the annual SNF PPS rulemaking, and instead would be made available exclusively through the Internet on CMS's SNF PPS Web site at *http://www.cms.gov/Medicare/Medicare-Fee-for-Service-Payment/SNFPPS/WageIndex.html*. Consistent with the provisions of section 1888(e)(4)(H)(iii) of the Act, we would continue to publish in the **Federal Register** the specific ''factors to be applied in making the area wage adjustment'' (for example, the SNF prospective payment system's use of the hospital wage index exclusive of its occupational mix adjustment) as part of our annual SNF PPS rulemaking process, but that document would no longer include a listing of the individual wage index values themselves, which would instead be made available

exclusively through the Internet on the CMS Web Site.

In addition, we note that in previous years, each rule or update notice issued under the annual SNF PPS rulemaking cycle has included a detailed reiteration of the various individual legislative provisions that have affected the SNF PPS over the years, a number of which represented temporary measures that have long since expired. That discussion, along with detailed background information on various other aspects of the SNF PPS, will now be made available exclusively on the CMS Web site as well, at *http://www.cms.gov/Medicare/Medicare-Fee-for-Service-Payment/SNFPPS/index.html*. In connection with this change, this proposed rule is presented in a revised format that also serves to consolidate material on the individual rate components that had previously appeared redundantly in several different portions of the preamble. The revised format also reorders the preamble discussion to achieve a more logical presentation, by systematically discussing each of the various rate components in the actual order in which it is applied to the SNF payment rates. For ease of reference, we are including the following crosswalk between this proposed rule's reordered preamble discussion and the material that was presented in last year's SNF PPS update notice for FY 2013 (77 FR 46214, August 2, 2012).

Crosswalk to FY 2013 Update Notice

FY 2014 Proposed Rule	FY 2013 Update Notice
I. Executive Summary	I.
II.A Statutory Basis and Scope	II.A
II.B Initial Transition	II.A
II.C Required Annual Rate Updates	II.B, III.D
III.A Federal Base Rates	II.A, II.G.1, III.A.1
III.B.1 SNF Market Basket Index	II.G.2, V
III.B.2 Use of the SNF Market Basket Percentage	II.G.2, V.A
III.B.3 Forecast Error Adjustment	II.G.2, V.B
III.B.4 Multifactor Productivity Adjustment (MFP)	II.G.2, V.C
III.B.4.1 Incorporating the MFP into the Market Basket Update	V.C.1
III.B.5 Market Basket Update Factor for FY 2014	V.D
III.C Case-Mix (C–M) Adjustment	II.G.1, III.A.2, III.B
III.D Wage Index Adjustment	III.C
III.E Adjusted Rate Computation Example	III.F
IV.A SNF Level of Care—Administrative Presumption	II.A, III.E
IV.B Consolidated Billing	II.A, VI
IV.C Payment for SNF-Level Swing-Bed Services	II.A, VII
V.A Revising and Rebasing the SNF Market Basket Index	N/A
V.B Monitoring Impact of FY 2012 Policy Changes	IV
V.C Ensuring Accuracy in Grouping to Rehabilitation Categories	N/A
V.D SNF Therapy Research Project	N/A
VI. Provisions of the Proposed Rule and Technical Correction	N/A
VII. Collection of Information Requirements	VIII.
VIII. Response to Comments	N/A
IX. Economic Analyses	X.
Table 1 Diff. Bet. Forecasted, Actual Market Basket Increases	Table 1
Table 2 Unadjusted Federal Rate Per Diem (Urban)	Table 2
Table 3 Unadjusted Federal Rate Per Diem (Rural)	Table 3
Table 4 C–M Adjusted Federal Rates, Indexes (Urban)	Table 4
Table 5 C–M Adjusted Federal Rates, Indexes (Rural)	Table 5
Table 6 C–M Adj. Fed. Rates (Urban), Lab./Non-Lab. Components	Table 6
Table 7 C–M Adj. Fed. Rates (Rural), Lab./Non-Lab. Components	Table 7
Table 8 Rate Computation Example	Table 8
Tables 9 through 16 Revising & Rebasing SNF Market Basket	N/A
Table 17 Labor-Related Relative Importance	Table 13
Table 18 C–M Distributions by Major RUG–IV Category	Table 9
Table 19 C–M Distribution for Therapy RUG–IV Groups	Table 10
Table 20 Mode of Therapy Provision	Table 11
Table 21 Distribution of MDS Assessment Types	Table 12
Table 22 Projected Impact	Table 14
Table 23 Accounting Statement	Table 15

To assist readers in referencing sections contained in this document, we are providing the following Table of Contents.

Table of Contents

I. Executive Summary
A. Purpose
B. Summary of Major Provisions
C. Summary of Cost and Benefits
II. Background
A. Statutory Basis and Scope
B. Initial Transition
C. Required Annual Rate Updates
III. SNF PPS Rate Setting Methodology and FY 2014 Update
A. Federal Base Rates
B. SNF Market Basket Update
1. SNF Market Basket Index
2. Use of the SNF Market Basket Percentage
3. Forecast Error Adjustment
4. Multifactor Productivity Adjustment
5. Market Basket Update Factor for FY 2014
C. Case-Mix Adjustment
D. Wage Index Adjustment
E. Adjusted Rate Computation Example
IV. Additional Aspects of the SNF PPS
A. SNF Level of Care—Administrative Presumption
B. Consolidated Billing
C. Payment for SNF-Level Swing-Bed Services
V. Other Issues
A. Revising and Rebasing the SNF Market Basket Index
1. Background
2. Revising and Rebasing the SNF Market Basket
3. Price Proxies Used to Measure Cost Category Growth

4. Proposed Market Basket Estimate for the FY 2014 SNF PPS Update
5. Labor-Related Share
B. Monitoring Impact of FY 2012 Policy Changes
1. RUG Distributions
2. Group Therapy Allocation
3. MDS 3.0 Changes
4. Conclusion
C. Ensuring Accuracy in Grouping to Rehabilitation RUG–IV Categories
D. SNF Therapy Research Project
VI. Provisions of the Proposed Rule and Technical Correction
VII. Collection of Information Requirements
VIII. Response to Comments
IX. Economic Analyses
Regulation Text

Acronyms

In addition, because of the many terms to which we refer by acronym in this proposed rule, we are listing these abbreviations and their corresponding terms in alphabetical order below:

AIDS Acquired Immune Deficiency Syndrome
ARD Assessment reference date
BBA Balanced Budget Act of 1997, Pub. L. 105–33
BBRA Medicare, Medicaid, and SCHIP Balanced Budget Refinement Act of 1999, Pub. L. 106–113
BIPA Medicare, Medicaid, and SCHIP Benefits Improvement and Protection Act of 2000, Pub. L. 106–554
CAH Critical access hospital
CBSA Core-based statistical area
CFR Code of Federal Regulations
CMI Case-mix index
CMS Centers for Medicare & Medicaid Services
COT Change of therapy
ECI Employment Cost Index
EOT End of therapy
EOT–R End of therapy—resumption
FQHC Federally qualified health center
FR Federal Register
FY Fiscal year
GAO Government Accountability Office
HCPCS Healthcare Common Procedure Coding System
HOMER Home office Medicare records
IGI IHS (Information Handling Services) Global Insight, Inc.
MDS Minimum data set
MFP Multifactor productivity
MMA Medicare Prescription Drug, Improvement, and Modernization Act of 2003, Pub. L. 108–173
MSA Metropolitan statistical area
NAICS North American Industrial Classification System
OMB Office of Management and Budget
OMRA Other Medicare Required Assessment
PPS Prospective Payment System
RAI Resident assessment instrument
RAVEN Resident assessment validation entry
RFA Regulatory Flexibility Act, Pub. L. 96–354
RHC Rural health clinic
RIA Regulatory impact analysis
RUG–III Resource Utilization Groups, Version 3
RUG–V Resource Utilization Groups, Version 4
RUG–53 Refined 53-Group RUG–III Case-Mix Classification System
SCHIP State Children's Health Insurance Program
SNF Skilled nursing facility
STM Staff time measurement
STRIVE Staff time and resource intensity verification
UMRA Unfunded Mandates Reform Act, Pub. L. 104–4

I. Executive Summary

A. Purpose

This proposed rule would update the SNF prospective payment rates for FY 2014 as required under section 1888(e)(4)(E) of the Act. It would also respond to section 1888(e)(4)(H) of the Act, which requires the Secretary to ''provide for publication in the **Federal Register**'' before the August 1 that precedes the start of each fiscal year, the unadjusted federal per diem rates, the case-mix classification system, and the factors to be applied in making the area wage adjustment used in computing the prospective payment rates for that fiscal year.

B. Summary of Major Provisions

In accordance with sections 1888(e)(4)(E)(ii)(IV) and 1888(e)(5) of the Act, the federal rates in this proposed rule would reflect an update to the rates that we published in the SNF PPS update notice for FY 2013 (77 FR 46214) which reflects the SNF market basket index, adjusted by the forecast error correction, if applicable, and the multifactor productivity adjustment for FY 2014.

C. Summary of Cost and Benefits

Provision description	Total transfers
Proposed FY 2014 SNF PPS payment rate update.	The overall economic impact of this proposed rule would be an estimated increase of $500 million in aggregate payments to SNFs during FY 2014.

II. Background

A. Statutory Basis and Scope

As amended by section 4432 of the Balanced Budget Act of 1997 (BBA, Pub. L. 105–33, enacted on August 5, 1997), section 1888(e) of the Act provides for the implementation of a PPS for SNFs. This methodology uses prospective, case-mix adjusted per diem payment rates applicable to all covered SNF services defined in section 1888(e)(2)(A) of the Act. The SNF PPS is effective for cost reporting periods beginning on or after July 1, 1998, and covers all costs of furnishing covered SNF services (routine, ancillary, and capital-related costs) other than costs associated with approved educational activities and bad debts. Under section 1888(e)(2)(A)(i) of the Act, covered SNF services include post-hospital extended care services for which benefits are provided under Part A, as well as those items and services (other than a small number of excluded services, such as physician services) for which payment may otherwise be made under Part B and which are furnished to Medicare beneficiaries who are residents in a SNF during a covered Part A stay. A comprehensive discussion of these provisions appears in the May 12, 1998 interim final rule (63 FR 26252).

B. Initial Transition

Under sections 1888(e)(1)(A) and 1888(e)(11) of the Act, the SNF PPS included an initial, three-phase transition that blended a facility-specific rate (reflecting the individual facility's historical cost experience) with the federal case-mix adjusted rate. The transition extended through the facility's first three cost reporting periods under the PPS, up to and including the one that began in FY 2001. Thus, the SNF PPS is no longer operating under the transition, as all facilities have been paid at the full federal rate effective with cost reporting periods beginning in FY 2002. As we now base payments for SNFs entirely on the adjusted federal per diem rates, we no longer include adjustment factors under the transition related to facility-specific rates for the upcoming FY.

C. Required Annual Rate Updates

Section 1888(e)(4)(E) of the Act requires the SNF PPS payment rates to be updated annually. The most recent annual update occurred in an update notice that set forth updates to the SNF PPS payment rates for FY 2013 (77 FR 46214).

Under this requirement, section 1888(e)(4)(H) of the Act specifies that we provide for publication annually in the **Federal Register** of the following:

- The unadjusted federal per diem rates to be applied to days of covered SNF services furnished during the upcoming FY.
- The case-mix classification system to be applied with respect to these services during the upcoming FY.
- The factors to be applied in making the area wage adjustment with respect to these services.

Along with other revisions discussed later in this preamble, this proposed rule would provide the required annual updates to the per diem payment rates for SNFs for FY 2014.

III. SNF PPS Rate Setting Methodology and FY 2014 Update

A. Federal Base Rates

Under section 1888(e)(4) of the Act, the SNF PPS uses per diem federal payment rates based on mean SNF costs in a base year (FY 1995) updated for inflation to the first effective period of the PPS. We developed the federal payment rates using allowable costs from hospital-based and freestanding SNF cost reports for reporting periods beginning in FY 1995. The data used in developing the federal rates also incorporated a ''Part B add-on,'' which is an estimate of the amounts that, prior to the SNF PPS, would have been payable under Part B for covered SNF services furnished to individuals during the course of a covered Part A stay in a SNF.

In developing the rates for the initial period, we updated costs to the first effective year of the PPS (the 15-month period beginning July 1, 1998) using a SNF market basket index, and then standardized for geographic variations in wages and for the costs of facility differences in case mix. In compiling the database used to compute the federal payment rates, we excluded those providers that received new provider exemptions from the routine cost limits, as well as costs related to payments for exceptions to the routine cost limits. Using the formula that the BBA prescribed, we set the federal rates at a level equal to the weighted mean of freestanding costs plus 50 percent of the difference between the freestanding mean and weighted mean of all SNF costs (hospital-based and freestanding) combined. We computed and applied separately the payment rates for facilities located in urban and rural areas, and adjusted the portion of the federal rate attributable to wage-related costs by a wage index to reflect geographic variations in wages.

B. SNF Market Basket Update

1. SNF Market Basket Index

Section 1888(e)(5)(A) of the Act requires us to establish a SNF market basket index that reflects changes over time in the prices of an appropriate mix of goods and services included in covered SNF services. Accordingly, we have developed a SNF market basket index that encompasses the most commonly used cost categories for SNF routine services, ancillary services, and capital-related expenses. We use the SNF market basket index, adjusted in the manner described below, to update the federal rates on an annual basis. In the SNF PPS final rule for FY 2008 (72 FR 43425 through 43430), we revised and rebased the market basket, which included updating the base year from FY 1997 to FY 2004. For FY 2014, we propose to revise and rebase the market basket to reflect FY 2010 total cost data, as detailed in section V.A. of this proposed rule.

We are also proposing to determine the FY 2014 market basket increase based on the percent increase in the revised and rebased FY 2010-based SNF market basket. For the FY 2014 proposed rule, the FY 2010-based SNF market basket growth rate is estimated to be 2.3 percent, which is based on the Information Handling Services (IHS) Global Insight, Inc. (IGI) first quarter 2013 forecast with historical data through fourth quarter 2012. In section III.B.5 of this proposed rule, we discuss the specific application of this adjustment to the forthcoming annual update of the SNF PPS payment rates.

2. Use of the SNF Market Basket Percentage

Section 1888(e)(5)(B) of the Act defines the SNF market basket percentage as the percentage change in the SNF market basket index from the midpoint of the previous FY to the midpoint of the current FY. For the federal rates set forth in this proposed rule, we use the percentage change in the SNF market basket index to compute the update factor for FY 2014. This is based on the IGI first quarter 2013 forecast (with historical data through the fourth quarter 2012) of the FY 2014 percentage increase in the FY 2010-based SNF market basket index for routine, ancillary, and capital-related expenses, which is used to compute the update factor in this proposed rule. As discussed in sections III.B.3. and III.B.4. of this proposed rule, this market basket percentage change would be reduced by the forecast error correction (§ 413.337(d)(2)), and by the MFP adjustment as required by section 1888(e)(5)(B)(ii) of the Act. Finally, as discussed in section II.B. of this proposed rule, we no longer compute update factors to adjust a facility-specific portion of the SNF PPS rates, because the initial 3-phase transition period from facility-specific to full federal rates that started with cost reporting periods beginning in July 1998 has expired.

3. Forecast Error Adjustment

As discussed in the June 10, 2003 supplemental proposed rule (68 FR 34768) and finalized in the August 4, 2003, final rule (68 FR 46057 through 46059), the regulations at § 413.337(d)(2) provide for an adjustment to account for market basket forecast error. The initial adjustment for market basket forecast error applied to the update of the FY 2003 rate for FY 2004, and took into account the cumulative forecast error for the period from FY 2000 through FY 2002, resulting in an increase of 3.26 percent to the FY 2004 update. Subsequent adjustments in succeeding FYs take into account the forecast error from the most recently available FY for which there is final data, and apply the difference between the forecasted and actual change in the market basket when the difference exceeds a specified threshold. We originally used a 0.25 percentage point threshold for this purpose; however, for the reasons specified in the FY 2008 SNF PPS final rule (72 FR 43425, August 3, 2007), we adopted a 0.5 percentage point threshold effective for FY 2008 and subsequent fiscal years. As we stated in the final rule for FY 2004 that first issued the market basket forecast error adjustment (68 FR 46058, August 4, 2003), the adjustment will ''. . . reflect both upward and downward adjustments, as appropriate.''

For FY 2012 (the most recently available FY for which there is final data), the estimated increase in the market basket index was 2.7 percentage points, while the actual increase was 2.2 percentage points, resulting in the actual increase being 0.5 percentage point lower than the estimated increase. As the forecast error calculation in this instance does not permit one to determine definitively if the forecast error adjustment threshold has been exceeded, we are proposing a policy that would be applied in instances, and only those instances, where the forecast error calculation is equal to 0.5 percentage point, when rounded to one significant digit (otherwise referred to as a tenth of a percentage point), as further discussed below. When the forecast error, rounded to one significant digit, is equal to 0.5 percentage point, we propose to report the forecast error to two significant digits (otherwise referred to as a hundredth of a percentage point) so that we may determine whether the forecast error correction threshold has been exceeded and whether the forecast error adjustment should be applied under § 413.337(d)(2). This policy would apply only in those instances where the forecast error, when rounded to one significant digit, is 0.5 percentage point. For example, if the forecast error is calculated to be 0.4 percentage point when rounded to one significant digit, then no further determinations are necessary, the forecast error will be

reported as 0.4 percentage point, and a forecast error adjustment will not be applied. Likewise, if the forecast error is determined to be 0.6 percentage point when rounded to one significant digit, then no further determination is necessary, the forecast error will be reported as 0.6 percentage point, and a forecast error adjustment will be applied.

We propose that when the forecast error is determined to be 0.5 percentage point, when rounded to one significant digit, the determination of whether or not the threshold has been exceeded would be made by rounding the forecast error calculation to the second significant digit. We believe this approach is necessary and appropriate to ensure that the necessity for a forecast error adjustment is accurately determined in accordance with § 413.337(d)(2), which enables us to identify those instances where the difference between the actual and projected market basket becomes sufficiently significant to indicate that the historical price changes are not being adequately reflected. This proposed policy would enable us to distinguish between cases where the difference carried out to the second decimal place is less than the 0.5 threshold but rounds to 0.5 (0.45 to 0.49) and cases where the difference carried out to the second decimal place is greater than the 0.5 threshold but rounds to 0.5 (0.51 to 0.54). We would apply the proposed policy when the difference between the actual and projected market basket is either positive or negative 0.5 percentage point.

As stated earlier, the forecast error calculation for FY 2012 is equal to 0.5 percentage point, rounded to one significant digit, or a tenth of a percentage point. Therefore, following the proposed policy outlined above, we would determine the forecast error for FY 2012 to the second significant digit, or the hundredth of a percentage point. The forecasted FY 2012 SNF market basket percentage change was 2.7 percent. When rounded to the second significant digit, it was 2.69 percent. This would be subtracted from the actual FY 2012 SNF market basket percentage change, rounded to the second significant digit, of 2.18 percent to yield a negative forecast error correction of 0.51 percentage point. As the forecast error correction, when rounded to two significant digits, exceeds 0.5 percentage point, a forecast error adjustment would be warranted under the policy outlined in the FY 2008 SNF PPS final rule (72 FR 43425) (see § 413.337(d)(2)).

Consistent with prior applications of the forecast error adjustment since establishing the 0.5 percentage point threshold, and consistent with our applications of both the market basket adjustment and productivity adjustment described below, once we have determined that a forecast error adjustment is warranted, we will continue to apply the adjustment itself at one significant digit (otherwise referred to as a tenth of a percentage point). Therefore, because the forecasted FY 2012 SNF market basket percentage change exceeded the actual SNF market basket percentage change for FY 2012 (the most recently available FY for which there is final data) by 0.51 percentage point, the FY 2014 SNF market basket percentage change of 2.3 percent would be adjusted downward by the forecast error correction of 0.5 percentage point, resulting in a net SNF market basket increase factor of 1.8 percent. Table 1 shows the forecasted and actual market basket amounts for FY 2012.

TABLE 1—DIFFERENCE BETWEEN THE FORECASTED AND ACTUAL MARKET BASKET INCREASES FOR FY 2012

Index	Forecasted FY 2012 increase*	Actual FY 2012 increase**	FY 2012 difference
SNF (rounded to one significant digit)	2.7	2.2	−0.5
SNF (rounded to two significant digits)	2.69	2.18	−0.51

* Published in **Federal Register**; based on second quarter 2011 IGI forecast (2004-based index).
** Based on the first quarter 2013 IHS Global Insight forecast, with historical data through the fourth quarter 2012 (2004-based index).

4. Multifactor Productivity Adjustment

Section 3401(b) of the Affordable Care Act requires that, in FY 2012 (and in subsequent FYs), the market basket percentage under the SNF payment system as described in section 1888(e)(5)(B)(i) of the Act is to be reduced annually by the productivity adjustment described in section 1886(b)(3)(B)(xi)(II) of the Act. Section 1886(b)(3)(B)(xi)(II) of the Act, added by section 3401(a) of the Affordable Care Act, sets forth the definition of this productivity adjustment. The statute defines the productivity adjustment to be equal to ''the 10-year moving average of changes in annual economy-wide private nonfarm business multi-factor productivity (as projected by the Secretary for the 10-year period ending with the applicable fiscal year, year, cost-reporting period, or other annual period)'' (the MFP adjustment). The Bureau of Labor Statistics (BLS) is the agency that publishes the official measure of private nonfarm business multifactor productivity (MFP). Please see *http://www.bls.gov/mfp* to obtain the BLS historical published MFP data.

The projection of MFP is currently produced by IGI, an economic forecasting firm. To generate a forecast of MFP, IGI replicated the MFP measure calculated by the BLS, using a series of proxy variables derived from IGI's U.S. macroeconomic models. This process is described in greater detail in section III.F.3 of the FY 2012 SNF PPS final rule (76 FR 48527 through 48529).

a. Incorporating the Multifactor Productivity Adjustment Into the Market Basket Update

According to section 1888(e)(5)(A) of the Act, the Secretary ''shall establish a skilled nursing facility market basket index that reflects changes over time in the prices of an appropriate mix of goods and services included in covered skilled nursing facility services.'' As described in section III.B.1. of this proposed rule, we propose to estimate the SNF PPS market basket percentage for FY 2014 under section 1888(e)(5)(B)(i) of the Act based on the proposed FY 2010-based SNF market basket. Section 1888(e)(5)(B)(ii) of the Act, added by section 3401(b) of the Affordable Care Act, requires that for FY 2012 and each subsequent FY, after determining the market basket percentage described in section 1888(e)(5)(B)(i) of the Act, ''the Secretary shall reduce such percentage by the productivity adjustment described in section 1886(b)(3)(B)(xi)(II)'' (which we refer to as the MFP adjustment). Section 1888(e)(5)(B)(ii) of the Act further states that the reduction of the market basket percentage by the MFP adjustment may result in the market basket percentage

being less than zero for a FY, and may result in payment rates under section 1888(e) of the Act for a FY being less than such payment rates for the preceding FY. Thus, if the application of the MFP adjustment to the market basket percentage calculated under section 1888(e)(5)(B)(i) of the Act results in an MFP-adjusted market basket percentage that is less than zero, then the annual update to the unadjusted federal per diem rates under section 1888(e)(4)(E)(ii) of the Act would be negative, and such rates would decrease relative to the prior FY.

For the FY 2014 update, the MFP adjustment is calculated as the 10-year moving average of changes in MFP for the period ending September 30, 2014. In accordance with section 1888(e)(5)(B)(i) of the Act and § 413.337(d)(2) of the regulations, the market basket percentage for FY 2014 for the SNF PPS is based on IGI's first quarter 2013 forecast of the proposed FY 2010-based SNF market basket update, as adjusted by the forecast error adjustment, and is estimated to be 1.8 percent. In accordance with section 1888(e)(5)(B)(ii) of the Act (as added by section 3401(b) of the Affordable Care Act) and § 413.337(d)(3), this market basket percentage is then reduced by the MFP adjustment (the 10-year moving average of changes in MFP for the period ending September 30, 2014) of 0.4 percent, which is calculated as described above and based on IGI's first quarter 2013 forecast. The resulting MFP-adjusted SNF market basket update is equal to 1.4 percent, or 1.8 percent less 0.4 percentage point.

5. Market Basket Update Factor for FY 2014

Sections 1888(e)(4)(E)(ii)(IV) and 1888(e)(5)(i) of the Act require that the update factor used to establish the FY 2014 unadjusted federal rates be at a level equal to the market basket index percentage change. Accordingly, we determined the total growth from the average market basket level for the period of October 1, 2012 through September 30, 2013 to the average market basket level for the period of October 1, 2013 through September 30, 2014. This process yields an update factor of 2.3 percent. As further explained in section III.B.3 of this proposed rule, as applicable, we adjust the market basket update factor by the forecast error from the most recently available FY for which there is final data and apply this adjustment whenever the difference between the forecasted and actual percentage change in the market basket exceeds a 0.5 percentage point threshold. Since the forecasted FY 2012 SNF market basket percentage change exceeded the actual FY 2012 SNF market basket percentage change (FY 2012 is the most recently available FY for which there is final data) by more than 0.5 percentage point, the FY 2014 market basket of 2.3 percent would be adjusted downward by the applicable difference, in this case of 0.5 percentage points, which reduces the FY 2014 market basket update factor to 1.8 percent. In addition, for FY 2014, section 1888(e)(5)(B) of the Act requires us to reduce the market basket percentage by the MFP adjustment (the 10-year moving average of changes in MFP for the period ending September 30, 2014) of 0.4 percent, as described in section III.B.4. of this proposed rule. The resulting MFP-adjusted SNF market basket update would be equal to 1.4 percent, or 1.8 percent less 0.4 percentage point. We are proposing that if more recent data become available (for example, a more recent estimate of the FY 2010-based SNF market basket, MFP adjustment, and/or FY 2004-based SNF market basket used for the forecast error calculation), we would use such data, if appropriate, to determine the FY 2014 SNF market basket update, FY 2014 labor-related share relative importance, and MFP adjustment in the FY 2014 SNF PPS final rule. We used the SNF market basket, adjusted as described above, to adjust each per diem component of the federal rates forward to reflect the change in the average prices for FY 2014 from average prices for FY 2013. We would further adjust the rates by a wage index budget neutrality factor, described later in this section. Tables 2 and 3 reflect the updated components of the unadjusted federal rates for FY 2014, prior to adjustment for case-mix.

TABLE 2—FY 2014 UNADJUSTED FEDERAL RATE PER DIEM—URBAN

Rate component	Nursing—case-mix	Therapy—case-mix	Therapy—non-case-mix	Non-case-mix
Per Diem Amount	$165.92	$124.98	$16.46	$84.67

TABLE 3—FY 2014 UNADJUSTED FEDERAL RATE PER DIEM—RURAL

Rate component	Nursing—case-mix	Therapy—case-mix	Therapy—non-case-mix	Non-case-mix
Per Diem Amount	$158.52	$144.11	$17.58	$86.25

C. Case-Mix Adjustment

Under section 1888(e)(4)(G)(i) of the Act, the federal rate also incorporates an adjustment to account for facility case-mix, using a classification system that accounts for the relative resource utilization of different patient types. The statute specifies that the adjustment is to reflect both a resident classification system that the Secretary establishes to account for the relative resource use of different patient types, as well as resident assessment data and other data that the Secretary considers appropriate. In the interim final rule with comment period that initially implemented the SNF PPS (63 FR 26252, May 12, 1998), we developed the RUG–III case-mix classification system, which tied the amount of payment to resident resource use in combination with resident characteristic information. Staff time measurement (STM) studies conducted in 1990, 1995, and 1997 provided information on resource use (time spent by staff members on residents) and resident characteristics that enabled us not only to establish RUG–III, but also to create case-mix indexes (CMIs). The original RUG–III grouper logic was based on clinical data collected in 1990, 1995, and 1997. As discussed in the SNF PPS proposed rule for FY 2010 (74 FR 22208), we subsequently conducted a multi-year data collection and analysis under the Staff Time and Resource Intensity Verification (STRIVE) project to update the case-mix classification system for FY 2011. The resulting Resource Utilization Groups, Version 4 (RUG–IV) case-mix classification system

reflected the data collected in 2006–2007 during the STRIVE project, and was finalized in the FY 2010 SNF PPS final rule (74 FR 40288) to take effect in FY 2011 concurrently with an updated new resident assessment instrument, version 3.0 of the Minimum Data Set (MDS 3.0), which collects the clinical data used for case-mix classification under RUG–IV.

We note that case-mix classification is based, in part, on the beneficiary's need for skilled nursing care and therapy services. The case-mix classification system uses clinical data from the MDS to assign a case-mix group to each patient that is then used to calculate a per diem payment under the SNF PPS. As discussed in section IV.A of this proposed rule, the clinical orientation of the case-mix classification system supports the SNF PPS's use of an administrative presumption that considers a beneficiary's initial case-mix classification to assist in making certain SNF level of care determinations. Further, because the MDS is used as a basis for payment, as well as a clinical assessment, we have provided extensive training on proper coding and the time frames for MDS completion in our Resident Assessment Instrument (RAI) Manual. For an MDS to be considered valid for use in determining payment, the MDS assessment must be completed in compliance with the instructions in the RAI Manual in effect at the time the assessment is completed. For payment and quality monitoring purposes, the RAI Manual consists of both the Manual instructions and the interpretive guidance and policy clarifications posted on the appropriate MDS Web site at *http://www.cms.gov/Medicare/Quality-Initiatives-Patient-Assessment-Instruments/NursingHomeQualityInits/MDS30RAIManual.html.*

In addition, we note that section 511 of the Medicare Prescription Drug, Improvement, and Modernization Act of 2003 (MMA) (Pub. L. 108–173, enacted December 8, 2003) amended section 1888(e)(12) of the Act to provide for a temporary increase of 128 percent in the PPS per diem payment for any SNF residents with Acquired Immune Deficiency Syndrome (AIDS), effective with services furnished on or after October 1, 2004. This special add-on for SNF residents with AIDS was to remain in effect until ''. . . the Secretary certifies that there is an appropriate adjustment in the case mix . . . to compensate for the increased costs associated with [such] residents. . . .'' The add-on for SNF residents with AIDS is also discussed in Program Transmittal #160 (Change Request #3291), issued on April 30, 2004, which is available online at *www.cms.gov/transmittals/downloads/r160cp.pdf.* In the SNF PPS final rule for FY 2010 (74 FR 40288), we did not address the certification of the add-on for SNF residents with AIDS in that final rule's implementation of the case-mix refinements for RUG–IV, thus allowing the add-on payment required by section 511 of the MMA to remain in effect. For the limited number of SNF residents that qualify for this add-on, there is a significant increase in payments. For example, using FY 2011 data, we identified fewer than 4,100 SNF residents with a diagnosis code of 042 (Human Immunodeficiency Virus (HIV) Infection). For FY 2014, an urban facility with a resident with AIDS in RUG–IV group ''HC2'' would have a case-mix adjusted payment of $414.72 (see Table 4) before the application of the MMA adjustment. After an increase of 128 percent, this urban facility would receive a case-mix adjusted payment of approximately $945.56.

Currently, we use the ICD–9–CM code 042 to identify those residents for whom it is appropriate to apply the AIDS add-on established by section 511 of the MMA. In this context, we note that, in accordance with the requirements of the final rule published in the September 5, 2012 **Federal Register** (77 FR 54664), we will be discontinuing our current use of the International Classification of Diseases, 9th revision, Clinical Modification (ICD–9–CM), effective with the compliance date for using the International Classification of Diseases, 10th revision, Clinical Modification (ICD–10–CM) of October 1, 2014. Regarding the above-referenced ICD–9–CM diagnosis code of 042, we propose to transition to the equivalent ICD–10–CM diagnosis code of B20 upon the October 1, 2014 implementation date for conversion to ICD–10–CM, and we invite public comment on this proposal. We note that both ICD–9–CM diagnosis code 042 and ICD–10–CM diagnosis code B20 include AIDS, AIDS-related complex (ARC), and HIV infection, symptomatic, but ICD–9–CM diagnosis code 042 additionally includes AIDS-like syndrome whereas ICD–10–CM diagnosis code B20 does not. The term ''AIDS-like syndrome'' denotes a condition other than AIDS that has symptoms resembling those of AIDS, but a different etiology from the human immunodeficiency virus that causes AIDS. Accordingly, we believe that in omitting the category of AIDS-like syndrome, ICD–10–CM diagnosis code B20 actually reflects more accurately than its predecessor ICD–9–CM code the intended scope of the statutory provision, which is directed specifically at those residents who are ''. . . afflicted with acquired immune deficiency syndrome (AIDS)'' (see section 1888(e)(12)(A) of the Act, as amended by section 511 of the MMA).

Under section 1888(e)(4)(H), each update of the payment rates must include the case-mix classification methodology applicable for the coming FY. The payment rates set forth in this proposed rule reflect the use of the RUG–IV case-mix classification system from October 1, 2013, through September 30, 2014. We list the case-mix adjusted RUG–IV payment rates, provided separately for urban and rural SNFs, in Tables 4 and 5 with corresponding case-mix values. These tables do not reflect the add-on for SNF residents with AIDS enacted by section 511 of the MMA, which we apply only after making all other adjustments (such as wage and case-mix).

TABLE 4—RUG–IV CASE-MIX ADJUSTED FEDERAL RATES AND ASSOCIATED INDEXES—URBAN

RUG–IV Category	Nursing index	Therapy index	Nursing component	Therapy component	Non-case mix therapy comp	Non-case mix component	Total rate
RUX	2.67	1.87	443.01	$233.71		$84.67	$761.39
RUL	2.57	1.87	426.41	233.71		84.67	744.79
RVX	2.61	1.28	433.05	159.97		84.67	677.69
RVL	2.19	1.28	363.36	159.97		84.67	608.00
RHX	2.55	0.85	423.10	106.23		84.67	614.00
RHL	2.15	0.85	356.73	106.23		84.67	547.63
RMX	2.47	0.55	409.82	68.74		84.67	563.23
RML	2.19	0.55	363.36	68.74		84.67	516.77
RLX	2.26	0.28	374.98	34.99		84.67	494.64
RUC	1.56	1.87	258.84	233.71		84.67	577.22

TABLE 4—RUG–IV CASE-MIX ADJUSTED FEDERAL RATES AND ASSOCIATED INDEXES—URBAN—Continued

RUG–IV Category	Nursing index	Therapy index	Nursing component	Therapy component	Non-case mix therapy comp	Non-case mix component	Total rate
RUB	1.56	1.87	258.84	233.71		84.67	577.22
RUA	0.99	1.87	164.26	233.71		84.67	482.64
RVC	1.51	1.28	250.54	159.97		84.67	495.18
RVB	1.11	1.28	184.17	159.97		84.67	428.81
RVA	1.10	1.28	182.51	159.97		84.67	427.15
RHC	1.45	0.85	240.58	106.23		84.67	431.48
RHB	1.19	0.85	197.44	106.23		84.67	388.34
RHA	0.91	0.85	150.99	106.23		84.67	341.89
RMC	1.36	0.55	225.65	68.74		84.67	379.06
RMB	1.22	0.55	202.42	68.74		84.67	355.83
RMA	0.84	0.55	139.37	68.74		84.67	292.78
RLB	1.50	0.28	248.88	34.99		84.67	368.54
RLA	0.71	0.28	117.80	34.99		84.67	237.46
ES3	3.58		593.99		$16.46	84.67	695.12
ES2	2.67		443.01		16.46	84.67	544.14
ES1	2.32		384.93		16.46	84.67	486.06
HE2	2.22		368.34		16.46	84.67	469.47
HE1	1.74		288.70		16.46	84.67	389.83
HD2	2.04		338.48		16.46	84.67	439.61
HD1	1.60		265.47		16.46	84.67	366.60
HC2	1.89		313.59		16.46	84.67	414.72
HC1	1.48		245.56		16.46	84.67	346.69
HB2	1.86		308.61		16.46	84.67	409.74
HB1	1.46		242.24		16.46	84.67	343.37
LE2	1.96		325.20		16.46	84.67	426.33
LE1	1.54		255.52		16.46	84.67	356.65
LD2	1.86		308.61		16.46	84.67	409.74
LD1	1.46		242.24		16.46	84.67	343.37
LC2	1.56		258.84		16.46	84.67	359.97
LC1	1.22		202.42		16.46	84.67	303.55
LB2	1.45		240.58		16.46	84.67	341.71
LB1	1.14		189.15		16.46	84.67	290.28
CE2	1.68		278.75		16.46	84.67	379.88
CE1	1.50		248.88		16.46	84.67	350.01
CD2	1.56		258.84		16.46	84.67	359.97
CD1	1.38		228.97		16.46	84.67	330.10
CC2	1.29		214.04		16.46	84.67	315.17
CC1	1.15		190.81		16.46	84.67	291.94
CB2	1.15		190.81		16.46	84.67	291.94
CB1	1.02		169.24		16.46	84.67	270.37
CA2	0.88		146.01		16.46	84.67	247.14
CA1	0.78		129.42		16.46	84.67	230.55
BB2	0.97		160.94		16.46	84.67	262.07
BB1	0.90		149.33		16.46	84.67	250.46
BA2	0.70		116.14		16.46	84.67	217.27
BA1	0.64		106.19		16.46	84.67	207.32
PE2	1.50		248.88		16.46	84.67	350.01
PE1	1.40		232.29		16.46	84.67	333.42
PD2	1.38		228.97		16.46	84.67	330.10
PD1	1.28		212.38		16.46	84.67	313.51
PC2	1.10		182.51		16.46	84.67	283.64
PC1	1.02		169.24		16.46	84.67	270.37
PB2	0.84		139.37		16.46	84.67	240.50
PB1	0.78		129.42		16.46	84.67	230.55
PA2	0.59		97.89		16.46	84.67	199.02
PA1	0.54		89.60		16.46	84.67	190.73

TABLE 5—RUG—IV CASE-MIX ADJUSTED FEDERAL RATES AND ASSOCIATED INDEXES—RURAL

RUG–IV Category	Nursing index	Therapy index	Nursing component	Therapy component	Non-case mix therapy comp	Non-case mix component	Total rate
RUX	2.67	1.87	$423.25	$269.49		$86.25	$778.99
RUL	2.57	1.87	407.40	269.49		86.25	763.14
RVX	2.61	1.28	413.74	184.46		86.25	684.45
RVL	2.19	1.28	347.16	184.46		86.25	617.87
RHX	2.55	0.85	404.23	122.49		86.25	612.97
RHL	2.15	0.85	340.82	122.49		86.25	549.56
RMX	2.47	0.55	391.54	79.26		86.25	557.05
RML	2.19	0.55	347.16	79.26		86.25	512.67

TABLE 5—RUG—IV CASE-MIX ADJUSTED FEDERAL RATES AND ASSOCIATED INDEXES—RURAL—Continued

RUG–IV Category	Nursing index	Therapy index	Nursing component	Therapy component	Non-case mix therapy comp	Non-case mix component	Total rate
RLX	2.26	0.28	358.26	40.35		86.25	484.86
RUC	1.56	1.87	247.29	269.49		86.25	603.03
RUB	1.56	1.87	247.29	269.49		86.25	603.03
RUA	0.99	1.87	156.93	269.49		86.25	512.67
RVC	1.51	1.28	239.37	184.46		86.25	510.08
RVB	1.11	1.28	175.96	184.46		86.25	446.67
RVA	1.10	1.28	174.37	184.46		86.25	445.08
RHC	1.45	0.85	229.85	122.49		86.25	438.59
RHB	1.19	0.85	188.64	122.49		86.25	397.38
RHA	0.91	0.85	144.25	122.49		86.25	352.99
RMC	1.36	0.55	215.59	79.26		86.25	381.10
RMB	1.22	0.55	193.39	79.26		86.25	358.90
RMA	0.84	0.55	133.16	79.26		86.25	298.67
RLB	1.50	0.28	237.78	40.35		86.25	364.38
RLA	0.71	0.28	112.55	40.35		86.25	239.15
ES3	3.58		567.50		17.58	86.25	671.33
ES2	2.67		423.25		17.58	86.25	527.08
ES1	2.32		367.77		17.58	86.25	471.60
HE2	2.22		351.91		17.58	86.25	455.74
HE1	1.74		275.82		17.58	86.25	379.65
HD2	2.04		323.38		17.58	86.25	427.21
HD1	1.60		253.63		17.58	86.25	357.46
HC2	1.89		299.60		17.58	86.25	403.43
HC1	1.48		234.61		17.58	86.25	338.44
HB2	1.86		294.85		17.58	86.25	398.68
HB1	1.46		231.44		17.58	86.25	335.27
LE2	1.96		310.70		17.58	86.25	414.53
LE1	1.54		244.12		17.58	86.25	347.95
LD2	1.86		294.85		17.58	86.25	398.68
LD1	1.46		231.44		17.58	86.25	335.27
LC2	1.56		247.29		17.58	86.25	351.12
LC1	1.22		193.39		17.58	86.25	297.22
LB2	1.45		229.85		17.58	86.25	333.68
LB1	1.14		180.71		17.58	86.25	284.54
CE2	1.68		266.31		17.58	86.25	370.14
CE1	1.50		237.78		17.58	86.25	341.61
CD2	1.56		247.29		17.58	86.25	351.12
CD1	1.38		218.76		17.58	86.25	322.59
CC2	1.29		204.49		17.58	86.25	308.32
CC1	1.15		182.30		17.58	86.25	286.13
CB2	1.15		182.30		17.58	86.25	286.13
CB1	1.02		161.69		17.58	86.25	265.52
CA2	0.88		139.50		17.58	86.25	243.33
CA1	0.78		123.65		17.58	86.25	227.48
BB2	0.97		153.76		17.58	86.25	257.59
BB1	0.90		142.67		17.58	86.25	246.50
BA2	0.70		110.96		17.58	86.25	214.79
BA1	0.64		101.45		17.58	86.25	205.28
PE2	1.50		237.78		17.58	86.25	341.61
PE1	1.40		221.93		17.58	86.25	325.76
PD2	1.38		218.76		17.58	86.25	322.59
PD1	1.28		202.91		17.58	86.25	306.74
PC2	1.10		174.37		17.58	86.25	278.20
PC1	1.02		161.69		17.58	86.25	265.52
PB2	0.84		133.16		17.58	86.25	236.99
PB1	0.78		123.65		17.58	86.25	227.48
PA2	0.59		93.53		17.58	86.25	197.36
PA1	0.54		85.60		17.58	86.25	189.43

D. Wage Index Adjustment

Section 1888(e)(4)(G)(ii) of the Act requires that we adjust the federal rates to account for differences in area wage levels, using a wage index that the Secretary determines appropriate. Since the inception of the SNF PPS, we have used hospital inpatient wage data in developing a wage index to be applied to SNFs. We propose to continue this practice for FY 2014, as we continue to believe that in the absence of SNF-specific wage data, using the hospital inpatient wage index is appropriate and reasonable for the SNF PPS. As explained in the update notice for FY 2005 (69 FR 45786), the SNF PPS does not use the hospital area wage index's occupational mix adjustment, as this adjustment serves specifically to define the occupational categories more clearly in a hospital setting; moreover, the collection of the occupational wage data also excludes any wage data related to SNFs. Therefore, we believe that using the updated wage data exclusive of the

occupational mix adjustment continues to be appropriate for SNF payments. For FY 2014, the updated wage data are for hospital cost reporting periods beginning on or after October 1, 2009 and before October 1, 2010 (FY 2010 cost report data).

Finally, we propose to continue to use the same methodology discussed in the SNF PPS final rule for FY 2008 (72 FR 43423) to address those geographic areas in which there are no hospitals, and thus, no hospital wage index data on which to base the calculation of the FY 2014 SNF PPS wage index. For rural geographic areas that do not have hospitals, and therefore, lack hospital wage data on which to base an area wage adjustment, we would use the average wage index from all contiguous Core-Based Statistical Areas (CBSAs) as a reasonable proxy. For FY 2014, there are no rural geographic areas that do not have hospitals, and thus, this methodology would not be applied. For rural Puerto Rico, we would not apply this methodology due to the distinct economic circumstances that exist there (for example, due to the close proximity to one another of almost all of Puerto Rico's various urban and non-urban areas, this methodology would produce a wage index for rural Puerto Rico that is inappropriately higher than that in half of its urban areas); instead, we would continue to use the most recent wage index previously available for that area. For urban areas without specific hospital wage index data, we would use the average wage indexes of all of the urban areas within the state to serve as a reasonable proxy for the wage index of that urban CBSA. For FY 2014, the only urban area without wage index data available is CBSA 25980, Hinesville-Fort Stewart, GA.

In addition, we note that section 315 of the Medicare, Medicaid, and SCHIP Benefits Improvement and Protection Act of 2000 (BIPA) (Pub. L. 106–554, enacted on December 21, 2000) authorized us to establish a geographic reclassification procedure that is specific to SNFs, but only after collecting the data necessary to establish a SNF wage index that is based on wage data from nursing homes. However, to date, this has proven to be unfeasible due to the volatility of existing SNF wage data and the significant amount of resources that would be required to improve the quality of that data.

Once calculated, we would apply the wage index adjustment to the labor-related portion of the federal rate. Each year, we calculate a revised labor-related share, based on the relative importance of labor-related cost categories (that is, those cost categories that are sensitive to local area wage costs) in the input price index. For the FY 2014 SNF PPS update, we are proposing to revise the labor-related share to reflect the relative importance of the revised FY 2010-based SNF market basket cost weights for the following cost categories (as discussed further in section V.A. of this proposed rule): wages and salaries; employee benefits; contract labor; the labor-related portion of nonmedical professional fees; administrative and facilities support services; all other: labor-related services (previously referred to in the FY 2004-based SNF market basket as labor-intensive); and a proportion of capital-related expenses.

We calculate the labor-related relative importance from the SNF market basket, and it approximates the labor-related portion of the total costs after taking into account historical and projected price changes between the base year and FY 2014. The price proxies that move the different cost categories in the market basket do not necessarily change at the same rate, and the relative importance captures these changes. Accordingly, the relative importance figure more closely reflects the cost share weights for FY 2014 than the base year weights from the SNF market basket.

We calculate the labor-related relative importance for FY 2014 in four steps. First, we compute the FY 2014 price index level for the total market basket and each cost category of the market basket. Second, we calculate a ratio for each cost category by dividing the FY 2014 price index level for that cost category by the total market basket price index level. Third, we determine the FY 2014 relative importance for each cost category by multiplying this ratio by the base year (FY 2010) weight. Finally, we add the FY 2014 relative importance for each of the labor-related cost categories (wages and salaries, employee benefits, the labor-related portion of non-medical professional fees, administrative and facilities support services, all other: labor-related services (previously referred to in the FY 2004-based SNF market basket as labor-intensive services), and a portion of capital-related expenses) to produce the FY 2014 labor-related relative importance. Tables 6 and 7 show the RUG–IV case-mix adjusted federal rates by labor-related and non-labor-related components. In section V. of this proposed rule, Table 17 provides the FY 2014 labor-related share components based on the revised and rebased FY 2010-based SNF market basket.

TABLE 6—RUG–IV CASE-MIX ADJUSTED FEDERAL RATES FOR URBAN SNFS BY LABOR AND NON-LABOR COMPONENT

RUG–IV Category	Total rate	Labor portion	Non-labor portion
RUX	761.39	$531.18	$230.21
RUL	744.79	519.60	225.19
RVX	677.69	472.78	204.91
RVL	608.00	424.17	183.83
RHX	614.00	428.35	185.65
RHL	547.63	382.05	165.58
RMX	563.23	392.93	170.30
RML	516.77	360.52	156.25
RLX	494.64	345.08	149.56
RUC	577.22	402.69	174.53
RUB	577.22	402.69	174.53
RUA	482.64	336.71	145.93
RVC	495.18	345.46	149.72
RVB	428.81	299.16	129.65
RVA	427.15	298.00	129.15
RHC	431.48	301.02	130.46
RHB	388.34	270.92	117.42
RHA	341.89	238.52	103.37
RMC	379.06	264.45	114.61
RMB	355.83	248.24	107.59
RMA	292.78	204.26	88.52
RLB	368.54	257.11	111.43
RLA	237.46	165.66	71.80
ES3	695.12	484.94	210.18
ES2	544.14	379.61	164.53
ES1	486.06	339.09	146.97
HE2	469.47	327.52	141.95
HE1	389.83	271.96	117.87
HD2	439.61	306.69	132.92
HD1	366.60	255.75	110.85
HC2	414.72	289.33	125.39
HC1	346.69	241.86	104.83
HB2	409.74	285.85	123.89
HB1	343.37	239.55	103.82
LE2	426.33	297.42	128.91
LE1	356.65	248.81	107.84
LD2	409.74	285.85	123.89
LD1	343.37	239.55	103.82
LC2	359.97	251.13	108.84
LC1	303.55	211.77	91.78
LB2	341.71	238.39	103.32
LB1	290.28	202.51	87.77
CE2	379.88	265.02	114.86
CE1	350.01	244.18	105.83
CD2	359.97	251.13	108.84
CD1	330.10	230.29	99.81
CC2	315.17	219.88	95.29
CC1	291.94	203.67	88.27
CB2	291.94	203.67	88.27
CB1	270.37	188.62	81.75
CA2	247.14	172.41	74.73
CA1	230.55	160.84	69.71
BB2	262.07	182.83	79.24
BB1	250.46	174.73	75.73
BA2	217.27	151.58	65.69
BA1	207.32	144.63	62.69
PE2	350.01	244.18	105.83
PE1	333.42	232.61	100.81
PD2	330.10	230.29	99.81
PD1	313.51	218.72	94.79
PC2	283.64	197.88	85.76
PC1	270.37	188.62	81.75
PB2	240.50	167.78	72.72
PB1	230.55	160.84	69.71
PA2	199.02	138.84	60.18
PA1	190.73	133.06	57.67

TABLE 7—RUG–IV CASE-MIX ADJUSTED FEDERAL RATES FOR RURAL SNFS BY LABOR AND NON-LABOR COMPONENT

RUG–IV Category	Total rate	Labor portion	Non-labor portion
RUX	778.99	$543.45	$235.54
RUL	763.14	532.40	230.74
RVX	684.45	477.50	206.95
RVL	617.87	431.05	186.82
RHX	612.97	427.63	185.34
RHL	549.56	383.40	166.16
RMX	557.05	388.62	168.43
RML	512.67	357.66	155.01
RLX	484.86	338.26	146.60
RUC	603.03	420.70	182.33
RUB	603.03	420.70	182.33
RUA	512.67	357.66	155.01
RVC	510.08	355.85	154.23
RVB	446.67	311.61	135.06
RVA	445.08	310.51	134.57
RHC	438.59	305.98	132.61
RHB	397.38	277.23	120.15
RHA	352.99	246.26	106.73
RMC	381.10	265.87	115.23
RMB	358.90	250.38	108.52
RMA	298.67	208.36	90.31
RLB	364.38	254.21	110.17
RLA	239.15	166.84	72.31
ES3	671.33	468.35	202.98
ES2	527.08	367.71	159.37
ES1	471.60	329.01	142.59
HE2	455.74	317.94	137.80
HE1	379.65	264.86	114.79
HD2	427.21	298.04	129.17
HD1	357.46	249.38	108.08
HC2	403.43	281.45	121.98
HC1	338.44	236.11	102.33
HB2	398.68	278.14	120.54
HB1	335.27	233.90	101.37
LE2	414.53	289.19	125.34
LE1	347.95	242.74	105.21
LD2	398.68	278.14	120.54
LD1	335.27	233.90	101.37
LC2	351.12	244.96	106.16
LC1	297.22	207.35	89.87
LB2	333.68	232.79	100.89
LB1	284.54	198.51	86.03
CE2	370.14	258.22	111.92
CE1	341.61	238.32	103.29
CD2	351.12	244.96	106.16
CD1	322.59	225.05	97.54
CC2	308.32	215.10	93.22
CC1	286.13	199.62	86.51
CB2	286.13	199.62	86.51
CB1	265.52	185.24	80.28
CA2	243.33	169.76	73.57
CA1	227.48	158.70	68.78
BB2	257.59	179.71	77.88
BB1	246.50	171.97	74.53
BA2	214.79	149.85	64.94
BA1	205.28	143.21	62.07
PE2	341.61	238.32	103.29
PE1	325.76	227.26	98.50
PD2	322.59	225.05	97.54
PD1	306.74	213.99	92.75
PC2	278.20	194.08	84.12
PC1	265.52	185.24	80.28
PB2	236.99	165.33	71.66
PB1	227.48	158.70	68.78
PA2	197.36	137.69	59.67
PA1	189.43	132.15	57.28

Section 1888(e)(4)(G)(ii) of the Act also requires that we apply this wage index in a manner that does not result in aggregate payments under the SNF PPS that are greater or less than would otherwise be made if the wage adjustment had not been made. For FY 2014 (federal rates effective October 1, 2013), we apply an adjustment to fulfill the budget neutrality requirement. We meet this requirement by multiplying each of the components of the unadjusted federal rates by a budget neutrality factor equal to the ratio of the weighted average wage adjustment factor for FY 2013 to the weighted average wage adjustment factor for FY 2014. For this calculation, we use the same 2012 claims utilization data for both the numerator and denominator of this ratio. We define the wage adjustment factor used in this calculation as the labor share of the rate component multiplied by the wage index plus the non-labor share of the rate component. The budget neutrality factor for FY 2014 is 1.0003. The wage index applicable to FY 2014 is set forth in Tables A and B, which appear in the Addendum of this proposed rule, and is also available on the CMS Web site at *http://cms.gov/Medicare/Medicare-Fee-for-Service-Payment/SNFPPS/WageIndex.html.*

In the SNF PPS final rule for FY 2006 (70 FR 45026, August 4, 2005), we adopted the changes discussed in the OMB Bulletin No. 03–04 (June 6, 2003), available online at *http://www.whitehouse.gov/omb/bulletins/b03–04.html,* which announced revised definitions for metropolitan statistical areas (MSAs), and the creation of micropolitan statistical areas and combined statistical areas. In addition, OMB published subsequent bulletins regarding CBSA changes, including changes in CBSA numbers and titles. We indicated in the FY 2008 SNF PPS final rule (72 FR 43423), that all subsequent SNF PPS rules and notices are considered to incorporate the CBSA changes published in the most recent OMB bulletin that applies to the hospital wage data used to determine the current SNF PPS wage index. The OMB bulletins are available online at *http://www.whitehouse.gov/omb/bulletins/index.html.*

In adopting the CBSA geographic designations, we provided for a 1-year transition in FY 2006 with a blended wage index for all providers. For FY 2006, the wage index for each provider consisted of a blend of 50 percent of the FY 2006 MSA-based wage index and 50 percent of the FY 2006 CBSA-based wage index (both using FY 2002 hospital data). We referred to the blended wage index as the FY 2006 SNF PPS transition wage index. As discussed in the SNF PPS final rule for FY 2006 (70 FR 45041), subsequent to the expiration of this 1-year transition on September 30, 2006, we used the full CBSA-based wage index values, as now presented in Tables A and B in the Addendum of this proposed rule.

On February 28, 2013, OMB issued OMB Bulletin No. 13–01, announcing revisions to the delineation of Metropolitan Statistical Areas, Micropolitan Statistical Areas, and Combined Statistical Areas, and guidance on uses of the delineation of these areas. A copy of this bulletin may be obtained at *http://www.whitehouse.gov/sites/default/files/omb/bulletins/2013/b-13–01.pdf.* This bulletin states that it provides the delineations of all Metropolitan Statistical Areas, Metropolitan Divisions, Micropolitan Statistical Areas, Combined Statistical Areas, and New England City and Town Areas in the United States and Puerto Rico based on the standards published in the June 28, 2010 **Federal Register** (75 FR 37246–37252) and Census Bureau data.

While the revisions OMB published on February 28, 2013 are not as sweeping as the changes made when we adopted the CBSA geographic designations for FY 2006, the February 28, 2013 bulletin does contain a number of significant changes. For example, there are new CBSAs, urban counties that become rural, rural counties that become urban, and existing CBSAs that are being split apart.

The changes made by the bulletin and their ramifications must be extensively reviewed and assessed by CMS before using them for the SNF PPS wage index. Because the bulletin was not issued until February 28, 2013, we were unable to undertake such a lengthy process before publication of this FY 2014 proposed rule. By the time the bulletin was issued, the FY 2014 SNF PPS proposed rule was in the advanced stages of development. We had already developed the FY 2014 proposed wage index based on the previous OMB definitions. To allow for sufficient time to assess the new changes and their ramifications, we intend to propose changes to the wage index based on the newest CBSA changes in the FY 2015 SNF PPS proposed rule. Thus, we would continue to use the previous OMB definitions (that is, those used for the FY 2013 SNF PPS update notice) for the FY 2014 SNF PPS wage index.

E. Adjusted Rate Computation Example

Using the hypothetical SNF XYZ described below, Table 8 shows the

adjustments made to the federal per diem rates to compute the provider's actual per diem PPS payment under the described scenario. We derive the Labor and Non-labor columns from Table 6. As illustrated in Table 8, SNF XYZ's total PPS payment would equal $41,917.80.

TABLE 8—ADJUSTED RATE COMPUTATION EXAMPLE, SNF XYZ: LOCATED IN CEDAR RAPIDS, IA (URBAN CBSA 16300), WAGE INDEX: 0.9001

RUG–IV group	Labor	Wage index	Adjusted labor	Non-labor	Adjusted rate	Percent adjustment	Medicare days	Payment
RVX	$472.78	0.9001	$425.55	$204.91	$630.46	$630.46	14	$8,826.44
ES2	379.61	0.9001	341.69	164.53	506.22	506.22	30	15,186.60
RHA	238.52	0.9001	214.69	103.37	318.06	318.06	16	5,088.96
CC2*	219.88	0.9001	197.91	95.29	293.20	668.50	10	6,685.00
BA2	151.58	0.9001	136.44	65.69	202.13	202.13	30	6,063.90
							100	$41,850.90

* Reflects a 128 percent adjustment from section 511 of the MMA.

IV. Additional Aspects of the SNF PPS

A. SNF Level of Care—Administrative Presumption

The establishment of the SNF PPS did not change Medicare's fundamental requirements for SNF coverage. However, because the case-mix classification is based, in part, on the beneficiary's need for skilled nursing care and therapy, we have attempted, where possible, to coordinate claims review procedures with the existing resident assessment process and case-mix classification system discussed in section III.C of this proposed rule. This approach includes an administrative presumption that utilizes a beneficiary's initial classification in one of the upper 52 RUGs of the 66-group RUG–IV case-mix classification system to assist in making certain SNF level of care determinations.

In accordance with section 1888(e)(4)(H)(ii) of the Act and the regulations at § 413.345, we include in each update of the federal payment rates in the **Federal Register** the designation of those specific RUGs under the classification system that represent the required SNF level of care, as provided in § 409.30. As set forth in the FY 2011 SNF PPS update notice (75 FR 42910), this designation reflects an administrative presumption under the 66-group RUG–IV system that beneficiaries who are correctly assigned to one of the upper 52 RUG–IV groups on the initial 5-day, Medicare-required assessment are automatically classified as meeting the SNF level of care definition up to and including the assessment reference date on the 5-day Medicare-required assessment.

A beneficiary assigned to any of the lower 14 RUG–IV groups is not automatically classified as either meeting or not meeting the definition, but instead receives an individual level of care determination using the existing administrative criteria. This presumption recognizes the strong likelihood that beneficiaries assigned to one of the upper 52 RUG–IV groups during the immediate post-hospital period require a covered level of care, which would be less likely for those beneficiaries assigned to one of the lower 14 RUG–IV groups.

In the July 30, 1999 final rule (64 FR 41670), we indicated that we would announce any changes to the guidelines for Medicare level of care determinations related to modifications in the case-mix classification structure. In this proposed rule, we would continue to designate the upper 52 RUG–IV groups for purposes of this administrative presumption, consisting of all groups encompassed by the following RUG–IV categories:

- Rehabilitation plus Extensive Services;
- Ultra High Rehabilitation;
- Very High Rehabilitation;
- High Rehabilitation;
- Medium Rehabilitation;
- Low Rehabilitation;
- Extensive Services;
- Special Care High;
- Special Care Low; and,
- Clinically Complex.

However, we note that this administrative presumption policy does not supersede the SNF's responsibility to ensure that its decisions relating to level of care are appropriate and timely, including a review to confirm that the services prompting the beneficiary's assignment to one of the upper 52 RUG–IV groups (which, in turn, serves to trigger the administrative presumption) are themselves medically necessary. As we explained in the FY 2000 SNF PPS final rule (64 FR 41667), the administrative presumption:

> ''. . . is itself rebuttable in those individual cases in which the services actually received by the resident do not meet the basic statutory criterion of being reasonable and necessary to diagnose or treat a beneficiary's condition (according to section 1862(a)(1) of the Act). Accordingly, the presumption would not apply, for example, in those situations in which a resident's assignment to one of the upper . . . groups is itself based on the receipt of services that are subsequently determined to be not reasonable and necessary.''

Moreover, we want to stress the importance of careful monitoring for changes in each patient's condition to determine the continuing need for Part A SNF benefits after the assessment reference date of the 5-day assessment.

B. Consolidated Billing

Sections 1842(b)(6)(E) and 1862(a)(18) of the Act (as added by section 4432(b) of the BBA) require a SNF to submit consolidated Medicare bills to its fiscal intermediary or Medicare Administrative Contractor for almost all of the services that its residents receive during the course of a covered Part A stay. In addition, section 1862(a)(18) places the responsibility with the SNF for billing Medicare for physical therapy, occupational therapy, and speech-language pathology services that the resident receives during a noncovered stay. Section 1888(e)(2)(A) of the Act excludes a small list of services from the consolidated billing provision (primarily those services furnished by physicians and certain other types of practitioners), which remain separately billable under Part B when furnished to a SNF's Part A resident. These excluded service categories are discussed in greater detail in section V.B.2. of the May 12, 1998 interim final rule (63 FR 26295 through 26297).

We note that section 103 of the Medicare, Medicaid, and SCHIP Balanced Budget Refinement Act of 1999 (BBRA) (Pub. L. 106–113, enacted on November 29, 1999) amended this provision (section 1888(e)(2)(A) of the

Act) by further excluding a number of individual ''high-cost, low-probability'' services, identified by Healthcare Common Procedure Coding System (HCPCS) codes, within several broader categories (chemotherapy items, chemotherapy administration services, radioisotope services, and customized prosthetic devices) that otherwise remained subject to the provision. We discuss this BBRA amendment in greater detail in the SNF PPS proposed and final rules for FY 2001 (65 FR 19231 through 19232, April 10, 2000, and 65 FR 46790 through 46795, July 31, 2000), as well as in Program Memorandum AB–00–18 (Change Request #1070), issued March 2000, which is available online at *www.cms.gov/transmittals/downloads/ab001860.pdf.*

As explained in the FY 2001 proposed rule (65 FR 19232), the amendments enacted in section 103 of the BBRA not only identified for exclusion from this provision a number of particular service codes within four specified categories (that is, chemotherapy items, chemotherapy administration services, radioisotope services, and customized prosthetic devices), but also gave the Secretary ''. . . the authority to designate additional, individual services for exclusion within each of the specified service categories.'' In the proposed rule for FY 2001, we also noted that the BBRA Conference report (H.R. Rep. No. 106–479 at 854 (1999) (Conf. Rep.)) characterizes the individual services that this legislation targets for exclusion as ''. . . high-cost, low probability events that could have devastating financial impacts because their costs far exceed the payment [SNFs] receive under the prospective payment system. . . .'' According to the conferees, section 103(a) of the BBRA ''is an attempt to exclude from the PPS certain services and costly items that are provided infrequently in SNFs. . . .'' By contrast, we noted that the Congress declined to designate for exclusion any of the remaining services within those four categories (thus, leaving all of those services subject to SNF consolidated billing), because they are relatively inexpensive and are furnished routinely in SNFs.

As we further explained in the final rule for FY 2001 (65 FR 46790), and as our longstanding policy, any additional service codes that we might designate for exclusion under our discretionary authority must meet the same statutory criteria used in identifying the original codes excluded from consolidated billing under section 103(a) of the BBRA: they must fall within one of the four service categories specified in the BBRA, and they also must meet the same standards of high cost and low probability in the SNF setting, as discussed in the BBRA Conference report. Accordingly, we characterized this statutory authority to identify additional service codes for exclusion ''. . . as essentially affording the flexibility to revise the list of excluded codes in response to changes of major significance that may occur over time (for example, the development of new medical technologies or other advances in the state of medical practice)'' (65 FR 46791). In this proposed rule, we specifically invite public comments identifying HCPCS codes in any of these four service categories (chemotherapy items, chemotherapy administration services, radioisotope services, and customized prosthetic devices) representing recent medical advances that might meet our criteria for exclusion from SNF consolidated billing. We may consider excluding a particular service if it meets our criteria for exclusion as specified above. Commenters should identify in their comments the specific HCPCS code that is associated with the service in question, as well as their rationale for requesting that the identified HCPCS code(s) be excluded.

We note that the original BBRA amendment (as well as the implementing regulations) identified a set of excluded services by means of specifying HCPCS codes that were in effect as of a particular date (in that case, as of July 1, 1999). Identifying the excluded services in this manner made it possible for us to utilize program issuances as the vehicle for accomplishing routine updates of the excluded codes, to reflect any minor revisions that might subsequently occur in the coding system itself (for example, the assignment of a different code number to the same service). Accordingly, in the event that we identify through the current rulemaking cycle any new services that would actually represent a substantive change in the scope of the exclusions from SNF consolidated billing, we would identify these additional excluded services by means of the HCPCS codes that are in effect as of a specific date (in this case, as of October 1, 2013). By making any new exclusions in this manner, we could similarly accomplish routine future updates of these additional codes through the issuance of program instructions.

C. Payment for SNF-Level Swing-Bed Services

Section 1883 of the Act permits certain small, rural hospitals to enter into a Medicare swing-bed agreement, under which the hospital can use its beds to provide either acute- or SNF-level care, as needed. For critical access hospitals (CAHs), Part A pays on a reasonable cost basis for SNF-level services furnished under a swing-bed agreement. However, in accordance with section 1888(e)(7) of the Act, these services furnished by non-CAH rural hospitals are paid under the SNF PPS, effective with cost reporting periods beginning on or after July 1, 2002. As explained in the FY 2002 final rule (66 FR 39562), this effective date is consistent with the statutory provision to integrate swing-bed rural hospitals into the SNF PPS by the end of the transition period, June 30, 2002.

Accordingly, all non-CAH swing-bed rural hospitals have now come under the SNF PPS. Therefore, all rates and wage indexes outlined in earlier sections of this proposed rule for the SNF PPS also apply to all non-CAH swing-bed rural hospitals. A complete discussion of assessment schedules, the MDS, and the transmission software (RAVEN–SB for Swing Beds) appears in the FY 2002 final rule (66 FR 39562) and in the FY 2010 final rule (74 FR 40288). As finalized in the FY 2010 SNF PPS final rule (74 FR 40356–57), effective October 1, 2010, non-CAH swing-bed rural hospitals are required to complete an MDS 3.0 swing-bed assessment which is limited to the required demographic, payment, and quality items. The latest changes in the MDS for swing-bed rural hospitals appear on the SNF PPS Web site at *http://www.cms.gov/Medicare/Medicare-Fee-for-Service-Payment/SNFPPS/index.html.*

V. Other Issues

A. Revising and Rebasing the SNF Market Basket Index

1. Background

Section 1888(e)(5)(A) of the Act requires the Secretary to establish a market basket index that reflects the changes over time in the prices of an appropriate mix of goods and services included in the SNF PPS. Effective for cost reporting periods beginning on or after July 1, 1998, we revised and rebased our 1977 routine costs input price index and adopted a total expenses SNF input price index using FY 1992 as the base year. In the FY 2002 SNF PPS final rule (66 FR 39582), we rebased and revised the market basket to a base year of FY 1997. We last rebased and revised the market basket to a base year of FY 2004 in the FY 2008 SNF PPS final rule (72 FR 43425). In this FY 2014 SNF PPS proposed rule, we are

proposing to revise and rebase the SNF market basket to a base year of FY 2010.

The term ''market basket'' refers to the mix of goods and services needed to produce SNF care, and is also commonly used to denote the input price index that includes both weights (mix of goods and services) and price factors. The term ''market basket'' and ''market basket index'' used in this proposed rule refers to the SNF input price index.

The proposed FY 2010-based SNF market basket represents routine costs, costs of ancillary services, and capital-related costs. The percentage change in the market basket reflects the average change in the price of a fixed set of goods and services purchased by SNFs to furnish all services. For further background information, see the May 12, 1998 interim final rule with comment period (63 FR 26289), the FY 2002 final rule (66 FR 39582), and the FY 2008 final rule (72 FR 43425).

For purposes of the SNF PPS, the SNF market basket is a fixed-weight (Laspeyres-type) price index. A Laspeyres-type index compares the cost of purchasing a specified mix of goods and services in a selected base period to the cost of purchasing that same group of goods and services at current prices.

We construct the market basket in three steps. The first step is to select a base period and estimate total base period expenditure shares for mutually exclusive and exhaustive spending categories. We use total costs for routine services, ancillary services, and capital. These shares are called ''cost'' or ''expenditure'' weights. The second step is to match each expenditure category to a price/wage variable, called a price proxy. We draw these price proxy variables from publicly available statistical series published on a consistent schedule, preferably at least quarterly. The final step involves multiplying the price level for each spending category by the cost weight for that category. The sum of these products (that is, weights multiplied by proxy index levels) for all cost categories yields the composite index level of the market basket for a given quarter or year. Repeating the third step for other quarters and years produces a time series of market basket index levels, from which we can calculate rates of growth.

The market basket represents a fixed-weight index because it answers the question of how much more or less it would cost, at a later time, to purchase the same mix of goods and services that was purchased in the base period. The effects on total expenditures resulting from changes in the quantity or mix of goods and services purchased subsequent or prior to the base period are, by design, not considered.

Consistent with our discussion in the May 12, 1998 interim final rule with comment period (63 FR 26252), the FY 2002 final rule (66 FR 39582), and the FY 2008 proposed rule (72 FR 25541), and as further discussed below, to implement section 1888(e)(5)(A) of the Act we propose to revise and rebase the market basket so the cost weights and price proxies reflect the mix of goods and services that underlie Medicare allowable SNF costs (routine, ancillary, and capital-related) for FY 2010.

2. Revising and Rebasing the Skilled Nursing Facility Market Basket

The terms ''rebasing'' and ''revising,'' while often used interchangeably, actually denote different activities. Rebasing means shifting the base year for the structure of costs of the input price index (for example, for this proposed rule, we propose to shift the base year cost structure from FY 2004 to FY 2010). Revising means changing data sources, cost categories, price proxies, and/or methodology used in developing the input price index.

We are proposing both to rebase and revise the SNF market basket to reflect FY 2010 Medicare allowable total cost data (routine, ancillary, and capital-related). Medicare allowable costs are costs that are eligible for inclusion under the SNF PPS payments. For example, the SNF market basket excludes home health aide costs as these costs would be reimbursed under the Home Health PPS. We last rebased and revised the SNF market basket in the FY 2008 PPS final rule (72 FR 43425), reflecting data from FY 2004 Medicare allowable total costs.

We selected FY 2010 as the new base year because 2010 is the most recent year for which relatively complete Medicare cost report (MCR) data are available. In developing the proposed market basket, we reviewed SNF expenditure data from SNF MCRs (CMS Form 2540–96) for FY 2010 for each freestanding SNF that reported Medicare expenses and payments. The FY 2010 cost reports are those with cost reporting periods beginning after September 30, 2009, and before October 1, 2010. We propose to maintain our policy of using data from freestanding SNFs because freestanding SNF data reflect the actual cost structure faced by the SNF itself. In contrast, expense data for a hospital-based SNF reflect the allocation of overhead over the entire institution. Due to this method of allocation, total expenses will be correct, but the individual components' expenses may be skewed.

We developed cost category weights for the proposed FY 2010-based SNF market basket in two stages. First, we derived base weights for seven major categories (wages and salaries, employee benefits, contract labor, pharmaceuticals, professional liability insurance, capital-related, and a residual ''all other'') from the SNF MCRs. Second, we are proposing to divide the residual ''all other'' cost category (21.534 percent) into subcategories, using U.S. Department of Commerce Bureau of Economic Analysis' (BEA) 2002 Benchmark Input-Output (I–O) tables for the nursing home industry aged forward using price changes. The methodology we propose to use to age the data forward involves applying the annual price changes from the respective price proxies to the appropriate cost categories. We repeat this practice for each year. We then apply the resulting 2010 distributions to the aggregate 2010 ''all other'' cost weight of 21.534 percent to yield the detailed 2010 all other cost weights. This is similar to the methodology we used to revise and rebase the SNF market basket to reflect FY 2004 data in the FY 2008 SNF final rule.

The BEA Benchmark I–O data are generally scheduled for publication every 5 years, with the most recent data available being 2002. The 2007 BEA Benchmark I–O data are expected to be released in the summer of 2013. We are proposing that if more recent BEA Benchmark I–O data for 2007 are released between the proposed and final rule with sufficient time to incorporate such data into the final rule that we would incorporate these data, as appropriate, into the FY 2010-based SNF PPS market basket for the final rule, so that the SNF market basket reflects the most recent BEA data available. We note that the FY 2004-based SNF market basket used the 1997 BEA Benchmark I–O data to disaggregate the ''all other'' (residual) cost category—the data available at the time of the rebasing. The 2002 BEA Benchmark I–O data (and the forthcoming 2007 BEA Benchmark I–O data) are updates of the 1997 BEA Benchmark I–O data.

For this SNF market basket revision and rebasing, we are proposing to include a total of 29 detailed cost categories for the proposed FY 2010-based SNF market basket, which is six more cost categories than the FY 2004-based SNF market basket. We are proposing to include five new cost categories in the proposed FY 2010-based SNF market basket: (1) Medical

Instruments and Supplies; (2) Apparel; (3) Machinery and Equipment; (4) Administrative and Facilities Support Services; and (5) Financial Services. Having separate categories for these costs enables them to be proxied more precisely. We are also proposing to divide the Nonmedical Professional Fees cost category into Nonmedical Professional Fees: Labor-Related and Nonmedical Professional Fees: Nonlabor-Related. In addition, we are proposing to revise our labels for the Labor-Intensive Services and Nonlabor-Intensive Services cost categories to All Other: Labor-Related Services and All Other: Nonlabor-Related Services, respectively. A more thorough discussion of our proposals is provided below.

The capital-related portion of the FY 2010-based SNF market basket employs the same overall methodology used to develop the capital-related portion of the FY 1997-based SNF market basket, described in the FY 2002 SNF PPS final rule (66 FR 39582) and the FY 2004-based SNF market basket, described in the FY 2008 SNF PPS final rule (72 FR 43425). It is a similar methodology as is used for the inpatient hospital capital input price index described in the FY 1997 Hospital IPPS proposed rule (61 FR 27466), the FY 1997 Hospital IPPS final rule (61 FR 46196), the FY 2006 Hospital IPPS final rule (70 FR 47407), and the FY 2010 Hospital IPPS final rule (74 FR 43857). The strength of this methodology is that it reflects the vintage nature of capital, which represents the acquisition and use of capital over time. We explain this methodology in more detail below.

Table 9 presents the FY 2010-based and FY 2004-based SNF market basket major cost weights. Following the table, we describe the sources of the major category weights and their subcategories in the FY 2010-based SNF market basket.

TABLE 9—FY 2010-BASED SNF MARKET BASKET MAJOR COST WEIGHTS

Cost Category	Proposed FY 2010-based SNF market basket	FY 2004-based SNF market basket
Wages and Salaries	46.057	48.105
Employee Benefits	10.491	10.699
Contract Labor	5.545	3.951
Pharmaceuticals	7.872	7.894
Professional Liability Insurance	1.141	1.717
Capital-related Expenses	7.360	7.207
All Other (residual)	21.534	20.427

• *Wages and Salaries:* We derived the wages and salaries cost category using the FY 2010 SNF MCRs. We determined the share using Medicare allowable wages and salaries from Worksheet S–3, part II and total expenses from Worksheet B, part I. Medicare allowable wages and salaries are equal to total wages and salaries minus: (1) Excluded salaries from worksheet S–3, part II; and (2) nursing facility and non-reimbursable salaries from worksheet A, lines 18, 34 through 36, and 58 through 63. Medicare allowable total expenses are equal to total expenses from Worksheet B, lines 16, 21 through 30, 32, 33, 48, and 52 through 54. This share represents the wage and salary share of costs for employees for the SNF, and does not include the wages and salaries from contract labor, which are allocated to wages and salaries in a later step. The same cost report methodology was used to derive the wages and salaries cost weight of the FY 2004-based SNF market basket.

• *Employee Benefits:* We determined the weight for employee benefits using FY 2010 SNF MCR data. We derived the share using Medicare allowable benefit costs from Worksheet S–3, part II and total expenses from Worksheet B. Medicare allowable benefits are equal to total benefits from Worksheet S–3, part II, minus excluded (non-Medicare allowable) benefits. Non-Medicare allowable benefits are derived by multiplying non-Medicare allowable salaries times the ratio of total benefit costs for the SNF to the total wage costs for the SNF. The same cost report methodology was used to derive the benefits cost weight of the FY 2004-based SNF market basket.

• *Contract Labor:* We determined the weight for contract labor using 2010 SNF MCR data. We derived the share using Medicare allowable contract labor costs from Worksheet S–3, part II line 17 minus nursing facility (NF) contract labor costs, and Medicare allowable total costs from Worksheet B. (Worksheet S–3, part II line 17 only includes direct patient care contract labor attributable to SNF and NF services.) NF contract labor costs, which are not reimbursable under Medicare, are derived by multiplying total contract labor costs by the ratio of NF wages and salaries to the sum of NF and SNF wages and salaries.

As we did for the FY 2004-based SNF market basket, we propose to allocate contract labor costs to the wages and salaries and employee benefits cost weights based on their relative proportion, under the assumption that contract costs are similarly distributed and likely to change at the same rate as direct labor costs even though unit labor cost levels may be different. The contract labor allocation proportion for wages and salaries is equal to the wages and salaries cost weight as a percent of the sum of the wages and salaries cost weight and the employee benefits cost weight. Using the FY 2010 MCR data, this percentage is approximately 81 percent; therefore, we propose to allocate approximately 81 percent of the contract labor cost weight to the wages and salaries cost weight. The remaining proportion of the contract labor cost weight is allocated to the employee benefits cost weight. Table 10 shows the wages and salaries and employee benefit cost weights after contract labor allocation for both the FY 2004-based SNF market basket and the proposed FY 2010-based SNF market basket.

TABLE 10—WAGES AND SALARIES AND EMPLOYEE BENEFITS COST WEIGHTS AFTER CONTRACT LABOR ALLOCATION

Major cost categories	Proposed FY 2010-based SNF market basket	FY 2004-Based SNF market basket
Wages and salaries	50.573	51.337
Employee benefits	11.520	11.418

Prior to contract labor allocation, the proposed FY 2010-based SNF market basket wages and salaries cost weight was about 2 percentage points lower than the FY 2004-based SNF market basket wages and salaries cost weight while the proposed FY 2010-based employee benefit cost weight was 0.2 percentage point lower than the FY 2004-based employee benefit cost weight. After the allocation of contract labor, the proposed FY 2010-based wages and salaries cost weight is about 0.7 percentage point lower than the FY 2004-based wages and salaries cost weight while the proposed FY 2010-based employee benefits cost weight is about 0.1 percentage point higher than the FY 2004-based employee benefit cost weight. This is due to the increase in the FY 2010-based SNF market basket contract labor cost weight from the FY 2004-based SNF market basket contract labor cost weight, of which 81 percent of this increase is applied to the wages and salaries cost weight and 19 percent is applied to the employee benefit cost weight, offsetting the actual decrease in the wages and salaries and employee benefit cost weights prior to the contract labor allocation.

• *Pharmaceuticals:* We derive the cost weight for pharmaceuticals in two steps using the FY 2010 SNF MCR and Medicare claims data.

First, we calculated pharmaceutical costs using the non-salary costs from the Pharmacy cost center and the Drugs Charged to Patients' cost center, both found on Worksheet B of the SNF MCRs. Since these drug costs were attributable to the entire SNF and not limited to Medicare allowable services, we adjusted the drug costs by the ratio of Medicare allowable pharmacy total costs to total pharmacy costs from Worksheet B, part I, column 11. Worksheet B, part I allocates the general service cost centers, which are often referred to as ''overhead costs'' (in which pharmacy costs are included) to the Medicare allowable and non-Medicare allowable cost centers. This resulted in a proposed FY 2010-based SNF market basket drug cost weight of 3.1 percent compared to the FY 2004-based SNF market basket drug cost weight, which was 3.2 percent using the same methodology. This drug cost share does not include the drug expenses associated with Medicaid patients. The methodology for including the Medicaid drug expenditures is explained in detail below. This Medicaid drug add-on increases the drug expenditure weight to over seven percent, and is consistent with the Medicaid drug add-on method that was used in the FY 2004-based SNF market basket.

Second, for the FY 2010-based SNF market basket, we are proposing to continue to adjust the drug expenses reported on the MCR to include an estimate of total Medicaid drug costs, which are not represented in the Medicare-allowable drug cost weight. Similar to the last rebasing, we are estimating Medicaid drug costs based on data representing dual-eligible Medicaid beneficiaries. Medicaid drug costs are estimated by multiplying Medicaid dual eligible drug costs per day times the number of Medicaid days as reported in the Medicare allowable skilled nursing cost center in the SNF MCR. Medicaid dual eligible drug costs per day (where the day represents an unduplicated drug supply day) were estimated using a sample of 2010 Part D claims for those dual-eligible beneficiaries who had a Medicare SNF stay during the year. Medicaid dual-eligible beneficiaries would receive their drugs through the Medicare Part D benefit, which would work directly with the pharmacy, and therefore, these costs would not be represented in the Medicare SNF MCRs. A random 20 percent sample of Medicare Part D claims data yielded a Medicaid drug cost per day of $17.39. We note that the FY 2004-based SNF market basket relied on data from the Medicaid Statistical Information System, which yielded a dual eligible Medicaid drug cost per day of $13.65 for 2004. For the revised and rebased FY 2010-based SNF market basket, we propose to use Part D claims to estimate total Medicaid drug costs as this provides drug expenditure data for dual-eligible beneficiaries for 2010. The Medicaid Statistical Information System is no longer a comprehensive database for dual-eligible beneficiaries' drug costs.

The proposed adjusted FY 2010-based SNF market basket drug cost weight, representing all drug expenditures including those we estimated for Medicaid, is 7.872 percent. The FY 2004-based SNF market basket pharmaceutical cost weight was 7.894 percent.

• *Professional Liability Insurance:* We calculated the professional liability insurance cost weight using costs from Worksheet S–2 of the MCRs as the sum of premiums, paid losses, and self-insurance. To derive the professional liability insurance cost weight for the proposed FY 2010-based SNF market basket, we used the same cost report methodology that was used to derive the cost weight of the FY 2004-based SNF market basket (see 72 FR 25543–25544). For the proposed FY 2010-based SNF market basket, the professional liability weight is 1.141 percent, which is slightly lower than the 1.717 weight for the FY 2004-based SNF market basket.

• *Capital-Related:* We derived the weight for overall capital-related expenses using the FY 2010 SNF MCRs. We calculated the Medicare allowable capital-related cost weight from Worksheet B, part II. In determining the subcategory weights for capital, we used information from the FY 2010 SNF MCR and the 2010 Bureau of Census' Service Annual Survey (SAS) data. For the FY 2004-based SNF market basket, we relied on the Bureau of Census Business Expenditure Survey (BES). The SAS data is a replacement/extension of the BES data, reflecting more recent data.

We calculated the depreciation cost weight (that is, depreciation costs excluding leasing costs) using depreciation costs from Worksheet S–2. Since the depreciation costs reflect the entire SNF facility (Medicare and non-Medicare allowable units) we used total facility costs as the denominator. This methodology assumes that the depreciation of an asset is the same regardless of whether the asset was used for Medicare or non-Medicare patients. This methodology yielded a FY 2010-based SNF market basket depreciation cost weight of 2.301 percent. This depreciation cost weight is further adjusted to account for a proportion of leasing expenses, which is described in more detail below. We determined the distribution between building and fixed equipment and movable equipment depreciation from the FY 2010 SNF

MCR, as well. The FY 2010 SNF MCR data showed a fixed/moveable depreciation split of 85/15, which is the same split used in the FY 2004-based SNF market basket.

We also derived the interest expense share of capital-related expenses from Worksheet A from the FY 2010 SNF MCRs. Similar to the depreciation cost weight, we calculated the interest cost weight using total facility costs. As done with the last rebasing, we determined the split of interest expense between for-profit and not-for-profit facilities based on the distribution of long-term debt outstanding by type of SNF (for-profit or not-for-profit) from the FY 2010 SNF MCRs. We estimated the split between for-profit and not-for-profit interest expense to be 41/59 percent.

Because the data were not available in the MCRs, we used the most recent 2010 SAS data to derive the capital-related expenses attributable to leasing and other capital-related expenses. Based on the 2010 SAS data, we determined the leasing costs to be 30 percent of total capital-related expenses, while we determined the other capital-related costs (insurance, taxes, licenses, other) to be 18 percent of total capital-related expenses. In the FY 2004-based SNF market basket, leasing costs represent 21 percent of total capital-related expenses while other capital-related costs represent 13 percent of total capital-related expenses.

Lease expenses are not broken out as a separate cost category, but are distributed among the cost categories of depreciation, interest, and other capital, reflecting the assumption that the underlying cost structure and price movement of leasing expenses is similar to capital costs in general. As was done in previous rebasings, we assumed 10 percent of lease expenses are overhead and assigned them to the other capital expenses cost category. We distributed the remaining lease expenses to the three cost categories based on the proportion of depreciation, interest, and other capital expenses to total capital costs, excluding lease expenses.

Table 11 shows the capital-related expense distribution (including expenses from leases) in the proposed FY 2010-based SNF market basket and the FY 2004-based SNF market basket.

TABLE 11—COMPARISON OF THE CAPITAL-RELATED EXPENSE DISTRIBUTION OF THE FY 2010-BASED SNF MARKET BASKET AND THE FY 2004-BASED SNF MARKET BASKET

Cost category	Proposed FY 2010-based SNF market basket	FY 2004-based SNF market basket
Capital-related expenses	7.360	7.207
Total Depreciation	3.180	2.858
Total Interest	2.096	3.037
Other Capital-related Expenses	2.084	1.312

Our methodology for determining the price change of capital-related expenses accounts for the vintage nature of capital, which is the acquisition and use of capital over time. To capture this vintage nature, the price proxies must be vintage-weighted. The determination of these vintage weights occurs in two steps. First, we must determine the expected useful life of capital and debt instruments held by SNFs. Second, we must identify the proportion of expenditures within a cost category that is attributable to each individual year over the useful life of the relevant capital assets, or the vintage weights. We rely on Bureau of Economic Analysis (BEA) fixed asset data to derive the useful lives of both fixed and movable capital, which is the same data source used to derive the useful lives during the last rebasing. The specifics of the data sources used are explained below.

Estimates of useful lives for movable and fixed assets for the proposed FY 2010-based SNF market basket are 6 and 25 years, respectively. These estimates are based on several data sources from the BEA, which publishes various useful life-related statistics, including asset service lives and current-cost average age, historical cost average age, and industry-specific current cost net stocks of assets. While SNF-specific data are not available, we can use the BEA data to develop estimates of useful life that are approximates of SNF capital purchases.

There are two major issues we must address in using the BEA service life data to develop SNF-specific estimates. First, these data are published at a detailed asset level and not at an aggregate level, such as movable and fixed assets. There are 43 detailed movable assets in the BEA estimates. Some examples include computer software (34 months service life), electromedical equipment (9 years), medical instruments and related equipment (12 years), communication equipment (15 years), and office equipment (8 years). There are 23 detailed fixed assets in the BEA estimates. Some examples of detailed fixed assets are medical office buildings (36 years), hospitals and special care buildings (48 years), and lodging (32 years). Again, there are no service life estimates at an aggregate level, such as movable and fixed assets. The second reason BEA service life data are not directly applicable to SNFs is that service lives are not industry-specific; they apply to many different industries and, in most cases, to all industries in the economy. We seek estimates applicable to nursing homes for our SNF-specific estimates. BEA also publishes average asset age estimates. Average age estimates are updated more regularly than service lives data but reflect an average age rather than a service life. To get an estimate of the available service life of an asset, the average age is multiplied by 2 to reflect that some assets are retired prior to the useful life being exhausted. Average age data are available by detailed and aggregate asset levels for the overall economy and were last published in 2012.

We developed a methodology to approximate movable and fixed asset ages for nursing and residential care services (NAICS 623) using the published BEA data. For the proposed FY 2010 SNF market basket, we use the average age for each asset type from the BEA fixed assets Table 2.9 for all assets (not SNF-specific) and weight them using current cost net stock levels for each of these asset types in the nursing and residential care services industry. Current cost net stock levels are available for download from the BEA Web site at *http://www.bea.gov/national/FA2004/Details/Index.html.*

These detailed current cost net stock estimates are not published in the Survey of Current Business, a U.S. Department of Commerce monthly publication that provides data on U.S. businesses. Historical cost average age

estimates for all industries are published in the BEA fixed assets Table 2.10; there are no industry-specific estimates for historical cost average age. Industry-specific historical cost average ages for NAICS 6230 is estimated by multiplying the industry specific current cost average age by the ratio of historical cost to current cost average age for all industries. This produces historical cost average age data for movable and fixed assets specific to NAICS 6230 of 3.2 and 12.2 years, respectively. Since averages are measures of central tendency, we multiply each of these estimates by two to produce estimates of likely useful lives of 6.4 and 24.5 years for movable and fixed assets, which we round to 6 and 25 years, respectively. We are proposing an interest vintage weight time span of 22 years, obtained by weighting the fixed and movable vintage weights (25 years and 6 years, respectively) by the fixed and movable split (85 percent and 15 percent, respectively).

Given the expected useful life of capital and debt instruments, we must determine the proportion of capital expenditures attributable to each year of the expected useful life by cost category. These proportions represent the vintage weights. We were not able to find a historical time series of capital expenditures by SNFs. Therefore, we approximated the capital expenditure patterns of SNFs over time, using alternative SNF data sources. For building and fixed equipment, we used the stock of beds in nursing homes from the National Nursing Home Survey (NNHS) conducted by the National Center for Health Statistics (NCHS) for 1962 through 1999. For 2000 through 2010, we extrapolated the 1999 bed data forward using a 10-year moving average of growth in the number of beds from the SNF MCR data. We then used the change in the stock of beds each year to approximate building and fixed equipment purchases for that year. This procedure assumes that bed growth reflects the growth in capital-related costs in SNFs for building and fixed equipment. We believe that this assumption is reasonable because the number of beds reflects the size of a SNF, and as a SNF adds beds, it also likely adds fixed capital.

For movable equipment, we used available SNF data to capture the changes in intensity of SNF services that would likely be accompanied by the purchase of movable equipment. We used the same methodology to estimate the change in intensity as published in the FY 2008 SNF final rule for the period from 1962 through 2004. For more details of the methodology, see the FY 2008 SNF PPS final rule (72 FR 43428). We propose to use the same methodology to estimate the ratio of ancillary to routine costs for 2005 through 2010 from the SNF MCR. The time series of the ratio of ancillary costs to routine costs for SNFs measures changes in intensity in SNF services, which are assumed to be associated with movable equipment purchase patterns. The assumption here is that as ancillary costs increase compared to routine costs, the SNF caseload becomes more complex and would require more movable equipment. Again, the lack of movable equipment purchase data for SNFs over time required us to use alternative SNF data sources. We believe the resulting two time series, determined from beds and the ratio of ancillary to routine costs, reflect real capital purchases of building and fixed equipment and movable equipment over time.

To obtain nominal purchases, which are used to determine the vintage weights for interest, we converted the two real capital purchase series from 1963 through 2010 determined above to nominal capital purchase series using their respective price proxies (the BEA chained price index for nonresidential construction for hospitals & special care facilities and the PPI for Machinery and Equipment). We then combined the two nominal series into one nominal capital purchase series for 1963 through 2010. Nominal capital purchases are needed for interest vintage weights to capture the value of debt instruments.

Once we created these capital purchase time series for 1963 through 2010, we averaged different periods to obtain an average capital purchase pattern over time: (1) For building and fixed equipment, we averaged 24, 25-year periods; (2) for movable equipment, we averaged 43, 6-year periods; and (3) for interest, we averaged 27, 22-year periods. We calculate the vintage weight for a given year by dividing the capital purchase amount in any given year by the total amount of purchases during the expected useful life of the equipment or debt instrument. Following publication of the FY 2010 IPPS/Rate Year 2010 LTCH PPS proposed rule, and to provide greater transparency, we posted on the CMS market basket Web site at *http://www.cms.gov/Research-Statistics-Data-and-Systems/Statistics-Trends-and-Reports/MedicareProgramRatesStats/MarketBasketResearch.html,* an illustrative spreadsheet that contains an example of how the vintage-weighted price indexes are calculated.

Table 12 shows the resulting vintage weights for each of these cost categories.

TABLE 12—VINTAGE WEIGHTS FOR PROPOSED FY 2010-BASED SNF PPS CAPITAL-RELATED PRICE PROXIES

Year [1]	Building and fixed equipment	Movable equipment	Interest
1	.061	.165	.030
2	.059	.160	.030
3	.053	.167	.032
4	.050	.167	.033
5	.046	.169	.035
6	.043	.171	.037
7	.041		.039
8	.039		.040
9	.036		.041
10	.034		.043
11	.034		.045
12	.034		.047
13	.033		.048
14	.032		.048
15	.031		.050
16	.031		.052
17	.032		.055

TABLE 12—VINTAGE WEIGHTS FOR PROPOSED FY 2010-BASED SNF PPS CAPITAL-RELATED PRICE PROXIES—Continued

Year [1]	Building and fixed equipment	Movable equipment	Interest
18	.034		.058
19	.035		.060
20	.036		.060
21	.038		.058
22	.039		.058
23	.042		
24	.043		
25	.044		
Total	1.000*	1.000*	1.000*

SOURCES: 2010 SNF MCRs; CMS,
NOTE: Totals may not sum to 1.000 due to rounding.
[1] Year 1 represents the vintage weight applied to the farthest year while the vintage weight for year 25, for example, would apply to the most recent year.

• *All Other (residual):* We divided the residual ''all other'' cost category into subcategories, using the BEA's Benchmark Input-Output Tables for the nursing home industry aged to 2010 using relative price changes. (The methodology we used to age the data involves applying the annual price changes from the price proxies to the appropriate cost categories. We repeat this practice for each year. We then apply the resulting 2010 distributions to the aggregate 2010 ''all other'' cost weight of 21.534 percent to yield the detailed 2010 all other cost weights.)

For the FY 2010-based SNF market basket, we are proposing to include five new cost categories compared to the FY 2004-based SNF market basket, as discussed further below. We are also proposing to revise the labels for the labor-intensive and nonlabor-intensive cost categories; the new labels would be ''all other: labor-related'', and ''all other: nonlabor-related''. As discussed in more detail below, we classify a cost category as labor-related and include it in the labor-related share if the cost category is determined to be labor-intensive and its cost varies with the local labor market. In previous regulations, we grouped cost categories that met both of these criteria into labor-intensive services. We believe the new labels more accurately reflect the concepts that they are intended to convey. We are not proposing a change to our definition of the labor-related share, since we continue to classify a cost category as labor-related if the costs are labor-intensive and vary with the local labor market.

For nonmedical professional fees, we are proposing to create two separate cost categories: (1) Nonmedical professional fees: labor-related, and (2) nonmedical professional fees: Nonlabor-related. We discuss the distinction between these two categories in more detail below in the discussion of the labor-related share.

Table 13 compares the proposed FY 2010-based SNF market basket cost weights with the FY 2004-based SNF market basket cost weights.

TABLE 13—COMPARISON OF THE PROPOSED FY 2010-BASED SNF MARKET BASKET COST WEIGHTS AND THE FY 2004-BASED SNF MARKET BASKET COST WEIGHTS

Cost category	Proposed FY 2010-based SNF market basket weights	FY 2004-based SNF market basket weights
Total	100.000	100.000
Compensation	62.093	62.755
Wages and Salaries	50.573	51.337
Employee Benefits	11.520	11.418
Nonmedical Professional Fees [1]		1.322
Nonmedical Professional Fees		1.322
Utilities	2.223	1.551
Electricity	1.411	0.919
Fuels, Non-highway	0.667	0.453
Water and Sewerage	0.145	0.179
Professional Liability Insurance	1.141	1.717
Professional Liability Insurance	1.141	1.717
All Other	27.183	25.448
All Other Products	16.148	19.03
Pharmaceuticals	7.872	7.894
Food, Wholesale Purchase	3.661	2.906
Food, Retail Purchase	1.190	3.151
Chemicals	0.166	0.589
Medical Instruments and Supplies [2]	0.764	
Rubber and Plastics	0.981	1.513
Paper and Printing Products	0.838	1.394
Apparel [2]	0.195	
Machinery and Equipment [2]	0.190	
Miscellaneous Products	0.291	1.582

TABLE 13—COMPARISON OF THE PROPOSED FY 2010-BASED SNF MARKET BASKET COST WEIGHTS AND THE FY 2004-BASED SNF MARKET BASKET COST WEIGHTS—Continued

Cost category	Proposed FY 2010-based SNF market basket weights	FY 2004-based SNF market basket weights
All Other Services	11.035	6.418
Labor-Related Services	6.227	.....
Nonmedical Professional Fees: Labor-related [1]	3.427	.....
Administrative and Facilities Support [3]	0.497	.....
All Other: Labor-Related Services [4]	2.303	3.521
NonLabor-Related Services	4.808	.....
Nonmedical Professional Fees: Nonlabor-related [1]	2.042	.....
Financial Services [5]	0.899	.....
Telephone Services	0.572	0.434
Postage	0.240	0.454
All Other: Nonlabor-related Services [4]	1.055	2.008
Capital-related Expenses	7.360	7.207
Total Depreciation	3.180	2.858
Building and Fixed Equipment	2.701	2.437
Movable Equipment	0.479	0.421
Total Interest	2.096	3.037
For-Profit SNFs	0.869	1.197
Non-profit SNFs	1.227	1.84
Other Capital-related Expenses	2.084	1.312
Other	2.084	1.312

[1] For the FY 2010-based SNF Market basket, we are proposing to divide this category into nonmedical professional fees: labor-related and nonmedical professional fees: nonlabor-related.

[2] For the FY 2010-based SNF Market basket, we are proposing to create a separate cost category for these expenses to proxy the price growth by a more specific index. These expenses were previously classified under miscellaneous products in the FY 2004-based SNF market basket.

[3] For the FY 2010-based SNF Market basket, we are proposing to create a separate cost category for these expenses to proxy the price growth by a more specific index. These expenses were previously classified under labor intensive services cost weight in the FY 2004-based SNF market basket.

[4] For the FY 2010-based SNF market basket, we are proposing to revise the labels for the labor-intensive and nonlabor-intensive cost categories to be all other: labor-related and all other: nonlabor-related.

[5] For the FY 2010-based SNF market basket, we are proposing to create a separate cost category for these expenses to proxy the price growth by a more specific index. These expenses were previously classified under nonlabor intensive services cost weight in the FY 2004-based SNF market basket.

3. Price Proxies Used To Measure Cost Category Growth

After developing the 29 cost weights for the proposed FY 2010-based SNF market basket, we selected the most appropriate wage and price proxies currently available to represent the rate of change for each expenditure category. With four exceptions (three for the capital-related expenses cost categories and one for Professional Liability Insurance (PLI)), we base the wage and price proxies on Bureau of Labor Statistics (BLS) data, and group them into one of the following BLS categories:

• *Employment Cost Indexes.* Employment Cost Indexes (ECIs) measure the rate of change in employment wage rates and employer costs for employee benefits per hour worked. These indexes are fixed-weight indexes and strictly measure the change in wage rates and employee benefits per hour. ECIs are superior to Average Hourly Earnings (AHE) as price proxies for input price indexes because they are not affected by shifts in occupation or industry mix, and because they measure pure price change and are available by both occupational group and by industry. The industry ECIs are based on the 2004 North American Industry Classification System (NAICS).

• *Producer Price Indexes.* Producer Price Indexes (PPIs) measure price changes for goods sold in other than retail markets. PPIs are used when the purchases of goods or services are made at the wholesale level.

• *Consumer Price Indexes.* Consumer Price Indexes (CPIs) measure change in the prices of final goods and services bought by consumers. CPIs are only used when the purchases are similar to those of retail consumers rather than purchases at the wholesale level, or if no appropriate PPI were available.

We evaluated the price proxies using the criteria of reliability, timeliness, availability, and relevance. Reliability indicates that the index is based on valid statistical methods and has low sampling variability. Widely accepted statistical methods ensure that the data were collected and aggregated in a way that can be replicated. Low sampling variability is desirable because it indicates that the sample reflects the typical members of the population. (Sampling variability is variation that occurs by chance because only a sample was surveyed rather than the entire population.) Timeliness implies that the proxy is published regularly, preferably at least once a quarter. The market baskets are updated quarterly, and therefore, it is important for the underlying price proxies to be up-to-date, reflecting the most recent data available. We believe that using proxies that are published regularly (at least quarterly, whenever possible) helps to ensure that we are using the most recent data available to update the market basket. We strive to use publications that are disseminated frequently, because we believe that this is an optimal way to stay abreast of the most current data available. Availability means that the proxy is publicly available. We prefer that our proxies are publicly available because this will help ensure that our market basket updates are as transparent to the public as possible. In addition, this enables the public to be able to obtain the price proxy data on a regular basis. Finally, relevance means that the proxy is applicable and representative of the cost category weight to which it is applied.

The CPIs, PPIs, and ECIs that we have selected to propose in this regulation meet these criteria. Therefore, we believe that they continue to be the best measure of price changes for the cost categories to which they would be applied.

As discussed above, we propose that if the 2007 Benchmark I–O data become available between the proposed and final rule with sufficient time to incorporate such data into the final rule, we would incorporate these data, as appropriate, into the FY 2010-based SNF market basket for the final rule. In addition, we propose that to the extent the incorporation of the 2007 Benchmark I–O data results in a different composition of costs included in a particular cost category, we would revise that specific price proxy, as appropriate, to ensure that the costs included in each detailed cost category are aligned with the most appropriate price proxy. Table 15 lists all price proxies for the proposed revised and rebased SNF market basket. Below is a detailed explanation of the price proxies used for each cost category weight.

• *Wages and Salaries:* We are proposing to use the ECI for Wages and Salaries for Nursing Care Facilities (Private Industry) (NAICS 6231; BLS series code CIU2026231000000I) to measure price growth of this category. The FY 2004-based SNF market basket used a blended index based on 50 percent of the ECI for wages and salaries for nursing and residential care facilities (NAICS 623) and 50 percent of the ECI for wages and salaries for hospital workers (NAICS 622). For the FY 2010-based SNF market basket, we are proposing to use the Nursing Care Facilities ECI, as we believe this ECI better reflects wage trends consistent with services provided by Medicare-certified SNFs.

NAICS 623 includes facilities that provide a mix of health and social services, with many of the health services being largely some level of nursing services. Within NAICS 623 is NAICS 6231, which includes nursing care facilities primarily engaged in providing inpatient nursing and rehabilitative services. These facilities, which are most comparable to Medicare-certified SNFs, provide skilled nursing and continuous personal care services for an extended period of time, and therefore, have a permanent core staff of registered or licensed practical nurses. At the time of the last rebasing, BLS had just begun publishing ECI data for the more detailed nursing care facilities (NAICS 6231), and therefore, IGI, the economic forecasting firm, was unable to forecast this price proxy.

BLS has now published over six years of historical data for the ECI for Nursing Care Facilities (NAICS 6231), which allows IGI to create a forecast for this detailed index. Additionally, in analyzing the historical trends, we believe this ECI is the most technically appropriate wage concept to use for the proposed revised and rebased 2010-based SNF market basket as it is most comparable to Medicare-certified SNFs, which are engaged in providing inpatient nursing and rehabilitative services.

• *Employee Benefits:* We are proposing to use the ECI for Benefits for Nursing Care Facilities (NAICS 6231) to measure price growth of this category. The ECI for Benefits for Nursing Care Facilities is calculated using BLS's total compensation (BLS series ID CIU2016231000000I) for nursing care facilities series and the relative importance of wages and salaries within total compensation. We believe this ECI and constructed series is technically appropriate for the reason stated above in the wages and salaries price proxy section. We used a blended benefits index in the FY 2004-based SNF market basket.

• *Electricity:* We are proposing to use the PPI for Commercial Electric Power (BLS series code WPU0542) to measure the price growth of this cost category. We used the same index in the FY 2004-based SNF market basket.

• *Fuels, nonhighway:* We are proposing to use the PPI for Commercial Natural Gas (BLS series code WPU0552) to measure the price growth of this cost category. We used the same index in the FY 2004-based SNF market basket.

• *Water and Sewerage:* We are proposing to use the CPI for Water and Sewerage Maintenance (All Urban Consumers) (BLS series code CUUR0000SEHG01) to measure the price growth of this cost category. We used the same index in the FY 2004-based SNF market basket.

• *Professional Liability Insurance:* We are proposing to use the CMS Hospital Professional Liability Insurance Index to measure price growth of this category. In the FY 2008 proposed rule (72 FR 25552), we stated our difficulties associated with pricing malpractice costs experienced in all healthcare sectors, including hospitals and physicians. We also stated our intent to research alternative data sources, such as obtaining the data directly from the individual states' Departments of Insurance. We were unable to find a reliable data source that collects SNF-specific PLI data. Therefore, we are proposing to use the CMS Hospital Professional Liability Index, which tracks price changes for commercial insurance premiums for a fixed level of coverage, holding nonprice factors constant (such as a change in the level of coverage). We used the same index in the FY 2004-based SNF market basket. We believe this is an appropriate proxy to measure the price growth associated with SNF professional liability insurance, as it captures the price inflation associated with other medical institutions that serve Medicare patients.

• *Pharmaceuticals:* We are proposing to use the PPI for Pharmaceuticals for Human Use, Prescription (BLS series code WPUSI07003) to measure the price growth of this cost category. This is the same proxy that was used in the FY 2004-based SNF market basket, though BLS has since changed the naming convention of this series.

• *Food: Wholesale Purchases:* We are proposing to use the PPI for Processed Foods and Feeds (BLS series code WPU02) to measure the price growth of this cost category. We used the same index in the FY 2004-based SNF market basket.

• *Food: Retail Purchase:* We are proposing to use the CPI for Food Away From Home (All Urban Consumers) (BLS series code CUUR0000SEFV) to measure the price growth of this cost category. We used the same index in the FY 2004-based SNF market basket.

• *Chemicals:* For measuring price change in the Chemicals cost category, we are proposing to use a blended PPI composed of the PPIs for Other Basic Organic Chemical Manufacturing (NAICS 325190) (BLS series code PCU32519–32519), Paint and Coating Manufacturing (NAICS 325510) (BLS series code PCU32551–32551), Soap and Cleaning Compound Manufacturing (NAICS 325610) (BLS series code PCU32561–32561), and All Other Chemical Product and Preparation Manufacturing (NAICS 3259A0) (BLS series code PCU3259–3259).

Using the 2002 Benchmark I–O data, we found that these four NAICS industries accounted for approximately 95 percent of SNF chemical expenses. The remaining 5 percent of SNF chemical expenses are for five other incidental NAICS chemicals industries, such as Alkalies and Chlorine Manufacturing. We are proposing to create a blended index based on those four NAICS chemical expenses listed above that account for 95 percent of SNF chemical expenses. We are proposing to create a blend based on each NAICS' expenses as a share of their sum. As stated above, we propose that if the 2007 Benchmark I–O data become available between the proposed and

final rule with sufficient time to incorporate such data into the final rule, we would incorporate these data, as appropriate, into the FY 2010-based SNF market basket for the final rule. In addition, we propose that to the extent the incorporation of the 2007 Benchmark I–O data results in a different composition of chemical costs, we may revise, as appropriate, the blended chemical index set forth above to reflect these more recent data on SNF chemical purchases, to better align the costs with its price proxy. Table 14 below provides the weights for the blended chemical index.

TABLE 14—PROPOSED CHEMICAL BLENDED INDEX WEIGHTS

NAICS	Industry description	Weights (percent)
325190	Other basic organic chemical manufacturing	7
325510	Paint and coating manufacturing	12
325610	Soap and cleaning compound manufacturing	49
3259A0	All other chemical product and preparation manufacturing	32
		100

The FY 2004-based SNF market basket also used a blended chemical proxy that was based on 1997 Benchmark I–O data. We believe our proposed chemical blended index for the FY 2010-based SNF market basket is technically appropriate, as it reflects more recent data on SNFs' purchasing patterns.

• *Medical Instruments and Supplies:* We are proposing to use the PPI for Medical, Surgical, and Personal Aid Devices (BLS series code WPU156) to measure the price growth of this cost category. The FY 2004-based SNF market basket did not include a separate cost category for these expenses. Rather, these expenses were classified in the miscellaneous products cost category and proxied by the PPI for Finished Goods less Food and Energy (BLS series code WPUSOP3500). As stated above, we are proposing to break-out this cost category to proxy these expenses by a more specific price index that better reflects the price growth of medical instruments and supplies.

• *Rubber and Plastics:* We are proposing to use the PPI for Rubber and Plastic Products (BLS series code WPU07) to measure price growth of this cost category. We used the same index in the FY 2004-based SNF market basket.

• *Paper and Printing Products:* We are proposing to use the PPI for Converted Paper and Paperboard Products (BLS series code WPU0915) to measure the price growth of this cost category. We used the same index in the FY 2004-based SNF market basket.

• *Apparel:* We are proposing to use the PPI for Apparel (BLS series code WPU0381) to measure the price growth of this cost category. The FY 2004-based SNF market basket did not have a separate cost category for these expenses. Rather, these expenses were classified in the miscellaneous products cost category and proxied by the PPI for Finished Goods less Food and Energy. As stated above, we are proposing to break-out this cost category to proxy these expenses by a more specific price index that better reflects the price growth of apparel products.

• *Machinery and Equipment:* We are proposing to use the PPI for Machinery and Equipment (BLS series code WPU11) to measure the price growth of this cost category. The 2004-based index did not have a separate cost category for these expenses. Rather, these expenses were classified in the miscellaneous products cost category and proxied by the PPI for Finished Goods less Food and Energy (BLS series code WPUSOP3500). As stated above, we are proposing to break-out this cost category to proxy these expenses by a more specific price index that reflects the price growth of machinery and equipment.

• *Miscellaneous Products:* For measuring price change in the Miscellaneous Products cost category, we are proposing to use the PPI for Finished Goods less Food and Energy (BLS series code WPUSOP3500). Both food and energy are already adequately represented in separate cost categories and should not also be reflected in this cost category. We used the same index in the FY 2004-based SNF market basket.

• *Nonmedical Professional Fees: Labor-Related and Nonmedical Professional Fees: Nonlabor-Related:* We are proposing to use the ECI for Total Compensation for Professional and Related Occupations (Private Industry) (BLS series code CIU2010000120000I) to measure the price growth of these categories. As described in more detail below, for this revising and rebasing of the SNF market basket we are proposing to divide the nonmedical professional fees cost category into two separate cost categories: (1) Nonmedical professional fees: labor-related; and (2) nonmedical professional fees: Nonlabor-related. By separating these two categories we are able to identify more precisely which categories are to be included in the labor-related share, which is used in applying the SNF PPS geographic adjustment factor. We are proposing to proxy both of these cost categories by the ECI for Total Compensation for Professional and Related Occupations (Private Industry). This is the same proxy that was used in the FY 2004-based SNF market basket.

• *Administrative and Facilities Support Services:* We are proposing to use the ECI for Total Compensation for Office and Administrative Support Services (Private Industry) (BLS series code CIU2010000220000I) to measure the price growth of this category. The FY 2004-based SNF market basket did not have a separate cost category for these expenses. Rather, these expenses were classified under labor intensive services and proxied by the ECI for Compensation for Service Occupations (Private Industry). As stated above, we are proposing to create a separate cost category for these expenses to reflect the specific price changes associated with these services.

• *All Other: Labor-Related Services:* We are proposing to use the ECI for Total Compensation for Service Occupations (Private Industry) (BLS series code CIU2010000300000I) to measure the price growth of this cost category (previously referred to as the labor-intensive cost category in the FY 2004-based SNF market basket index). We used the same index in the FY 2004-based SNF market basket. As explained above, for this revising and rebasing of the SNF market basket, we are proposing to revise our label for the labor-intensive services to the all other: labor-related services.

• *Financial Services:* We are proposing to use the ECI for Total Compensation for Financial Activities

(Private Industry) (BLS series code CIU201520A000000I) to measure the price growth of this cost category. The FY 2004-based SNF market basket did not have a separate cost category for these expenses. Rather, these expenses were classified under nonlabor intensive services cost category and proxied by the CPI for All Items (Urban). As stated above, we are proposing to create a separate cost category for these expenses to reflect the specific price changes associated with these services.

• *Telephone Services:* We are proposing to use the CPI for Telephone Services (Urban) (BLS series code CUUR0000SEED) to measure the price growth of this cost category. We used the same index in the FY 2004-based SNF market basket.

• *Postage:* We are proposing to use the CPI for Postage and Delivery Services (Urban) (BLS series code CUUR0000SEEC) to measure the price growth of this cost category. We used the same index in the FY 2004-based SNF market basket.

• *All Other: NonLabor-Related Services:* We are proposing to use the CPI for All Items Less Food and Energy (BLS series code CUUR0000SA0L1E) to measure the price growth of this cost category (previously referred to as the nonlabor-intensive cost category in the FY 2004-based SNF market basket index). Previously these costs were proxied by the CPI for All Items (Urban). We believe that using the CPI for All Items Less Food and Energy (BLS series code CUUR0000SA0L1E) will remove any double-counting of food and energy prices, which are already captured elsewhere in the market basket. Consequently, we believe that the incorporation of this proxy represents a technical improvement to the market basket.

• *Capital-Related Expenses:* For the capital price proxies (with the exception of the price proxy for the other capital-related cost category weight), we calculate vintage weighted price proxies. The methodology used to derive the vintage weights was described above. Below, we describe the price proxies for the SNF capital-related expenses:

• *Depreciation—Building and Fixed Equipment:* For measuring price change in this cost category, we are proposing to use BEA's chained price index for nonresidential construction for hospital and special care facilities. This is a publicly available price index used by BEA to deflate current-dollar private fixed investment for hospitals and special care facilities. The 2004-based index used the Boeckh Institutional Construction Index, which is not publicly available. We compared the BEA index with the Boeckh Institutional Construction Index and found that the average growth rates in the two series were similar over the historical time period. We are proposing to use the BEA price index in the FY 2010-based SNF market basket as this index is a publicly available index that reflects the price inflation associated with nonresidential construction, such as the construction of hospitals and special care facilities. As stated above, we prefer that our proxies are publicly available because this will help ensure that our market basket updates are as transparent to the public as possible.

• *Depreciation—Movable Equipment:* For measuring price change in this cost category, we are proposing to use the PPI for Machinery and Equipment (BLS series code WPU11). The same price proxy was used in the FY 2004-based SNF market basket index.

• *Interest—Government and Nonprofit SNFs:* For measuring price change in this cost category, we are proposing to use the Average Yield for Municipal Bonds from the Bond Buyer Index of 20 bonds. CMS input price indexes, including this proposed rebased and revised SNF market basket, appropriately reflect the rate of change in the price proxy and not the level of the price proxy. While SNFs may face different interest rate levels than those included in the Bond Buyer Index, the rate of change between the two is not significantly different. The same price proxy was used in the FY 2004-based SNF market basket index.

• *Interest—For-profit SNFs:* For measuring price change in this cost category, we are proposing to use the Average Yield for Moody's AAA Corporate Bonds. Again, the proposed revised and rebased SNF market basket index focuses on the rate of change in this interest rate, not on the level of the interest rate. The same price proxy was used in the FY 2004-based SNF market basket index.

• *Other Capital-related Expenses:* For measuring price change in this cost category, we are proposing the CPI–U for Rent of Primary Residence (BLS series ID CUUR0000SEHA). The same price proxy was used in the FY2004-based SNF market basket index, though the naming convention is slightly different as we have provided the full BLS naming convention.

Table 15 shows the proposed price proxies for the FY 2010-based SNF Market Basket.

TABLE 15—PROPOSED PRICE PROXIES FOR THE FY 2010-BASED SNF MARKET BASKET

Cost category	Weight	Proposed price proxy
Compensation	62.093	
Wages and Salaries	50.573	ECI for Wages and Salaries for Nursing Care Facilities.
Employee Benefits	11.520	ECI for Benefits for Nursing Care Facilities.
Utilities	2.223	
Electricity	1.411	PPI for Commercial Electric Power.
Fuels, Nonhighway	0.667	PPI for Commercial Natural Gas.
Water and Sewerage	0.145	CPI–U for Water and Sewerage Maintenance.
Professional Liability Insurance	1.141	CMS Hospital Professional Liability Insurance Index.
All Other	27.183	
Other Products	16.148	
Pharmaceuticals	7.872	PPI for Pharmaceuticals for Human Use, Prescription.
Food, Wholesale Purchase	3.661	PPI for Processed Foods and Feeds.
Food, Retail Purchases	1.190	CPI–U for Food Away From Home.
Chemicals	0.166	Blend of Chemical PPIs.
Medical Instruments and Supplies	0.764	PPI for Medical, Surgical, and Personal Aid Devices.
Rubber and Plastics	0.981	PPI for Rubber and Plastic Products.
Paper and Printing Products	0.838	PPI for Converted Paper and Paperboard Products.
Apparel	0.195	PPI for Apparel.
Machinery and Equipment	0.190	PPI for Machinery and Equipment.
Miscellaneous Products	0.291	PPI for Finished Goods Less Food and Energy.
All Other Services	11.035	

TABLE 15—PROPOSED PRICE PROXIES FOR THE FY 2010-BASED SNF MARKET BASKET—Continued

Cost category	Weight	Proposed price proxy
Labor-Related Services	6.227	
Nonmedical Professional Fees: Labor-related	3.427	ECI for Total Compensation for Professional and Related Occupations.
Administrative and Facilities Support	0.497	ECI for Total Compensation for Office and Administrative Support.
All Other: Labor-Related Services	2.303	ECI for Total Compensation for Service Occupations.
Non Labor-Related Services	4.808	
Nonmedical Professional Fees: Non Labor-Related.	2.042	ECI for Total Compensation for Professional and Related Occupations.
Financial Services	0.899	ECI for Total Compensation for Financial Activities.
Telephone Services	0.572	CPI–U for Telephone Services.
Postage	0.240	CPI–U for Postage and Delivery Services.
All Other: Nonlabor-Related Services	1.055	CPI–U for All Items Less Food and Energy.
Capital-Related Expenses	7.360	
Total Depreciation	3.180	
Building and Fixed Equipment	2.701	BEA chained price index for nonresidential construction for hospitals and special care facilities—vintage weighted (25 years).
Movable Equipment	0.479	PPI for Machinery and Equipment—vintage weighted (6 years).
Total Interest	2.096	
For-Profit SNFs	0.869	Average yield on municipal bonds (Bond Buyer Index 20 bonds)—vintage weighted (22 years).
Government and Nonprofit SNFs	1.227	Average yield on Moody's AAA corporate bonds—vintage weighted (22 years).
Other Capital-Related Expenses	2.084	CPI–U for Rent of Primary Residence.
Total	100.000	

4. Proposed Market Basket Estimate for the FY 2014 SNF PPS Update

As discussed previously in this proposed rule, beginning with the FY 2014 SNF PPS update, we are proposing to adopt the FY 2010-based SNF market basket as the appropriate market basket of goods and services for the SNF PPS.

Based on IGI's first quarter 2013 forecast with history through the fourth quarter of 2012, the most recent estimate of the proposed FY 2010-based SNF market basket for FY 2014 is 2.3 percent. IGI is a nationally recognized economic and financial forecasting firm that contracts with CMS to forecast the components of CMS' market baskets. Based on IGI's first quarter 2013 forecast with history through the fourth quarter of 2012, the estimate of the current FY 2004-based SNF market basket for FY 2014 is 2.5 percent.

Table 16 compares the proposed FY 2010-based SNF market basket and the FY 2004-based SNF market basket percent changes. For the historical period between FY 2008 and FY 2012, the average difference between the two market baskets is −0.3 percentage point. This is primarily the result of lower compensation price increases in the FY 2010-based market basket compared to the FY 2004-based SNF market basket. For the forecasted period between FY 2013 and FY 2015, the difference in the market basket forecasts is similar.

TABLE 16—PROPOSED FY 2010-BASED SNF MARKET BASKET AND FY 2004-BASED SNF MARKET BASKET, PERCENT CHANGES: 2008–2015

Fiscal year (FY)	Proposed rebased FY 2010-based SNF market basket	FY 2004-based SNF basket
Historical data:		
FY 2008	3.5	3.6
FY 2009	2.4	2.8
FY 2010	1.8	2.0
FY 2011	2.0	2.2
FY 2012	1.8	2.2
Average FY 2008–2012	2.3	2.6
Forecast:		
FY 2013	1.9	2.3
FY 2014	2.3	2.5
FY 2015	2.4	2.6
Average FY 2013–2015	2.2	2.5

Source: IHS Global Insight, Inc. 1st quarter 2013 forecast with historical data through 4th quarter 2012.

5. Labor-Related Share

We define the labor-related share (LRS) as those expenses that are labor-intensive and vary with, or are influenced by, the local labor market. Each year, we calculate a revised labor-related share based on the relative importance of labor-related cost categories in the input price index. In this FY 2014 SNF PPS proposed rule, we are proposing to revise the labor-related share to reflect the relative importance of the following proposed FY 2010-based SNF market basket cost weights that we believe are labor-intensive and vary with, or are influenced by, the local labor market: (1) Wages and salaries; (2) employee benefits; (3) contract labor; (4) the labor-related portion of nonmedical professional fees; (5) administrative and facilities support services; (6) all other: labor-related services (previously referred to in the FY 2004-based SNF market basket as labor-intensive); and (7) a proportion of capital-related expenses. We are proposing to continue to include a proportion of capital-related expenses because a portion of these expenses are deemed to be labor-intensive and vary with, or are influenced by, the local labor market. For example, a proportion of construction costs for a medical building would be attributable to local construction workers' compensation expenses.

Consistent with previous SNF market basket revisions and rebasings, the ''all other: labor-related services'' cost category is mostly comprised of building maintenance and security services (including, but not limited to, commercial and industrial machinery and equipment repair, nonresidential maintenance and repair, and investigation and security services). Because these services tend to be labor-intensive and are mostly performed at the SNF facility (and therefore, unlikely to be purchased in the national market), we believe that they meet our definition of labor-related services.

For the proposed FY 2010-based SNF market basket, the proposed inclusion of the administrative and facilities support services cost category into the labor-related share remains consistent with the current labor-related share, since this cost category was previously included in the FY 2004-based SNF market basket labor-intensive cost category. As previously stated, we are proposing to establish a separate administrative and facilities support services cost category so that we can use the ECI for Total Compensation for Office and Administrative Support Services to reflect the specific price changes associated with these services.

For the FY 2004-based SNF market basket, we assumed that all nonmedical professional services (including accounting and auditing services, engineering services, legal services, and management and consulting services) were purchased in the local labor market and, thus, all of their associated fees varied with the local labor market. As a result, we previously included 100 percent of these costs in the labor-related share. In an effort to determine more accurately the share of nonmedical professional fees that should be included in the labor-related share, we surveyed SNFs regarding the proportion of those fees that are attributable to local firms and the proportion that are purchased from national firms. We notified the public of our intent to conduct this survey on December 9, 2005 (70 FR 73250) and received no comments (71 FR 8588).

With approval from OMB, we reached out to the industry and received responses to our survey from 141 SNFs. Using data on full-time equivalents to allocate responding SNFs across strata (region of the country and urban/rural status), post-stratification weights were calculated. Based on these weighted results, we determined that SNFs purchase, on average, the following portions of contracted professional services inside their local labor market:

- 86 percent of accounting and auditing services.
- 89 percent of architectural, engineering services.
- 78 percent of legal services.
- 87 percent of management consulting services.

Together, these four categories represent 2.672 percentage points of the total costs for the proposed FY 2010-based SNF market basket. We applied the percentages from this special survey to their respective SNF market basket weights to separate them into labor-related and nonlabor-related costs. As a result, we are designating 2.285 of the 2.672 total to the labor-related share, with the remaining 0.387 categorized as nonlabor-related.

In addition to the professional services listed above, we also classified expenses under NAICS 55, Management of Companies and Enterprises, into the nonmedical professional fees cost category. The NAICS 55 data are mostly comprised of corporate, subsidiary, and regional managing offices, or otherwise referred to as home offices. Formerly, all of the expenses within this category were considered to vary with, or be influenced by, the local labor market, and thus, were included in the labor-related share. Because many SNFs are not located in the same geographic area as their home office, we analyzed data from a variety of sources to determine what proportion of these costs should be appropriately included in the labor-related share.

Our proposed methodology is based on data from the MCRs, as well as a CMS database of Home Office Medicare Records (HOMER) (a database that provides city and state information (addresses) for home offices). The MCR requires SNFs to report their home office compensation costs. Using the HOMER database to determine the home office location for each home office provider number, we compared the location of the SNF with the location of the SNF's home office. We propose to determine the proportion of NAICS 55 costs that should be allocated to the labor-related share based on the percent of SNF home office compensation attributable to SNFs that had home offices located in their respective local labor markets—defined as being in the same MSA. We determined a SNF's MSA using its Zip Code information from the MCR, while a home office MSA was determined using the Medicare HOMER Database, which provided a home office Zip Code, as well.

As stated above, we are proposing to determine the proportion of NAICS 55 costs that should be allocated to the labor-related share based on the percent of SNF home office compensation attributable to those SNFs that had home offices located in their respective labor markets. Using this proposed methodology, we determined that 32 percent of SNF home office compensation costs were for SNFs that had home offices located in their respective local labor markets; therefore, we propose to allocate 32 percent of NAICS 55 expenses to the labor-related share. We believe that this methodology provides a reasonable estimate of the NAICS 55 expenses that are appropriately allocated to the labor-related share, because we primarily rely on data on home office compensation costs as provided by SNFs on Medicare cost reports. By combining these data with the specific MSAs for the SNF and their associated home office, we believe we have a reasonable estimate of the proportion of SNF's home office costs that would be incurred in the local labor market.

In the proposed FY 2010-based SNF market basket, NAICS 55 expenses that were subject to allocation based on the home office allocation methodology represent 1.833 percent of the total costs. Based on the home office results, we are apportioning 0.587 percentage

point of the 1.833 percentage points figure into the labor-related share and designating the remaining 1.247 percentage points as nonlabor-related.

The Benchmark I–O data contains other smaller cost categories that we allocate fully to either ''nonmedical professional fees: Labor-related'' or ''nonmedical professional fees: nonlabor-related.'' Together, the sum of these smaller cost categories, the four nonmedical professional fees cost categories where survey results were available, and the NAICS 55 expenses represent all nonmedical professional fees, or 5.469 percent of total costs in the SNF market basket. Of the 5.469 percentage points, 3.427 percentage points represent professional fees: Labor-related while 2.042 percentage points represent nonmedical professional fees: Nonlabor-related.

Each year, we calculate a revised labor-related share based on the relative importance of labor-related cost categories in the SNF market basket. Table 17 summarizes the proposed updated labor-related share for FY 2014, which is based on the proposed rebased and revised FY 2010-based SNF market basket, compared to the labor-related share that was used for the FY 2013 SNF PPS update.

TABLE 17—LABOR-RELATED RELATIVE IMPORTANCE, FY 2013 AND FY 2014

	Relative importance, labor-related, FY 2013 (FY 2004-based index) 12:2 forecast	Relative importance, labor-related, FY 2014 (FY 2010-based index) 13:1 forecast
Wages and salaries[1]	49.847	49.204
Employee benefits	11.532	11.546
Nonmedical Professional fees: labor-related	1.307	3.451
Administrative and facilities support services	N/A	0.501
All Other: Labor-related services[2]	3.364	2.292
Capital-related (.391)	2.333	2.770
Total	68.383	69.764

[1] As discussed above in section V.A.2 in this preamble, the wages and salaries and employee benefits cost weight reflect contract labor costs.
[2] Previously referred to as labor-intensive services cost category in the FY 2004 -based SNF market basket.

B. Monitoring Impact of FY 2012 Policy Changes

In the FY 2012 SNF PPS final rule, we stated we would monitor the impact of certain FY 2012 policy changes on various aspects of the SNF PPS (76 FR 48498). Specifically, we have been monitoring the impact of the following FY 2012 policy changes:

- Recalibration of the FY 2011 SNF parity adjustment to align overall payments under RUG–IV with those under RUG–III.
- Allocation of group therapy time to pay more appropriately for group therapy services based on resource utilization and cost.
- Implementation of changes to the MDS 3.0 patient assessment instrument, most notably the introduction of the Change-of-Therapy (COT) Other Medicare Required Assessment (OMRA).

We have posted quarterly memos to the SNF PPS Web site which highlight some of the trends we have observed over a given time period. These memos may be accessed through the SNF PPS Web site at *http://www.cms.gov/Medicare/Medicare-Fee-for-Service-Payment/SNFPPS/Downloads/SNF_Monitoring.zip.* Below, we provide a summary of the results derived from this monitoring effort.

1. RUG Distributions

As stated in the FY 2012 SNF PPS final rule (76 FR 48493), the recalibration of the FY 2011 parity adjustment used 8 months of FY 2011 data as the basis for the recalibration. We observed that case-mix utilization patterns continued to be consistent over the final 4 months of FY 2011 and would not have resulted in a significant difference in the calculated amount of the recalibrated parity adjustment. We have posted data illustrating the RUG–IV distribution of days for the entirety of FY 2011, as compared to the days distribution used to calculate the parity adjustment in the FY 2012 final rule, and the distribution of days for FY 2012, all of which may be found at *http://www.cms.gov/Medicare/Medicare-Fee-for-Service-Payment/SNFPPS/Downloads/SNF_Monitoring.zip.*

Additionally, case-mix utilization observed during FY 2012 has not shown unanticipated changes in patient classification. Overall patient case mix is not significantly different from that observed in FY 2011. Table 18 illustrates a breakdown of the SNF case-mix distribution of service days by the major RUG classification categories for FY 2011 and FY 2012.

TABLE 18—SNF CASE-MIX DISTRIBUTIONS BY MAJOR RUG–IV CATEGORY

	FY 2011 (percent)	FY 2012 (percent)
Rehabilitation Plus Extensive Services	2.5	1.8
Rehabilitation	87.9	88.8
Extensive Services	0.6	0.7
Special Care	4.6	4.9
Clinically Complex	2.5	2.2
Behavioral Symptoms and Cognitive Performance	0.4	0.3
Reduced Physical Function	1.5	1.4

As illustrated in Table 18, there has been a decrease in the Rehabilitation Plus Extensive Services category and increases in some of the medically-based RUG categories, specifically Special Care and Extensive Services.

It should be noted that the recalibration of the parity adjustment applied only to those RUG–IV groups with a therapy component (Rehabilitation Plus Extensive Services and Rehabilitation). This caused a shift in the hierarchy of nursing case-mix weights among the various RUG–IV groups. Since SNFs are permitted to ''index maximize'' when determining a resident's RUG classification (that is, of those RUGs for which the resident qualifies, SNFs are permitted to choose the one with the highest per diem payment), it is possible that the aforementioned case-mix distribution shifts reflect residents that had previously been classified into therapy groups but now index maximize into nursing groups instead.

Looking specifically at the case-mix distribution for Rehabilitation RUGs only, the data show an increase in the percentage of service days at the highest therapy level (Ultra High Rehabilitation) in FY 2012. This is illustrated in Table 19.

TABLE 19—SNF CASE-MIX DISTRIBUTION FOR THERAPY RUG–IV GROUPS, BY MINOR RUG–IV THERAPY CATEGORIES

	FY 2011 (percent)	FY 2012 (percent)
Ultra-High Rehabilitation (≥ 720 minutes of therapy per week)	44.8	48.6
Very-High Rehabilitation (500–719 minutes of therapy per week)	26.9	25.6
High Rehabilitation (325–499 minutes of therapy per week)	10.8	10.1
Medium Rehabilitation (150–324 minutes of therapy per week)	7.6	6.2
Low Rehabilitation (45–149 minutes of therapy per week)	0.1	0.1

Although the decreases in the percentage of service days which classify into the Very-High, High, and Medium Rehabilitation RUG–IV therapy categories may be explained by the increased utilization of the Ultra-High Rehabilitation RUG–IV therapy category, some of the decrease may be due to index maximization into the Special Care RUG–IV category.

2. Group Therapy Allocation

To account more accurately for resource utilization and cost and to equalize the payment incentives across therapy modes, we allocated group therapy time beginning in FY 2012. We anticipated that this policy would result in some change to the type of therapy mode (that is, individual, concurrent, or group) used for SNF residents. As noted in the section above, we have not observed any significant difference in patient case mix. However, as illustrated in Table 20, providers have significantly changed the mode of therapy since our STRIVE study (2006–2007).

TABLE 20—MODE OF THERAPY PROVISION

	STRIVE (percent)	FY 2011 (percent)	FY 2012 (percent)
Individual	74	91.8	99.5
Concurrent	25	0.8	0.4
Group	<1	7.4	0.1

In the FY 2010 final rule (74 FR 40288, 40315–40319), we established a policy that, beginning in FY 2011, we would allocate concurrent therapy without the allocation of group therapy and, as a result, providers shifted from concurrent therapy to group therapy. In the FY 2012 SNF PPS final rule (76 FR 48486, 48511–48517), we established a policy that would allocate group therapy, and data from FY 2012 indicate that facilities are providing individual therapy almost exclusively.

3. MDS 3.0 Changes

In the FY 2012 SNF PPS final rule, we introduced a new assessment called the COT OMRA to capture more accurately the therapy services provided to SNF residents. Effective for services provided on or after October 1, 2011, SNFs are required to complete a COT OMRA for patients classified into a RUG–IV therapy category (and for patients receiving therapy services who are classified into a nursing RUG because of index maximization), whenever the intensity of therapy changes to such a degree that it would no longer reflect the RUG–IV classification and payment assigned for the patient based on the most recent assessment used for Medicare payment (76 FR 48525). An evaluation of the necessity for a COT OMRA must be completed at the end of each COT observation period, which is a successive 7-day window beginning on the day following the ARD set for the most recent scheduled or unscheduled PPS assessment (or beginning the day therapy resumes in cases where an EOT–R OMRA is completed), and ending every seven calendar days thereafter. In cases where the resident's therapy has changed to such a degree that it is no longer consistent with the resident's current RUG–IV classification, then the SNF must complete a COT OMRA to reclassify the resident into the appropriate RUG–IV category. The new RUG–IV group resulting from the COT OMRA is billed starting the first day of the 7-day COT observation period for which the COT OMRA was completed and remains at this level until a new assessment is done that changes the patient's RUG–IV classification. Table 21 shows the distribution of all MDS assessment types as a percentage of all MDS assessments.

TABLE 21—DISTRIBUTION OF MDS ASSESSMENT TYPES

	FY 2011 (percent)	FY 2012 (percent)
Scheduled PPS assessment	95	84
Start-of-Therapy (SOT) OMRA	2	2
End-of-Therapy (EOT) OMRA (w/o Resumption)	3	3
Combined SOT/EOT OMRA	0	0
End-of-Therapy OMRA (w/Resumption) (EOT–R OMRA)	N/A	0
Combined SOT/EOT–R OMRA	N/A	0
Change-of-Therapy (COT) OMRA	N/A	11

Prior to the implementation of the COT OMRA, scheduled PPS assessments comprised the vast majority of completed assessments. With the implementation of the COT OMRA for FY 2012, scheduled PPS assessments still comprise the vast majority of completed MDS assessments, though the COT OMRA is the most frequently completed OMRA.

4. Conclusion

Information related to our monitoring activities is posted on the SNF PPS Web site at *http://www.cms.gov/Medicare/Medicare-Fee-for-Service-Payment/SNFPPS/Downloads/SNF_Monitoring.zip.* Based on the data reviewed thus far, we have found no evidence of the possible negative impacts on SNF providers cited in comments in the FY 2012 final rule (see 76 FR 48497–98, 48537), particularly references to a potential ''double hit'' from the combined impact of the recalibration of the FY 2011 SNF parity adjustment and the FY 2012 policy changes (for example, allocation of group therapy time and introduction of the COT OMRA). As noted in the data provided in this section, overall case mix has not been affected significantly, which suggests that the aforementioned changes, while ensuring more accurate payment, have been absorbed into facility practices in such a manner that facilities continue to maintain historical trends in terms of patient case mix. Therefore, while we will continue our SNF monitoring efforts, we will post information to the aforementioned Web site only as appropriate.

C. Ensuring Accuracy in Grouping to Rehabilitation RUG–IV Categories

As noted in section III.C of this proposed rule, under section 1888(e)(4)(G)(i) of the Act, the federal rate incorporates an adjustment to account for facility case mix, using a classification system that accounts for the relative resource utilization of different patient types. As part of the Nursing Home Case-Mix and Quality demonstration project, Version III of the Resource Utilization Groups (RUG–III) case-mix classification system was developed to capture resource use of nursing home patients and to provide an improved method of tracking the quality of their care. In 1998, the first version of RUG–III was a 44-group model for classifying SNF patients into homogeneous groups according to their clinical characteristics and the amount and type of resources they use as measured by the Resident Assessment Instrument, the Minimum Data Set (MDS). A detailed description of the RUG–III groups appears in the interim final rule with comment period from May 12, 1998 (63 FR 26262–26263). The RUG–III groups were the basis for the case mix indexes used to establish equitable prospective payment levels for patients with different service use.

In FY 2006, the RUG–III classification system was refined to include 53 groups for case-mix classification that continued to be based on patient data collected on the MDS 2.0. This reflected the addition of 9 new RUG groups comprising a new Extensive Services plus Rehabilitation payment category, to account for the higher cost of beneficiaries requiring both rehabilitation and certain high-intensity medical services. A detailed explanation of the RUG–III refinement appears in the FY 2006 proposed rule (70 FR 29076–29079, May 19, 2005).

In FY 2011, the RUG–IV classification system was implemented and included 66 groups for case-mix classification based on patient data collected on the newest version of the Resident Assessment Instrument, MDS 3.0. A detailed explanation of the RUG–IV model appears in the FY 2010 proposed rule (74 FR 22220–22238, May 12, 2009).

In the May 12, 1998 interim final rule with comment period (63 FR 26252, 26256), we explained how the RUG–III system was used to place SNF patients into one of 44 patient groups or subcategories used for payment. The RUG category of Medium Rehabilitation (Medium Rehab) was explained in conjunction with the RUG categories of High and Very High Rehabilitation. Among other requirements specific to each category, ''all three require at least 5 days per week of skilled rehabilitative therapy, but they are split according to weekly treatment time'' (63 FR 26258). To qualify for Medium Rehab, a patient also needs to receive at least 150 minutes of therapy of any combination of the three rehabilitation disciplines: physical therapy, occupational therapy, and speech therapy.

Subsequently, across all iterations of the SNF PPS (including the RUG refinement in FY 2006 and the transition from RUG–III to RUG–IV in FY 2011), the criteria for classification into the Medium Rehab category remained the same. As set forth in the FY 2010 final rule (74 FR 40389), to be classified into the Medium Rehab category under RUG III or RUG IV, the resident must receive ''5 days any combination of 3 rehabilitation disciplines.'' In order for the SNF resident to qualify for the Medium Rehab or Medium Rehab plus Extensive Services category, he or she must receive five distinct calendar days of therapy within a 7-day time period (and at least 150 minutes of therapy across that time as well). This reflects the SNF level of care requirement under § 409.31(b)(1) that skilled services must be needed and received on a daily basis, and the provision at § 409.34(a)(2) which specifies that the ''daily basis'' criterion can be met by skilled rehabilitation services that are needed and provided at least 5 days per week. Further, the payment rates for these RUG groups were based on staff time over the requisite number of distinct therapy days. For example, the policy would be implemented correctly if a patient received a total of 150 minutes of therapy in the form of physical therapy on Monday and Wednesday, occupational therapy on Sunday and Tuesday, and speech therapy on Friday. In this example, therapy services are being provided over a separate and distinct 5-day period (Sunday, Monday, Tuesday, Wednesday, and Friday). Similarly, 5 distinct calendar days of

therapy are required to classify into the High, Very High, and Ultra High Rehabilitation categories. The amount of therapy provided over the 7-day look-back period is currently recorded on the MDS 3.0 in section O, item O0400A, O0400B, and O0400C.

Medium Rehab and Medium Rehab Plus Extensive Services qualifiers remained the same under the SNF PPS from 1998 until the present; however, the MDS did not contain the appropriate items to permit providers to report the number of distinct calendar days of therapy that a particular resident receives during a given week, inadvertently allowing residents who do not meet the Medium Rehab and Medium Rehab Plus Extensive Services qualifiers (under the intended policy as discussed above) to classify inappropriately into those RUG categories. For example, a resident receives 150 minutes of therapy in the form of physical therapy and occupational therapy on Monday (one session of physical therapy and one session of occupational therapy) and Wednesday (one session of physical therapy and one session of occupational therapy) and speech therapy on Friday. The intent of the Medium Rehab classification criteria is for such a resident not to classify into the Medium Rehab RUG category, since he or she only received therapy on 3 days (Monday, Wednesday, and Friday) during the 7-day look-back period for this PPS assessment. However, the MDS item set only requires the SNF to record the number of days therapy was received by each therapy discipline during that 7-day look-back period, without distinguishing between distinct calendar days. Thus, in the example above, the SNF would record on the MDS: 2 days of physical therapy, 2 days of occupational therapy, and 1 day of speech therapy. Currently, the RUG grouper adds these days together, allowing the resident described above to be classified into the Medium Rehab category even though the resident did not actually receive 5 distinct calendar days of therapy as required by the criteria. This resident would not meet the classification criteria for the Medium Rehab category as they were intended to be applied.

In rare instances, the same issue can occur with the Low Rehabilitation (Low Rehab) and Low Rehab Plus Extensive Services categories, which require rehabilitation services for at least 45 minutes a week with three days of any combination of the three rehabilitation disciplines (and restorative nursing 6 days per week). Similar to the Medium Rehab classification criteria, the intent here, as well, is to require distinct calendar days of therapy during the 7-day look-back period (in this case, 3 distinct calendar days of therapy). For example, this policy would be implemented correctly if a resident received a total of 90 minutes of therapy in the form of physical therapy on Monday and Wednesday, occupational therapy on Wednesday and Friday, and speech therapy on Friday. In this example, therapy services are being provided over 3 distinct calendar days (Monday, Wednesday, and Friday). However, as with the Medium Rehab category, it is possible for certain residents who do not meet the Low Rehab qualifiers under the intended policy to classify inappropriately into the Low Rehab category. For example, if a resident were to receive 90 minutes of therapy in the form of physical therapy and occupational therapy on Monday, and physical therapy and speech therapy on Tuesday, this patient would only have received therapy for 2 distinct days in that 7-day look-back period; however, based on the information currently recorded on the MDS, the patient would still be classified in a Low Rehab RUG.

As explained above, we are clarifying that our classification criteria for the Rehabilitation RUG categories require that the resident receive the requisite number of distinct calendar days of therapy to be classified into the Rehabilitation RUG category. However, the MDS item set currently does not contain an item that permits SNFs to report the total number of distinct calendar days of therapy provided by all rehabilitation disciplines, allowing some residents to be classified into Rehabilitation RUG categories when they do not actually meet our classification criteria. To permit facilities to report the number of distinct calendar days that a resident receives therapy, and to permit implementation of our Rehabilitation RUG classification criteria as intended, we propose to add item O0420 to the MDS Item Set, Distinct Calendar Days of Therapy. Effective October 1, 2013, facilities would be required to record under this item the number of distinct calendar days of therapy provided by all the rehabilitation disciplines over the 7-day look-back period for the current assessment, which would be used to classify the resident into the correct Rehabilitation RUG category. We invite comments on our proposal to add this item to the MDS Item Set so that we may properly implement our Rehabilitation RUG classification criteria based on the number of distinct calendar days of therapy a patient received, as described above.

D. SNF Therapy Research Project

Currently, the therapy payment rate component of the SNF PPS is based solely on the amount of therapy provided to a patient during the 7-day look-back period, regardless of the specific patient characteristics. The amount of therapy a patient receives is used to classify the resident into a RUG category, which then determines the per diem payment for that resident. CMS has contracted with Acumen, LLC and the Brookings Institution to identify potential alternatives to the existing methodology used to pay for therapy services received under the SNF PPS.

As an initial step, the project will review past research studies and policy issues related to SNF PPS therapy payment and options for improving or replacing the current system of paying for SNF therapy services received. We welcome comments and ideas on the existing methodology used to pay for therapy services under the SNF PPS. Comments may be included as part of comments on this proposed rule. We are also soliciting comments outside the comment period and these comments should be sent via email to *SNFTherapyPayments@cms.hhs.gov.* We will also regularly update the public on the progress of this project on the project Web site at *http://www.cms.gov/Medicare/Medicare-Fee-for-Service-Payment/SNFPPS/therapyresearch.html.*

VI. Provisions of the Proposed Rule and Technical Correction

As discussed in section III. of this proposed rule, this proposed rule would update the payment rates under the SNF PPS for FY 2014 as required by section 1888(e)(4)(E)(ii). Also, as discussed in section III.B.3. of this proposed rule, we propose that when the forecast error, rounded to one significant digit, is 0.5 percentage point, we would calculate the forecast error to 2 significant digits in order to determine whether the forecast error threshold has been exceeded. Further, as discussed in section III.C. of this proposed rule, we propose that upon the conversion to ICD–10–CM effective October 1, 2014, we would use the ICD–10–CM code B20 (in place of the ICD–9–CM code 042) to identify those residents for whom it is appropriate to apply the AIDS add-on established under section 511 of the MMA. In addition, as discussed in section III.D. of this proposed rule, to allow for sufficient time to assess the February 28, 2013 OMB changes to the statistical area delineations and their

ramifications, we intend to propose changes to the wage index based on the newest CBSA changes in the FY 2015 SNF PPS proposed rule. Thus, we would continue to use the previous OMB definitions (that is, those used for the FY 2013 SNF PPS update notice) for the FY 2014 SNF PPS wage index.

As discussed previously in section V.A of this proposed rule, we propose to revise and rebase the SNF market basket index to reflect a base year of FY 2010, and to use this revised and rebased market basket to determine the SNF market basket percentage increase for 2014. In addition, we propose to revise the labor-related share to reflect the relative importance of the labor-related cost weights in the proposed FY 2010-based SNF market basket. Also, as discussed in section V.C. of this proposed rule, to help ensure accuracy in grouping to the rehabilitation RUG categories, we propose to add item O0420 to the MDS Item Set, which would require facilities to record the number of distinct calendar days of therapy provided by all the rehabilitation disciplines over the 7-day look-back period for the current assessment.

In addition, as discussed earlier in this proposed rule, we are proposing to adopt an approach already being followed by other Medicare payment systems, under which the lengthy wage index tables that are currently published in the **Federal Register** as part of the annual SNF PPS rulemaking, would instead be made available exclusively through the Internet on the CMS Web site at *http://www.cms.gov/Medicare/Medicare-Fee-for-Service-Payment/SNFPPS/WageIndex.html.* To adopt this approach, we propose to revise § 413.345. Currently, § 413.345 states that CMS publishes the wage index in the **Federal Register**. We propose to revise this language, consistent with the language of the corresponding statutory authority at section 1888(e)(4)(H)(iii), to state that CMS publishes in the **Federal Register** ''the factors to be applied in making the area wage adjustment.'' Accordingly, while the annual **Federal Register** publication would continue to include a discussion of the various applicable ''factors'' applied in making the area wage adjustment (for example, the SNF PPS's use of the hospital wage index exclusive of its occupational mix adjustment), effective October 1, 2013, it would no longer include a listing of the individual wage index values themselves, which would instead be made available exclusively through the Internet on the CMS Web site.

Further, we propose to make a minor technical correction in the regulations text at § 424.11(e)(4), regarding the types of practitioners (in addition to physicians) that can sign the required SNF level of care certification and recertifications. In the calendar year (CY) 2011 Medicare Physician Fee Schedule (MPFS) final rule with comment period (75 FR 73387, 73602, 73626–27), we revised the regulations at § 424.20(e)(2) to implement section 3108 of the Affordable Care Act, which amended section 1814(a)(2) of the Act, by adding physician assistants to the provision authorizing nurse practitioners and clinical nurse specialists to perform this function. However, we inadvertently neglected to make a conforming revision in the regulations text at § 424.11(e)(4), an omission that we now propose to rectify.

VII. Collection of Information Requirements

Under the Paperwork Reduction Act of 1995 (PRA), we are required to provide a 60-day notice in the **Federal Register** and solicit public comments before a collection of information requirement is submitted to the Office of Management and Budget (OMB) for review and approval. In order to evaluate fairly whether an information collection should be approved by OMB, section 3506(c)(2)(A) of the PRA requires that we solicit comments on the following issues:

- The need for the information collection and its usefulness in carrying out the proper functions of our agency.
- The accuracy of our estimate of the information collection burden.
- The quality, utility, and clarity of the information to be collected.
- Recommendations to minimize the information collection burden on the affected public, including automated collection techniques.

We are soliciting public comment on each of the section 3506(c)(2)(A)-required issues for the following information collection requirements (ICRs):

ICRs Regarding Nursing Home and Swing Bed PPS Item Sets

Under sections 4204(b) and 4214(d) of the Omnibus Budget Reconciliation Act of 1987 (OBRA 1987, Pub. L. 100–203 enacted on December 22, 1987), the submission and retention of resident assessment data for purposes of carrying out OBRA 1987 are not subject to the PRA. While certain data items that are collected under the SNF resident assessment instrument (or MDS 3.0) fall under the OBRA 1987 exemption, MDS 3.0's PPS-related item sets are outside the scope of OBRA 1987 and require PRA consideration.

As discussed in section V.C. of the preamble, this rule proposes to add PPS-related Item O0420 to the MDS 3.0 form to capture the number of distinct calendar days a SNF resident has received therapy in a seven-day look-back period. The Item would be added to allow the RUG–IV grouper software to calculate more accurately the number of therapy days a SNF resident has received in order to place him or her into the correct RUG–IV payment group. The Item would not be added as the result of any change in statute or policy; rather, it would be added to ensure that our existing Rehabilitation RUG classification policies are properly implemented as intended.

While we are proposing to add Item O0420 to the MDS 3.0 form, we do not believe this action will cause any measurable adjustments to our burden estimates. Consequently, we are not revising the burden estimates that have been approved under OCN 0938–1140 (CMS–R–250) for the Nursing Home and Swing Bed PPS Item Sets.

Submission of PRA-Related Comments

We have submitted a copy of this proposed rule to OMB for its review of the rule's information collection and recordkeeping requirements. These requirements are not effective until they have been approved by the OMB.

To obtain copies of the supporting statement and any related forms for the proposed paperwork collection referenced above, access CMS' Web site at *http://www.cms.hhs.gov/PaperworkReductionActof1995,* or email your request, including your address, phone number, OMB number, and CMS document identifier, to *Paperwork@cms.hhs.gov,* or call the Reports Clearance Office on (410) 786–1326.

We invite public comments on this proposed information collection and recordkeeping requirement. If you comment on this proposed information collection and recordkeeping requirement, please do either of the following:

1. Submit your comments electronically as specified in the **ADDRESSES** section of this proposed rule; or

2. Submit your comments to the Office of Information and Regulatory Affairs, Office of Management and Budget, Attention: CMS Desk Officer, (CMS–1446–P) Fax: (202) 395–6974; or Email: *OIRA_submission@omb.eop.gov.*

VIII. Response to Comments

Because of the large number of public comments we normally receive on **Federal Register** documents, we are not able to acknowledge or respond to them individually. We will consider all comments we receive by the date and time specified in the **DATES** section of this preamble, and when we proceed with a subsequent document, we will respond to the comments in the preamble to that document.

IX. Economic Analyses

A. Regulatory Impact Analysis

1. Introduction

We have examined the impacts of this proposed rule as required by Executive Order 12866 on Regulatory Planning and Review (September 30, 1993), Executive Order 13563 on Improving Regulation and Regulatory Review (January 18, 2011), the Regulatory Flexibility Act (RFA) (September 19, 1980, Pub. L. 96–354), section 1102(b) of the Act, section 202 of the Unfunded Mandates Reform Act of 1995 (UMRA, March 22, 1995; Pub. L. 104–4), Executive Order 13132 on Federalism (August 4, 1999), and the Congressional Review Act (5 U.S.C. 804(2)).

Executive Orders 12866 and 13563 direct agencies to assess all costs and benefits of available regulatory alternatives and, if regulation is necessary, to select regulatory approaches that maximize net benefits (including potential economic, environmental, public health and safety effects, distributive impacts, and equity). Executive Order 13563 emphasizes the importance of quantifying both costs and benefits, of reducing costs, of harmonizing rules, and of promoting flexibility. This rule has been designated an economically significant rule, under section 3(f)(1) of Executive Order 12866. Accordingly, we have prepared a regulatory impact analysis (RIA) as further discussed below. Also, the rule has been reviewed by OMB.

2. Statement of Need

This proposed rule would update the SNF prospective payment rates for FY 2014 as required under section 1888(e)(4)(E) of the Act. It also responds to section 1888(e)(4)(H) of the Act, which requires the Secretary to ''provide for publication in the **Federal Register**'' before the August 1 that precedes the start of each fiscal year, of the unadjusted federal per diem rates, the case-mix classification system, and the factors to be applied in making the area wage adjustment. As these statutory provisions prescribe a detailed methodology for calculating and disseminating payment rates under the SNF PPS, we do not have the discretion to adopt an alternative approach.

3. Overall Impacts

This proposed rule sets forth proposed updates of the SNF PPS rates contained in the update notice for FY 2013 (77 FR 46214). Based on the above, we estimate that the aggregate impact would be an increase of $500 million in payments to SNFs, resulting from the SNF market basket update to the payment rates, as adjusted by the MFP adjustment and forecast error correction. The impact analysis of this proposed rule represents the projected effects of the changes in the SNF PPS from FY 2013 to FY 2014. Although the best data available are utilized, there is no attempt to predict behavioral responses to these changes, or to make adjustments for future changes in such variables as days or case-mix.

Certain events may occur to limit the scope or accuracy of our impact analysis, as this analysis is future-oriented and, thus, very susceptible to forecasting errors due to certain events that may occur within the assessed impact time period. Some examples of possible events may include newly-legislated general Medicare program funding changes by the Congress, or changes specifically related to SNFs. In addition, changes to the Medicare program may continue to be made as a result of previously-enacted legislation, or new statutory provisions. Although these changes may not be specific to the SNF PPS, the nature of the Medicare program is such that the changes may interact and, thus, the complexity of the interaction of these changes could make it difficult to predict accurately the full scope of the impact upon SNFs.

In accordance with sections 1888(e)(4)(E) and 1888(e)(5) of the Act, we update the FY 2013 payment rates by a factor equal to the market basket index percentage change adjusted by the FY 2012 forecast error adjustment (if applicable) and the MFP adjustment to determine the payment rates for FY 2014. As discussed previously, for FY 2012 and each subsequent FY, as required by section 1888(e)(5)(B) of the Act as amended by section 3401(b) of the Affordable Care Act, the market basket percentage is reduced by the MFP adjustment. The special AIDS add-on established by section 511 of the MMA remains in effect until ''. . . such date as the Secretary certifies that there is an appropriate adjustment in the case mix. . . .'' We have not provided a separate impact analysis for the MMA provision. Our latest estimates indicate that there are fewer than 4,100 beneficiaries who qualify for the add-on payment for residents with AIDS. The impact to Medicare is included in the ''total'' column of Table 22. In updating the SNF rates for FY 2014, we made a number of standard annual revisions and clarifications mentioned elsewhere in this proposed rule (for example, the update to the wage and market basket indexes used for adjusting the federal rates).

The annual update set forth in this proposed rule applies to SNF payments in FY 2014. Accordingly, the analysis that follows only describes the impact of this single year. In accordance with the requirements of the Act, we will publish a notice or rule for each subsequent FY that will provide for an update to the SNF payment rates and include an associated impact analysis.

4. Detailed Economic Analysis

The FY 2014 impacts appear in Table 22. Using the most recently available data, in this case FY 2012, we apply the current FY 2013 wage index and labor-related share value to the number of payment days to simulate FY 2013 payments. Then, using the same FY 2012 data, we apply the FY 2014 wage index and labor-related share value to simulate FY 2014 payments. We tabulate the resulting payments according to the classifications in Table 22, e.g. facility type, geographic region, facility ownership, and compare the difference between current and proposed payments to determine the overall impact. The breakdown of the various categories of data in the table follows.

The first column shows the breakdown of all SNFs by urban or rural status, hospital-based or freestanding status, census region, and ownership.

The first row of figures describes the estimated effects of the various changes on all facilities. The next six rows show the effects on facilities split by hospital-based, freestanding, urban, and rural categories. The urban and rural designations are based on the location of the facility under the CBSA designation. The next nineteen rows show the effects on facilities by urban versus rural status by census region. The last three rows show the effects on facilities by ownership (that is, government, profit, and non-profit status).

The second column in the table shows the number of facilities in the impact database.

The third column of the table shows the effect of the annual update to the wage index. This represents the effect of using the most recent wage data

available. The total impact of this change is zero percent; however, there are distributional effects of the change.

The fourth column shows the effect of all of the changes on the FY 2014 payments. The update of 1.4 percent (consisting of the market basket increase of 2.3 percentage points, reduced by the 0.5 percentage point forecast error correction and further reduced by the 0.4 percentage point MFP adjustment) is constant for all providers and, though not shown individually, is included in the total column. It is projected that aggregate payments will increase by 1.4 percent, assuming facilities do not change their care delivery and billing practices in response.

As illustrated in Table 22, the combined effects of all of the changes vary by specific types of providers and by location. Though all facilities would experience payment increases, the projected impact on providers for FY 2014 varies due to the impact of the wage index update. For example, due to changes from updating the wage index, providers in the rural Pacific region would experience a 2.5 percent increase in FY 2014 total payments and providers in the urban East South Central region would experience a 0.7 percent increase in FY 2014 total payments.

TABLE 22—RUG–IV PROJECTED IMPACT TO THE SNF PPS FOR FY 2014

	Number of facilities FY 2014	Update wage data (percent)	Total FY 2014 change (percent)
Group:			
Total	15,376	0.0	1.4
Urban	10,578	0.1	1.5
Rural	4,798	−0.3	1.1
Hospital based urban	757	0.2	1.6
Freestanding urban	9,821	0.1	1.5
Hospital based rural	402	−0.3	1.1
Freestanding rural	4,396	−0.3	1.1
Urban by region:			
New England	804	0.6	2.0
Middle Atlantic	1,452	0.9	2.3
South Atlantic	1,740	−0.5	0.8
East North Central	2,048	−0.3	1.1
East South Central	525	−0.7	0.7
West North Central	868	−0.6	0.8
West South Central	1,240	−0.2	1.2
Mountain	490	0.2	1.6
Pacific	1,405	0.8	2.2
Outlying	6	0.1	1.5
Rural by region:			
New England	153	0.4	1.8
Middle Atlantic	262	−0.2	1.2
South Atlantic	608	−0.5	0.9
East North Central	928	−0.8	0.6
East South Central	551	−0.7	0.7
West North Central	1,114	0.6	2.0
West South Central	813	−0.8	0.6
Mountain	246	0.3	1.7
Pacific	123	1.0	2.5
Ownership:			
Government	830	0.2	1.6
Profit	10,722	0.0	1.4
Non-profit	3,824	0.0	1.4

Note: The Total column includes the 2.3 percent market basket increase, reduced by the 0.5 percentage point forecast error correction and further reduced by the 0.4 percentage point MFP adjustment. Additionally, we found no SNFs in rural outlying areas.

5. Alternatives Considered

As described above, we estimate that the aggregate impact for FY 2014 would be an increase of $500 million in payments to SNFs, resulting from the SNF market basket update to the payment rates, as adjusted by the forecast error correction and the MFP adjustment.

Section 1888(e) of the Act establishes the SNF PPS for the payment of Medicare SNF services for cost reporting periods beginning on or after July 1, 1998. This section of the statute prescribes a detailed formula for calculating payment rates under the SNF PPS, and does not provide for the use of any alternative methodology. It specifies that the base year cost data to be used for computing the SNF PPS payment rates must be from FY 1995 (October 1, 1994, through September 30, 1995). In accordance with the statute, we also incorporated a number of elements into the SNF PPS (for example, case-mix classification methodology, a market basket index, a wage index, and the urban and rural distinction used in the development or adjustment of the federal rates). Further, section 1888(e)(4)(H) of the Act specifically requires us to disseminate the payment rates for each new FY through the **Federal Register**, and to do so before the August 1 that precedes the start of the new FY. Accordingly, we are not pursuing alternatives with respect to the payment methodology as discussed above.

6. Accounting Statement

As required by OMB Circular A–4 (available online at *www.whitehouse.gov/sites/default/files/omb/assets/regulatory_matters_pdf/a-4.pdf*), in Table 23, we have prepared an accounting statement showing the classification of the expenditures

associated with the provisions of this proposed rule. Table 23 provides our best estimate of the possible changes in Medicare payments under the SNF PPS as a result of the policies in this proposed rule, based on the data for 15,376 SNFs in our database. All expenditures are classified as transfers to Medicare providers (that is, SNFs).

TABLE 23—ACCOUNTING STATEMENT: CLASSIFICATION OF ESTIMATED EXPENDITURES, FROM THE 2013 SNF PPS FISCAL YEAR TO THE 2014 SNF PPS FISCAL YEAR

Category	Transfers
Annualized Monetized Transfers.	$500 million.*
From Whom To Whom?	Federal Government to SNF Medicare Providers.

* The net increase of $500 million in transfer payments is a result of the MFP-adjusted market basket increase of $500 million.

7. Conclusion

This proposed rule sets forth updates of the SNF PPS rates contained in the update notice for FY 2013 (77 FR 46214). Based on the above, we estimate the overall estimated payments for SNFs in FY 2014 are projected to increase by $500 million, or 1.4 percent, compared with those in FY 2013. We estimate that in FY 2014 under RUG–IV, SNFs in urban and rural areas would experience, on average, a 1.5 and 1.1 percent increase, respectively, in estimated payments compared with FY 2013. Providers in the rural Pacific region would experience the largest estimated increase in payments of approximately 2.5 percent. Providers in the rural West South Central region would experience the smallest increase in payments of 0.6 percent.

B. Regulatory Flexibility Act Analysis

The RFA requires agencies to analyze options for regulatory relief of small entities, if a rule has a significant impact on a substantial number of small entities. For purposes of the RFA, small entities include small businesses, non-profit organizations, and small governmental jurisdictions. Most SNFs and most other providers and suppliers are small entities, either by their non-profit status or by having revenues of $25.5 million or less in any 1 year. For purposes of the RFA, approximately 91 percent of SNFs are considered small businesses according to the Small Business Administration's latest size standards (NAICS 623110), with total revenues of $25.5 million or less in any 1 year. (For details, see the Small Business Administration's Web site at *http://www.sba.gov/category/navigation-structure/contracting/contracting-officials/eligibility-size-standards*). Individuals and States are not included in the definition of a small entity. In addition, approximately 25 percent of SNFs classified as small entities are non-profit organizations. Finally, the estimated number of small business entities does not distinguish provider establishments that are within a single firm and, therefore, the number of SNFs classified as small entities may be higher than the estimate above.

This proposed rule sets forth updates of the SNF PPS rates contained in the update notice for FY 2013 (77 FR 46214). Based on the above, we estimate that the aggregate impact would be an increase of $500 million in payments to SNFs, resulting from the SNF market basket update to the payment rates, as adjusted by the forecast error correction and the MFP adjustment. While it is projected in Table 22 that all providers would experience a net increase in payments, we note that some individual providers within the same region or group may experience different impacts on payments than others due to the distributional impact of the FY 2014 wage indexes and the degree of Medicare utilization.

Guidance issued by the Department of Health and Human Services on the proper assessment of the impact on small entities in rulemakings, utilizes a cost or revenue impact of 3 to 5 percent as a significance threshold under the RFA. According to MedPAC, Medicare covers approximately 12 percent of total patient days in freestanding facilities and 23 percent of facility revenue (Report to the Congress: Medicare Payment Policy, March 2013, available at *http://www.medpac.gov/documents/Mar13_EntireReport.pdf*). However, it is worth noting that the distribution of days and payments is highly variable. That is, the majority of SNFs have significantly lower Medicare utilization (Report to the Congress: Medicare Payment Policy, March 2013, available at *http://www.medpac.gov/documents/Mar13_EntireReport.pdf*). As a result, for most facilities, when all payers are included in the revenue stream, the overall impact on total revenues should be substantially less than those impacts presented in Table 22. As indicated in Table 22, the effect on facilities is projected to be an aggregate positive impact of 1.4 percent. As the overall impact on the industry as a whole, and thus on small entities specifically, is less than the 3 to 5 percent threshold discussed above, the Secretary has determined that this proposed rule would not have a significant impact on a substantial number of small entities.

In addition, section 1102(b) of the Act requires us to prepare a regulatory impact analysis if a rule may have a significant impact on the operations of a substantial number of small rural hospitals. This analysis must conform to the provisions of section 603 of the RFA. For purposes of section 1102(b) of the Act, we define a small rural hospital as a hospital that is located outside of a Metropolitan Statistical Area and has fewer than 100 beds. This proposed rule would affect small rural hospitals that (a) furnish SNF services under a swing-bed agreement or (b) have a hospital-based SNF. We anticipate that the impact on small rural hospitals would be similar to the impact on SNF providers overall. Moreover, as noted in the FY 2012 final rule (76 FR 48539), the category of small rural hospitals would be included within the analysis of the impact of this proposed rule on small entities in general. As indicated in Table 22, the effect on facilities is projected to be an aggregate positive impact of 1.4 percent. As the overall impact on the industry as a whole is less than the 3 to 5 percent threshold discussed above, the Secretary has determined that this proposed rule would not have a significant impact on a substantial number of small rural hospitals.

C. Unfunded Mandates Reform Act Analysis

Section 202 of the Unfunded Mandates Reform Act of 1995 (UMRA) also requires that agencies assess anticipated costs and benefits before issuing any rule whose mandates require spending in any 1 year of $100 million in 1995 dollars, updated annually for inflation. In 2013, that threshold is approximately $141 million. This proposed rule would not impose spending costs on State, local, or tribal governments in the aggregate, or by the private sector, of $141 million.

D. Federalism Analysis

Executive Order 13132 establishes certain requirements that an agency must meet when it promulgates a proposed rule (and subsequent final rule) that impose substantial direct requirement costs on State and local governments, preempts State law, or otherwise has federalism implications. This proposed rule would have no substantial direct effect on State and local governments, preempt State law, or otherwise have federalism implications.

List of Subjects

42 CFR Part 413

Health facilities, Kidney diseases, Medicare, Reporting and recordkeeping requirements.

42 CFR Part 424

Emergency medical services, Health facilities, Health professions, Medicare, Reporting and recordkeeping requirements.

For the reasons set forth in the preamble, the Centers for Medicare & Medicaid Services proposes to amend 42 CFR chapter IV as set forth below:

PART 413—PRINCIPLES OF REASONABLE COST REIMBURSEMENT; PAYMENT FOR END–STAGE RENAL DISEASE SERVICES; OPTIONAL PROSPECTIVELY DETERMINED PAYMENT RATES FOR SKILLED NURSING FACILITIES

■ 1. The authority citation for part 413 continues to read as follows:

Authority: Secs. 1102, 1812(d), 1814(b), 1815, 1833(a), (i), and (n), 1861(v), 1871, 1881, 1883, and 1886 of the Social Security Act (42 U.S.C. 1302, 1395d(d), 1395f(b), 1395g, 1395l(a), (i), and (n), 1395x(v), 1395hh, 1395rr, 1395tt, and 1395ww); sec. 124 of Pub. L. 106–133 (113 Stat. 1501A–332) and sec. 3201 of Pub. L. 112–96 (126 Stat. 156).

■ 2. Section 413.345 is revised to read as follows:

§ 413.345 Publication of Federal prospective payment rates.

CMS publishes information pertaining to each update of the Federal payment rates in the **Federal Register**. This information includes the standardized Federal rates, the resident classification system that provides the basis for case-mix adjustment (including the designation of those specific Resource Utilization Groups under the resident classification system that represent the required SNF level of care, as provided in § 409.30 of this chapter), and the factors to be applied in making the area wage adjustment. This information is published before May 1 for the fiscal year 1998 and before August 1 for the fiscal years 1999 and after.

PART 424—CONDITIONS FOR MEDICARE PAYMENT

■ 3. The authority citation for part 424 continues to read as follows:

Authority: Secs. 1102 and 1871 of the Social Security Act (42 U.S.C. 1302 and 1395hh).

■ 4. Section 424.11 is amended by revising paragraph (e)(4) to read as follows:

§ 424.11 General procedures.

* * * * *

(e) * * *

(4) A nurse practitioner or clinical nurse specialist as defined in paragraph (e)(5) or (e)(6) of this section, or a physician assistant as defined in section 1861(aa)(5) of the Act, in the circumstances specified in § 424.20(e).

* * * * *

Authority: (Catalog of Federal Domestic Assistance Program No. 93.773, Medicare—Hospital Insurance; and Program No. 93.774, Medicare—Supplementary Medical Insurance Program)

Dated: April 4, 2013.

Marilyn Tavenner,

Acting Administrator, Centers for Medicare & Medicaid Services.

Approved: April 25, 2013.

Kathleen Sebelius,

Secretary.

Note: The following addendum will not appear in the Code of Federal Regulations.

Addendum—FY 2014 CBSA Wage Index Tables

In this addendum, we provide the wage index tables referred to in the preamble to this proposed rule. Tables A and B display the CBSA-based wage index values for urban and rural providers. As noted previously in this proposed rule, we are currently proposing to take an approach already being followed by other Medicare payment systems, whereby for SNF PPS rules and notices published on or after October 1, 2013, these wage index tables would henceforth be made available exclusively through the Internet on the CMS Web site rather than being published in the **Federal Register** as part of the annual SNF PPS rulemaking.

TABLE A—FY 2014 WAGE INDEX FOR URBAN AREAS BASED ON CBSA LABOR MARKET AREAS

CBSA Code	Urban area (constituent counties)	Wage index
10180 ..	Abilene, TX	0.8260
	Callahan County, TX	
	Jones County, TX	
	Taylor County, TX	
10380 ..	Aguadilla-Isabela-San Sebastián, PR.	0.3662
	Aguada Municipio, PR	
	Aguadilla Municipio, PR	
	Añasco Municipio, PR	
	Isabela Municipio, PR	
	Lares Municipio, PR	
	Moca Municipio, PR	
	Rincón Municipio, PR	
	San Sebastián Municipio, PR	
10420 ..	Akron, OH	0.8485
	Portage County, OH	
	Summit County, OH	
10500 ..	Albany, GA	0.8750
	Baker County, GA	
	Dougherty County, GA	
	Lee County, GA	
	Terrell County, GA	
	Worth County, GA	
10580 ..	Albany-Schenectady-Troy, NY.	0.8636
	Albany County, NY	
	Rensselaer County, NY	
	Saratoga County, NY	
	Schenectady County, NY	
	Schoharie County, NY	
10740 ..	Albuquerque, NM	0.9704
	Bernalillo County, NM	
	Sandoval County, NM	
	Torrance County, NM	
	Valencia County, NM	
10780 ..	Alexandria, LA	0.7821
	Grant Parish, LA	
	Rapides Parish, LA	
10900 ..	Allentown-Bethlehem-Easton, PA–NJ.	0.9208
	Warren County, NJ	
	Carbon County, PA	
	Lehigh County, PA	
	Northampton County, PA	
11020 ..	Altoona, PA	0.9140
	Blair County, PA	
11100 ..	Amarillo, TX	0.8993
	Armstrong County, TX	
	Carson County, TX	
	Potter County, TX	
	Randall County, TX	
11180 ..	Ames, IA	0.9465
	Story County, IA	
11260 ..	Anchorage, AK	1.2259
	Anchorage Municipality, AK	
	Matanuska-Susitna Borough, AK	
11300 ..	Anderson, IN	0.9694
	Madison County, IN	
11340 ..	Anderson, SC	0.8803
	Anderson County, SC	
11460 ..	Arbor, MI	1.0125
	Washtenaw County, MI	
11500 ..	Anniston-Oxford, AL	0.7369
	Calhoun County, AL	
11540 ..	Appleton, WI	0.9485
	Calumet County, WI	
	Outagamie County, WI	
11700 ..	Asheville, NC	0.8508
	Buncombe County, NC	
	Haywood County, NC	
	Henderson County, NC	
	Madison County, NC	
12020 ..	Athens-Clarke County, GA.	0.9284
	Clarke County, GA	
	Madison County, GA	
	Oconee County, GA	
	Oglethorpe County, GA	
12060 ..	Atlanta-Sandy Springs-Marietta, GA.	0.9465
	Barrow County, GA	

TABLE A—FY 2014 WAGE INDEX FOR URBAN AREAS BASED ON CBSA LABOR MARKET AREAS—Continued

CBSA Code	Urban area (constituent counties)	Wage index
	Bartow County, GA	
	Butts County, GA	
	Carroll County, GA	
	Cherokee County, GA	
	Clayton County, GA	
	Cobb County, GA	
	Coweta County, GA	
	Dawson County, GA	
	DeKalb County, GA	
	Douglas County, GA	
	Fayette County, GA	
	Forsyth County, GA	
	Fulton County, GA	
	Gwinnett County, GA	
	Haralson County, GA	
	Heard County, GA	
	Henry County, GA	
	Jasper County, GA	
	Lamar County, GA	
	Meriwether County, GA	
	Newton County, GA	
	Paulding County, GA	
	Pickens County, GA	
	Pike County, GA	
	Rockdale County, GA	
	Spalding County, GA	
	Walton County, GA	
12100 ..	Atlantic City-Hammonton, NJ.	1.2310
	Atlantic County, NJ	
12220 ..	Auburn-Opelika, AL	0.7802
	Lee County, AL	
12260 ..	Augusta-Richmond County, GA–SC.	0.9189
	Burke County, GA	
	Columbia County, GA	
	McDuffie County, GA	
	Richmond County, GA	
	Aiken County, SC	
	Edgefield County, SC	
12420 ..	Austin-Round Rock, TX	0.9616
	Bastrop County, TX	
	Caldwell County, TX	
	Hays County, TX	
	Travis County, TX	
	Williamson County, TX	
12540 ..	Bakersfield, CA	1.1730
	Kern County, CA	
12580 ..	Baltimore-Towson, MD	0.9916
	Anne Arundel County, MD	
	Baltimore County, MD	
	Carroll County, MD	
	Harford County, MD	
	Howard County, MD	
	Queen Anne's County, MD	
	Baltimore City, MD	
12620 ..	Bangor, ME	0.9751
	Penobscot County, ME	
12700 ..	Barnstable Town, MA ...	1.3062
	Barnstable County, MA	
12940 ..	Baton Rouge, LA	0.8050
	Ascension Parish, LA	
	East Baton Rouge Parish, LA	
	East Feliciana Parish, LA	
	Iberville Parish, LA	

TABLE A—FY 2014 WAGE INDEX FOR URBAN AREAS BASED ON CBSA LABOR MARKET AREAS—Continued

CBSA Code	Urban area (constituent counties)	Wage index
	Livingston Parish, LA	
	Pointe Coupee Parish, LA	
	St. Helena Parish, LA	
	West Baton Rouge Parish, LA	
	West Feliciana Parish, LA	
12980 ..	Battle Creek, MI	0.9763
	Calhoun County, MI	
13020 ..	Bay City, MI	0.9526
	Bay County, MI	
13140 ..	Beaumont-Port Arthur, TX.	0.8634
	Hardin County, TX	
	Jefferson County, TX	
	Orange County, TX	
13380 ..	Bellingham, WA	1.1940
	Whatcom County, WA	
13460 ..	Bend, OR	1.1857
	Deschutes County, OR	
13644 ..	Bethesda-Frederick-Gaithersburg, MD.	1.0348
	Frederick County, MD	
	Montgomery County, MD	
13740 ..	Billings, MT	0.8727
	Carbon County, MT	
	Yellowstone County, MT	
13780 ..	Binghamton, NY	0.7863
	Broome County, NY	
	Tioga County, NY	
13820 ..	Birmingham-Hoover, AL	0.8395
	Bibb County, AL	
	Blount County, AL	
	Chilton County, AL	
	Jefferson County, AL	
	St. Clair County, AL	
	Shelby County, AL	
	Walker County, AL	
13900 ..	Bismarck, ND	0.7312
	Burleigh County, ND	
	Morton County, ND	
13980 ..	Blacksburg-Christiansburg-Radford, VA.	0.8354
	Giles County, VA	
	Montgomery County, VA	
	Pulaski County, VA	
	Radford City, VA	
14020 ..	Bloomington, IN	0.9343
	Greene County, IN	
	Monroe County, IN	
	Owen County, IN	
14060 ..	Bloomington-Normal, IL	0.9349
	McLean County, IL	
14260 ..	Boise City-Nampa, ID ...	0.9298
	Ada County, ID	
	Boise County, ID	
	Canyon County, ID	
	Gem County, ID	
	Owyhee County, ID	
14484 ..	Boston-Quincy, MA	1.2505
	Norfolk County, MA	
	Plymouth County, MA	
	Suffolk County, MA	
14500 ..	Boulder, CO	0.9891
	Boulder County, CO	
14540 ..	Bowling Green, KY	0.8314

TABLE A—FY 2014 WAGE INDEX FOR URBAN AREAS BASED ON CBSA LABOR MARKET AREAS—Continued

CBSA Code	Urban area (constituent counties)	Wage index
	Edmonson County, KY	
	Warren County, KY	
14740 ..	Bremerton-Silverdale, WA.	1.0311
	Kitsap County, WA	
14860 ..	Bridgeport-Stamford-Norwalk, CT.	1.3287
	Fairfield County, CT	
15180 ..	Brownsville-Harlingen, TX.	0.8213
	Cameron County, TX	
15260 ..	Brunswick, GA	0.7716
	Brantley County, GA	
	Glynn County, GA	
	McIntosh County, GA	
15380 ..	Buffalo-Niagara Falls, NY.	1.0048
	Erie County, NY	
	Niagara County, NY	
15500 ..	Burlington, NC	0.8552
	Alamance County, NC	
15540 ..	Burlington-South Burlington, VT.	1.0173
	Chittenden County, VT	
	Franklin County, VT	
	Grand Isle County, VT	
15764 ..	Cambridge-Newton-Framingham, MA.	1.1201
	Middlesex County, MA	
15804 ..	Camden, NJ	1.0297
	Burlington County, NJ	
	Camden County, NJ	
	Gloucester County, NJ	
15940 ..	Canton-Massillon, OH ...	0.8729
	Carroll County, OH	
	Stark County, OH	
15980 ..	Cape Coral-Fort Myers, FL.	0.8720
	Lee County, FL	
16020 ..	Cape Girardeau-Jackson, MO–IL.	0.9213
	Alexander County, IL	
	Bollinger County, MO	
	Cape Girardeau County, MO	
16180 ..	Carson City, NV	1.0767
	Carson City, NV	
16220 ..	Casper, WY	1.0154
	Natrona County, WY	
16300 ..	Cedar Rapids, IA	0.9001
	Benton County, IA	
	Jones County, IA	
	Linn County, IA	
16580 ..	Champaign-Urbana, IL ..	0.9450
	Champaign County, IL	
	Ford County, IL	
	Piatt County, IL	
16620 ..	Charleston, WV	0.8147
	Boone County, WV	
	Clay County, WV	
	Kanawha County, WV	
	Lincoln County, WV	
	Putnam County, WV	
16700 ..	Charleston-North Charleston-Summerville, SC.	0.9013
	Berkeley County, SC	
	Charleston County, SC	
	Dorchester County, SC	

TABLE A—FY 2014 WAGE INDEX FOR URBAN AREAS BASED ON CBSA LABOR MARKET AREAS—Continued

CBSA Code	Urban area (constituent counties)	Wage index
16740 ..	Charlotte-Gastonia-Concord, NC–SC.	0.9479
	Anson County, NC	
	Cabarrus County, NC	
	Gaston County, NC	
	Mecklenburg County, NC	
	Union County, NC	
	York County, SC	
16820 ..	Charlottesville, VA	0.8443
	Albemarle County, VA	
	Fluvanna County, VA	
	Greene County, VA	
	Nelson County, VA	
	Charlottesville City, VA	
16860 ..	Chattanooga, TN–GA	0.8499
	Catoosa County, GA	
	Dade County, GA	
	Walker County, GA	
	Hamilton County, TN	
	Marion County, TN	
	Sequatchie County, TN	
16940 ..	Cheyenne, WY	0.9534
	Laramie County, WY	
16974 ..	Chicago-Naperville-Joliet, IL.	1.0446
	Cook County, IL	
	DeKalb County, IL	
	DuPage County, IL	
	Grundy County, IL	
	Kane County, IL	
	Kendall County, IL	
	McHenry County, IL	
	Will County, IL	
17020 ..	Chico, CA	1.1637
	Butte County, CA	
17140 ..	Cincinnati-Middletown, OH–KY–IN.	0.9382
	Dearborn County, IN	
	Franklin County, IN	
	Ohio County, IN	
	Boone County, KY	
	Bracken County, KY	
	Campbell County, KY	
	Gallatin County, KY	
	Grant County, KY	
	Kenton County, KY	
	Pendleton County, KY	
	Brown County, OH	
	Butler County, OH	
	Clermont County, OH	
	Hamilton County, OH	
	Warren County, OH	
17300 ..	Clarksville, TN–KY	0.7376
	Christian County, KY	
	Trigg County, KY	
	Montgomery County, TN	
	Stewart County, TN	
17420 ..	Cleveland, TN	0.7528
	Bradley County, TN	
	Polk County, TN	
17460 ..	Cleveland-Elyria-Mentor, OH.	0.9306
	Cuyahoga County, OH	
	Geauga County, OH	
	Lake County, OH	
	Lorain County, OH	
	Medina County, OH	
17660 ..	Coeur d'Alene, ID	0.9102
	Kootenai County, ID	
17780 ..	College Station-Bryan, TX.	0.9537
	Brazos County, TX	
	Burleson County, TX	
	Robertson County, TX	
17820 ..	Colorado Springs, CO	0.9321
	El Paso County, CO	
	Teller County, CO	
17860 ..	Columbia, MO	0.8231
	Boone County, MO	
	Howard County, MO	
17900 ..	Columbia, SC	0.8680
	Calhoun County, SC	
	Fairfield County, SC	
	Kershaw County, SC	
	Lexington County, SC	
	Richland County, SC	
	Saluda County, SC	
17980 ..	Columbus, GA–AL	0.7896
	Russell County, AL	
	Chattahoochee County, GA	
	Harris County, GA	
	Marion County, GA	
	Muscogee County, GA	
18020 ..	Columbus, IN	0.9860
	Bartholomew County, IN	
18140 ..	Columbus, OH	0.9700
	Delaware County, OH	
	Fairfield County, OH	
	Franklin County, OH	
	Licking County, OH	
	Madison County, OH	
	Morrow County, OH	
	Pickaway County, OH	
	Union County, OH	
18580 ..	Corpus Christi, TX	0.8469
	Aransas County, TX	
	Nueces County, TX	
	San Patricio County, TX	
18700 ..	Corvallis, OR	1.0641
	Benton County, OR	
18880 ..	Crestview-Fort Walton Beach-Destin, FL.	0.8948
	Okaloosa County, FL	
19060 ..	Cumberland, MD–WV	0.8088
	Allegany County, MD	
	Mineral County, WV	
19124 ..	Dallas-Plano-Irving, TX	0.9872
	Collin County, TX	
	Dallas County, TX	
	Delta County, TX	
	Denton County, TX	
	Ellis County, TX	
	Hunt County, TX	
	Kaufman County, TX	
	Rockwall County, TX	
19140 ..	Dalton, GA	0.8662
	Murray County, GA	
	Whitfield County, GA	
19180 ..	Danville, IL	0.9500
	Vermilion County, IL	
19260 ..	Danville, VA	0.7921
	Pittsylvania County, VA	
	Danville City, VA	
19340 ..	Davenport-Moline-Rock Island, IA–IL.	0.9345
	Henry County, IL	
	Mercer County, IL	
	Rock Island County, IL	
	Scott County, IA	
19380 ..	Dayton, OH	0.8941
	Greene County, OH	
	Miami County, OH	
	Montgomery County, OH	
	Preble County, OH	
19460 ..	Decatur, AL	0.7195
	Lawrence County, AL	
	Morgan County, AL	
19500 ..	Decatur, IL	0.7946
	Macon County, IL	
19660 ..	Deltona-Daytona Beach-Ormond Beach, FL.	0.8596
	Volusia County, FL	
19740 ..	Denver-Aurora-Broomfield, CO.	1.0461
	Adams County, CO	
	Arapahoe County, CO	
	Broomfield County, CO	
	Clear Creek County, CO	
	Denver County, CO	
	Douglas County, CO	
	Elbert County, CO	
	Gilpin County, CO	
	Jefferson County, CO	
	Park County, CO	
19780 ..	Des Moines-West Des Moines, IA.	0.9433
	Dallas County, IA	
	Guthrie County, IA	
	Madison County, IA	
	Polk County, IA	
	Warren County, IA	
19804 ..	Detroit-Livonia-Dearborn, MI.	0.9256
	Wayne County, MI	
20020 ..	Dothan, AL	0.7136
	Geneva County, AL	
	Henry County, AL	
	Houston County, AL	
20100 ..	Dover, DE	0.9981
	Kent County, DE	
20220 ..	Dubuque, IA	0.8828
	Dubuque County, IA	
20260 ..	Duluth, MN–WI	0.9351
	Carlton County, MN	
	St. Louis County, MN	
	Douglas County, WI	
20500 ..	Durham-Chapel Hill, NC	0.9707
	Chatham County, NC	
	Durham County, NC	
	Orange County, NC	
	Person County, NC	
20740 ..	Eau Claire, WI	1.0174
	Chippewa County, WI	
	Eau Claire County, WI	
20764 ..	Edison-New Brunswick, NJ.	1.0956
	Middlesex County, NJ	
	Monmouth County, NJ	
	Ocean County, NJ	
	Somerset County, NJ	
20940 ..	El Centro, CA	0.8885
	Imperial County, CA	
21060 ..	Elizabethtown, KY	0.7928
	Hardin County, KY	

TABLE A—FY 2014 WAGE INDEX FOR URBAN AREAS BASED ON CBSA LABOR MARKET AREAS—Continued

CBSA Code	Urban area (constituent counties)	Wage index
	Larue County, KY	
21140 ..	Elkhart-Goshen, IN	0.9369
	Elkhart County, IN	
21300 ..	Elmira, NY	0.8396
	Chemung County, NY	
21340 ..	El Paso, TX	0.8441
	El Paso County, TX	
21500 ..	Erie, PA	0.7973
	Erie County, PA	
21660 ..	Eugene-Springfield, OR	1.1773
	Lane County, OR	
21780 ..	Evansville, IN–KY	0.8367
	Gibson County, IN	
	Posey County, IN	
	Vanderburgh County, IN	
	Warrick County, IN	
	Henderson County, KY	
	Webster County, KY	
21820 ..	Fairbanks, AK	1.1043
	Fairbanks North Star Borough, AK	
21940 ..	Fajardo, PR	0.3744
	Ceiba Municipio, PR	
	Fajardo Municipio, PR	
	Luquillo Municipio, PR	
22020 ..	Fargo, ND–MN	0.7835
	Cass County, ND	
	Clay County, MN	
22140 ..	Farmington, NM	0.9776
	San Juan County, NM	
22180 ..	Fayetteville, NC	0.8460
	Cumberland County, NC	
	Hoke County, NC	
22220 ..	Fayetteville-Springdale-Rogers, AR–MO.	0.8993
	Benton County, AR	
	Madison County, AR	
	Washington County, AR	
	McDonald County, MO	
22380 ..	Flagstaff, AZ	1.2840
	Coconino County, AZ	
22420 ..	Flint, MI	1.1303
	Genesee County, MI	
22500 ..	Florence, SC	0.7968
	Darlington County, SC	
	Florence County, SC	
22520 ..	Florence-Muscle Shoals, AL.	0.7553
	Colbert County, AL	
	Lauderdale County, AL	
22540 ..	Fond du Lac, WI	0.9517
	Fond du Lac County, WI	
22660 ..	Fort Collins-Loveland, CO.	0.9743
	Larimer County, CO	
22744 ..	Fort Lauderdale-Pompano Beach-Deerfield Beach, FL.	1.0422
	Broward County, FL	
22900 ..	Fort Smith, AR–OK	0.7588
	Crawford County, AR	
	Franklin County, AR	
	Sebastian County, AR	
	Le Flore County, OK	
	Sequoyah County, OK	
23060 ..	Fort Wayne, IN	0.9048
	Allen County, IN	
	Wells County, IN	
	Whitley County, IN	

TABLE A—FY 2014 WAGE INDEX FOR URBAN AREAS BASED ON CBSA LABOR MARKET AREAS—Continued

CBSA Code	Urban area (constituent counties)	Wage index
23104 ..	Fort Worth-Arlington, TX	0.9552
	Johnson County, TX	
	Parker County, TX	
	Tarrant County, TX	
	Wise County, TX	
23420 ..	Fresno, CA	1.1817
	Fresno County, CA	
23460 ..	Gadsden, AL	0.8017
	Etowah County, AL	
23540 ..	Gainesville, FL	0.9751
	Alachua County, FL	
	Gilchrist County, FL	
23580 ..	Gainesville, GA	0.9292
	Hall County, GA	
23844 ..	Gary, IN	0.9440
	Jasper County, IN	
	Lake County, IN	
	Newton County, IN	
	Porter County, IN	
24020 ..	Glens Falls, NY	0.8402
	Warren County, NY	
	Washington County, NY	
24140 ..	Goldsboro, NC	0.8316
	Wayne County, NC	
24220 ..	Grand Forks, ND–MN ...	0.7321
	Polk County, MN	
	Grand Forks County, ND	
24300 ..	Grand Junction, CO	0.9347
	Mesa County, CO	
24340 ..	Grand Rapids-Wyoming, MI.	0.9129
	Barry County, MI	
	Ionia County, MI	
	Kent County, MI	
	Newaygo County, MI	
24500 ..	Great Falls, MT	0.9274
	Cascade County, MT	
24540 ..	Greeley, CO	0.9694
	Weld County, CO	
24580 ..	Green Bay, WI	0.9627
	Brown County, WI	
	Kewaunee County, WI	
	Oconto County, WI	
24660 ..	Greensboro-High Point, NC.	0.8288
	Guilford County, NC	
	Randolph County, NC	
	Rockingham County, NC	
24780 ..	Greenville, NC	0.9382
	Greene County, NC	
	Pitt County, NC	
24860 ..	Greenville-Mauldin-Easley, SC.	0.9611
	Greenville County, SC	
	Laurens County, SC	
	Pickens County, SC	
25020 ..	Guayama, PR	0.3723
	Arroyo Municipio, PR	
	Guayama Municipio, PR	
	Patillas Municipio, PR	
25060 ..	Gulfport-Biloxi, MS	0.8610
	Hancock County, MS	
	Harrison County, MS	
	Stone County, MS	
25180 ..	Hagerstown-Martinsburg, MD–WV.	0.9273
	Washington County, MD	

TABLE A—FY 2014 WAGE INDEX FOR URBAN AREAS BASED ON CBSA LABOR MARKET AREAS—Continued

CBSA Code	Urban area (constituent counties)	Wage index
	Berkeley County, WV	
	Morgan County, WV	
25260 ..	Hanford-Corcoran, CA ..	1.1171
	Kings County, CA	
25420 ..	Harrisburg-Carlisle, PA	0.9515
	Cumberland County, PA	
	Dauphin County, PA	
	Perry County, PA	
25500 ..	Harrisonburg, VA	0.9128
	Rockingham County, VA	
	Harrisonburg City, VA	
25540 ..	Hartford-West Hartford-East Hartford, CT.	1.1056
	Hartford County, CT	
	Middlesex County, CT	
	Tolland County, CT	
25620 ..	Hattiesburg, MS	0.7972
	Forrest County, MS	
	Lamar County, MS	
	Perry County, MS	
25860 ..	Hickory-Lenoir-Morganton, NC.	0.8383
	Alexander County, NC	
	Burke County, NC	
	Caldwell County, NC	
	Catawba County, NC	
25980 ..	Hinesville-Fort Stewart, GA [1].	0.8602
	Liberty County, GA	
	Long County, GA	
26100 ..	Holland-Grand Haven, MI.	0.8050
	Ottawa County, MI	
26180 ..	Honolulu, HI	1.2109
	Honolulu County, HI	
26300 ..	Hot Springs, AR	0.8510
	Garland County, AR	
26380 ..	Houma-Bayou Cane-Thibodaux, LA.	0.7556
	Lafourche Parish, LA	
	Terrebonne Parish, LA	
26420 ..	Houston-Sugar Land-Baytown, TX.	0.9945
	Austin County, TX	
	Brazoria County, TX	
	Chambers County, TX	
	Fort Bend County, TX	
	Galveston County, TX	
	Harris County, TX	
	Liberty County, TX	
	Montgomery County, TX	
	San Jacinto County, TX	
	Waller County, TX	
26580 ..	Huntington-Ashland, WV–KY–OH.	0.8858
	Boyd County, KY	
	Greenup County, KY	
	Lawrence County, OH	
	Cabell County, WV	
	Wayne County, WV	
26620 ..	Huntsville, AL	0.8199
	Limestone County, AL	
	Madison County, AL	
26820 ..	Idaho Falls, ID	0.9351
	Bonneville County, ID	
	Jefferson County, ID	
26900 ..	Indianapolis-Carmel, IN	1.0151
	Boone County, IN	
	Brown County, IN	

TABLE A—FY 2014 WAGE INDEX FOR URBAN AREAS BASED ON CBSA LABOR MARKET AREAS—Continued

CBSA Code	Urban area (constituent counties)	Wage index
	Hamilton County, IN	
	Hancock County, IN	
	Hendricks County, IN	
	Johnson County, IN	
	Marion County, IN	
	Morgan County, IN	
	Putnam County, IN	
	Shelby County, IN	
26980 ..	Iowa City, IA	0.9896
	Johnson County, IA	
	Washington County, IA	
27060 ..	Ithaca, NY	0.9366
	Tompkins County, NY	
27100 ..	Jackson, MI	0.8981
	Jackson County, MI	
27140 ..	Jackson, MS	0.8196
	Copiah County, MS	
	Hinds County, MS	
	Madison County, MS	
	Rankin County, MS	
	Simpson County, MS	
27180 ..	Jackson, TN	0.7720
	Chester County, TN	
	Madison County, TN	
27260 ..	Jacksonville, FL	0.8987
	Baker County, FL	
	Clay County, FL	
	Duval County, FL	
	Nassau County, FL	
	St. Johns County, FL	
27340 ..	Jacksonville, NC	0.7894
	Onslow County, NC	
27500 ..	Janesville, WI	0.9110
	Rock County, WI	
27620 ..	Jefferson City, MO	0.8501
	Callaway County, MO	
	Cole County, MO	
	Moniteau County, MO	
	Osage County, MO	
27740 ..	Johnson City, TN	0.7257
	Carter County, TN	
	Unicoi County, TN	
	Washington County, TN	
27780 ..	Johnstown, PA	0.8486
	Cambria County, PA	
27860 ..	Jonesboro, AR	0.8017
	Craighead County, AR	
	Poinsett County, AR	
27900 ..	Joplin, MO	0.8016
	Jasper County, MO	
	Newton County, MO	
28020 ..	Kalamazoo-Portage, MI	1.0001
	Kalamazoo County, MI	
	Van Buren County, MI	
28100 ..	Kankakee-Bradley, IL	0.9698
	Kankakee County, IL	
28140 ..	Kansas City, MO–KS	0.9487
	Franklin County, KS	
	Johnson County, KS	
	Leavenworth County, KS	
	Linn County, KS	
	Miami County, KS	
	Wyandotte County, KS	
	Bates County, MO	
	Caldwell County, MO	
	Cass County, MO	
	Clay County, MO	
	Clinton County, MO	

TABLE A—FY 2014 WAGE INDEX FOR URBAN AREAS BASED ON CBSA LABOR MARKET AREAS—Continued

CBSA Code	Urban area (constituent counties)	Wage index
	Jackson County, MO	
	Lafayette County, MO	
	Platte County, MO	
	Ray County, MO	
28420 ..	Kennewick-Pasco-Richland, WA.	0.9499
	Benton County, WA	
	Franklin County, WA	
28660 ..	Killeen-Temple-Fort Hood, TX.	0.8963
	Bell County, TX	
	Coryell County, TX	
	Lampasas County, TX	
28700 ..	Kingsport-Bristol-Bristol, TN–VA.	0.7223
	Hawkins County, TN	
	Sullivan County, TN	
	Bristol City, VA	
	Scott County, VA	
	Washington County, VA	
28740 ..	Kingston, NY	0.9104
	Ulster County, NY	
28940 ..	Knoxville, TN	0.7484
	Anderson County, TN	
	Blount County, TN	
	Knox County, TN	
	Loudon County, TN	
	Union County, TN	
29020 ..	Kokomo, IN	0.9099
	Howard County, IN	
	Tipton County, IN	
29100 ..	La Crosse, WI–MN	1.0248
	Houston County, MN	
	La Crosse County, WI	
29140 ..	Lafayette, IN	0.9996
	Benton County, IN	
	Carroll County, IN	
	Tippecanoe County, IN	
29180 ..	Lafayette, LA	0.8266
	Lafayette Parish, LA	
	St. Martin Parish, LA	
29340 ..	Lake Charles, LA	0.7798
	Calcasieu Parish, LA	
	Cameron Parish, LA	
29404 ..	Lake County-Kenosha County, IL–WI.	1.0249
	Lake County, IL	
	Kenosha County, WI	
29420 ..	Lake Havasu City-Kingman, AZ.	0.9953
	Mohave County, AZ	
29460 ..	Lakeland-Winter Haven, FL.	0.8316
	Polk County, FL	
29540 ..	Lancaster, PA	0.9704
	Lancaster County, PA	
29620 ..	Lansing-East Lansing, MI.	1.0663
	Clinton County, MI	
	Eaton County, MI	
	Ingham County, MI	
29700 ..	Laredo, TX	0.7618
	Webb County, TX	
29740 ..	Las Cruces, NM	0.9210
	Dona Ana County, NM	
29820 ..	Las Vegas-Paradise, NV	1.1682
	Clark County, NV	
29940 ..	Lawrence, KS	0.8700
	Douglas County, KS	

TABLE A—FY 2014 WAGE INDEX FOR URBAN AREAS BASED ON CBSA LABOR MARKET AREAS—Continued

CBSA Code	Urban area (constituent counties)	Wage index
30020 ..	Lawton, OK	0.7926
	Comanche County, OK	
30140 ..	Lebanon, PA	0.8192
	Lebanon County, PA	
30300 ..	Lewiston, ID–WA	0.9254
	Nez Perce County, ID	
	Asotin County, WA	
30340 ..	Lewiston-Auburn, ME	0.9086
	Androscoggin County, ME	
30460 ..	Lexington-Fayette, KY	0.8850
	Bourbon County, KY	
	Clark County, KY	
	Fayette County, KY	
	Jessamine County, KY	
	Scott County, KY	
	Woodford County, KY	
30620 ..	Lima, OH	0.9170
	Allen County, OH	
30700 ..	Lincoln, NE	0.9505
	Lancaster County, NE	
	Seward County, NE	
30780 ..	Little Rock-North Little Rock-Conway, AR.	0.8661
	Faulkner County, AR	
	Grant County, AR	
	Lonoke County, AR	
	Perry County, AR	
	Pulaski County, AR	
	Saline County, AR	
30860 ..	Logan, UT–ID	0.8791
	Franklin County, ID	
	Cache County, UT	
30980 ..	Longview, TX	0.8971
	Gregg County, TX	
	Rusk County, TX	
	Upshur County, TX	
31020 ..	Longview, WA	1.0504
	Cowlitz County, WA	
31084 ..	Los Angeles-Long Beach-Glendale, CA.	1.2315
	Los Angeles County, CA	
31140 ..	Louisville-Jefferson County, KY–IN.	0.8892
	Clark County, IN	
	Floyd County, IN	
	Harrison County, IN	
	Washington County, IN	
	Bullitt County, KY	
	Henry County, KY	
	Meade County, KY	
	Nelson County, KY	
	Oldham County, KY	
	Shelby County, KY	
	Spencer County, KY	
	Trimble County, KY	
31180 ..	Lubbock, TX	0.8994
	Crosby County, TX	
	Lubbock County, TX	
31340 ..	Lynchburg, VA	0.8808
	Amherst County, VA	
	Appomattox County, VA	
	Bedford County, VA	
	Campbell County, VA	
	Bedford City, VA	
	Lynchburg City, VA	
31420 ..	Macon, GA	0.8860
	Bibb County, GA	
	Crawford County, GA	

TABLE A—FY 2014 WAGE INDEX FOR URBAN AREAS BASED ON CBSA LABOR MARKET AREAS—Continued

CBSA Code	Urban area (constituent counties)	Wage index
	Jones County, GA	
	Monroe County, GA	
	Twiggs County, GA	
31460 ..	Madera-Chowchilla, CA	0.8352
	Madera County, CA	
31540 ..	Madison, WI	1.1463
	Columbia County, WI	
	Dane County, WI	
	Iowa County, WI	
31700 ..	Manchester-Nashua, NH	1.0099
	Hillsborough County, NH	
31740 ..	Manhattan, KS	0.7876
	Geary County, KS	
	Pottawatomie County, KS	
	Riley County, KS	
31860 ..	Mankato-North Mankato, MN.	0.9316
	Blue Earth County, MN	
	Nicollet County, MN	
31900 ..	Mansfield, OH	0.8448
	Richland County, OH	
32420 ..	Mayagüez, PR	0.3769
	Hormigueros Municipio, PR	
	Mayagüez Municipio, PR	
32580 ..	McAllen-Edinburg-Mission, TX.	0.8429
	Hidalgo County, TX	
32780 ..	Medford, OR	1.0735
	Jackson County, OR	
32820 ..	Memphis, TN–MS–AR	0.9075
	Crittenden County, AR	
	DeSoto County, MS	
	Marshall County, MS	
	Tate County, MS	
	Tunica County, MS	
	Fayette County, TN	
	Shelby County, TN	
	Tipton County, TN	
32900 ..	Merced, CA	1.2788
	Merced County, CA	
33124 ..	Miami-Miami Beach-Kendall, FL.	0.9912
	Miami-Dade County, FL	
33140 ..	Michigan City-La Porte, IN.	0.9255
	LaPorte County, IN	
33260 ..	Midland, TX	1.0092
	Midland County, TX	
33340 ..	Milwaukee-Waukesha-West Allis, WI.	0.9868
	Milwaukee County, WI	
	Ozaukee County, WI	
	Washington County, WI	
	Waukesha County, WI	
33460 ..	Minneapolis-St. Paul-Bloomington, MN–WI.	1.1260
	Anoka County, MN	
	Carver County, MN	
	Chisago County, MN	
	Dakota County, MN	
	Hennepin County, MN	
	Isanti County, MN	
	Ramsey County, MN	
	Scott County, MN	
	Sherburne County, MN	

TABLE A—FY 2014 WAGE INDEX FOR URBAN AREAS BASED ON CBSA LABOR MARKET AREAS—Continued

CBSA Code	Urban area (constituent counties)	Wage index
	Washington County, MN	
	Wright County, MN	
	Pierce County, WI	
	St. Croix County, WI	
33540 ..	Missoula, MT	0.9100
	Missoula County, MT	
33660 ..	Mobile, AL	0.7475
	Mobile County, AL	
33700 ..	Modesto, CA	1.3641
	Stanislaus County, CA	
33740 ..	Monroe, LA	0.7550
	Ouachita Parish, LA	
	Union Parish, LA	
33780 ..	Monroe, MI	0.8755
	Monroe County, MI	
33860 ..	Montgomery, AL	0.7507
	Autauga County, AL	
	Elmore County, AL	
	Lowndes County, AL	
	Montgomery County, AL	
34060 ..	Morgantown, WV	0.8267
	Monongalia County, WV	
	Preston County, WV	
34100 ..	Morristown, TN	0.6884
	Grainger County, TN	
	Hamblen County, TN	
	Jefferson County, TN	
34580 ..	Mount Vernon-Anacortes, WA.	1.0697
	Skagit County, WA	
34620 ..	Muncie, IN	0.8780
	Delaware County, IN	
34740 ..	Muskegon-Norton Shores, MI.	0.9625
	Muskegon County, MI	
34820 ..	Myrtle Beach-North Myrtle Beach-Conway, SC.	0.8663
	Horry County, SC	
34900 ..	Napa, CA	1.5354
	Napa County, CA	
34940 ..	Naples-Marco Island, FL	0.9147
	Collier County, FL	
34980 ..	Nashville-Davidson—Murfreesboro-Franklin, TN.	0.9174
	Cannon County, TN	
	Cheatham County, TN	
	Davidson County, TN	
	Dickson County, TN	
	Hickman County, TN	
	Macon County, TN	
	Robertson County, TN	
	Rutherford County, TN	
	Smith County, TN	
	Sumner County, TN	
	Trousdale County, TN	
	Williamson County, TN	
	Wilson County, TN	
35004 ..	Nassau-Suffolk, NY	1.2764
	Nassau County, NY	
	Suffolk County, NY	
35084 ..	Newark-Union, NJ–PA	1.1273
	Essex County, NJ	
	Hunterdon County, NJ	
	Morris County, NJ	
	Sussex County, NJ	
	Union County, NJ	
	Pike County, PA	

TABLE A—FY 2014 WAGE INDEX FOR URBAN AREAS BASED ON CBSA LABOR MARKET AREAS—Continued

CBSA Code	Urban area (constituent counties)	Wage index
35300 ..	New Haven-Milford, CT	1.1933
	New Haven County, CT	
35380 ..	New Orleans-Metairie-Kenner, LA.	0.8789
	Jefferson Parish, LA	
	Orleans Parish, LA	
	Plaquemines Parish, LA	
	St. Bernard Parish, LA	
	St. Charles Parish, LA	
	St. John the Baptist Parish, LA	
	St. Tammany Parish, LA	
35644 ..	New York-White Plains-Wayne, NY–NJ.	1.3117
	Bergen County, NJ	
	Hudson County, NJ	
	Passaic County, NJ	
	Bronx County, NY	
	Kings County, NY	
	New York County, NY	
	Putnam County, NY	
	Queens County, NY	
	Richmond County, NY	
	Rockland County, NY	
	Westchester County, NY	
35660 ..	Niles-Benton Harbor, MI	0.8479
	Berrien County, MI	
35840 ..	North Port-Bradenton-Sarasota-Venice, FL.	0.9468
	Manatee County, FL	
	Sarasota County, FL	
35980 ..	Norwich-New London, CT.	1.1871
	New London County, CT	
36084 ..	Oakland-Fremont-Hayward, CA.	1.7061
	Alameda County, CA	
	Contra Costa County, CA	
36100 ..	Ocala, FL	0.8461
	Marion County, FL	
36140 ..	Ocean City, NJ	1.0628
	Cape May County, NJ	
36220 ..	Odessa, TX	0.9702
	Ector County, TX	
36260 ..	Ogden-Clearfield, UT	0.9209
	Davis County, UT	
	Morgan County, UT	
	Weber County, UT	
36420 ..	Oklahoma City, OK	0.8896
	Canadian County, OK	
	Cleveland County, OK	
	Grady County, OK	
	Lincoln County, OK	
	Logan County, OK	
	McClain County, OK	
	Oklahoma County, OK	
36500 ..	Olympia, WA	1.1650
	Thurston County, WA	
36540 ..	Omaha-Council Bluffs, NE–IA.	0.9797
	Harrison County, IA	
	Mills County, IA	
	Pottawattamie County, IA	
	Cass County, NE	
	Douglas County, NE	
	Sarpy County, NE	

TABLE A—FY 2014 WAGE INDEX FOR URBAN AREAS BASED ON CBSA LABOR MARKET AREAS—Continued

CBSA Code	Urban area (constituent counties)	Wage index
	Saunders County, NE	
	Washington County, NE	
36740 ..	Orlando-Kissimmee, FL	0.9101
	Lake County, FL	
	Orange County, FL	
	Osceola County, FL	
	Seminole County, FL	
36780 ..	Oshkosh-Neenah, WI	0.9438
	Winnebago County, WI	
36980 ..	Owensboro, KY	0.7823
	Daviess County, KY	
	Hancock County, KY	
	McLean County, KY	
37100 ..	Oxnard-Thousand Oaks-Ventura, CA.	1.3132
	Ventura County, CA	
37340 ..	Palm Bay-Melbourne-Titusville, FL.	0.8707
	Brevard County, FL	
37380 ..	Palm Coast, FL	0.8209
	Flagler County, FL	
37460 ..	Panama City-Lynn Haven-Panama City Beach, FL.	0.7909
	Bay County, FL	
37620 ..	Parkersburg-Marietta-Vienna, WV–OH.	0.7576
	Washington County, OH	
	Pleasants County, WV	
	Wirt County, WV	
	Wood County, WV	
37700 ..	Pascagoula, MS	0.7574
	George County, MS	
	Jackson County, MS	
37764 ..	Peabody, MA	1.0571
	Essex County, MA	
37860 ..	Pensacola-Ferry Pass-Brent, FL.	0.7800
	Escambia County, FL	
	Santa Rosa County, FL	
37900 ..	Peoria, IL	0.8290
	Marshall County, IL	
	Peoria County, IL	
	Stark County, IL	
	Tazewell County, IL	
	Woodford County, IL	
37964 ..	Philadelphia, PA	1.0926
	Bucks County, PA	
	Chester County, PA	
	Delaware County, PA	
	Montgomery County, PA	
	Philadelphia County, PA	
38060 ..	Phoenix-Mesa-Scottsdale, AZ.	1.0505
	Maricopa County, AZ	
	Pinal County, AZ	
38220 ..	Pine Bluff, AR	0.8103
	Cleveland County, AR	
	Jefferson County, AR	
	Lincoln County, AR	
38300 ..	Pittsburgh, PA	0.8713
	Allegheny County, PA	
	Armstrong County, PA	
	Beaver County, PA	
	Butler County, PA	
	Fayette County, PA	
	Washington County, PA	
	Westmoreland County, PA	

TABLE A—FY 2014 WAGE INDEX FOR URBAN AREAS BASED ON CBSA LABOR MARKET AREAS—Continued

CBSA Code	Urban area (constituent counties)	Wage index
38340 ..	Pittsfield, MA	1.0966
	Berkshire County, MA	
38540 ..	Pocatello, ID	0.9795
	Bannock County, ID	
	Power County, ID	
38660 ..	Ponce, PR	0.4614
	Juana Díaz Municipio, PR	
	Ponce Municipio, PR	
	Villalba Municipio, PR	
38860 ..	Portland-South Portland-Biddeford, ME.	1.0023
	Cumberland County, ME	
	Sagadahoc County, ME	
	York County, ME	
38900 ..	Portland-Vancouver-Beaverton, OR–WA.	1.1848
	Clackamas County, OR	
	Columbia County, OR	
	Multnomah County, OR	
	Washington County, OR	
	Yamhill County, OR	
	Clark County, WA	
	Skamania County, WA	
38940 ..	Port St. Lucie, FL	0.9391
	Martin County, FL	
	St. Lucie County, FL	
39100 ..	Poughkeepsie-Newburgh-Middletown, NY.	1.1593
	Dutchess County, NY	
	Orange County, NY	
39140 ..	Prescott, AZ	1.0199
	Yavapai County, AZ	
39300 ..	Providence-New Bedford-Fall River, RI–MA.	1.0579
	Bristol County, MA	
	Bristol County, RI	
	Kent County, RI	
	Newport County, RI	
	Providence County, RI	
	Washington County, RI	
39340 ..	Provo-Orem, UT	0.9501
	Juab County, UT	
	Utah County, UT	
39380 ..	Pueblo, CO	0.8250
	Pueblo County, CO	
39460 ..	Punta Gorda, FL	0.8771
	Charlotte County, FL	
39540 ..	Racine, WI	0.9352
	Racine County, WI	
39580 ..	Raleigh-Cary, NC	0.9286
	Franklin County, NC	
	Johnston County, NC	
	Wake County, NC	
39660 ..	Rapid City, SD	0.9608
	Meade County, SD	
	Pennington County, SD	
39740 ..	Reading, PA	0.9105
	Berks County, PA	
39820 ..	Redding, CA	1.5053
	Shasta County, CA	
39900 ..	Reno-Sparks, NV	1.0369
	Storey County, NV	
	Washoe County, NV	
40060 ..	Richmond, VA	0.9723
	Amelia County, VA	
	Caroline County, VA	
	Charles City County, VA	
	Chesterfield County, VA	

TABLE A—FY 2014 WAGE INDEX FOR URBAN AREAS BASED ON CBSA LABOR MARKET AREAS—Continued

CBSA Code	Urban area (constituent counties)	Wage index
	Cumberland County, VA	
	Dinwiddie County, VA	
	Goochland County, VA	
	Hanover County, VA	
	Henrico County, VA	
	King and Queen County, VA	
	King William County, VA	
	Louisa County, VA	
	New Kent County, VA	
	Powhatan County, VA	
	Prince George County, VA	
	Sussex County, VA	
	Colonial Heights City, VA	
	Hopewell City, VA	
	Petersburg City, VA	
	Richmond City, VA	
40140 ..	Riverside-San Bernardino-Ontario, CA.	1.1492
	Riverside County, CA	
	San Bernardino County, CA	
40220 ..	Roanoke, VA	0.9233
	Botetourt County, VA	
	Craig County, VA	
	Franklin County, VA	
	Roanoke County, VA	
	Roanoke City, VA	
	Salem City, VA	
40340 ..	Rochester, MN	1.1712
	Dodge County, MN	
	Olmsted County, MN	
	Wabasha County, MN	
40380 ..	Rochester, NY	0.8770
	Livingston County, NY	
	Monroe County, NY	
	Ontario County, NY	
	Orleans County, NY	
	Wayne County, NY	
40420 ..	Rockford, IL	0.9792
	Boone County, IL	
	Winnebago County, IL	
40484 ..	Rockingham County-Strafford County, NH.	1.0215
	Rockingham County, NH	
	Strafford County, NH	
40580 ..	Rocky Mount, NC	0.8786
	Edgecombe County, NC	
	Nash County, NC	
40660 ..	Rome, GA	0.8962
	Floyd County, GA	
40900 ..	Sacramento-Arden-Arcade-Roseville, CA.	1.5211
	El Dorado County, CA	
	Placer County, CA	
	Sacramento County, CA	
	Yolo County, CA	
40980 ..	Saginaw-Saginaw Township North, MI.	0.8886
	Saginaw County, MI	
41060 ..	St. Cloud, MN	1.0703
	Benton County, MN	
	Stearns County, MN	
41100 ..	St. George, UT	0.9385
	Washington County, UT	

TABLE A—FY 2014 WAGE INDEX FOR URBAN AREAS BASED ON CBSA LABOR MARKET AREAS—Continued

CBSA Code	Urban area (constituent counties)	Wage index
41140 ..	St. Joseph, MO–KS	0.9876
	Doniphan County, KS	
	Andrew County, MO	
	Buchanan County, MO	
	DeKalb County, MO	
41180 ..	St. Louis, MO–IL	0.9373
	Bond County, IL	
	Calhoun County, IL	
	Clinton County, IL	
	Jersey County, IL	
	Macoupin County, IL	
	Madison County, IL	
	Monroe County, IL	
	St. Clair County, IL	
	Crawford County, MO	
	Franklin County, MO	
	Jefferson County, MO	
	Lincoln County, MO	
	St. Charles County, MO	
	St. Louis County, MO	
	Warren County, MO	
	Washington County, MO	
	St. Louis City, MO	
41420 ..	Salem, OR	1.1195
	Marion County, OR	
	Polk County, OR	
41500 ..	Salinas, CA	1.5626
	Monterey County, CA	
41540 ..	Salisbury, MD	0.8986
	Somerset County, MD	
	Wicomico County, MD	
41620 ..	Salt Lake City, UT	0.9396
	Salt Lake County, UT	
	Summit County, UT	
	Tooele County, UT	
41660 ..	San Angelo, TX	0.8053
	Irion County, TX	
	Tom Green County, TX	
41700 ..	San Antonio, TX	0.8939
	Atascosa County, TX	
	Bandera County, TX	
	Bexar County, TX	
	Comal County, TX	
	Guadalupe County, TX	
	Kendall County, TX	
	Medina County, TX	
	Wilson County, TX	
41740 ..	San Diego-Carlsbad-San Marcos, CA.	1.2104
	San Diego County, CA	
41780 ..	Sandusky, OH	0.7821
	Erie County, OH	
41884 ..	San Francisco-San Mateo-Redwood City, CA.	1.6200
	Marin County, CA	
	San Francisco County, CA	
	San Mateo County, CA	
41900 ..	San Germán-Cabo Rojo, PR.	0.4569
	Cabo Rojo Municipio, PR	
	Lajas Municipio, PR	
	Sabana Grande Municipio, PR	
	San Germán Municipio, PR	

TABLE A—FY 2014 WAGE INDEX FOR URBAN AREAS BASED ON CBSA LABOR MARKET AREAS—Continued

CBSA Code	Urban area (constituent counties)	Wage index
41940 ..	San Jose-Sunnyvale-Santa Clara, CA.	1.6761
	San Benito County, CA	
	Santa Clara County, CA	
41980 ..	San Juan-Caguas-Guaynabo, PR.	0.4374
	Aguas Buenas Municipio, PR	
	Aibonito Municipio, PR	
	Arecibo Municipio, PR	
	Barceloneta Municipio, PR	
	Barranquitas Municipio, PR	
	Bayamón Municipio, PR	
	Caguas Municipio, PR	
	Camuy Municipio, PR	
	Canóvanas Municipio, PR	
	Carolina Municipio, PR	
	Cataño Municipio, PR	
	Cayey Municipio, PR	
	Ciales Municipio, PR	
	Cidra Municipio, PR	
	Comerío Municipio, PR	
	Corozal Municipio, PR	
	Dorado Municipio, PR	
	Florida Municipio, PR	
	Guaynabo Municipio, PR	
	Gurabo Municipio, PR	
	Hatillo Municipio, PR	
	Humacao Municipio, PR	
	Juncos Municipio, PR	
	Las Piedras Municipio, PR	
	Loíza Municipio, PR	
	Manatí Municipio, PR	
	Maunabo Municipio, PR	
	Morovis Municipio, PR	
	Naguabo Municipio, PR	
	Naranjito Municipio, PR	
	Orocovis Municipio, PR	
	Quebradillas Municipio, PR	
	Río Grande Municipio, PR	
	San Juan Municipio, PR	
	San Lorenzo Municipio, PR	
	Toa Alta Municipio, PR	
	Toa Baja Municipio, PR	
	Trujillo Alto Municipio, PR	
	Vega Alta Municipio, PR	
	Vega Baja Municipio, PR	
	Yabucoa Municipio, PR	
42020 ..	San Luis Obispo-Paso Robles, CA.	1.3089
	San Luis Obispo County, CA	
42044 ..	Santa Ana-Anaheim-Irvine, CA.	1.2036
	Orange County, CA	
42060 ..	Santa Barbara-Santa Maria-Goleta, CA.	1.3165
	Santa Barbara County, CA	

TABLE A—FY 2014 WAGE INDEX FOR URBAN AREAS BASED ON CBSA LABOR MARKET AREAS—Continued

CBSA Code	Urban area (constituent counties)	Wage index
42100 ..	Santa Cruz-Watsonville, CA.	1.7835
	Santa Cruz County, CA	
42140 ..	Santa Fe, NM	1.0179
	Santa Fe County, NM	
42220 ..	Santa Rosa-Petaluma, CA.	1.6743
	Sonoma County, CA	
42340 ..	Savannah, GA	0.8572
	Bryan County, GA	
	Chatham County, GA	
	Effingham County, GA	
42540 ..	Scranton—Wilkes-Barre, PA.	0.8283
	Lackawanna County, PA	
	Luzerne County, PA	
	Wyoming County, PA	
42644 ..	Seattle-Bellevue-Everett, WA.	1.1784
	King County, WA	
	Snohomish County, WA	
42680 ..	Sebastian-Vero Beach, FL.	0.8797
	Indian River County, FL	
43100 ..	Sheboygan, WI	0.9242
	Sheboygan County, WI	
43300 ..	Sherman-Denison, TX ..	0.8760
	Grayson County, TX	
43340 ..	Shreveport-Bossier City, LA.	0.8297
	Bossier Parish, LA	
	Caddo Parish, LA	
	De Soto Parish, LA	
43580 ..	Sioux City, IA–NE–SD ..	0.9202
	Woodbury County, IA	
	Dakota County, NE	
	Dixon County, NE	
	Union County, SD	
43620 ..	Sioux Falls, SD	0.8310
	Lincoln County, SD	
	McCook County, SD	
	Minnehaha County, SD	
	Turner County, SD	
43780 ..	South Bend-Mishawaka, IN–MI.	0.9465
	St. Joseph County, IN	
	Cass County, MI	
43900 ..	Spartanburg, SC	0.8797
	Spartanburg County, SC	
44060 ..	Spokane, WA	1.1221
	Spokane County, WA	
44100 ..	Springfield, IL	0.9204
	Menard County, IL	
	Sangamon County, IL	
44140 ..	Springfield, MA	1.0422
	Franklin County, MA	
	Hampden County, MA	
	Hampshire County, MA	
44180 ..	Springfield, MO	0.8476
	Christian County, MO	
	Dallas County, MO	
	Greene County, MO	
	Polk County, MO	
	Webster County, MO	
44220 ..	Springfield, OH	0.8483
	Clark County, OH	
44300 ..	State College, PA	0.9615
	Centre County, PA	

TABLE A—FY 2014 WAGE INDEX FOR URBAN AREAS BASED ON CBSA LABOR MARKET AREAS—Continued

CBSA Code	Urban area (constituent counties)	Wage index
44600 ..	Steubenville-Weirton, OH–WV.	0.7415
	Jefferson County, OH	
	Brooke County, WV	
	Hancock County, WV	
44700 ..	Stockton, CA	1.3792
	San Joaquin County, CA	
44940 ..	Sumter, SC	0.7626
	Sumter County, SC	
45060 ..	Syracuse, NY	0.9937
	Madison County, NY	
	Onondaga County, NY	
	Oswego County, NY	
45104 ..	Tacoma, WA	1.1623
	Pierce County, WA	
45220 ..	Tallahassee, FL	0.8602
	Gadsden County, FL	
	Jefferson County, FL	
	Leon County, FL	
	Wakulla County, FL	
45300 ..	Tampa-St. Petersburg-Clearwater, FL.	0.9114
	Hernando County, FL	
	Hillsborough County, FL	
	Pasco County, FL	
	Pinellas County, FL	
45460 ..	Terre Haute, IN	0.9747
	Clay County, IN	
	Sullivan County, IN	
	Vermillion County, IN	
	Vigo County, IN	
45500 ..	Texarkana, TX-Texarkana, AR.	0.7459
	Miller County, AR	
	Bowie County, TX	
45780 ..	Toledo, OH	0.8854
	Fulton County, OH	
	Lucas County, OH	
	Ottawa County, OH	
	Wood County, OH	
45820 ..	Topeka, KS	0.9012
	Jackson County, KS	
	Jefferson County, KS	
	Osage County, KS	
	Shawnee County, KS	
	Wabaunsee County, KS	
45940 ..	Trenton-Ewing, NJ	1.0622
	Mercer County, NJ	
46060 ..	Tucson, AZ	0.8991
	Pima County, AZ	
46140 ..	Tulsa, OK	0.8179
	Creek County, OK	
	Okmulgee County, OK	
	Osage County, OK	
	Pawnee County, OK	
	Rogers County, OK	
	Tulsa County, OK	
	Wagoner County, OK	
46220 ..	Tuscaloosa, AL	0.8498
	Greene County, AL	
	Hale County, AL	
	Tuscaloosa County, AL	
46340 ..	Tyler, TX	0.8562
	Smith County, TX	
46540 ..	Utica-Rome, NY	0.8806
	Herkimer County, NY	
	Oneida County, NY	
46660 ..	Valdosta, GA	0.7558
	Brooks County, GA	
	Echols County, GA	
	Lanier County, GA	
	Lowndes County, GA	
46700 ..	Vallejo-Fairfield, CA	1.6355
	Solano County, CA	
47020 ..	Victoria, TX	0.8986
	Calhoun County, TX	
	Goliad County, TX	
	Victoria County, TX	
47220 ..	Vineland-Millville-Bridgeton, NJ.	1.0674
	Cumberland County, NJ	
47260 ..	Virginia Beach-Norfolk-Newport News, VA–NC.	0.8928
	Currituck County, NC	
	Gloucester County, VA	
	Isle of Wight County, VA	
	James City County, VA	
	Mathews County, VA	
	Surry County, VA	
	York County, VA	
	Chesapeake City, VA	
	Hampton City, VA	
	Newport News City, VA	
	Norfolk City, VA	
	Poquoson City, VA	
	Portsmouth City, VA	
	Suffolk City, VA	
	Virginia Beach City, VA	
	Williamsburg City, VA	
47300 ..	Visalia-Porterville, CA ...	0.9989
	Tulare County, CA	
47380 ..	Waco, TX	0.8248
	McLennan County, TX	
47580 ..	Warner Robins, GA	0.7718
	Houston County, GA	
47644 ..	Warren-Troy-Farmington Hills, MI.	0.9464
	Lapeer County, MI	
	Livingston County, MI	
	Macomb County, MI	
	Oakland County, MI	
	St. Clair County, MI	
47894 ..	Washington-Arlington-Alexandria, DC–VA–MD–WV.	1.0570
	District of Columbia, DC	
	Calvert County, MD	
	Charles County, MD	
	Prince George's County, MD	
	Arlington County, VA	
	Clarke County, VA	
	Fairfax County, VA	
	Fauquier County, VA	
	Loudoun County, VA	
	Prince William County, VA	
	Spotsylvania County, VA	
	Stafford County, VA	
	Warren County, VA	
	Alexandria City, VA	
	Fairfax City, VA	
	Falls Church City, VA	
	Fredericksburg City, VA	
	Manassas City, VA	
	Manassas Park City, VA	
	Jefferson County, WV	
47940 ..	Waterloo-Cedar Falls, IA	0.8366
	Black Hawk County, IA	
	Bremer County, IA	
	Grundy County, IA	
48140 ..	Wausau, WI	0.8652
	Marathon County, WI	
48300 ..	Wenatchee-East Wenatchee, WA.	1.0151
	Chelan County, WA	
	Douglas County, WA	
48424 ..	West Palm Beach-Boca Raton-Boynton Beach, FL.	0.9637
	Palm Beach County, FL	
48540 ..	Wheeling, WV–OH	0.6702
	Belmont County, OH	
	Marshall County, WV	
	Ohio County, WV	
48620 ..	Wichita, KS	0.8710
	Butler County, KS	
	Harvey County, KS	
	Sedgwick County, KS	
	Sumner County, KS	
48660 ..	Wichita Falls, TX	0.9578
	Archer County, TX	
	Clay County, TX	
	Wichita County, TX	
48700 ..	Williamsport, PA	0.8303
	Lycoming County, PA	
48864 ..	Wilmington, DE–MD–NJ	1.0632
	New Castle County, DE	
	Cecil County, MD	
	Salem County, NJ	
48900 ..	Wilmington, NC	0.8900
	Brunswick County, NC	
	New Hanover County, NC	
	Pender County, NC	
49020 ..	Winchester, VA–WV	0.9072
	Frederick County, VA	
	Winchester City, VA	
	Hampshire County, WV	
49180 ..	Winston-Salem, NC	0.8373
	Davie County, NC	
	Forsyth County, NC	
	Stokes County, NC	
	Yadkin County, NC	
49340 ..	Worcester, MA	1.1632
	Worcester County, MA	
49420 ..	Yakima, WA	1.0399
	Yakima County, WA	
49500 ..	Yauco, PR	0.3798
	Guánica Municipio, PR	
	Guayanilla Municipio, PR	
	Peñuelas Municipio, PR	
	Yauco Municipio, PR	
49620 ..	York-Hanover, PA	0.9580
	York County, PA	
49660 ..	Youngstown-Warren-Boardman, OH–PA.	0.8406
	Mahoning County, OH	
	Trumbull County, OH	
	Mercer County, PA	
49700 ..	Yuba City, CA [1]	1.1809
	Sutter County, CA	
	Yuba County, CA	

TABLE A—FY 2014 WAGE INDEX FOR URBAN AREAS BASED ON CBSA LABOR MARKET AREAS—Continued

CBSA Code	Urban area (constituent counties)	Wage index
49740 ..	Yuma, AZ ..... Yuma County, AZ	0.9715

[1] At this time, there are no hospitals located in this urban area on which to base a wage index.

TABLE B—FY 2014 WAGE INDEX BASED ON CBSA LABOR MARKET AREAS FOR RURAL AREAS

State code	Nonurban area	Wage index
1	Alabama	0.7175
2	Alaska	1.3720
3	Arizona	0.9205
4	Arkansas	0.7374
5	California	1.2697
6	Colorado	0.9844
7	Connecticut	1.1356
8	Delaware	1.0116
10	Florida	0.8009
11	Georgia	0.7482
12	Hawaii	0.9919
13	Idaho	0.7637
14	Illinois	0.8392
15	Indiana	0.8547
16	Iowa	0.8470
17	Kansas	0.7963
18	Kentucky	0.7726
19	Louisiana	0.7610
20	Maine	0.8273
21	Maryland	0.8733
22	Massachusetts	1.3671

TABLE B—FY 2014 WAGE INDEX BASED ON CBSA LABOR MARKET AREAS FOR RURAL AREAS—Continued

State code	Nonurban area	Wage index
23	Michigan	0.8308
24	Minnesota	0.9140
25	Mississippi	0.7610
26	Missouri	0.7780
27	Montana	0.9136
28	Nebraska	0.8893
29	Nevada	0.9822
30	New Hampshire	1.0381
31	New Jersey [1]	.....
32	New Mexico	0.8843
33	New York	0.8235
34	North Carolina	0.8118
35	North Dakota	0.6814
36	Ohio	0.8281
37	Oklahoma	0.7712
38	Oregon	0.9437
39	Pennsylvania	0.8350
40	Puerto Rico [1]	0.4047
41	Rhode Island [1]	.....
42	South Carolina	0.8337
43	South Dakota	0.8199
44	Tennessee	0.7458
45	Texas	0.7889
46	Utah	0.8769
47	Vermont	0.9782
48	Virgin Islands	0.7089
49	Virginia	0.7802
50	Washington	1.0574
51	West Virginia	0.7398
52	Wisconsin	0.8934
53	Wyoming	0.9280

TABLE B—FY 2014 WAGE INDEX BASED ON CBSA LABOR MARKET AREAS FOR RURAL AREAS—Continued

State code	Nonurban area	Wage index
65	Guam	0.9611

[1] All counties within the State are classified as urban, with the exception of Puerto Rico. Puerto Rico has areas designated as rural; however, no short-term, acute care hospitals are located in the area(s) for FY 2014. The Puerto Rico wage index is the same as FY 2013.

[FR Doc. 2013–10558 Filed 5–1–13; 4:15 pm]

BILLING CODE 4120–01–P

FEDERAL REGISTER

Vol. 78 Monday,

No. 87 May 6, 2013

Part III

The President

Proclamation 8974—National Day of Prayer, 2013

Federal Register
Vol. 78, No. 87
Monday, May 6, 2013

Presidential Documents

Title 3—

The President

Proclamation 8974 of May 1, 2013

National Day of Prayer, 2013

By the President of the United States of America

A Proclamation

Americans have long turned to prayer both in times of joy and times of sorrow. On their voyage to the New World, the earliest settlers prayed that they would ''rejoice together, mourn together, labor, and suffer together, always having before our eyes our commission and community in the work.'' From that day forward, Americans have prayed as a means of uniting, guiding, and healing. In times of hardship and tragedy, and in periods of peace and prosperity, prayer has provided reassurance, sustenance, and affirmation of common purpose.

Prayer brings communities together and can be a wellspring of strength and support. In the aftermath of senseless acts of violence, the prayers of countless Americans signal to grieving families and a suffering community that they are not alone. Their pain is a shared pain, and their hope a shared hope. Regardless of religion or creed, Americans reflect on the sacredness of life and express their sympathy for the wounded, offering comfort and holding up a light in an hour of darkness.

All of us have the freedom to pray and exercise our faiths openly. Our laws protect these God-given liberties, and rightly so. Today and every day, prayers will be offered in houses of worship, at community gatherings, in our homes, and in neighborhoods all across our country. Let us give thanks for the freedom to practice our faith as we see fit, whether individually or in fellowship.

On this day, let us remember in our thoughts and prayers all those affected by recent events, such as the Boston Marathon bombings, the Newtown, Connecticut shootings, and the explosion in West, Texas. Let us pray for the police officers, firefighters, and other first responders who put themselves in harm's way to protect their fellow Americans. Let us also pray for the safety of our brave men and women in uniform and their families who serve and sacrifice for our country. Let us come together to pray for peace and goodwill today and in the days ahead as we work to meet the great challenges of our time.

The Congress, by Public Law 100–307, as amended, has called on the President to issue each year a proclamation designating the first Thursday in May as a ''National Day of Prayer.''

NOW, THEREFORE, I, BARACK OBAMA, President of the United States of America, by virtue of the authority vested in me by the Constitution and the laws of the United States, do hereby proclaim May 2, 2013, as a National Day of Prayer. I join the citizens of our Nation in giving thanks, in accordance with our own faiths and consciences, for our many freedoms and blessings, and in asking for God's continued guidance, mercy, and protection.

IN WITNESS WHEREOF, I have hereunto set my hand this first day of May, in the year of our Lord two thousand thirteen, and of the Independence of the United States of America the two hundred and thirty-seventh.

[FR Doc. 2013–10878
Filed 5–3–13; 11:15 am]
Billing code 3295–F3

Reader Aids

Federal Register

Vol. 78, No. 87

Monday, May 6, 2013

CUSTOMER SERVICE AND INFORMATION

Federal Register/Code of Federal Regulations	
General Information, indexes and other finding aids	**202–741–6000**
Laws	**741–6000**
Presidential Documents	
Executive orders and proclamations	**741–6000**
The United States Government Manual	**741–6000**
Other Services	
Electronic and on-line services (voice)	**741–6020**
Privacy Act Compilation	**741–6064**
Public Laws Update Service (numbers, dates, etc.)	**741–6043**
TTY for the deaf-and-hard-of-hearing	**741–6086**

ELECTRONIC RESEARCH

World Wide Web

Full text of the daily Federal Register, CFR and other publications is located at: **www.fdsys.gov.**

Federal Register information and research tools, including Public Inspection List, indexes, and links to GPO Access are located at: **www.ofr.gov.**

E-mail

FEDREGTOC-L (Federal Register Table of Contents LISTSERV) is an open e-mail service that provides subscribers with a digital form of the Federal Register Table of Contents. The digital form of the Federal Register Table of Contents includes HTML and PDF links to the full text of each document.

To join or leave, go to **http://listserv.access.gpo.gov** and select *Online mailing list archives, FEDREGTOC-L, Join or leave the list (or change settings);* then follow the instructions.

PENS (Public Law Electronic Notification Service) is an e-mail service that notifies subscribers of recently enacted laws.

To subscribe, go to **http://listserv.gsa.gov/archives/publaws-l.html** and select *Join or leave the list (or change settings);* then follow the instructions.

FEDREGTOC-L and **PENS** are mailing lists only. We cannot respond to specific inquiries.

Reference questions. Send questions and comments about the Federal Register system to: **fedreg.info@nara.gov**

The Federal Register staff cannot interpret specific documents or regulations.

Reminders. Effective January 1, 2009, the Reminders, including Rules Going Into Effect and Comments Due Next Week, no longer appear in the Reader Aids section of the Federal Register. This information can be found online at **http://www.regulations.gov.**

CFR Checklist. Effective January 1, 2009, the CFR Checklist no longer appears in the Federal Register. This information can be found online at **http://bookstore.gpo.gov/.**

FEDERAL REGISTER PAGES AND DATE, MAY

25361–25564 1
25565–25786 2
25787–26230 3
26231–26484 6

CFR PARTS AFFECTED DURING MAY

At the end of each month the Office of the Federal Register publishes separately a List of CFR Sections Affected (LSA), which lists parts and sections affected by documents published since the revision date of each title.

3 CFR

Proclamations:
8964 25563
8965 26213
8966 26215
8967 26217
8968 26219
8969 26221
8970 26223
8971 26225
8972 26227
8973 26229
8974 26483

Administrative Orders:

Notice:
Notice of May 2, 2013 26231

7 CFR

319 25565
1739 25787

Proposed Rules:
205 25879
319 ..... 25620, 25623

10 CFR

719 25795

Proposed Rules:
2 25886
430 25626
431 25627

11 CFR

Proposed Rules:
Ch. I 25635

12 CFR

1026 25818

Proposed Rules:
1024 25638
1026 25638

14 CFR

25 ..... 25840, 25846
39 ..... 25361, 25363, 25365, 25367, 25369, 25372, 25374, 25377, 25380, 26233, 26241
71 ..... 25382, 25383, 25384, 26243
97 ..... 25384, 25386

Proposed Rules:
25 26280
39 ..... 25662, 25664, 25666, 25898, 25902, 25905, 26286
71 ..... 25402, 25403, 25404, 25406

16 CFR

Proposed Rules:
23 26289
435 25908

22 CFR

Proposed Rules:
62 25669

26 CFR

301 26244
602 26244

Proposed Rules:
1 25909

32 CFR

323 25853

Proposed Rules:
776 25538

33 CFR

100 ..... 25572, 25574, 26246
117 ..... 26248, 26249
165 25577

Proposed Rules:
162 25677
165 ..... 25407, 25410, 26293

38 CFR

17 26250

39 CFR

Proposed Rules:
111 25677

40 CFR

9 25388
52 ..... 25858, 26251, 26255, 26258
98 25392
180 25396
271 25779
721 25388

Proposed Rules:
52 ..... 26300, 26301
271 25671

42 CFR

Proposed Rules:
413 26438
424 26438

44 CFR

64 ..... 25582, 25585, 25589

45 CFR

60 25858
61 25858
800 25591

47 CFR

51 26261
54 ..... 26261, 26269
69 26261
73 ..... 25591, 25861

Proposed Rules:
0 25916

2.....25916
15.....25916
68.....25916

48 CFR

931.....25795
952.....25795
970.....25795

50 CFR

622.....25861q
648 .....25591, 25862, 26118, 26172
660.....25865, 26277
679.....25878

Proposed Rules:

17 .....25679, 26302, 26308
600.....25685

LIST OF PUBLIC LAWS

This is a continuing list of public bills from the current session of Congress which have become Federal laws. It may be used in conjunction with "P L U S" (Public Laws Update Service) on 202–741–6043. This list is also available online at *http://www.archives.gov/federal-register/laws*.

The text of laws is not published in the **Federal Register** but may be ordered in "slip law" (individual pamphlet) form from the Superintendent of Documents, U.S. Government Printing Office, Washington, DC 20402 (phone, 202–512–1808). The text will also be made available on the Internet from GPO's Federal Digital System (FDsys) at *http://www.gpo.gov/fdsys*. Some laws may not yet be available.

H.R. 1246/P.L. 113–8
District of Columbia Chief Financial Officer Vacancy Act (May 1, 2013; 127 Stat. 441)

H.R. 1765/P.L. 113–9
Reducing Flight Delays Act of 2013 (May 1, 2013; 127 Stat. 443)

Last List April 17, 2013

Public Laws Electronic Notification Service (PENS)

PENS is a free electronic mail notification service of newly enacted public laws. To subscribe, go to *http://listserv.gsa.gov/archives/publaws-l.html*

Note: This service is strictly for E-mail notification of new laws. The text of laws is not available through this service. **PENS** cannot respond to specific inquiries sent to this address.