AUTHENTICATED
U.S. GOVERNMENT
INFORMATION
GPO

FEDERAL REGISTER

Vol. 78 Friday,
No. 115 June 14, 2013

Pages 35743–36082

OFFICE OF THE FEDERAL REGISTER

The **FEDERAL REGISTER** (ISSN 0097–6326) is published daily, Monday through Friday, except official holidays, by the Office of the Federal Register, National Archives and Records Administration, Washington, DC 20408, under the Federal Register Act (44 U.S.C. Ch. 15) and the regulations of the Administrative Committee of the Federal Register (1 CFR Ch. I). The Superintendent of Documents, U.S. Government Printing Office, Washington, DC 20402 is the exclusive distributor of the official edition. Periodicals postage is paid at Washington, DC.

The **FEDERAL REGISTER** provides a uniform system for making available to the public regulations and legal notices issued by Federal agencies. These include Presidential proclamations and Executive Orders, Federal agency documents having general applicability and legal effect, documents required to be published by act of Congress, and other Federal agency documents of public interest.

Documents are on file for public inspection in the Office of the Federal Register the day before they are published, unless the issuing agency requests earlier filing. For a list of documents currently on file for public inspection, see *www.ofr.gov.*

The seal of the National Archives and Records Administration authenticates the Federal Register as the official serial publication established under the Federal Register Act. Under 44 U.S.C. 1507, the contents of the **Federal Register** shall be judicially noticed.

The **Federal Register** is published in paper and on 24x microfiche. It is also available online at no charge at *www.fdsys.gov*, a service of the U.S. Government Printing Office.

The online edition of the **Federal Register** is issued under the authority of the Administrative Committee of the Federal Register as the official legal equivalent of the paper and microfiche editions (44 U.S.C. 4101 and 1 CFR 5.10). It is updated by 6:00 a.m. each day the **Federal Register** is published and includes both text and graphics from Volume 59, 1 (January 2, 1994) forward. For more information, contact the GPO Customer Contact Center, U.S. Government Printing Office. Phone 202-512-1800 or 866-512-1800 (toll free). E-mail, *gpo@custhelp.com.*

The annual subscription price for the **Federal Register** paper edition is $749 plus postage, or $808, plus postage, for a combined **Federal Register, Federal Register** Index and List of CFR Sections Affected (LSA) subscription; the microfiche edition of the **Federal Register** including the **Federal Register** Index and LSA is $165, plus postage. Six month subscriptions are available for one-half the annual rate. The prevailing postal rates will be applied to orders according to the delivery method requested. The price of a single copy of the daily **Federal Register,** including postage, is based on the number of pages: $11 for an issue containing less than 200 pages; $22 for an issue containing 200 to 400 pages; and $33 for an issue containing more than 400 pages. Single issues of the microfiche edition may be purchased for $3 per copy, including postage. Remit check or money order, made payable to the Superintendent of Documents, or charge to your GPO Deposit Account, VISA, MasterCard, American Express, or Discover. Mail to: U.S. Government Printing Office—New Orders, P.O. Box 979050, St. Louis, MO 63197-9000; or call toll free 1-866-512-1800, DC area 202-512-1800; or go to the U.S. Government Online Bookstore site, see *bookstore.gpo.gov.*

There are no restrictions on the republication of material appearing in the **Federal Register.**

How To Cite This Publication: Use the volume number and the page number. Example: 77 FR 12345.

Postmaster: Send address changes to the Superintendent of Documents, Federal Register, U.S. Government Printing Office, Washington, DC 20402, along with the entire mailing label from the last issue received.

SUBSCRIPTIONS AND COPIES

PUBLIC

Subscriptions:

Paper or fiche	**202–512–1800**
Assistance with public subscriptions	**202–512–1806**

General online information **202–512–1530; 1–888–293–6498**

Single copies/back copies:

Paper or fiche	**202–512–1800**
Assistance with public single copies	**1–866–512–1800 (Toll-Free)**

FEDERAL AGENCIES

Subscriptions:

Paper or fiche	**202–741–6005**
Assistance with Federal agency subscriptions	**202–741–6005**

FEDERAL REGISTER WORKSHOP

THE FEDERAL REGISTER: WHAT IT IS AND HOW TO USE IT

FOR: Any person who uses the Federal Register and Code of Federal Regulations.

WHO: Sponsored by the Office of the Federal Register.

WHAT: Free public briefings (approximately 3 hours) to present:

1. The regulatory process, with a focus on the Federal Register system and the public's role in the development of regulations.
2. The relationship between the Federal Register and Code of Federal Regulations.
3. The important elements of typical Federal Register documents.
4. An introduction to the finding aids of the FR/CFR system.

WHY: To provide the public with access to information necessary to research Federal agency regulations which directly affect them. There will be no discussion of specific agency regulations.

WHEN: Tuesday, July 9, 2013
9 a.m.–12:30 p.m.

WHERE: Office of the Federal Register
Conference Room, Suite 700
800 North Capitol Street, NW.
Washington, DC 20002

RESERVATIONS: (202) 741–6008

Printed on recycled paper.

Contents

Federal Register

Vol. 78, No. 115

Friday, June 14, 2013

Agricultural Marketing Service
RULES
General Cull and Handling Regulations:
Irish Potatoes Grown in Colorado; Modifications, 35743–35746

Agriculture Department
See Agricultural Marketing Service
NOTICES
Agency Information Collection Activities; Proposals, Submissions, and Approvals, 35848–35850

Arts and Humanities, National Foundation
See National Foundation on the Arts and the Humanities

Blind or Severely Disabled, Committee for Purchase From People Who Are
See Committee for Purchase From People Who Are Blind or Severely Disabled

Centers for Disease Control and Prevention
NOTICES
Agency Information Collection Activities; Proposals, Submissions, and Approvals, 35933–35935
Requests for Information:
National Institute for Occupational Health–Certified B Readers; Training and Testing; Priority Knowledge and Competency Items, 35935–35936
Statements of Organization, Functions, and Delegations of Authority, 35936

Centers for Medicare & Medicaid Services
NOTICES
Agency Information Collection Activities; Proposals, Submissions, and Approvals, 35936–35937

Coast Guard
RULES
Drawbridge Operations:
Bishop Cut, Near Stockton, CA, 35758
Charles River, Boston, MA, 35756–35757
Connecticut River, Westport, CT, 35757–35758
Harlem River, New York City, NY, 35756
St. Croix River, Stillwater, MN, 35757
Special Local Regulations:
Recurring Marine Events in the Seventh Coast Guard District, 35756
PROPOSED RULES
Safety Zones:
Recurring Events in Captain of the Port Boston Zone, 35790–35798
Revolution 3 Triathlon, Lake Erie, Sandusky Bay, Cedar Point, OH, 35787–35790
San Juan Captain of the Port Zone, 35801–35808
Swim Around Charleston, Charleston, SC, 35798–35801
Special Local Regulations:
Regattas and Marine Parades in the COTP Lake Michigan Zone, 35783–35787
NOTICES
Certificate of Alternative Compliance for the M/V MADELINE:
669921, 35945

Commerce Department
See National Oceanic and Atmospheric Administration

Committee for Purchase From People Who Are Blind or Severely Disabled
NOTICES
Procurement List; Additions and Deletions, 35874–35875

Community Development Financial Institutions Fund
NOTICES
Bond Guarantee Program; Qualified Issuer Applications and Guarantee Applications, 36018–36028
CDFI Bond Guarantee Program, 36029–36034

Consumer Product Safety Commission
NOTICES
Agency Information Collection Activities; Proposals, Submissions, and Approvals:
Clothing Textiles, Vinyl Plastic Film, 35875–35876

Defense Department
NOTICES
Information Sharing with Organizations Active on the West, East, and North Coasts of Africa, 35876–35877

Department of Transportation
See Pipeline and Hazardous Materials Safety Administration

Education Department
RULES
Final Priority:
National Institute on Disability and Rehabilitation Research; Rehabilitation Research and Training Centers, 35758–35761
Rehabilitation Engineering Research Centers, 35761–35763
PROPOSED RULES
Rehabilitation Training:
Rehabilitation Long-Term Training Program; Vocational Rehabilitation Counseling, 35808–35812
NOTICES
Applications for New Awards:
Native Hawaiian Career and Technical Education Program, 35877–35886
Rehabilitation Engineering Research Centers, 35890–35894
Rehabilitation Research and Training Centers, 35886–35890

Energy Department
See Energy Efficiency and Renewable Energy Office

Energy Efficiency and Renewable Energy Office
NOTICES
Waivers:
Panasonic Appliances Refrigeration Systems Corp. of America; Residential Refrigerator and Refrigerator–Freezer Test Procedure, 35894–35898
Samsung; Residential Refrigerator and Refrigerator–Freezer Test Procedures, 35898–35903

Environmental Protection Agency
RULES
Implementation Plans; Approvals and Promulgations:
New Jersey; Infrastructure SIP for the 1997 8-Hour Ozone and the 1997 and 2006 Fine Particulate Matter Standards, 35764–35765
State Hazardous Waste Management Program Revision; Authorizations:
North Carolina, 35766–35769
PROPOSED RULES
Regulation of Fuels and Fuel Additives:
RFS Pathways II and Technical Amendments to the RFS 2 Standards, 36042–36078
State Hazardous Waste Management Program Revision; Authorizations:
North Carolina, 35837
NOTICES
Agency Information Collection Activities; Proposals, Submissions, and Approvals:
Addendum for the Second List of Chemicals; Tier 1 Screening of Certain Chemicals, etc., 35903–35904
Certain New Chemicals; Receipt and Status Information, 35904–35909
Endocrine Disruptor Screening Program:
Final Policies and Procedures for Screening Safe Drinking Water Act Chemicals, 35909–35922
Final Second List of Chemicals and Substances for Tier 1 Screening, 35922–35928
Environmental Impact Statements; Availability, 35928–35929
Indiana List of Impaired Waters; Proposed Additions, 35929

Federal Aviation Administration
RULES
Airworthiness Directives:
Engine Alliance Turbofan Engines, 35747–35749
Rolls-Royce Deutschland Ltd and Co. KG Turbofan Engines, 35752–35754
The Boeing Company Airplanes, 35749–35752
Special Conditions:
Cirrus Design Corporation, Model SF50; Fire Extinguishing for Upper Aft Fuselage Mounted Engine; Withdrawal, 35747
PROPOSED RULES
Airworthiness Directives:
MD Helicopters, Inc. (MDHI), Helicopters, 35773–35776
Class E Airspace; Establishments:
Cleveland, TN, 35776
NOTICES
Waiver of Aeronautical Land-Use Assurance:
Quad City International Airport, Moline, IL, 36013

Federal Deposit Insurance Corporation
NOTICES
Updated Listing of Financial Institutions in Liquidation, 35929–35930

Federal Maritime Commission
NOTICES
Meetings; Sunshine Act, 35930

Federal Railroad Administration
NOTICES
Petitions for Waivers of Compliance, 36013–36014

Federal Reserve System
NOTICES
Changes in Bank Control:
Acquisitions of Shares of a Bank or Bank Holding Company, 35930
Formations of, Acquisitions by, and Mergers of Bank Holding Companies, 35930–35931

Federal Trade Commission
NOTICES
Early Terminations of the Waiting Period under Premerger Notification Rules, 35931–35933

Fish and Wildlife Service
PROPOSED RULES
Meetings:
Migratory Bird Hunting; Supplemental Proposals for Migratory Game Bird Hunting Regulations for 2013–14 Hunting Season, 35844–35847
NOTICES
Low-Effect Habitat Conservation Plans; Availability, etc.:
Santa Cruz Graham Hill Water Treatment Plant; Santa Cruz County, CA, 35951–35953
Permit Applications:
Endangered and Threatened Wildlife and Plants Recovery Permit, 35953–35954

Food and Drug Administration
NOTICES
Draft Guidance for Industry and Staff; Availability:
Content of Premarket Submissions for Management of Cybersecurity in Medical Devices, 35940
Decisions for Investigational Device Exemption Clinical Investigations, 35937–35939
Guidance for Industry; Availability:
Codevelopment of Two or More New Investigational Drugs for Use in Combination, 35940–35942

Health and Human Services Department
See Centers for Disease Control and Prevention
See Centers for Medicare & Medicaid Services
See Food and Drug Administration
See National Institutes of Health

Homeland Security Department
See Coast Guard
See Transportation Security Administration

Housing and Urban Development Department
NOTICES
Federal Property Suitable as Facilities to Assist the Homeless, 35950–35951

Interior Department
See Fish and Wildlife Service
See Land Management Bureau
See National Park Service
See Surface Mining Reclamation and Enforcement Office

Justice Department
NOTICES
Tribal Jurisdiction over Crimes of Domestic Violence; Pilot Project, 35961–35974

Labor Department
See Mine Safety and Health Administration
See Workers Compensation Programs Office

Land Management Bureau
NOTICES
Environmental Impact Statements; Availability, etc.:
SunZia Southwest Transmission Project in New Mexico and Arizona and Proposed Resource Management Plan Amendments, 35954–35956
Meetings:
Utah Resource Advisory Council Subgroup Conference Call, 35956–35957
Public Land Orders:
No. 7815; Extension of No. 6997; Montana, 35957
Resource Management Plans and Environmental Impact Statements; Availability, etc.:
Central Yukon Planning Area Alaska, 35957–35959
South Dakota Field Office, 35959–35960

Maritime Administration
RULES
Regulated Transactions Involving Documented Vessels and Other Maritime Interests:
Retrospective Review under E.O. 13563, 35769–35771
NOTICES
Applications:
Liberty Natural Gas, LLC; Port Ambrose Deepwater Port, 36014–36016
Waivers:
Administrative Waiver of the Coastwise Trade Laws, 36016

Mine Safety and Health Administration
NOTICES
Agency Information Collection Activities; Proposals, Submissions, and Approvals:
Coal Mine Rescue Teams; Emergency Medical Assistance, etc., 35974–35975
Safety Standards for Underground Coal Mine Ventilation, etc., 35975–35976
Petitions:
Mandatory Safety Standards, Modification, 35976–35981

National Foundation on the Arts and the Humanities
NOTICES
Meetings:
Humanities Panel, 35982–35984

National Institutes of Health
PROPOSED RULES
National Institute on Minority Health and Health Disparities Research Endowments, 35837–35844
NOTICES
Agency Information Collection Activities; Proposals, Submissions, and Approvals:
Palliative Care; Conversations Matter Evaluation, 35942
Meetings:
Center for Scientific Review, 35943–35945
National Institute of General Medical Sciences, 35942–35943

National Oceanic and Atmospheric Administration
RULES
Fisheries of the Exclusive Economic Zone Off Alaska:
Atka Mackerel in the Bering Sea and Aleutian Islands Management Area, 35771–35772
PROPOSED RULES
Boundary Expansion of Thunder Bay National Marine Sanctuary, 35776–35781
NOTICES
Takes of Marine Mammals Incidental to Specified Activities:
Marine Seismic Survey in the Beaufort Sea, AK, 35851–35874

National Park Service
NOTICES
Minor Boundary Revision at Mojave National Preserve, 35960–35961

National Science Foundation
NOTICES
Meetings:
Proposal Review Panel for Ocean Sciences, 35984

Nuclear Regulatory Commission
RULES
Advance Notification to Native American Tribes of Transportation of Certain Shipments of Nuclear Waste, 35746–35747
NOTICES
Authorizations to Use Authority Granted under the Atomic Energy Act:
Interim Eligible Class of Licensed Facilities, 35984–35989
Environmental Impact Statements; Availability, etc.:
Tennessee Valley Authority Watts Bar Nuclear Plant, Unit 2, 35989–35990
Orders Modifying Licenses with Regard to Reliable Hardened Containment Vents, etc.:
All Operating Boiling-Water Reactor Licensees with Mark I and Mark II Containments, 35990–35996

Pension Benefit Guaranty Corporation
RULES
Benefits Payable in Terminated Single-Employer Plans and Allocation of Assets in Single-Employer Plans:
Interest Assumptions for Valuing and Paying Benefits, 35754–35756

Pipeline and Hazardous Materials Safety Administration
NOTICES
Agency Information Collection Activities; Proposals, Submissions, and Approvals:
Pipeline Safety, 36016–36017

Postal Regulatory Commission
PROPOSED RULES
Revisions to Procedural Rules, 35812–35826
Unfair Competitive Advantages; Enhancement of the Formal Complaint Process, 35826–35836

Securities and Exchange Commission
NOTICES
Self-Regulatory Organizations; Proposed Rule Changes:
EDGA Exchange, Inc., 36006–36010
EDGX Exchange, Inc., 35996–36002
NASDAQ OMX PHLX LLC, 36002
Options Clearing Corp., 36002–36006

Small Business Administration
NOTICES
Major Disaster Declarations:
Illinois, 36010
Iowa, 36010–36011
Meetings:
Region VII Small Business Regulatory Fairness Board, Federal Regulatory Enforcement Fairness Hearing, 36011

Social Security Administration
NOTICES
Senior Executive Service Performance Review Board Membership, 36011

State Department
NOTICES
Agency Information Collection Activities; Proposals, Submissions, and Approvals:
Application to Determine Returning Resident Status, 36011–36012
Export Declaration of Defense Technical Data or Services, 36012–36013

Surface Mining Reclamation and Enforcement Office
PROPOSED RULES
North Dakota Regulatory Program, 35781–35783

Surface Transportation Board
NOTICES
Operation Exemptions:
MCM Rail Services LLC, d/b/a Baltimore Industrial Railroad; Hilco SP Rail, LLC, 36017–36018

Transportation Department
See Federal Aviation Administration
See Federal Railroad Administration
See Maritime Administration
See Pipeline and Hazardous Materials Safety Administration
See Surface Transportation Board
See Transportation Security Administration

Transportation Security Administration
NOTICES
Security Training Programs for Surface Mode Employees; Comments Request, 35945–35950

Treasury Department
See Community Development Financial Institutions Fund
See United States Mint

United States Mint
NOTICES
Meetings:
Citizens Coinage Advisory Committee, 36034–36035

Veterans Affairs Department
NOTICES
Agency Information Collection Activities; Proposals, Submissions, and Approvals:
Beneficiary Travel Mileage Reimbursement Application, 36035
Privacy Act; Systems of Records, 36035–36039

Workers Compensation Programs Office
NOTICES
Agency Information Collection Activities; Proposals, Submissions, and Approvals, 35981–35982
Agency Information Collection Activities; Proposals, Submissions, and Approvals:
Division of Coal Mine Workers' Compensation, 35982

Separate Parts In This Issue

Part II
Environmental Protection Agency, 36042–36078

Reader Aids
Consult the Reader Aids section at the end of this page for phone numbers, online resources, finding aids, reminders, and notice of recently enacted public laws.

To subscribe to the Federal Register Table of Contents LISTSERV electronic mailing list, go to http://listserv.access.gpo.gov and select Online mailing list archives, FEDREGTOC-L, Join or leave the list (or change settings); then follow the instructions.

CFR PARTS AFFECTED IN THIS ISSUE

A cumulative list of the parts affected this month can be found in the Reader Aids section at the end of this issue.

3 CFR

Administrative Orders:

Notices:

Notice of June 13, 2013 36081

7 CFR

948 35743

10 CFR

71 35746

73 35746

14 CFR

23 35747

39 (3 documents) 35747, 35749, 35752

Proposed Rules:

39 35773

71 35776

15 CFR

Proposed Rules:

922 35776

29 CFR

4022 35754

4044 35754

30 CFR

Proposed Rules:

934 35781

33 CFR

100 35756

117 (5 documents) 35756, 35757, 35758

Proposed Rules:

100 35783

165 (4 documents) 35787, 35790, 35798, 35801

34 CFR

Ch. III (2 documents) 35758, 35761

Proposed Rules:

Ch. III 35808

39 CFR

Proposed Rules:

3001 35812

3030 35826

3032 35826

3033 35826

40 CFR

52 35764

271 35766

Proposed Rules:

80 36042

271 35837

42 CFR

Proposed Rules:

52i 35837

46 CFR

221 35769

50 CFR

679 35771

Proposed Rules:

20 35844

Rules and Regulations

Federal Register
Vol. 78, No. 115
Friday, June 14, 2013

This section of the FEDERAL REGISTER contains regulatory documents having general applicability and legal effect, most of which are keyed to and codified in the Code of Federal Regulations, which is published under 50 titles pursuant to 44 U.S.C. 1510.

The Code of Federal Regulations is sold by the Superintendent of Documents. Prices of new books are listed in the first FEDERAL REGISTER issue of each week.

DEPARTMENT OF AGRICULTURE

Agricultural Marketing Service

7 CFR Part 948

[Doc. No. AMS–FV–13–0001; FV13–948–1 IR]

Irish Potatoes Grown in Colorado; Modification of the General Cull and Handling Regulation for Area No. 2

AGENCY: Agricultural Marketing Service, USDA.

ACTION: Interim rule with request for comments.

SUMMARY: This interim rule modifies the size requirements for potatoes handled under the Colorado potato marketing order, Area No. 2 (order). The order regulates the handling of Irish potatoes grown in Colorado and is administered locally by the Colorado Potato Administrative Committee, Area No. 2 (Committee). This action revises the 1-inch minimum to 1¾-inch maximum diameter size allowance for U.S. Commercial and better grade potatoes contained in the order's handling regulation for Area 2 to ¾-inch minimum to 1⅝-inch maximum diameter. In addition, this action revises the minimum size requirement under the order's general cull regulation to ¾-inch diameter. As required under section 8e of the Agricultural Marketing Agreement Act of 1937, this action also revises the size requirements for imported round type potatoes, other than red-skinned varieties. This change is expected to facilitate the handling and marketing of the Area No. 2 potato crop, provide producers and handlers with increased returns, and offer consumers increased potato purchasing options.

DATES: Effective June 15, 2013; comments received by August 13, 2013 will be considered prior to issuance of a final rule.

ADDRESSES: Interested persons are invited to submit written comments concerning this interim rule. Comments should be sent to the Docket Clerk, Marketing Order and Agreement Division, Fruit and Vegetable Program, AMS, USDA, 1400 Independence Avenue SW., STOP 0237, Washington, DC 20250–0237; Fax: (202) 720–8938; or Internet: *http://www.regulations.gov.* All comments should reference the document number and the date and page number of this issue of the **Federal Register** and will be made available for public inspection in the office of the Docket Clerk during regular business hours, or can be viewed at: *http://www.regulations.gov.* All comments submitted in response to this interim rule will be included in the record and will be made available to the public. Please be advised that the identity of the individuals or entities submitting the comments will be made public on the Internet at the address provided above.

FOR FURTHER INFORMATION CONTACT: Barry Broadbent, Marketing Specialist, or Gary Olson, Regional Director, Northwest Marketing Field Office, Marketing Order and Agreement Division, Fruit and Vegetable Program, AMS, USDA; Telephone: (503) 326–2724, Fax: (503) 326–7440, or Email: *Barry.Broadbent@ams.usda.gov* or *GaryD.Olson@ams.usda.gov.*

Small businesses may request information on complying with this regulation by contacting Jeffrey Smutny, Marketing Order and Agreement Division, Fruit and Vegetable Program, AMS, USDA, 1400 Independence Avenue SW., STOP 0237, Washington, DC 20250–0237; Telephone: (202) 720–2491, Fax: (202) 720–8938, or Email: *Jeffrey.Smutny@ams.usda.gov.*

SUPPLEMENTARY INFORMATION: This interim rule is issued under Marketing Agreement No. 97 and Marketing Order No. 948, both as amended (7 CFR part 948), regulating the handling of Irish potatoes grown in Colorado, hereinafter referred to as the ''order.'' The order is effective under the Agricultural Marketing Agreement Act of 1937, as amended (7 U.S.C. 601–674), hereinafter referred to as the ''Act.''

This interim rule is also issued under section 8e of the Act, which provides that whenever certain specified commodities, including potatoes, are regulated under a Federal marketing order, the importation of these commodities into the United States is prohibited unless they meet the same or comparable grade, size, quality, or maturity requirements as those in effect for the domestically produced commodities.

The Department of Agriculture (USDA) is issuing this interim rule in conformance with Executive Order 12866.

This interim rule has been reviewed under Executive Order 12988, Civil Justice Reform. This interim rule is not intended to have retroactive effect.

The Act provides that administrative proceedings must be exhausted before parties may file suit in court. Under section 608c(15)(A) of the Act, any handler subject to an order may file with USDA a petition stating that the order, any provision of the order, or any obligation imposed in connection with the order is not in accordance with law and request a modification of the order or to be exempted therefrom. A handler is afforded the opportunity for a hearing on the petition. After the hearing USDA would rule on the petition. The Act provides that the district court of the United States in any district in which the handler is an inhabitant, or has his or her principal place of business, has jurisdiction to review USDA's ruling on the petition, provided an action is filed not later than 20 days after the date of the entry of the ruling.

There are no administrative procedures which must be exhausted prior to any judicial challenge to the provisions of import regulation issued under section 8e of the Act.

This action modifies the size requirements for potatoes handled under the order's general cull regulation and handling regulation for Area 2. This interim rule relaxes the 1-inch minimum to 1¾-inch maximum size allowance for U.S. Commercial or better grade potatoes handled under the order to ¾-inch minimum to 1⅝-inch maximum diameter (Creamer size, as designated in the U.S. Standards for Grades of Potatoes). This action also relaxes the minimum size requirement of the general cull regulation to ¾-inch diameter.

Prior to this change, the smallest potatoes that could be shipped outside the State of Colorado under the order were 1-inch to 1¾-inch diameter potatoes that met or exceeded the requirements of the U.S. Commercial

grade. Potatoes measuring less than 1-inch were not allowed to be shipped outside the State, regardless of grade. This action is a relaxation of the order's regulations and will allow shipments of Creamer size potatoes (¾-inch to 1⅝-inch diameter), if such potatoes otherwise meet or exceed the requirements of the U.S. Commercial grade. None of the other size requirements contained in the handling regulation are impacted by this action. This change was unanimously recommended by the Committee at a meeting held on December 20, 2012.

Section 948.22 authorizes the issuance of grade, size, quality, maturity, pack, and container regulations for potatoes grown in the order's production area. Section 948.21 authorizes the modification, suspension, or termination of regulations issued pursuant to § 948.22. Section 948.20 establishes the requirements of the general cull regulation. The Secretary may suspend or modify the general cull regulation provisions contained in § 948.20 upon the recommendation of the Committee, or on other available information.

Under the Colorado potato marketing order, the State of Colorado is divided into three areas of regulation for marketing order purposes. These include: Area 1, commonly known as the Western Slope; Area 2, commonly known as San Luis Valley; and, Area 3, which consists of the remaining producing areas within the State of Colorado not included in the definition of Area 1 or Area 2. Currently, the order only regulates the handling of potatoes produced in Area 2 and Area 3. Regulation for Area 1 has been suspended.

The grade, size, and maturity requirements specific to the handling of potatoes grown in Area 2 are contained in § 948.386 of the order. Additionally, the minimum grade and size requirements established under the order's general cull regulation are contained in § 948.126. The handling regulation requires that all potatoes handled under the order meet the minimum requirements of the U.S. No. 2 grade, and be 2 inches or greater in diameter. Smaller size potatoes may be handled, if such potatoes otherwise meet the requirements of certain higher grade standards. For all varieties, size B potatoes (1½-inch minimum to 2¼-inch maximum diameter as designated in the U.S. Standards for Grade of Potatoes) may be handled under the order, if such potatoes meet or exceed the requirements of the U.S. Commercial grade. In addition, prior to this interim rule, 1-inch to 1¾-inch diameter potatoes that met or exceeded the requirements of the U.S. Commercial grade were also allowed to be handled under the order.

At the December 20, 2012, Committee meeting, industry participants indicated to the Committee that there is an emerging market for smaller size U.S. Commercial grade potatoes sold in consumer packs and included in certain value added potato products. They further stated that the order's current size requirements (1-inch diameter being the smallest potato allowed to be handled) precludes them from supplying this growing and profitable market. Relaxing the size requirements to allow shipments of such higher grade, smaller size potatoes will allow area handlers to compete with other domestic potato producing regions for this developing market segment. This change effectively lowers the allowable minimum diameter for U.S. Commercial and better grade potatoes to ¾-inch, which is in line with the minimum size requirements contained in the handling regulations of the other domestic potato marketing orders.

Relaxing the size requirements to allow shipments of smaller size potatoes will make more small potatoes available to consumers and will allow Area 2 handlers to move more of the area's potato production into the fresh market. This change is expected to benefit producers, handlers, and consumers of potatoes.

Section 8e of the Act provides that when certain domestically produced commodities, including potatoes, are regulated under a Federal marketing order, imports of that commodity must meet the same or comparable grade, size, quality, and maturity requirements as the domestically produced product. Minimum grade, size, quality, and maturity requirements for potatoes imported into the United States are currently in effect under the import regulations contained in § 980.1 (7 CFR 980.1). The import regulations distinguish between each of the three major types of potatoes handled domestically: Red-skinned, round types; long types; and all other round types.

Section 980.1(a)(2)(ii) specifies that imports of round type potatoes, other than red-skinned varieties, are in most direct competition with potatoes of the same type produced in Area 2, Colorado (San Luis Valley) and covered by Marketing Order No. 948. Further, section 980.1(b)(2) stipulates that, through the entire year, the grade, size, quality, and maturity requirements of Marketing Order No. 948 applicable to potatoes of the round type, other than red-skinned varieties, shall be the respective grade, size, quality, and maturity requirements for imports of that type potatoes. As such, the relaxation of the size requirements effectuated by this interim rule for domestic potatoes covered by the order likewise relaxes the size requirements for U.S. Commercial and better grade round type potatoes, other than red-skinned varieties, that are imported into the U.S. No change to the regulatory text is necessary to accomplish this action.

Prior to this action, 1-inch minimum diameter to 1¾-inch maximum diameter was the smallest size range of potatoes allowed to be imported. As a result of the change in the order's handling regulation, and pursuant to section 8e of the Act, importers may now ship Creamer size (¾-inch minimum to 1⅝-inch maximum diameter) U.S. Commercial and better grade round type potatoes, other than red-skinned varieties, into the U.S. market.

This action allows potato handlers and importers to better respond to the changing demands of the U.S. potato market. The consumers' increasing preference for small size potatoes applies to imported potatoes as well as domestic potatoes. Thus, domestic handlers and importers should benefit by increasing sales to this emerging domestic market segment.

Initial Regulatory Flexibility Analysis

Pursuant to requirements set forth in the Regulatory Flexibility Act (RFA) (5 U.S.C. 601–612), the Agricultural Marketing Service (AMS) has considered the economic impact of this action on small entities. Accordingly, AMS has prepared this initial regulatory flexibility analysis.

The purpose of the RFA is to fit regulatory actions to the scale of business subject to such actions in order that small businesses will not be unduly or disproportionately burdened. Marketing orders issued pursuant to the Act, and the rules issued thereunder, are unique in that they are brought about through group action of essentially small entities acting on their own behalf.

There are approximately 80 handlers of Colorado Area No. 2 potatoes subject to regulation under the order and approximately 180 producers in the regulated production area. Small agricultural service firms are defined by the Small Business Administration as those having annual receipts of less than $7,000,000, and small agricultural producers are defined as those having annual receipts of less than $750,000. (13 CFR 121.201)

During the 2011–2012 marketing year, the most recent full marketing year for which statistics are available, 15,072,963 hundredweight of Colorado Area No. 2 potatoes were inspected under the order and sold into the fresh market. Based on an estimated average f.o.b. price of $12.60 per hundredweight, the Committee estimates that 66 Area No. 2 handlers, or about 83 percent, had annual receipts of less than $7,000,000. In view of the foregoing, the majority of Colorado Area No. 2 potato handlers may be classified as small entities.

In addition, based on information provided by the National Agricultural Statistics Service, the average producer price for the 2011 Colorado fall potato crop was $10.70 per hundredweight. Multiplying $10.70 by the shipment quantity of 15,072,963 hundredweight yields an annual crop revenue estimate of $161,280,704. The average annual fresh potato revenue for each of the 180 Colorado Area No. 2 potato producers is therefore calculated to be approximately $896,000 ($161,280,704 divided by 180), which is greater than the SBA threshold of $750,000. Consequently, on average, many of the Area No. 2 Colorado potato producers may not be classified as small entities.

This interim rule relaxes the size allowance for U.S. Commercial and better grade potatoes in the order's handling regulation and modifies the size requirement in the order's general cull regulation. Prior to this action, the smallest size range allowed to be handled under the order was 1-inch minimum diameter to 1¾-inch maximum diameter if the potatoes were otherwise U.S. Commercial or better grade. As a result of this interim rule, Creamer size (¾-inch to 1⅝-inch diameter) U.S. Commercial and better grade potatoes are now allowed be handled under the order. All other size requirements in the order's handling regulation remain unchanged. Authority for this action is contained in §§ 948.20, 948.21, and 948.22.

This relaxation is expected to benefit the producers, handlers, and consumers of Colorado Area 2 potatoes by allowing a greater quantity of fresh potatoes from the production area to enter the market. This anticipated increase in volume is expected to translate into greater returns for handlers and producers, and more purchasing options for consumers.

After discussing possible alternatives to this interim rule, the Committee determined that a relaxation in the size requirement for U.S. Commercial and better grade potatoes will meet the industry's current needs while maintaining the potato quality objectives of the order. During its deliberations, the Committee considered making no changes to the handling regulation, as well as relaxing the size requirement for all U.S. No. 2 and better grade potatoes. The Committee believes that a relaxation in the handling regulation for small potatoes is necessary to allow handlers to pursue new markets, but lowering the size requirements for all potatoes that are U.S. No. 2 and better grade could erode the quality reputation of the area's production. Therefore, the Committee found that there were no other viable alternatives to the relaxation of the size requirements as recommended.

AMS is committed to complying with the E-Government Act, to promote the use of the Internet and other information technologies to provide increased opportunities for citizen access to Government information and services, and for other purposes.

In accordance with the Paperwork Reduction Act of 1995, (44 U.S.C. Chapter 35), the order's information collection requirements have been previously approved by the Office of Management and Budget (OMB) and assigned OMB No. 0581–0178 (Generic Vegetable and Specialty Crops). No changes in those requirements as a result of this action are necessary. Should any changes become necessary, they would be submitted to OMB for approval.

This interim rule will not impose any additional reporting or recordkeeping requirements on either small or large potato handlers and importers. As with all Federal marketing order programs, reports and forms are periodically reviewed to reduce information requirements and duplication by industry and public sector agencies. In addition, USDA has not identified any relevant Federal rules that duplicate, overlap, or conflict with this interim rule.

Further, the Committee's meeting was widely publicized throughout the Colorado potato industry and all interested persons were invited to attend the meeting and participate in Committee deliberations. Like all Committee meetings, the December 20, 2012, meeting was a public meeting and all entities, both large and small, were able to express their views on this issue. Finally, interested persons are invited to submit comments on this interim rule, including the regulatory and informational impacts of this action on small businesses.

A small business guide on complying with fruit, vegetable, and specialty crop marketing agreements and orders may be viewed at: *www.ams.usda.gov/MarketingOrdersSmallBusinessGuide.* Any questions about the compliance guide should be sent to Jeffrey Smutny at the previously mentioned address in the **FOR FURTHER INFORMATION CONTACT** section.

This interim rule invites comments on a modification of the size requirements prescribed under the Colorado potato marketing order. Any comments received will be considered prior to the finalization of this interim rule.

After consideration of all relevant material presented, including the Committee's recommendation, and other information, it is hereby found that this interim rule, as hereinafter set forth, will tend to effectuate the declared policy of the Act.

In accordance with section 8e of the Act, the United States Trade Representative has concurred with the issuance of this interim rule.

Pursuant to 5 U.S.C. 553, it is also found and determined upon good cause that it is impracticable, unnecessary, and contrary to the public interest to give preliminary notice prior to putting this interim rule into effect and that good cause exists for not postponing the effective date of this interim rule until 30 days after publication in the **Federal Register** because: (1) This action is a relaxation of the current handling regulations; (2) handlers are already shipping potatoes from the 2012–2013 crop and may want to take advantage of this relaxation as soon as possible; (3) handlers are aware of this interim rule, which was initiated by the industry and unanimously recommended by the Committee at a public meeting during which interested parties had an opportunity to provide input; and (4) this interim rule provides a 60-day comment period and any comments received will be considered prior to finalization of this interim rule.

List of Subjects in 7 CFR Part 948

Marketing agreements, Potatoes, Reporting and recordkeeping requirements.

For the reasons set forth in the preamble, 7 CFR part 948 is amended as follows:

PART 948—IRISH POTATOES GROWN IN COLORADO

■ 1. The authority citation for 7 CFR part 948 continues to read as follows:

Authority: 7 U.S.C. 601–674.

■ 2. In § 948.126, paragraph (a) is revised to read as follows:

§ 948.126 General cull regulation.

(a) No handler shall handle potatoes grown in the State of Colorado which do

not meet the requirements of U.S. No. 2 or better grade, or are less than ¾-inch in diameter.

* * * * *

■ 3. In § 948.386, the heading of paragraph (a)(4) is revised to read as follows:

§ 948.386 Handling regulation.

* * * * *

(a) * * *

(4) *¾-inch minimum diameter to 1⅝-inch maximum diameter (Creamer).*

* * *

* * * * *

Dated: June 11, 2013.

Rex A. Barnes,

Associate Administrator, Agricultural Marketing Service.

[FR Doc. 2013–14175 Filed 6–13–13; 8:45 am]

BILLING CODE 3410–02–P

NUCLEAR REGULATORY COMMISSION

10 CFR Parts 71 and 73

[NRC–1999–0005]

RIN 3150–AG41

Advance Notification to Native American Tribes of Transportation of Certain Shipments of Nuclear Waste

AGENCY: Nuclear Regulatory Commission.

ACTION: Final rule; implementation.

SUMMARY: The U.S. Nuclear Regulatory Commission (NRC) licensees are currently required to provide advance notice to participating Federally-recognized Tribal governments regarding shipments of irradiated reactor fuel and certain nuclear wastes that pass within or across their reservations. Agreement State licensees will be required to provide advance notifications for certain shipments of radioactive material at the time the applicable Agreement State implements its requirements. The NRC is maintaining and providing a list of Tribal contacts and an interactive map of Tribal boundaries of participating Federally-recognized Tribes that is available on the NRC's public Web site. The list will be published annually in the **Federal Register**.

DATES: This document is effective on June 14, 2013.

ADDRESSES: Please refer to Docket ID NRC–1999–0005 when contacting the NRC about the availability of information for this document. You may access information related to this document, which the NRC possesses and is publicly available, by any of the following methods:

- *Federal Rulemaking Web site:* Go to *http://www.regulations.gov* and search for Docket ID NRC–1999–0005. Address questions about NRC dockets to Carol Gallagher; telephone: 301–492–3668; email: *Carol.Gallagher@nrc.gov.* For technical questions, contact the individual(s) listed in the **FOR FURTHER INFORMATION CONTACT** section of this final rule.
- *NRC's Agencywide Documents Access and Management System (ADAMS):* You may access publicly available documents online in the NRC Library at *http://www.nrc.gov/reading-rm/adams.html.* To begin the search, select ''ADAMS Public Documents'' and then select ''*Begin Web-based ADAMS Search.*'' For problems with ADAMS, please contact the NRC's Public Document Room (PDR) reference staff at 1–800–397–4209, 301–415–4737, or by email to *pdr.resource@nrc.gov.* The ADAMS accession number for each document referenced in this document (if that document is available in ADAMS) is provided the first time that a document is referenced.
- *NRC's PDR:* You may examine and purchase copies of public documents at the NRC's PDR, Room O1–F21, One White Flint North, 11555 Rockville Pike, Rockville, Maryland 20852.

FOR FURTHER INFORMATION CONTACT: James Firth, Office of Federal and State Materials and Environmental Management Programs; U.S. Nuclear Regulatory Commission, Washington, DC 20555–0001; telephone: 301–415–6628; email: *James.Firth@nrc.gov.*

SUPPLEMENTARY INFORMATION: On January 6, 1982 (47 FR 596 and 47 FR 600), the NRC published regulations that require licensees to provide advance notice of certain shipments of irradiated reactor fuel and nuclear waste to State Governors or their designees. On June 11, 2012 (77 FR 34194), the NRC amended the advance notification requirements of parts 71 and 73 of Title 10 of the *Code of Federal Regulations* (10 CFR) requiring licensees to provide advance notice to participating Federally-recognized Tribal governments regarding shipments of irradiated reactor fuel and certain nuclear wastes that pass within or across their reservations (i.e., Advance Tribal Notification Rule). The NRC's licensees are currently required to provide advance notification to participating Federally-recognized Tribal governments. Agreement State licensees will be required to provide advance notifications for certain shipments of radioactive material at the time the applicable Agreement State implements its requirements.

The licensees must provide to participating Tribal officials, or their designees, advance notice of shipments of irradiated reactor fuel meeting the 10 CFR 73.37 criteria and other nuclear wastes meeting the criteria in 10 CFR 71.97 before passing through or crossing the border of their reservations. Specifically, 10 CFR 71.97 requires licensees to provide advance notice of shipments of certain licensed material that meet the following requirements: (1) The material is required to be shipped in Type B packaging; (2) the licensed material is being transported within or across the boundary of the Tribe's reservation and the shipment is being transported outside of the licensee's place of use en route to a disposal facility or to a collection point for transport to a disposal facility; and (3) the quantity of licensed material in a single package exceeds at least one of the following: (a) 3000 times the A_1 value of the radionuclides as specified in appendix A, Table A–1 in 10 CFR part 71 for special form radioactive material; (b) 3000 times the A_2 value of the radionuclides as specified in appendix A, Table A–1 in 10 CFR part 71 for normal form radioactive material; or (c) 1000 terabecquerels (27,000 curies).

As required by 10 CFR 73.37, licensees must provide advance notice of shipments of irradiated reactor fuel in excess of 100 grams in net weight of irradiated fuel, which has a total external radiation dose rate in excess of 1 Gray (100 rad) per hour at a distance of 0.91 meters (3 feet) from any accessible surface without intervening shielding. The licensee is required to make this notification to any Tribe for which the irradiated reactor fuel is being transported within its Tribal reservation or across its Tribal reservation boundaries.

Since the publication of the Advance Tribal Notification Rule, the NRC revised the advance notification requirements for certain shipments of irradiated reactor fuel in 10 CFR 73.37—''Physical Protection of Byproduct Material'' (March 19, 2013; 78 FR 16922). The revision requires licensees to provide advance notification for certain shipments of irradiated reactor fuel that are 100 grams or less in net weight of irradiated fuel. The compliance date of this new regulatory provision is March 19, 2014.

For the purposes of the Advance Tribal Notification Rule, an ''Indian tribe'' is defined as an Indian or Alaska Native tribe, band, nation, pueblo, village, or community that the Secretary

of the Interior acknowledges to exist as an Indian tribe pursuant to the Federally Recognized Indian Tribe List Act of 1994. Tribal participation is voluntary. Tribes may express interest in participating in the advance notifications and may discontinue their participation at any time. Currently, 27 Tribes have expressed interest in receiving the advance notifications. Tribes meeting the criteria may receive advance notifications after certifying that the Safeguards Information associated with the shipments of these materials will be adequately protected by complying with the requirements in 10 CFR 73.21 and 73.22.

After the NRC receives this certification and the contact information for the Tribal official or Tribal official's designee, the NRC will add the Tribe to the list of advance notification contacts and the Tribal reservation information to the interactive map of Tribal boundaries at *http://www.nrc.gov/about-nrc/state-tribal/tribal-advance-notification.html.* Current contact information can also be accessed throughout the year at *http://nrc-stp.ornl.gov/special/designee.pdf.* The list is published annually in the **Federal Register** on or about June 30 to reflect any changes in information. Licensees should check these sites to determine whether they need to provide advance notification when they have any shipments meeting the criteria in 10 CFR 71.97 or 73.37 that will pass within or across a participating Tribe's reservation.

Dated at Rockville, Maryland, this 10th day of June 2013.

For the U.S. Nuclear Regulatory Commission.

Melanie A. Galloway,

Acting Director, Division of Intergovernmental Liaison and Rulemaking, Office of Federal and State Materials and Environmental Management Programs.

[FR Doc. 2013–14159 Filed 6–13–13; 8:45 am]

BILLING CODE 7590–01–P

DEPARTMENT OF TRANSPORTATION

Federal Aviation Administration

14 CFR Part 23

[Docket No. CE305; Special Conditions No. 23–245–SC]

Special Conditions: Cirrus Design Corporation, Model SF50; Fire Extinguishing for Upper Aft Fuselage Mounted Engine; Withdrawal

AGENCY: Federal Aviation Administration (FAA), DOT.

ACTION: Final special conditions; withdrawal.

SUMMARY: The FAA is withdrawing a previously published notice granting special conditions for the Cirrus Design Corporation model SF50 airplane. We are withdrawing Special Condition No. 23–245–SC through mutual agreement with Cirrus Design Corporation.

DATES: This special condition published on April 20, 2010 at 75 FR 20518 is withdrawn, effective June 14, 2013.

FOR FURTHER INFORMATION CONTACT: Leslie B. Taylor, Federal Aviation Administration, Small Airplane Directorate, Aircraft Certification Service, 901 Locust, Room 301, Kansas City, MO 64106; telephone (816) 329–4134; facsimile (816) 329–4090, email *leslie.b.taylor@faa.gov.*

SUPPLEMENTARY INFORMATION:

Background

On April 20, 2010, the FAA published Special Condition No. 23–245–SC for the Cirrus Design Corporation new model SF50. The model SF50 is a 7-seat (5 adults and 2 children), pressurized, retractable gear, carbon composite, airplane with one turbofan engine mounted partially in the upper aft fuselage.

The single turbofan engine is mounted on the upper aft fuselage, not in the pilot's line of site. Upper aft fuselage mounted engine installations, along with the need to protect such installed engines from fires, were not envisioned in the development of the part 23 normal category regulations.

The model SF50 certification project was granted an extension on September 19, 2011. Amendment 23–62 (76 FR 75736), published December 2, 2011, incorporated Special Condition No. 23–245–SC. On December 11, 2012, Cirrus Design Corporation elected to adjust the model SF50 certification basis to 14 CFR part 23, Amendment 62.

Reason for Withdrawal

The FAA is withdrawing Special Condition No. 23–245–SC because Cirrus elected to revise the model SF50 certification basis to Amendment 23–62.

The authority citation for this Special Condition withdrawal is 49 U.S.C. 106(g), 40113 and 44701; 14 CFR 21.16 and 21.17; and 14 CFR 11.38 and 11.19.

Conclusion

Withdrawal of this special condition does not preclude the FAA from issuing another notice on the subject matter in the future or committing the agency to any future course of action.

Issued in Kansas City, Missouri on June 5, 2013.

Earl Lawrence,

Small Airplane Directorate, Aircraft Certification Service.

[FR Doc. 2013–14151 Filed 6–13–13; 8:45 am]

BILLING CODE 4910–13–P

DEPARTMENT OF TRANSPORTATION

Federal Aviation Administration

14 CFR Part 39

[Docket No. FAA–2012–1329; Directorate Identifier 2012–NE–46–AD; Amendment 39–17479; AD 2013–12–02]

RIN 2120–AA64

Airworthiness Directives; Engine Alliance Turbofan Engines

AGENCY: Federal Aviation Administration (FAA), DOT.

ACTION: Final rule.

SUMMARY: We are adopting a new airworthiness directive (AD) for certain Engine Alliance GP7270 and GP7277 turbofan engines. This AD was prompted by damage to the high-pressure compressor (HPC) stage 7–9 spool caused by failure of the baffle plate feature on affected HPC stage 6 disks. This AD requires initial and repetitive borescope inspections of the baffle plate feature and removal from service of the HPC stage 6 disk if the plate is missing material. This AD also requires mandatory removal from service of these HPC stage 6 disks at the next HPC module exposure. We are issuing this AD to prevent failure of the HPC stage 7–9 spool, uncontained engine failure, and damage to the airplane.

DATES: This AD is effective July 19, 2013.

Examining the AD Docket

You may examine the AD docket on the Internet at *http://www.regulations.gov;* or in person at the Docket Management Facility between 9 a.m. and 5 p.m., Monday through Friday, except Federal holidays. The AD docket contains this AD, the regulatory evaluation, any comments received, and other information. The address for the Docket Office (phone: 800–647–5527) is Document Management Facility, U.S. Department of Transportation, Docket Operations, M–30, West Building Ground Floor, Room W12–140, 1200 New Jersey Avenue SE., Washington, DC 20590.

FOR FURTHER INFORMATION CONTACT: Martin Adler, Aerospace Engineer,

Engine & Propeller Directorate, FAA, 12 New England Executive Park, Burlington, MA 01803; phone: 781–238–7157; fax: 781–238–7199; email: *martin.adler@faa.gov*.

SUPPLEMENTARY INFORMATION:

Discussion

We issued a notice of proposed rulemaking (NPRM) to amend 14 CFR part 39 to include an AD that would apply to the specified products. That NPRM published in the **Federal Register** on February 7, 2013 (78 FR 9003). That NPRM proposed to require initial and repetitive borescope inspections of the HPC stage 6 disk baffle plate feature and removal from service of any HPC stage 6 disk, part number (P/N) 382–100–505–0, before further flight if the feature is missing any material. That NPRM also proposed to require mandatory removal from service of these HPC stage 6 disks at the next HPC module exposure, but no later than accumulating 6,800 cycles-since-new on the disk.

Comments

We gave the public the opportunity to participate in developing this AD. The following presents the comments received on the proposal and the FAA's response to each comment.

Request To Allow Continue-In-Service Limits for the Baffle Plate Feature

Engine Alliance and Korean Airlines requested that we allow continue-in-service limits for the baffle plate feature. Engine Alliance stated that they have performed extensive analysis showing that the risk in doing so, is minimal. Both commenters point out the potential inconveniences to the flying public, and the potential economical and logistical impacts on air carriers.

We agree. We changed paragraph (f)(4) of the AD to state to remove the HPC stage 6 disk within 50 additional cycles-in-service, if the baffle plate feature is found cracked or missing material.

Request To Remove References to Damage Causing Cracks to the HPC 7–9 Spool

Engine Alliance requested that we remove the reference to damage causing cracks to the HPC 7–9 spool, in the Discussion paragraph of the NPRM (78 FR 9003, February 7, 2013). Engine Alliance stated that there has been no cracking of the spools related to the baffle plate feature problem, to-date, but there is potential for cracking, and they suggested that we state there is potential for cracking.

We partially agree. We agree that there has been no cracking yet. We do not agree with stating there is potential for cracking, because we wouldn't be issuing an AD if cracking couldn't happen. We did not change the AD.

Request To Include Engine Alliance Service Bulletins (SBs)

Engine Alliance and Korean Airlines requested that we include Engine Alliance SBs No.s EAGP7–72–237 and EAGP7–72–240 as terminating action for this AD. The SBs introduce the new design of the HPC stage 6 disk either by repair or a new part, which eliminates the unsafe condition.

We partially agree. We agree that a repaired HPC stage 6 disk should be allowed to be installed as a terminating action for the AD, as well as installing the new P/N HPC stage 6 disk. We changed paragraph (g) in the AD from ''At next HPC module exposure, but not to exceed 6,800 CSN on the HPC stage 6 disk, remove the HPC stage 6 disk, P/N 382–100–505–0, from service'' to allow use of the repaired part. Paragraph (g) of this AD now reads: ''At next HPC module exposure, but not to exceed 6,800 CSN on the HPC stage 6 disk, remove the HPC stage 6 disk, P/N 382–100–505–0, from the engine.'' We do not agree with stipulating the SBs as terminating actions because we do not want to prevent future configurations from being terminating action. However, we listed those SBs under Related Information in the AD.

Request To Define When Undamaged Part Replacement Is Required

Engine Alliance requested that we define when undamaged part replacement is required, from module level to rotor assembly exposure. They stated that disk removal involves a full teardown of the compressor module, which can only be performed at specialized repair facilities. There is maintenance that can be performed at other facilities not qualified for a full teardown, which could involve removal and installation of a complete compressor module.

We agree. We changed paragraph (i) in the AD from: ''For the purpose of this AD, HPC module exposure is defined as separation of the flanges between the compressor case and the combustion diffuser case'' to: ''For the purpose of this AD, HPC module exposure is defined as disassembly of the compressor to where the HPC rotor assembly is removed and accessible.''

Conclusion

We reviewed the relevant data, considered the comments received, and determined that air safety and the public interest require adopting the AD with the changes described previously. We have determined that these minor changes:

- Are consistent with the intent that was proposed in the NPRM (78 FR 9003, February 7, 2013) for correcting the unsafe condition; and
- Do not add any additional burden upon the public than was already proposed in the NPRM (78 FR 9003, February 7, 2013).

We also determined that these changes will not increase the economic burden on any operator or increase the scope of the AD.

Costs of Compliance

We estimate that this AD will affect no engines installed on airplanes of U.S. registry, and the cost to U.S. operators to be $0.

Authority for This Rulemaking

Title 49 of the United States Code specifies the FAA's authority to issue rules on aviation safety. Subtitle I, section 106, describes the authority of the FAA Administrator. Subtitle VII: Aviation Programs, describes in more detail the scope of the Agency's authority.

We are issuing this rulemaking under the authority described in Subtitle VII, Part A, Subpart III, Section 44701: ''General requirements.'' Under that section, Congress charges the FAA with promoting safe flight of civil aircraft in air commerce by prescribing regulations for practices, methods, and procedures the Administrator finds necessary for safety in air commerce. This regulation is within the scope of that authority because it addresses an unsafe condition that is likely to exist or develop on products identified in this rulemaking action.

Regulatory Findings

This AD will not have federalism implications under Executive Order 13132. This AD will not have a substantial direct effect on the States, on the relationship between the national government and the States, or on the distribution of power and responsibilities among the various levels of government.

For the reasons discussed above, I certify that this AD:

(1) Is not a ''significant regulatory action'' under Executive Order 12866,

(2) Is not a ''significant rule'' under DOT Regulatory Policies and Procedures (44 FR 11034, February 26, 1979),

(3) Will not affect intrastate aviation in Alaska to the extent that it justifies making a regulatory distinction, and

(4) Will not have a significant economic impact, positive or negative, on a substantial number of small entities under the criteria of the Regulatory Flexibility Act.

List of Subjects in 14 CFR Part 39

Air transportation, Aircraft, Aviation safety, Incorporation by reference, Safety.

Adoption of the Amendment

Accordingly, under the authority delegated to me by the Administrator, the FAA amends 14 CFR part 39 as follows:

PART 39—AIRWORTHINESS DIRECTIVES

■ 1. The authority citation for part 39 continues to read as follows:

Authority: 49 U.S.C. 106(g), 40113, 44701.

§ 39.13 [Amended]

■ 2. The FAA amends § 39.13 by adding the following new airworthiness directive (AD):

2013–12–02 Engine Alliance: Amendment 39–17479; Docket No. FAA–2012–1329; Directorate Identifier 2012–NE–46–AD.

(a) Effective Date

This AD is effective July 19, 2013.

(b) Affected ADs

None.

(c) Applicability

This AD applies to Engine Alliance GP7270 and GP7277 turbofan engines with a high-pressure compressor (HPC) stage 6 disk, part number (P/N) 382–100–505–0, installed.

(d) Unsafe Condition

This AD was prompted by damage to the HPC stage 7–9 spool caused by failure of the baffle plate feature on affected HPC stage 6 disks. We are issuing this AD to prevent failure of the HPC stage 7–9 spool, uncontained engine failure, and damage to the airplane.

(e) Compliance

Comply with this AD within the compliance times specified, unless already done.

(f) Borescope Inspections

(1) For HPC stage 6 disks with fewer than 1,000 cycles- since- new (CSN) on the effective date of this AD, initially borescope inspect the baffle plate feature on the disk (360 degrees) before accumulating 1,500 CSN.

(2) For HPC stage 6 disks with 1,000 CSN or more on the effective date of this AD, initially borescope inspect the baffle plate feature on the disk (360 degrees) within the next 500 cycles-in-service (CIS).

(3) Thereafter, repetitively borescope inspect the baffle plate feature on the disk (360 degrees) within every 500 CIS.

(4) Remove the HPC stage 6 disk within 50 additional CIS, if the baffle plate feature is found cracked or missing material.

(g) Mandatory Removal From Service of Affected HPC Stage 6 Disks

At next HPC module exposure, but not to exceed 6,800 CSN on the HPC stage 6 disk, remove the HPC stage 6 disk, P/N 382–100–505–0, from the engine.

(h) Installation Prohibition

After the effective date of this AD, do not install any HPC stage 6 disk, P/N 382–100–505–0, into any HPC module.

(i) Definition

For the purpose of this AD, HPC module exposure is defined as disassembly of the compressor to where the HPC rotor assembly is removed and accessible.

(j) Alternative Methods of Compliance (AMOCs)

The Manager, Engine Certification Office, may approve AMOCs for this AD. Use the procedures found in 14 CFR 39.19 to make your request.

(k) Related Information

(1) For more information about this AD, contact Martin Adler, Aerospace Engineer, Engine & Propeller Directorate, FAA, 12 New England Executive Park, Burlington, MA 01803; phone: 781–238–7157; fax: 781–238–7199; email: *martin.adler@faa.gov*.

(2) Engine Alliance Service Bulletin Nos. EAGP7–72–236, EAGP7–72–237, and EAGP7–72–240, pertain to the subject of this AD.

(3) For service information identified in this AD, contact Engine Alliance, 411 Silver Lane, East Hartford, CT 06118, phone: 800–565–0140; Web site: *https://www.enginealliance portal.com*. You may view this service information at the FAA, Engine & Propeller Directorate, 12 New England Executive Park, Burlington, MA. For information on the availability of this material at the FAA, call 781–238–7125.

(l) Material Incorporated by Reference

None.

Issued in Burlington, Massachusetts, on June 7, 2013.

Robert J. Ganley,

Acting Assistant Manager, Engine & Propeller Directorate, Aircraft Certification Service.

[FR Doc. 2013–14040 Filed 6–13–13; 8:45 am]

BILLING CODE 4910–13–P

DEPARTMENT OF TRANSPORTATION

Federal Aviation Administration

14 CFR Part 39

[Docket No. FAA–2012–1221; Directorate Identifier 2012–NM–151–AD; Amendment 39–17474; AD 2013–11–14]

RIN 2120–AA64

Airworthiness Directives; The Boeing Company Airplanes

AGENCY: Federal Aviation Administration (FAA), DOT.

ACTION: Final rule.

SUMMARY: We are adopting a new airworthiness directive (AD) for certain The Boeing Company Model 777–200 and –300 series airplanes. This AD was prompted by reports of hydraulic fluid contamination (including contamination caused by hydraulic fluid in its liquid, vapor, and/or solid (coked) form) found in the strut forward dry bay. This AD requires repetitive general visual inspections of the strut forward dry bay for the presence of hydraulic fluid, and related investigative and corrective actions (including checking drain lines for blockage due to hydraulic fluid coking, and cleaning or replacing drain lines to allow drainage) if necessary. We are issuing this AD to detect and correct hydraulic fluid contamination of the strut forward dry bay, which could result in hydrogen embrittlement of the titanium forward engine mount bulkhead fittings, and consequent inability of the fittings to carry engine loads, resulting in engine separation. Hydraulic embrittlement also could cause a through-crack formation across the fittings through which an engine fire could breach into the strut, resulting in an uncontained strut fire.

DATES: This AD is effective July 19, 2013.

The Director of the Federal Register approved the incorporation by reference of a certain publication listed in the AD as of July 19, 2013.

ADDRESSES: For service information identified in this AD, contact Boeing Commercial Airplanes, Attention: Data & Services Management, P. O. Box 3707, MC 2H–65, Seattle, WA 98124–2207; telephone 206–544–5000, extension 1; fax 206–766–5680; Internet *https://www.myboeingfleet.com*. You may review copies of the referenced service information at the FAA, Transport Airplane Directorate, 1601 Lind Avenue SW., Renton, WA. For information on the availability of this material at the FAA, call 425–227–1221.

Examining the AD Docket

You may examine the AD docket on the Internet at *http://www.regulations.gov*; or in person at the Docket Management Facility between 9 a.m. and 5 p.m., Monday through Friday, except Federal holidays. The AD docket contains this AD, the regulatory evaluation, any comments received, and other information. The address for the Docket Office (phone: 800–647–5527) is Document Management Facility, U.S. Department of Transportation, Docket Operations, M–30, West Building Ground Floor, Room W12–140, 1200 New Jersey Avenue SE., Washington, DC 20590.

FOR FURTHER INFORMATION CONTACT: Kevin Nguyen, Aerospace Engineer, Propulsion Branch, ANM–140S, FAA, Seattle Aircraft Certification Office, 1601 Lind Avenue SW., Renton, WA 98057–3356; phone: 425–917–6501; fax: 425–917–6590; email: *kevin.nguyen@faa.gov*.

SUPPLEMENTARY INFORMATION:

Discussion

We issued a notice of proposed rulemaking (NPRM) to amend 14 CFR part 39 to include an AD that would apply to the specified products. That NPRM published in the **Federal Register** on December 4, 2012 (77 FR 71731). That NPRM proposed to require repetitive general visual inspections of the strut forward dry bay for the presence of hydraulic fluid, and related investigative and corrective actions if necessary.

Comments

We gave the public the opportunity to participate in developing this AD. The following presents the comments received on the proposal (77 FR 71731, December 4, 2012) and the FAA's response to each comment.

Concurrence With NPRM (77 FR 71731, December 4, 2012)

Boeing concurred with the content of the NPRM (77 FR 71731, December 4, 2012).

Request for Delegation of Repair Method Approval to Organization Designation Authorization (ODA)

All Nippon Airways Co., Ltd., (ANA) requested that we delegate the approval for a repair method to the Boeing ODA in order to minimize the downtime of the airplane. ANA noted that paragraph (h)(2) of the NPRM (77 FR 71731, December 4, 2012) requires repair in accordance with a method approved by the Seattle Aircraft Certification Office, while the service information states to contact Boeing for repairs.

We agree that approval of the repairs can be delegated to the Boeing ODA for this AD. As stated in the NPRM (77 FR 71731, December 4, 2012), paragraph (i)(3) of the NPRM already specifies that an alternative method of compliance (AMOC) may be used for any repair required by this AD if it is approved by the Boeing Commercial Airplanes ODA that has been authorized by the Manager, Seattle Aircraft Certification Office, to make those findings. However, we have revised paragraph (h)(2) of this AD to reference paragraph (i) of this AD for repair approvals.

Request for Information

Mark Sokolow requested that we provide information on which airplanes the hydraulic fluid contamination occurred, and on which flights. The commenter quoted an Open Government Directive issued by the Office of Management and Budget on December 8, 2009, (*http://www.whitehouse.gov/sites/default/files/omb/assets/memoranda_2010/m10-06.pdf*), which presented a 60-day timetable to ''respect the presumption of openness by publishing information online.'' The author of that directive reminded agencies that government has defined guidelines as to the objectivity of information, which focuses on whether the ''disseminated information is being presented in an accurate, clear, complete and unbiased manner. This involves whether the information is being presented within a proper context. (Guidelines, 2001, p. 8459).''

We infer that the commenter is requesting information regarding specific airplanes that originally exhibited the unsafe condition. Boeing Special Attention Service Bulletin 777–54–0028, dated May 25, 2012, which is referenced in the NPRM (77 FR 71731, December 4, 2012), identifies Model 777 airplanes that have accumulated approximately 9,900 to 29,000 flight cycles and 13,000 to 33,300 flight hours, as the affected airplanes. However, individual operator data might be considered proprietary; therefore, we do not publish individual operator information of this type in ADs. No change has been made to this AD in this regard.

Request for Identification of Repairs

Mark Sokolow also requested that we delineate mechanical repairs that can be completed to stop the hydraulic fluid contamination.

We note that, at this time, a terminating action is not available. The manufacturer is currently working on a terminating action; however, the required inspections and any necessary cleaning or drain line replacement adequately addresses the unsafe condition. If a terminating action becomes available, we might consider further rulemaking at that time. No change has been made to the AD in this regard.

Clarification of Terminology

We have determined that an explanation of hydraulic fluid contamination is needed for clarification purposes in this AD. Hydraulic fluid contamination includes, but is not limited to, contamination caused by hydraulic fluid in its liquid, vapor, and/or solid (coked) form. Hydraulic fluid in any of these forms can be a contaminant to the structure and its coating (primer, paint, leveling compound, sealant, etc.) in the strut forward dry bay. Boeing has confirmed that ''hydraulic fluid contamination'' used in the service information is understood to be contamination caused by hydraulic fluid in its liquid, vapor, and/or solid (coked) form. We have added this clarification to the Summary section of the AD preamble and to paragraphs (e) and (g) of this AD.

Clarification of Related Investigative and Corrective Actions

We have included the parenthetical phrase, ''including checking drain lines for blockage due to hydraulic fluid coking, and cleaning or replacing drain lines to allow drainage'' to clarify the related investigative and corrective actions specified in paragraph (g) of this AD. Hydraulic fluid can enter the dry bay through the condensate drain line which connects to the system disconnect box drain lines. The system disconnect box drain hose can clog due to hydraulic fluid coking in the drain lines, which allows hydraulic fluid to back up into the strut forward dry bay through the condensate drain line. Although the NPRM (77 FR 71731, December 4, 2012) describes these actions, we want to emphasize the importance of these actions by including them in the final rule.

Correction to Paragraph (c) of This AD

We have corrected the series designation of the engine to Pratt & Whitney ''PW4000'' series engines in paragraph (c) of this AD.

Conclusion

We reviewed the relevant data, considered the comments received, and determined that air safety and the public interest require adopting the AD with the changes described previously

and minor editorial changes. We have determined that these minor changes:

- Are consistent with the intent that was proposed in the NPRM (77 FR 71731, December 4, 2012) for correcting the unsafe condition; and
- Do not add any additional burden upon the public than was already proposed in the NPRM (77 FR 71731, December 4, 2012).

We also determined that these changes will not increase the economic burden on any operator or increase the scope of the AD.

Costs of Compliance

We estimate that this AD affects 55 airplanes of U.S. registry.

We estimate the following costs to comply with this AD:

ESTIMATED COSTS

Action	Labor cost	Parts cost	Cost per product	Cost on U.S. operators
Repetitive general visual inspections.	5 work-hours × $85 per hour = $425 per inspection cycle.	$0	$425 per inspection cycle	$23,375 per inspection cycle.

We estimate the following costs to do any actions that would be required based on the results of the inspection. We have no way of determining the number of aircraft that might need these actions.

ON-CONDITION COSTS

Action	Labor cost	Parts cost	Cost per product
Detailed inspection	8 work-hours × $85 per hour = $680	$0	$680
Check drain lines (including cleaning or replacing)	5 work-hours × $85 per hour = $425	0	425
Detailed inspection and high frequency eddy current inspection.	8 work-hours × $85 per hour = $680	0	680
Clean and restore sealant, primer and leveling compound.	8 work-hours × $85 per hour = $680	0	680

We have received no definitive data that would enable us to provide a cost estimate for the on-condition repair specified in this AD.

According to the manufacturer, some of the costs of this AD may be covered under warranty, thereby reducing the cost impact on affected individuals. We do not control warranty coverage for affected individuals. As a result, we have included all costs in our cost estimate.

Authority for This Rulemaking

Title 49 of the United States Code specifies the FAA's authority to issue rules on aviation safety. Subtitle I, section 106, describes the authority of the FAA Administrator. Subtitle VII: Aviation Programs, describes in more detail the scope of the Agency's authority.

We are issuing this rulemaking under the authority described in Subtitle VII, Part A, Subpart III, Section 44701: ''General requirements.'' Under that section, Congress charges the FAA with promoting safe flight of civil aircraft in air commerce by prescribing regulations for practices, methods, and procedures the Administrator finds necessary for safety in air commerce. This regulation is within the scope of that authority because it addresses an unsafe condition that is likely to exist or develop on products identified in this rulemaking action.

Regulatory Findings

This AD will not have federalism implications under Executive Order 13132. This AD will not have a substantial direct effect on the States, on the relationship between the national government and the States, or on the distribution of power and responsibilities among the various levels of government.

For the reasons discussed above, I certify that this AD:

(1) Is not a ''significant regulatory action'' under Executive Order 12866,

(2) Is not a ''significant rule'' under DOT Regulatory Policies and Procedures (44 FR 11034, February 26, 1979),

(3) Will not affect intrastate aviation in Alaska, and

(4) Will not have a significant economic impact, positive or negative, on a substantial number of small entities under the criteria of the Regulatory Flexibility Act.

List of Subjects in 14 CFR Part 39

Air transportation, Aircraft, Aviation safety, Incorporation by reference, Safety.

Adoption of the Amendment

Accordingly, under the authority delegated to me by the Administrator, the FAA amends 14 CFR part 39 as follows:

PART 39—AIRWORTHINESS DIRECTIVES

■ 1. The authority citation for part 39 continues to read as follows:

Authority: 49 U.S.C. 106(g), 40113, 44701.

§ 39.13 [Amended]

■ 2. The FAA amends § 39.13 by adding the following new airworthiness directive (AD):

2013–11–14 The Boeing Company: Amendment 39–17474; Docket No. FAA–2012–1221; Directorate Identifier 2012–NM–151–AD.

(a) Effective Date

This AD is effective July 19, 2013.

(b) Affected ADs

None.

(c) Applicability

This AD applies to The Boeing Company Model 777–200 and –300 series airplanes; certificated in any category; equipped with Pratt & Whitney PW4000 series engines; as identified in Boeing Special Attention Service Bulletin 777–54–0028, dated May 25, 2012.

(d) Subject

Joint Aircraft System Component (JASC)/ Air Transport Association (ATA) of America Code 54, Nacelles/pylons.

(e) Unsafe Condition

This AD was prompted by reports of hydraulic fluid contamination (including contamination caused by hydraulic fluid in its liquid, vapor, and/or solid (coked) form) found in the strut forward dry bay. We are issuing this AD to detect and correct hydraulic fluid contamination of the strut forward dry bay, which could result in hydrogen embrittlement of the titanium forward engine mount bulkhead fittings, and consequent inability of the fittings to carry engine loads, resulting in engine loss. Hydraulic embrittlement also could cause a through-crack formation across the fittings through which an engine fire could breach into the strut, resulting in an uncontained strut fire.

(f) Compliance

Comply with this AD within the compliance times specified, unless already done.

(g) Inspection

Except as provided by paragraph (h)(1) of this AD, at the times specified in paragraph 1.E., ''Compliance,'' of Boeing Special Attention Service Bulletin 777–54–0028, dated May 25, 2012: Do a general visual inspection for hydraulic fluid contamination (including contamination caused by hydraulic fluid in its liquid, vapor, and/or solid (coked) form) of the interior of the strut forward dry bay, and do all applicable related investigative and corrective actions (including checking drain lines for blockage due to hydraulic fluid coking, and cleaning or replacing drain lines to allow drainage) if necessary, in accordance with the Accomplishment Instructions of Boeing Special Attention Service Bulletin 777–54–0028, dated May 25, 2012, except as required by paragraph (h)(2) of this AD. Repeat the inspection thereafter at the times specified in paragraph 1.E., ''Compliance,'' of Boeing Special Attention Service Bulletin 777–54–0028, dated May 25, 2012. Except as required by paragraph (h)(3) of this AD, do all applicable related investigative and corrective actions at the times specified in paragraph 1.E., ''Compliance,'' of Boeing Special Attention Service Bulletin 777–54–0028, dated May 25, 2012.

(h) Exceptions to the Service Information

(1) Where the Compliance time column of paragraph 1.E., ''Compliance,'' of Boeing Service Bulletin 777–54–0028, dated May 25, 2012, refers to the compliance time ''after the original issue date of this service bulletin,'' this AD requires compliance within the specified compliance time after the effective date of this AD.

(2) Where Boeing Special Attention Service Bulletin 777–54–0028, dated May 25, 2012, specifies to contact Boeing for repair: Except as required by paragraph (h)(3) of this AD, at the applicable times specified in paragraph 1.E., ''Compliance,'' of Boeing Special Attention Service Bulletin 777–54–0028, dated May 25, 2012, repair, using a method approved in accordance with the procedures specified in paragraph (i) of this AD.

(3) Where paragraph 1.E., ''Compliance,'' of Boeing Special Attention Service Bulletin 777–54–0028, dated May 25, 2012, specifies a compliance time of ''within 25 flight-cycles or 10 days, whichever occurs first,'' this AD requires compliance within 25 flight cycles or 10 days after the most recent inspection required by paragraph (g) of this AD, whichever occurs first.

(i) Alternative Methods of Compliance (AMOCs)

(1) The Manager, Seattle Aircraft Certification Office (ACO), FAA, has the authority to approve AMOCs for this AD, if requested using the procedures found in 14 CFR 39.19. In accordance with 14 CFR 39.19, send your request to your principal inspector or local Flight Standards District Office, as appropriate. If sending information directly to the manager of the ACO, send it to the attention of the person identified in the Related Information section of this AD. Information may be emailed to: *9-ANM-Seattle-ACO-AMOC-Requests@faa.gov.*

(2) Before using any approved AMOC, notify your appropriate principal inspector, or lacking a principal inspector, the manager of the local flight standards district office/certificate holding district office.

(3) An AMOC that provides an acceptable level of safety may be used for any repair required by this AD if it is approved by the Boeing Commercial Airplanes Organization Designation Authorization (ODA) that has been authorized by the Manager, Seattle ACO, to make those findings. For a repair method to be approved, the repair must meet the certification basis of the airplane, and the approval must specifically refer to this AD.

(j) Related Information

For more information about this AD, contact Kevin Nguyen, Aerospace Engineer, Propulsion Branch, ANM–140S, FAA, Seattle Aircraft Certification Office, 1601 Lind Avenue SW., Renton, WA 98057–3356; phone: 425–917–6501; fax: 425–917–6590; email: *kevin.nguyen@faa.gov.*

(k) Material Incorporated by Reference

(1) The Director of the Federal Register approved the incorporation by reference (IBR) of the service information listed in this paragraph under 5 U.S.C. 552(a) and 1 CFR part 51.

(2) You must use this service information as applicable to do the actions required by this AD, unless the AD specifies otherwise.

(i) Boeing Special Attention Service Bulletin 777–54–0028, dated May 25, 2012.

(ii) Reserved.

(3) For service information identified in this AD, contact Boeing Commercial Airplanes, Attention: Data & Services Management, P. O. Box 3707, MC 2H–65, Seattle, WA 98124–2207; telephone 206–544–5000, extension 1; fax 206–766–5680; Internet *https://www.myboeingfleet.com.*

(4) You may view this service information at FAA, Transport Airplane Directorate, 1601 Lind Avenue SW., Renton, WA. For information on the availability of this material at the FAA, call 425–227–1221.

(5) You may view this service information that is incorporated by reference at the National Archives and Records Administration (NARA). For information on the availability of this material at NARA, call 202–741–6030, or go to: *http://www.archives.gov/federal-register/cfr/ibr-locations.html.*

Issued in Renton, Washington, on May 24, 2013.

Jeffrey E. Duven,

Acting Manager, Transport Airplane Directorate, Aircraft Certification Service.

[FR Doc. 2013–13294 Filed 6–13–13; 8:45 am]

BILLING CODE 4910–13–P

DEPARTMENT OF TRANSPORTATION

Federal Aviation Administration

14 CFR Part 39

[Docket No. FAA–2013–0458; Directorate Identifier 2013–NE–19–AD; Amendment 39–17480; AD 2013–12–03]

RIN 2120–AA64

Airworthiness Directives; Rolls-Royce Deutschland Ltd & Co KG Turbofan Engines

AGENCY: Federal Aviation Administration (FAA), DOT.

ACTION: Final rule; request for comments.

SUMMARY: We are adopting a new airworthiness directive (AD) for all Rolls-Royce Deutschland Ltd & Co KG (RRD) BR700–725A1–12 turbofan engines with fuel pump tube part number FW64852 installed. This AD requires removal of the affected fuel pump tube and its replacement with a part eligible for installation. This AD was prompted by the discovery that cracks have occurred in the affected fuel pump tube between the fuel metering unit and the main fuel pump. We are issuing this AD to prevent loss of fuel supply to the engine, which could result in in-flight engine shutdown of one or more engines, loss of thrust control and damage to the airplane.

DATES: This AD becomes effective June 14, 2013.

We must receive comments on this AD by July 29, 2013.

ADDRESSES: You may send comments by any of the following methods:

- *Federal eRulemaking Portal:* Go to *http://www.regulations.gov* and follow the instructions for sending your comments electronically.
- *Mail:* U.S. Department of Transportation, 1200 New Jersey Avenue SE., West Building Ground Floor, Room W12–140, Washington, DC 20590–0001.
- *Hand Delivery:* Deliver to Mail address above between 9 a.m. and 5 p.m., Monday through Friday, except Federal holidays.

• *Fax:* 202–493–2251.

For service information identified in this AD, contact, contact Rolls-Royce Deutschland Ltd & Co KG, Eschenweg 11, Dahlewitz, 15827 Blankenfelde-Mahlow, Germany; phone: 49 0 33–7086–1883; fax: 49 0 33–7086–3276. You may view this service information at the FAA, Engine & Propeller Directorate, 12 New England Executive Park, Burlington, MA 01803. For information on the availability of this material at the FAA, call 781–238–7125.

Examining the AD Docket

You may examine the AD docket on the Internet at *http://www.regulations.gov;* or in person at the Docket Operations office between 9 a.m. and 5 p.m., Monday through Friday, except Federal holidays. The AD docket contains this AD, the regulatory evaluation, any comments received, and other information. The street address for the Docket Operations office (phone: 800–647–5527) is the same as the Mail address provided in the **ADDRESSES** section. Comments will be available in the AD docket shortly after receipt.

FOR FURTHER INFORMATION CONTACT: Frederick Zink, Aerospace Engineer, Engine Certification Office, FAA, Engine & Propeller Directorate, 12 New England Executive Park, Burlington, MA 01803; phone: 781–238–7779; fax: 781–238–7199; email: *frederick.zink@faa.gov.*

SUPPLEMENTARY INFORMATION:

Discussion

The European Aviation Safety Agency (EASA), which is the Technical Agent for the Member States of the European Community, has issued EASA Airworthiness Directive 2013–0110, dated May 24, 2013, a Mandatory Continuing Airworthiness Information (referred to after this as ''the MCAI''), to correct an unsafe condition for the specified products. The MCAI states:

> Cracks have occurred in the Spill Return to Fuel Pump Tube between the Fuel Metering Unit (FMU) and the main fuel pump. This resulted in fuel leaks. This condition, if not corrected, could lead to loss of engine fuel supply, likely resulting in uncommanded in-flight shut down and consequent reduced control of the aeroplane.

We are issuing this AD to prevent loss of fuel supply to the engine, which could result in in-flight engine shutdown of one or more engines, loss of thrust control and damage to the airplane. You may obtain further information by examining the MCAI in the AD docket.

Relevant Service Information

RRD has issued Service Bulletin SB–BR700–73–101847, dated May 17, 2013. The actions described in this service information are intended to correct the unsafe condition identified in the MCAI.

FAA's Determination and Requirements of This AD

This product has been approved by the aviation authority of Germany, and is approved for operation in the United States. Pursuant to our bilateral agreement with the European Community, EASA has notified us of the unsafe condition described in the MCAI and service information referenced above. We are issuing this AD because we evaluated all information provided by EASA and determined the unsafe condition exists and is likely to exist or develop on other products of the same type design. This AD requires removal of affected fuel pump tube and its replacement with a part eligible for installation.

FAA's Determination of the Effective Date

An unsafe condition exists that requires the immediate adoption of this AD. The FAA has found that the risk to the flying public justifies waiving notice and comment prior to adoption of this rule because of the short compliance time requirement. Therefore, we find that notice and opportunity for public comment before issuing this AD are impracticable and that good cause exists for making this amendment effective in fewer than 30 days.

Comments Invited

This AD is a final rule that involves requirements affecting flight safety, and we did not precede it by notice and opportunity for public comment. We invite you to send any written relevant data, views, or arguments about this AD. Send your comments to an address listed under the **ADDRESSES** section. Include ''Docket No. FAA–2013–0458; Directorate Identifier 2013–NE–19–AD'' at the beginning of your comments. We specifically invite comments on the overall regulatory, economic, environmental, and energy aspects of this AD. We will consider all comments received by the closing date and may amend this AD because of those comments.

We will post all comments we receive, without change, to *http://www.regulations.gov,* including any personal information you provide. We will also post a report summarizing each substantive verbal contact with FAA personnel concerning this AD. Using the search function of the Web site, anyone can find and read the comments in any of our dockets, including, if provided, the name of the individual who sent the comment (or signed the comment on behalf of an association, business, labor union, etc.). You may review the DOT's complete Privacy Act Statement in the **Federal Register** published on April 11, 2000 (65 FR 19477–78).

Authority for This Rulemaking

Title 49 of the United States Code specifies the FAA's authority to issue rules on aviation safety. Subtitle I, section 106, describes the authority of the FAA Administrator. ''Subtitle VII: Aviation Programs,'' describes in more detail the scope of the Agency's authority.

We are issuing this rulemaking under the authority described in ''Subtitle VII, Part A, Subpart III, Section 44701: General requirements.'' Under that section, Congress charges the FAA with promoting safe flight of civil aircraft in air commerce by prescribing regulations for practices, methods, and procedures the Administrator finds necessary for safety in air commerce. This regulation is within the scope of that authority because it addresses an unsafe condition that is likely to exist or develop on products identified in this rulemaking action.

Regulatory Findings

We determined that this AD will not have federalism implications under Executive Order 13132. This AD will not have a substantial direct effect on the States, on the relationship between the national government and the States, or on the distribution of power and responsibilities among the various levels of government.

For the reasons discussed above, I certify this AD:

(1) Is not a ''significant regulatory action'' under Executive Order 12866;

(2) Is not a ''significant rule'' under the DOT Regulatory Policies and Procedures (44 FR 11034, February 26, 1979); and

(3) Will not affect intrastate aviation in Alaska to the extent that it justifies making a regulatory distinction, and

(4) Will not have a significant economic impact, positive or negative, on a substantial number of small entities under the criteria of the Regulatory Flexibility Act.

We prepared a regulatory evaluation of the estimated costs to comply with this proposed AD and placed it in the AD docket.

List of Subjects in 14 CFR Part 39

Air transportation, Aircraft, Aviation safety, Incorporation by reference, Safety.

Adoption of the Amendment

Accordingly, under the authority delegated to me by the Administrator, the FAA amends 14 CFR part 39 as follows:

PART 39—AIRWORTHINESS DIRECTIVES

■ 1. The authority citation for part 39 continues to read as follows:

Authority: 49 U.S.C. 106(g), 40113, 44701.

§ 39.13 [Amended]

■ 2. The FAA amends § 39.13 by adding the following new AD:

2013–12–03 Rolls-Royce Deutschland Ltd & Co KG (Formerly Rolls-Royce Deutschland GmbH, formerly BMW Rolls-Royce GmbH): Amendment 39–17480; Docket No. FAA–2013–0458; Directorate Identifier 2013–NE–19–AD.

(a) Effective Date

This airworthiness directive (AD) becomes effective June 14, 2013.

(b) Affected ADs

None.

(c) Applicability

This AD applies to all Rolls-Royce Deutschland Ltd & Co KG (RRD) BR700–725A1–12 turbofan engines with fuel pump tube part number (P/N) FW64852 installed.

(d) Reason

This AD was prompted by the discovery that cracks have occurred in the affected fuel pump tube between the fuel metering unit and the main fuel pump. We are issuing this AD to prevent loss of fuel supply to the engine, which could result in in-flight engine shutdown of one or more engines, loss of thrust control and damage to the airplane.

(e) Actions and Compliance

Unless already done, within 15 days after the effective date of the AD, remove fuel pump tube P/N FW64852 and replace with a part eligible for installation. Guidance on removing the affected fuel pump tube can be found in RRD Service Bulletin SB–BR700–73–101847, dated May 17, 2013.

(f) Installation Prohibition

After the effective date of this AD, do not install fuel pump tube P/N FW64852 onto any engine or install an engine with fuel pump tube P/N FW64852 onto any aircraft.

(g) Alternative Methods of Compliance (AMOCs)

The Manager, Engine Certification Office, FAA, may approve AMOCs to this AD. Use the procedures found in 14 CFR 39.19 to make your request.

(h) Related Information

(1) For more information about this AD, contact, contact Frederick Zink, Aerospace Engineer, Engine Certification Office, FAA, Engine & Propeller Directorate, 12 New England Executive Park, Burlington, MA 01803; phone: 781–238–7779; fax: 781–238–7199; email: *frederick.zink@faa.gov*.

(2) Refer to European Aviation Safety Agency AD 2013–0110, dated May 24, 2013, and Rolls-Royce Deutschland Ltd & Co KG Service Bulletin No. SB–BR700–73–101847, dated May 17, 2013, for related information.

(3) For service information identified in this AD, contact Rolls-Royce Deutschland Ltd & Co KG, Eschenweg 11, Dahlewitz, 15827 Blankenfelde-Mahlow, Germany; phone: 49 0 33–7086–1883; fax: 49 0 33–7086–3276.

(4) You may view this service information at the FAA, Engine & Propeller Directorate, 12 New England Executive Park, Burlington, MA. For information on the availability of this material at the FAA, call 781–238–7125.

(i) Material Incorporated by Reference

None.

Issued in Burlington, Massachusetts, on June 10, 2013.

Colleen M. D'Alessandro,

Assistant Manager, Engine & Propeller Directorate, Aircraft Certification Service.

[FR Doc. 2013–14035 Filed 6–13–13; 8:45 am]

BILLING CODE 4910–13–P

PENSION BENEFIT GUARANTY CORPORATION

29 CFR Parts 4022 and 4044

Allocation of Assets in Single-Employer Plans; Benefits Payable in Terminated Single-Employer Plans; Interest Assumptions for Valuing and Paying Benefits

AGENCY: Pension Benefit Guaranty Corporation.

ACTION: Final rule.

SUMMARY: This final rule amends the Pension Benefit Guaranty Corporation's regulations on Benefits Payable in Terminated Single-Employer Plans and Allocation of Assets in Single-Employer Plans to prescribe interest assumptions under the benefit payments regulation for valuation dates in July 2013 and interest assumptions under the asset allocation regulation for valuation dates in the third quarter of 2013. The interest assumptions are used for valuing and paying benefits under terminating single-employer plans covered by the pension insurance system administered by PBGC.

DATES: Effective July 1, 2013.

FOR FURTHER INFORMATION CONTACT: Catherine B. Klion (*Klion.Catherine@PBGC.gov*), Assistant General Counsel for Regulatory Affairs, Pension Benefit Guaranty Corporation, 1200 K Street NW., Washington, DC 20005, 202–326–4024. (TTY/TDD users may call the Federal relay service toll free at 1–800–877–8339 and ask to be connected to 202–326–4024.)

SUPPLEMENTARY INFORMATION: PBGC's regulations on Allocation of Assets in Single-Employer Plans (29 CFR Part 4044) and Benefits Payable in Terminated Single-Employer Plans (29 CFR Part 4022) prescribe actuarial assumptions—including interest assumptions—for valuing and paying plan benefits under terminating single-employer plans covered by title IV of the Employee Retirement Income Security Act of 1974. The interest assumptions in the regulations are also published on PBGC's Web site (*http://www.pbgc.gov*).

The interest assumptions in Appendix B to Part 4044 are used to value benefits for allocation purposes under ERISA section 4044. PBGC uses the interest assumptions in Appendix B to Part 4022 to determine whether a benefit is payable as a lump sum and to determine the amount to pay. Appendix C to Part 4022 contains interest assumptions for private-sector pension practitioners to refer to if they wish to use lump-sum interest rates determined using PBGC's historical methodology. Currently, the rates in Appendices B and C of the benefit payment regulation are the same.

The interest assumptions are intended to reflect current conditions in the financial and annuity markets. Assumptions under the asset allocation regulation are updated quarterly; assumptions under the benefit payments regulation are updated monthly. This final rule updates the benefit payments interest assumptions for July 2013 and updates the asset allocation interest assumptions for the third quarter (July through September) of 2013.

The third quarter 2013 interest assumptions under the allocation regulation will be 2.60 percent for the first 20 years following the valuation date and 3.43 percent thereafter. In comparison with the interest assumptions in effect for the second quarter of 2013, these interest assumptions represent no change in the select period (the period during which the select rate (the initial rate) applies), an increase of 0.10 percent in the select rate, and an increase of 0.23 percent in the ultimate rate (the final rate).

The July 2013 interest assumptions under the benefit payments regulation will be 1.25 percent for the period during which a benefit is in pay status and 4.00 percent during any years preceding the benefit's placement in pay status. In comparison with the interest assumptions in effect for June 2013, these interest assumptions represent an increase of 0.50 percent in the immediate annuity rate and are otherwise unchanged.

PBGC has determined that notice and public comment on this amendment are impracticable and contrary to the public interest. This finding is based on the need to determine and issue new interest assumptions promptly so that the assumptions can reflect current market conditions as accurately as possible.

Because of the need to provide immediate guidance for the valuation and payment of benefits under plans with valuation dates during July 2013, PBGC finds that good cause exists for making the assumptions set forth in this amendment effective less than 30 days after publication.

PBGC has determined that this action is not a ''significant regulatory action'' under the criteria set forth in Executive Order 12866.

Because no general notice of proposed rulemaking is required for this amendment, the Regulatory Flexibility Act of 1980 does not apply. See 5 U.S.C. 601(2).

List of Subjects

29 CFR Part 4022

Employee benefit plans, Pension insurance, Pensions, Reporting and recordkeeping requirements.

29 CFR Part 4044

Employee benefit plans, Pension insurance, Pensions.

In consideration of the foregoing, 29 CFR parts 4022 and 4044 are amended as follows:

PART 4022—BENEFITS PAYABLE IN TERMINATED SINGLE-EMPLOYER PLANS

■ 1. The authority citation for part 4022 continues to read as follows:

Authority: 29 U.S.C. 1302, 1322, 1322b, 1341(c)(3)(D), and 1344.

■ 2. In appendix B to part 4022, Rate Set 237, as set forth below, is added to the table.

Appendix B to Part 4022—Lump Sum Interest Rates for PBGC Payments

* * * * *

Rate set	For plans with a valuation date		Immediate annuity rate (percent)	Deferred annuities (percent)				
	On or after	Before		i_1	i_2	i_3	n_1	n_2
*	*		*	*	*	*	*	
237	7–1–13	8–1–13	1.25	4.00	4.00	4.00	7	8

■ 3. In appendix C to part 4022, Rate Set 237, as set forth below, is added to the table.

Appendix C to Part 4022—Lump Sum Interest Rates for Private-Sector Payments

* * * * *

Rate set	For plans with a valuation date		Immediate annuity rate (percent)	Deferred annuities (percent)				
	On or after	Before		i_1	i_2	i_3	n_1	n_2
*	*		*	*	*	*	*	
237	7–1–13	8–1–13	1.25	4.00	4.00	4.00	7	8

PART 4044—ALLOCATION OF ASSETS IN SINGLE-EMPLOYER PLANS

■ 4. The authority citation for part 4044 continues to read as follows:

Authority: 29 U.S.C. 1301(a), 1302(b)(3), 1341, 1344, 1362.

■ 5. In appendix B to part 4044, a new entry for July–September 2013, as set forth below, is added to the table.

Appendix B to Part 4044—Interest Rates Used to Value Benefits

* * * * *

For valuation dates occurring in the month—	The values of i_t are:					
	i_t	for t =	i_t	for t =	i_t	for t =
*	*	*	*	*	*	
July–September 2013	0.0260	1–20	0.0343	>20	N/A	N/A

Issued in Washington, DC, on this 11th day of June 2013.

Leslie Kramerich,

Acting Chief Policy Officer, Pension Benefit Guaranty Corporation.

[FR Doc. 2013–14194 Filed 6–13–13; 8:45 am]

BILLING CODE 7709–01–P

DEPARTMENT OF HOMELAND SECURITY

Coast Guard

33 CFR Part 100

[Docket No. USCG–2013–0398]

Special Local Regulations; Recurring Marine Events in the Seventh Coast Guard District

AGENCY: Coast Guard, DHS.

ACTION: Notice of enforcement of regulations.

SUMMARY: The Coast Guard will enforce the Fourth of July Fireworks Display regulations on certain navigable waterways in Hilton Head Island, Mount Pleasant, and North Charleston, South Carolina, from approximately 8 p.m. through 11 p.m. on July 4, 2013. This action is necessary to ensure safety of life on navigable waters of the United States during the Fourth of July Fireworks Displays. During the enforcement period, and in accordance with previously issued special local regulations, vessels may not enter, transit through, anchor in, or remain within the designated area unless authorized by the Captain of the Port Charleston designated representatives.

DATES: The regulation in 33 CFR 100.701 Table 1 will be enforced from 8 p.m. until 11 p.m. July 4, 2013.

FOR FURTHER INFORMATION CONTACT: If you have questions on this rule, call or email CWO Christopher Ruleman, Sector Charleston Office of Waterways Management, Coast Guard; telephone 843–740–3184, email *christopher.l.ruleman@uscg.mil.*

SUPPLEMENTARY INFORMATION: The Coast Guard will enforce the special local regulations for the Fourth of July Fireworks Displays in 33 CFR 100.701 Table 1 from 8 p.m. through 11 p.m. on July 4, 2013. Specifically, this document serves as the notice of enforcement for the ''Patriots Point Fireworks'' in Mount Pleasant, the ''Skull Creek Fireworks'' in Hilton Head, and the ''City of North Charleston Fireworks'' in North Charleston listed in Table 1 to 33 CFR 100.701.

Under the provisions of 33 CFR 100.701, all persons and vessels are prohibited from entering the regulated areas unless permission to enter has been granted by the Captain of the Port Charleston. This notice of enforcement is to provide notice of regulated areas that will encompass portions of the navigable waterways. Spectator vessels may safely transit outside the regulated areas, but may not anchor, block, loiter in, or impede the transit of official patrol vessels. The Coast Guard may be assisted by other Federal, State, or local law enforcement agencies in enforcing these regulations.

This notice is issued under authority of 33 CFR 100.701 and 5 U.S.C. 552 (a). The Coast Guard will provide notice of the regulated areas by Local Notice to Mariners, Broadcast Notice to Mariners, and on-scene designated representatives. If the COTP Charleston determines that the regulated area need not be enforced for the full duration stated in this notice, he or she may use a Broadcast Notice to Mariners to grant general permission to enter the regulated area.

Dated: May 29, 2013.

M.F. White,

Captain, U.S. Coast Guard, Captain of the Port Charleston.

[FR Doc. 2013–14118 Filed 6–13–13; 8:45 am]

BILLING CODE 9110–04–P

DEPARTMENT OF HOMELAND SECURITY

Coast Guard

33 CFR Part 117

[USCG–2013–0425]

Drawbridge Operation Regulations; Harlem River, New York City, NY

AGENCY: Coast Guard, DHS.

ACTION: Notice of temporary deviation from regulations.

SUMMARY: The Commander, First Coast Guard District, has issued a temporary deviation from the regulation governing the operation of the Willis Avenue Bridge across the Harlem River, mile 1.5, at the Bronx, New York. The deviation is necessary to facilitate electrical repairs at the bridge. Under this temporary deviation, the bridge may remain in the closed position for four weeks to facilitate scheduled repairs.

DATES: This deviation is effective from June 17, 2013 through July 12, 2013.

ADDRESSES: The docket for this deviation, [USCG–2013–0425] is available at *http://www.regulations.gov.* Type the docket number in the ''SEARCH'' box and click ''SEARCH.'' Click on Open Docket Folder on the line associated with this deviation. You may also visit the Docket Management Facility in Room W12–140, on the ground floor of the Department of Transportation West Building, 1200 New Jersey Avenue SE., Washington, DC 20590, between 9 a.m. and 5 p.m., Monday through Friday, except Federal holidays.

FOR FURTHER INFORMATION CONTACT: If you have questions on this temporary deviation, call or email Mr. Joe Arca, Project Officer, First Coast Guard District, *joe.m.arca@uscg.mil,* or (212) 668–7165. If you have questions on viewing the docket, call Barbara Hairston, Program Manager, Docket Operations, telephone 202–366–9826.

SUPPLEMENTARY INFORMATION: The Willis Avenue Bridge has a vertical clearance of 24 feet at mean high water and 30 feet at mean low water in the closed position. The existing drawbridge operating regulations are found at 33 CFR 117.789(b)(2).

The bridge owner, New York City Department of Transportation, requested a four week closure from June 17, 2013 through July 12, 2013, to facilitate electrical repairs at the bridge.

The waterway users are commercial tug and barge traffic as well as various sized recreational craft. Local facilities were advised of the closures with no objections received.

In accordance with 33 CFR 117.35(e), the bridge must return to its regular operating schedule immediately at the end of the designated repair period. This deviation from the operating regulations is authorized under 33 CFR 117.35.

Dated: June 5, 2013.

Gary Kassof,

Bridge Program Manager, First Coast Guard District.

[FR Doc. 2013–14117 Filed 6–13–13; 8:45 am]

BILLING CODE 9110–04–P

DEPARTMENT OF HOMELAND SECURITY

Coast Guard

33 CFR Part 117

[USCG–2013–0464]

Drawbridge Operation Regulations; Charles River, Boston, MA

AGENCY: Coast Guard, DHS.

ACTION: Notice of temporary deviation from regulations.

SUMMARY: The Commander, First Coast Guard District, has issued a temporary

deviation from the regulations governing the operation of the Metropolitan District Commission (Craigie) Bridge across the Charles River, mile 1.0, at Boston, Massachusetts. Under this temporary deviation the bridge may remain in the closed position for two hours on July 4, 2013, to facilitate the Fourth of July Concert and Fireworks. This deviation is necessary to facilitate public safety during a public event.

DATES: This deviation is effective from 11 p.m. on July 4, 2013 through 1 a.m. on July 5, 2013.

ADDRESSES: The docket for this deviation, [USCG–2013–0464] is available at *http://www.regulations.gov.* Type the docket number in the ''SEARCH'' box and click ''SEARCH.'' Click on Open Docket Folder on the line associated with this deviation. You may also visit the Docket Management Facility in Room W12–140 on the ground floor of the Department of Transportation West Building, 1200 New Jersey Avenue SE., Washington, DC 20590, between 9 a.m. and 5 p.m., Monday through Friday, except Federal holidays.

FOR FURTHER INFORMATION CONTACT: If you have questions on this temporary deviation, call John McDonald, Project Officer, First Coast Guard District, at (617) 223–8364. If you have questions on viewing the docket, call Barbara Hairston, Program Manager, Docket Operations, telephone (202) 366–9826.

SUPPLEMENTARY INFORMATION: The Metropolitan District Commission (Craigie) Bridge, across the Charles River, mile 1.0, at Boston, Massachusetts, has a vertical clearance in the closed position of 13.5 feet at normal pool elevation above the Charles River Dam. The existing drawbridge operation regulations are listed at 33 CFR § 117.591(e).

The waterway is predominantly a recreational waterway supporting various size vessels.

The owner of the bridge, Massachusetts Department of Transportation, requested a temporary deviation to facilitate public safety during a public event, the 2012 Fourth of July Concert and Fireworks.

Under this temporary deviation, in effect from 11 p.m. on July 4, 2013 through 1 a.m. on July 5, 2013, the Metropolitan District Commission (Craigie) Bridge, mile 1.0, across the Charles River at Boston, Massachusetts, may remain in the closed position.

Vessels that can pass under the bridge without a bridge opening may do so at all times.

In accordance with 33 CFR 117.35(e), the bridge must return to its regular operating schedule immediately at the end of the designated time period. This deviation from the operating regulations is authorized under 33 CFR 117.35.

Dated: June 4, 2013.

Gary Kassof,

Bridge Program Manager, First Coast Guard District.

[FR Doc. 2013–14120 Filed 6–13–13; 8:45 am]

BILLING CODE 9110–04–P

DEPARTMENT OF HOMELAND SECURITY

Coast Guard

33 CFR Part 117

[Docket Number USCG–2013–0459]

Drawbridge Operation Regulation; St. Croix River, Stillwater, MN

AGENCY: Coast Guard, DHS.

ACTION: Notice of deviation from drawbridge regulation.

SUMMARY: The Coast Guard has issued a temporary deviation from the operating schedule that governs the Stillwater Highway Drawbridge across the St. Croix River, mile 23.4, at Stillwater, Minnesota. The deviation is necessary, due to increased vehicular traffic after a local 4th of July fireworks display. The deviation allows the bridge to be in the closed-to-navigation position to clear increased traffic congestion.

DATES: This deviation is effective from 10 p.m. to 11:30 p.m., July 4, 2013.

ADDRESSES: The docket for this deviation, [USCG–2013–0459] is available at *http://www.regulations.gov.* Type the docket number in the ''SEARCH'' box and click ''SEARCH.'' Click on Open Docket Folder on the line associated with this deviation. You may also visit the Docket Management Facility in Room W12–140 on the ground floor of the Department of Transportation West Building, 1200 New Jersey Avenue SE., Washington, DC 20590, between 9 a.m. and 5 p.m., Monday through Friday, except Federal holidays.

FOR FURTHER INFORMATION CONTACT: If you have questions on this temporary deviation, call or email Eric A. Washburn, Bridge Administrator, Western Rivers, Coast Guard; telephone (314) 269–2378, email *Eric.Washburn@uscg.mil.* If you have questions on viewing the docket, call Barbara Hairston, Program Manager, Docket Operations, telephone (202) 366–9826.

SUPPLEMENTARY INFORMATION: The Minnesota Department of Transportation requested a temporary deviation for the Stillwater Highway Drawbridge, across the St. Croix River, mile 23.4, at Stillwater, Minnesota to be closed-to-navigation on July 4, 2013 as follows:

From 10:00 p.m. to 11:30 p.m. on July 4, 2013, lift span will remain in the closed-to-navigation position.

The Stillwater Highway Drawbridge currently operates in accordance with 33 CFR 117.667(b), which states specific seasonal and commuter hours operating requirements.

There are no alternate routes for vessels transiting this section of the St. Croix River.

The Stillwater Highway Drawbridge, in the closed-to-navigation position, provides a vertical clearance of 10.9 feet above normal pool. Navigation on the waterway primarily consists of commercial sightseeing/dinner cruise boats and recreational watercraft. This temporary deviation has been coordinated with waterway users. No objections were received.

In accordance with 33 CFR 117.35(e), the drawbridge must return to its regular operating schedule immediately at the end of the effective period of this temporary deviation. This deviation from the operating regulations is authorized under 33 CFR 117.35.

Dated: May 31, 2013.

Eric A. Washburn,

Bridge Administrator, Western Rivers.

[FR Doc. 2013–14121 Filed 6–13–13; 8:45 am]

BILLING CODE 9110–04–P

DEPARTMENT OF HOMELAND SECURITY

Coast Guard

33 CFR Part 117

[USCG–2013–0395]

Drawbridge Operation Regulations; Connecticut River, Westport, CT

AGENCY: Coast Guard, DHS.

ACTION: Notice of temporary deviation from regulations.

SUMMARY: The Commander, First Coast Guard District, has issued a temporary deviation from the regulation governing the operation of the Route 82 Bridge across the Connecticut River, mile 16.8, between East Haddam and Haddam, Connecticut. The deviation is necessary to facilitate public safety during a public event, the bridge's 100th Anniversary Parade. Under this temporary deviation,

the bridge may remain closed for two and one half hours.

DATES: This deviation is effective between 8 a.m. and 10:30 a.m. on June 15, 2013.

ADDRESSES: The docket for this deviation, [USCG–2013–0395] is available at *http://www.regulations.gov.* Type the docket number in the ''SEARCH'' box and click ''SEARCH.'' Click on Open Docket Folder on the line associated with this deviation. You may also visit the Docket Management Facility in Room W12–140, on the ground floor of the Department of Transportation West Building, 1200 New Jersey Avenue SE., Washington, DC 20590, between 9 a.m. and 5 p.m., Monday through Friday, except Federal holidays.

FOR FURTHER INFORMATION CONTACT: If you have questions on this temporary deviation, call or email Ms. Judy Leung-Yee, Project Officer, First Coast Guard District, *judy.k.leung-yee@uscg.mil,* or (212) 668–7165. If you have questions on viewing the docket, call Barbara Hairston, Program Manager, Docket Operations, telephone 202–366–9826.

SUPPLEMENTARY INFORMATION: The Route 82 Bridge has a vertical clearance of 22 feet at mean high water and 25 feet at mean low water in the closed position. The existing drawbridge operating regulations are found at 33 CFR 117.205(c).

The bridge owner, Connecticut Department of Transportation, requested a two and a half hour closure to facilitate public safety during a public event, the 100th Anniversary Parade at the bridge.

Under this temporary deviation the bridge may remain in the closed position between 8 a.m. and 10:30 a.m. on June 15, 2013. Vessels that can pass under the bridge without a bridge opening may do so at all times.

The Connecticut River supports both commercial and recreational navigation of various sizes.

In accordance with 33 CFR 117.35(e), the bridge must return to its regular operating schedule immediately at the end of the designated deviation period. This deviation from the operating regulations is authorized under 33 CFR 117.35.

Dated: June 4, 2013.

Gary Kassof,

Bridge Program Manager, First Coast Guard District.

[FR Doc. 2013–14123 Filed 6–13–13; 8:45 am]

BILLING CODE 9110–04–P

DEPARTMENT OF HOMELAND SECURITY

Coast Guard

33 CFR Part 117

[Docket No. USCG–2013–0412]

Drawbridge Operation Regulation; Bishop Cut, Near Stockton, CA

AGENCY: Coast Guard, DHS.

ACTION: Notice of deviation from drawbridge regulation.

SUMMARY: The Coast Guard has issued a temporary deviation from the operating regulation that governs the San Joaquin County Highway Bridge across Bishop Cut, mile 1.0, near Stockton, CA. The deviation is to allow San Joaquin County Public Works Department to perform structural maintenance work to the bridge. This deviation allows the bridge to remain in the closed-to-navigation position during the repairs.

DATES: This deviation is effective from 12:01 a.m. on September 30, 2013 to 11:59 p.m. on October 31, 2013.

ADDRESES: The docket for this deviation, [USCG–2013–0412], is available at *http://www.regulations.gov.* Type the docket number in the ''SEARCH'' box and click ''SEARCH.'' Click on Open Docket Folder on the line associated with this deviation. You may also visit the Docket Management Facility in Room W12–140 on the ground floor of the Department of Transportation West Building, 1200 New Jersey Avenue SE., Washington, DC 20590, between 9 a.m. and 5 p.m., Monday through Friday, except Federal holidays.

FOR FURTHER INFORMATION CONTACT: If you have questions on this rule, call or email David H. Sulouff, Chief, Bridge Section, Eleventh Coast Guard District; telephone 510–437–3516, email *David.H.Sulouff@uscg.mil* If you have questions on viewing the docket, call Barbara Hairston, Program Manager, Docket Operations, telephone 202–366–9826.

SUPPLEMENTARY INFORMATION: San Joaquin County Department of Public Works has requested a temporary change to the operation of the San Joaquin County Highway Bridge, mile 1.0, over Bishop Cut, near Stockton, CA. The drawbridge navigation span provides a vertical clearance of approximately 6 feet above Mean High Water in the closed-to-navigation position. In accordance with 33 CFR 117.143, the draw opens on signal if at least 12 hours notice is given to the San Joaquin County Department of Public Works at Stockton. Navigation on the waterway is commercial and recreational.

The drawspan will be secured in the closed-to-navigation position from 12:01 a.m. on September 30, 2013 to 11:59 p.m. on October 31, 2013, due to structural maintenance work in replacing the approach deck slabs. The work will require loss of power to the bridge electrical systems.

This temporary deviation has been coordinated with commercial operators and various marinas. No objections to the proposed temporary deviation were raised. Vessels that can transit the bridge, while in the closed-to-navigation position, may continue to do so at any time.

In accordance with 33 CFR 117.35(e), the drawbridge must return to its regular operating schedule immediately at the end of the designated time period. This deviation from the operating regulations is authorized under 33 CFR 117.35.

Dated: May 24, 2013.

D.H. Sulouff,

District Bridge Chief, Eleventh Coast Guard District.

[FR Doc. 2013–14122 Filed 6–13–13; 8:45 am]

BILLING CODE 9110–04–P

DEPARTMENT OF EDUCATION

34 CFR Chapter III

[CFDA Number: 84.133B–1]

Final Priority; National Institute on Disability and Rehabilitation Research—Rehabilitation Research and Training Centers

AGENCY: Office of Special Education and Rehabilitative Services, Department of Education.

ACTION: Final priority.

SUMMARY: The Assistant Secretary for Special Education and Rehabilitative Services announces a priority for the Disability and Rehabilitation Research Projects and Centers Program administered by the National Institute on Disability and Rehabilitation Research (NIDRR). Specifically, we announce a priority for a Rehabilitation Research and Training Center (RRTC) on Research and Capacity Building for Minority Entities. The Assistant Secretary may use this priority for competitions in fiscal year (FY) 2013 and later years. We take this action to focus research attention on areas of national need. We intend this priority to improve outcomes among individuals with disabilities.

DATES: *Effective Date:* This priority is effective July 15, 2013.

FOR FURTHER INFORMATION CONTACT: Marlene Spencer, U.S. Department of Education, 400 Maryland Avenue SW., Room 5133, Potomac Center Plaza (PCP), Washington, DC 20202–2700. Telephone: (202) 245–7532 or by email: *marlene.spencer@ed.gov.*

If you use a telecommunications device for the deaf (TDD) or a text telephone (TTY), call the Federal Relay Service (FRS), toll free, at 1–800–877–8339.

SUPPLEMENTARY INFORMATION:

Purpose of Program: The purpose of the Disability and Rehabilitation Research Projects and Centers Program is to plan and conduct research, demonstration projects, training, and related activities, including international activities, to develop methods, procedures, and rehabilitation technology that maximize the full inclusion and integration into society, employment, independent living, family support, and economic and social self-sufficiency of individuals with disabilities, especially individuals with the most severe disabilities, and to improve the effectiveness of services authorized under the Rehabilitation Act of 1973, as amended (Rehabilitation Act).

Rehabilitation Research and Training Centers

The purpose of the RRTCs, which are funded through the Disability and Rehabilitation Research Projects and Centers Program, is to improve the effectiveness of services authorized under the Rehabilitation Act through advanced research, training, technical assistance, and dissemination activities in general problem areas, as specified by NIDRR. Such activities are designed to benefit rehabilitation service providers, individuals with disabilities, and the family members or other authorized representatives of individuals with disabilities. Additional information on the RRTC program can be found at: *www.ed.gov/rschstat/research/pubs/res-program.html#RRTC.*

Program Authority: 29 U.S.C. 762(g) and 764(b)(2).

Applicable Program Regulations: 34 CFR part 350.

We published a notice of proposed priority in the **Federal Register** on March 6, 2013 (78 FR 14480). That notice contained background information and our reasons for proposing this priority.

There is one difference between the proposed priority and this final priority. We have updated the reference to NIDRR's current Long-Range Plan in paragraph (a). NIDRR's Long-Range Plan for Fiscal Years 2013–2017 (Plan) was published in the **Federal Register** on April 4, 2013 (78 FR 20299) during the public comment period for this priority.

Public Comment: In response to our invitation in the notice of proposed priority, three parties submitted comments on the proposed priority.

Generally, we do not address technical and other minor changes or suggested changes the law does not authorize us to make under the applicable statutory authority. In addition, generally we do not address comments that raise concerns not directly related to the proposed priority or definitions.

Analysis of Comments and Changes: An analysis of the comments and of any changes in the priority since publication of the proposed priority follows.

Comment: One commenter asked whether the RRTC must focus its activities on the Federal-State vocational rehabilitation (VR) program and its mission of assisting individuals with disabilities to become employed.

Discussion: Although applicants may choose to focus their research activities on topics related to the Federal-State VR program, they are not required to do so.

Changes: None.

Comment: One commenter asked whether military veterans of color with disabilities would be a valid target population of ''traditionally underserved racial and ethnic populations,'' as described in paragraph (a) of the priority.

Discussion: Yes. ''Traditionally Underserved Populations'' is used in Section 21 of the Rehabilitation Act to refer to minority populations who have historically had high rates of disability, low rates of access to rehabilitation services, and relatively poor outcomes, compared to white individuals with disabilities. Applicants are free to propose and justify a focus on veterans of color with disabilities or any other underserved population. The peer review process will determine the merits of each application.

Changes: None.

Comment: One commenter noted that conducting research on the experiences and outcomes of individuals with disabilities from traditionally underserved racial and ethnic populations, as required by paragraph (a) of the priority, necessitates the availability and involvement of research personnel with appropriate cultural and linguistic capabilities.

Discussion: NIDRR generally agrees that the personnel proposed to conduct required RRTC activities must have the appropriate backgrounds and expertise. NIDRR does not typically specify or require those areas of expertise in its priorities. Instead, we rely on the peer review process to determine the quality of the proposed personnel's training, experience, and knowledge in the areas specified in the priority. These personnel considerations are spelled out in the peer review criteria for project staff that we employ in all NIDRR competitions (34 CFR 350.54(n)).

Changes: None.

Comment: One commenter suggested that the priority include cultural competence in the Center's required capacity building efforts.

Discussion: As we described in the background to the proposed priority (78 FR 14480), NIDRR anticipates that the minority entities that are the recipients of the RRTC's capacity building efforts will already have close social and cultural connections to individuals with disabilities from minority backgrounds. Building the capacity of minority entities to conduct disability and rehabilitation research may include a focus on cultural competence. However, there is a wide range of other disability and rehabilitation research capacities to be built at minority entities and on which applicants may choose to focus—developing a robust research infrastructure, including administrative and technological support, research libraries, and research-focused graduate and postdoctoral research training programs, for example. While nothing in the priority precludes applicants from including cultural competence as a component of their capacity building efforts, NIDRR does not wish to limit the range of applications that we receive by requiring all applicants to do so.

Changes: None.

Comment: One commenter questioned the need for this priority.

Discussion: By publishing this priority and creating an RRTC on Research and Capacity Building for Minority Entities, we are fulfilling the intent and the requirements of Section 21 of the Rehabilitation Act.

Changes: None.

Final Priority

Background

This final priority is in concert with NIDRR's Plan, which can be accessed on the Internet at the following site: *www.ed.gov/about/offices/list/osers/nidrr/policy.html.*

Through the implementation of the Plan, NIDRR seeks to improve the health and functioning, employment, and community living and participation of individuals with disabilities through comprehensive programs of research,

engineering, training, technical assistance, and knowledge translation and dissemination. The Plan reflects NIDRR's commitment to quality, relevance, and balance in its programs to ensure appropriate attention to all aspects of well-being of individuals with disabilities and to all types and degrees of disability, including low-incidence and severe disabilities.

Priority—RRTC on Research and Capacity Building for Minority Entities

The Assistant Secretary for Special Education and Rehabilitative Services establishes a priority for a Rehabilitation Research and Training Center (RRTC) on Research and Capacity Building for Minority Entities. One purpose of the RRTC is to generate new knowledge about the experiences and outcomes of individuals with disabilities from racial and ethnic minority backgrounds that can be used as a foundation for developing interventions to improve those outcomes. Another purpose of the RRTC is to enhance rehabilitation research capacity at minority entities, as defined in section 21 of the Rehabilitation Act (29 U.S.C. 718). The RRTC must contribute to these outcomes by:

(a) Conducting research that examines experiences and outcomes of individuals with disabilities from traditionally underserved racial and ethnic populations. Applicants must focus their research activities on topics that fall under at least one of the following major life domains identified in NIDRR's Long-Range Plan for Fiscal Years 2013–2017 (78 FR 20299): (1) Employment, (2) Community Living and Participation, or (3) Health and Function.

(b) Conducting research on the feasibility and potential effectiveness of methods and models for enhancing disability and rehabilitation research capacity and infrastructure at minority entities.

(c) Serving as a national resource center for minority entities that are seeking to develop their research infrastructure, and to enhance their capacity to engage in disability and rehabilitation research. The RRTC must provide technical assistance and training to minority entities in order to develop their institutional research infrastructure and enhance their capacity to conduct disability and rehabilitation research.

(d) Involving individuals with disabilities from traditionally underserved racial and ethnic populations in planning and implementing the RRTC's activities and evaluating its work.

(e) Providing outreach and training that enhances awareness of NIDRR and its research programs among minority entities.

(f) Developing and implementing a strategy for disseminating research, training, and technical assistance products developed by the RRTC. The RRTC's dissemination strategy must include an online information dissemination system that meets a government- or industry-recognized standard for accessibility by individuals with disabilities.

Types of Priorities

When inviting applications for a competition using one or more priorities, we designate the type of each priority as absolute, competitive preference, or invitational through a notice in the **Federal Register**. The effect of each type of priority follows:

Absolute priority: Under an absolute priority, we consider only applications that meet the priority (34 CFR 75.105(c)(3)).

Competitive preference priority: Under a competitive preference priority, we give competitive preference to an application by (1) awarding additional points, depending on the extent to which the application meets the priority (34 CFR 75.105(c)(2)(i)); or (2) selecting an application that meets the priority over an application of comparable merit that does not meet the priority (34 CFR 75.105(c)(2)(ii)).

Invitational priority: Under an invitational priority, we are particularly interested in applications that meet the priority. However, we do not give an application that meets the priority a preference over other applications (34 CFR 75.105(c)(1)).

This notice does not preclude us from proposing additional priorities, requirements, definitions, or selection criteria, subject to meeting applicable rulemaking requirements.

Note: This notice does *not* solicit applications. In any year in which we choose to use this priority, we invite applications through a notice in the **Federal Register**.

Executive Orders 12866 and 13563

Regulatory Impact Analysis

Under Executive Order 12866, the Secretary must determine whether this regulatory action is ''significant'' and, therefore, subject to the requirements of the Executive order and subject to review by the Office of Management and Budget (OMB). Section 3(f) of Executive Order 12866 defines a ''significant regulatory action'' as an action likely to result in a rule that may—

(1) Have an annual effect on the economy of $100 million or more, or adversely affect a sector of the economy, productivity, competition, jobs, the environment, public health or safety, or State, local, or tribal governments or communities in a material way (also referred to as an ''economically significant'' rule);

(2) Create serious inconsistency or otherwise interfere with an action taken or planned by another agency;

(3) Materially alter the budgetary impacts of entitlement grants, user fees, or loan programs or the rights and obligations of recipients thereof; or

(4) Raise novel legal or policy issues arising out of legal mandates, the President's priorities, or the principles stated in the Executive order.

This final regulatory action is not a significant regulatory action subject to review by OMB under section 3(f) of Executive Order 12866.

We have also reviewed this final regulatory action under Executive Order 13563, which supplements and explicitly reaffirms the principles, structures, and definitions governing regulatory review established in Executive Order 12866. To the extent permitted by law, Executive Order 13563 requires that an agency—

(1) Propose or adopt regulations only upon a reasoned determination that their benefits justify their costs (recognizing that some benefits and costs are difficult to quantify);

(2) Tailor its regulations to impose the least burden on society, consistent with obtaining regulatory objectives and taking into account—among other things and to the extent practicable—the costs of cumulative regulations;

(3) In choosing among alternative regulatory approaches, select those approaches that maximize net benefits (including potential economic, environmental, public health and safety, and other advantages; distributive impacts; and equity);

(4) To the extent feasible, specify performance objectives, rather than the behavior or manner of compliance a regulated entity must adopt; and

(5) Identify and assess available alternatives to direct regulation, including economic incentives—such as user fees or marketable permits—to encourage the desired behavior, or provide information that enables the public to make choices.

Executive Order 13563 also requires an agency ''to use the best available techniques to quantify anticipated present and future benefits and costs as accurately as possible.'' The Office of Information and Regulatory Affairs of OMB has emphasized that these

techniques may include ''identifying changing future compliance costs that might result from technological innovation or anticipated behavioral changes.''

We are issuing this final priority only on a reasoned determination that its benefits justify its costs. In choosing among alternative regulatory approaches, we selected those approaches that maximize net benefits. Based on the analysis that follows, the Department believes that this regulatory action is consistent with the principles in Executive Order 13563.

We also have determined that this regulatory action does not unduly interfere with State, local, and tribal governments in the exercise of their governmental functions.

In accordance with both Executive orders, the Department has assessed the potential costs and benefits, both quantitative and qualitative, of this regulatory action. The potential costs are those resulting from statutory requirements and those we have determined as necessary for administering the Department's programs and activities.

The benefits of the Disability and Rehabilitation Research Projects and Centers Program have been well established over the years. Projects similar to the new RRTC have been completed successfully, and the new RRTC, established consistently with this final priority, is expected to improve the lives of individuals with disabilities from minority backgrounds; generate through research and development, disseminate, and promote the use of new information that will improve the outcomes for individuals with disabilities; and increase the capacity of minority entities to conduct disability and rehabilitation research and develop rehabilitation research professionals.

Accessible Format: Individuals with disabilities can obtain this document in an accessible format (e.g., braille, large print, audiotape, or compact disc) on request to the program contact person listed under **FOR FURTHER INFORMATION CONTACT**.

Electronic Access to This Document: The official version of this document is the document published in the **Federal Register**. Free Internet access to the official edition of the **Federal Register** and the Code of Federal Regulations is available via the Federal Digital System at: *www.gpo.gov/fdsys*. At this site you can view this document, as well as all other documents of this Department published in the **Federal Register,** in text or Adobe Portable Document Format (PDF). To use PDF you must have Adobe Acrobat Reader, which is available free at the site.

You may also access documents of the Department published in the **Federal Register** by using the article search feature at: *www.federalregister.gov*. Specifically, through the advanced search feature at this site, you can limit your search to documents published by the Department.

Dated: June 11, 2013.

Michael K. Yudin,

Delegated the authority to perform the functions and the duties of the Assistant Secretary for Special Education and Rehabilitative Services.

[FR Doc. 2013–14227 Filed 6–13–13; 8:45 am]

BILLING CODE 4000–01–P

DEPARTMENT OF EDUCATION

34 CFR Chapter III

Final Priority; National Institute on Disability and Rehabilitation Research—Disability and Rehabilitation Research Projects and Centers Program—Rehabilitation Engineering Research Centers

AGENCY: Office of Special Education and Rehabilitative Services, Department of Education.

ACTION: Final priority.

[CFDA Number: 84.133E–4.]

SUMMARY: The Assistant Secretary for Special Education and Rehabilitative Services announces a priority for a Rehabilitation Engineering Research Center (RERC) on Universal Interfaces and Information Technology Access under the Disability and Rehabilitation Research Projects and Centers Program administered by the National Institute on Disability and Rehabilitation Research (NIDRR). The Assistant Secretary may use this priority for a competition in fiscal year (FY) 2013 and later years. We take this action to focus research attention on areas of national need. We intend to use this priority to improve outcomes for individuals with disabilities.

DATES: *Effective Date:* This priority is effective July 15, 2013.

FOR FURTHER INFORMATION CONTACT: Marlene Spencer, U.S. Department of Education, 400 Maryland Avenue SW., room 5133, Potomac Center Plaza (PCP), Washington, DC 20202–2700. Telephone: (202) 245–7532 or by email: *marlene.spencer@ed.gov*.

If you use a telecommunications device for the deaf (TDD) or a text telephone (TTY), call the Federal Relay Service (FRS), toll free, at 1–800–877–8339.

SUPPLEMENTARY INFORMATION: This notice of final priority is in concert with NIDRR's Long-Range Plan (Plan) for Fiscal Years 2013–2017. The Plan, which was published in the **Federal Register** on April 4, 2013 (78 FR 20299), can be accessed on the Internet at the following site: *www.ed.gov/about/offices/list/osers/nidrr/policy.html*.

Through the implementation of the Plan, NIDRR seeks to improve the health and functioning, employment, and community living and participation of individuals with disabilities through comprehensive programs of research, engineering, training, technical assistance, and knowledge translation and dissemination. The Plan reflects NIDRR's commitment to quality, relevance, and balance in its programs to ensure appropriate attention to all aspects of well-being of individuals with disabilities and to all types and degrees of disability, including low-incidence and severe disabilities.

Purpose of Program: The purpose of the Disability and Rehabilitation Research Projects and Centers Program is to plan and conduct research, demonstration projects, training, and related activities, including international activities, to develop methods, procedures, and rehabilitation technology that maximize the full inclusion and integration into society, employment, independent living, family support, and economic and social self-sufficiency of individuals with disabilities, especially individuals with the most severe disabilities; and to improve the effectiveness of services authorized under the Rehabilitation Act of 1973, as amended (Rehabilitation Act).

Rehabilitation Engineering Research Centers Program

The purpose of NIDRR's RERCs program, which is funded through the Disability and Rehabilitation Research Projects and Centers Program, is to improve the effectiveness of services authorized under the Rehabilitation Act. It does so by conducting advanced engineering research, developing and evaluating innovative technologies, facilitating service delivery system changes, stimulating the production and distribution of new technologies and equipment in the private sector, and providing training opportunities. RERCs seek to solve rehabilitation problems and remove environmental barriers to improvements in employment, community living and participation, and health and function outcomes of individuals with disabilities.

The general requirements for RERCs are set out in subpart D of 34 CFR part

350 (What Rehabilitation Engineering Research Centers Does the Secretary Assist?).

Additional information on the RERCs program can be found at: *www.ed.gov/rschstat/research/pubs/index.html.*

Program Authority: 29 U.S.C. 762(g) and 764(b)(3).

Applicable Program Regulations: 34 CFR part 350.

We published a proposed priority for this program in the **Federal Register** on April 17, 2013 (78 FR 22817). That notice contained background information and our reasons for proposing the particular priority.

Public Comment: In response to our invitation in the notice of proposed priority, we did not receive any comments on the proposed priority.

Final Priority

Universal Interfaces and Information Technology Access

Under this priority, the RERC must research, develop, and evaluate innovative solutions to the problem of inaccessibility of current and emerging information technologies and technology interfaces for individuals with disabilities. These solutions may include cloud computing applications that allow for personalized accessible interfaces. The RERC must focus its research and development activities on promoting access for individuals with disabilities to the multiple technologies used in the home, the community, and the workplace. The RERC must research, develop, and evaluate built-in accessibility and flexibility features in interfaces of mainstream products. The technical approaches developed by the RERC must have the following characteristics: (i) They must make it possible for people with disabilities to access and use the same mainstream IT products as consumers generally, to the greatest extent achievable, rather than requiring people with disabilities to use specialized products; (ii) They must support access and use by people with the widest achievable range of disabilities, rather than being limited only to particular disability groups; (iii) They must provide as much as possible a consistent user interface, when applied to different products; (iv) They must be designed to be extensible, so as to be applicable to new IT products as they emerge; and (v) They must be developed along with methods that would enable developers of IT products to incorporate the new approaches into IT products at reasonable cost. In addition, this RERC must research, develop, and evaluate simple and inexpensive ways to activate and control IT access features for use by individuals with disabilities. This RERC must work collaboratively with the RERC on Telecommunication Access and the RERC on Mobile Wireless Technologies.

General RERC Requirements

Under this priority, the RERC must be designed to contribute to the following outcomes:

(1) Increased technical and scientific knowledge relevant to its priority research area. The RERC must contribute to this outcome by conducting high-quality, rigorous research and development projects.

(2) Increased innovation in technologies, products, environments, performance guidelines, and monitoring and assessment tools applicable to its priority research area. The RERC must contribute to this outcome through the development and testing of these innovations.

(3) Improved research capacity in its priority research area. The RERC must contribute to this outcome by collaborating with the relevant industry, professional associations, institutions of higher education, health care providers, or educators, as appropriate.

(4) Improved usability and accessibility of products and environments in the RERC's priority research area. The RERC must contribute to this outcome by emphasizing the principles of universal design in its product research and development. For purposes of this section, the term ''universal design'' means the design of products and environments to be usable by all people, to the greatest extent possible, without the need for adaptation or specialized design.

(5) Improved awareness and understanding of cutting-edge developments in technologies within its priority research area. The RERC must contribute to this outcome by identifying and communicating with relevant stakeholders, including NIDRR; individuals with disabilities and their representatives; disability organizations; service providers; editors of professional journals; manufacturers; and other interested parties regarding trends and evolving product concepts related to its priority research area.

(6) Increased dissemination of research in the priority research area. The RERC must contribute to this outcome by providing technical assistance to relevant public and private organizations, individuals with disabilities, employers, and schools on policies, guidelines, and standards related to its priority research area.

(7) Increased transfer of RERC-developed technologies to the marketplace. The RERC must contribute to this outcome by developing and implementing a plan for ensuring that all technologies developed by the RERC are made available to the public. The technology transfer plan must be developed in the first year of the project period in consultation with the NIDRR-funded Disability Rehabilitation Research Project, Center on Knowledge Translation for Technology Transfer.

In addition, under this priority, the RERC must—

- Have the capability to design, build, and test prototype devices and assist in the technology transfer and knowledge translation of successful solutions to relevant production and service delivery settings;
- Evaluate the efficacy and safety of its new products, instrumentation, or assistive devices;
- Provide as part of its proposal, and then implement, a plan that describes how it will include, as appropriate, individuals with disabilities or their representatives in all phases of its activities, including research, development, training, dissemination, and evaluation;
- Provide as part of its proposal, and then implement, a plan to disseminate its research results to individuals with disabilities and their representatives; disability organizations; service providers; professional journals; manufacturers; and other interested parties. In meeting this requirement, each RERC may use a variety of mechanisms to disseminate information, including state-of-the-science conferences, webinars, Web sites, and other dissemination methods; and
- Coordinate research projects of mutual interest with relevant NIDRR-funded projects, as identified through consultation with the NIDRR project officer.

Types of Priorities

When inviting applications for a competition using one or more priorities, we designate the type of each priority as absolute, competitive preference, or invitational through a notice in the **Federal Register**. The effect of each type of priority follows:

Absolute priority: Under an absolute priority, we consider only applications that meet the priority (34 CFR 75.105(c)(3)).

Competitive preference priority: Under a competitive preference priority, we give competitive preference to an application by (1) awarding additional

points, depending on the extent to which the application meets the priority (34 CFR 75.105(c)(2)(i)); or (2) selecting an application that meets the priority over an application of comparable merit that does not meet the priority (34 CFR 75.105(c)(2)(ii)).

Invitational priority: Under an invitational priority, we are particularly interested in applications that meet the priority. However, we do not give an application that meets the priority a preference over other applications (34 CFR 75.105(c)(1)).

This notice does not preclude us from proposing additional priorities, requirements, definitions, or selection criteria, subject to meeting applicable rulemaking requirements.

Note: This notice does *not* solicit applications. In any year in which we choose to use this priority, we invite applications through a notice in the **Federal Register.**

Executive Orders 12866 and 13563

Regulatory Impact Analysis

Under Executive Order 12866, the Secretary must determine whether this regulatory action is ''significant'' and, therefore, subject to the requirements of the Executive order and subject to review by the Office of Management and Budget (OMB). Section 3(f) of Executive Order 12866 defines a ''significant regulatory action'' as an action likely to result in a rule that may—

(1) Have an annual effect on the economy of $100 million or more, or adversely affect a sector of the economy, productivity, competition, jobs, the environment, public health or safety, or State, local, or tribal governments or communities in a material way (also referred to as an ''economically significant'' rule);

(2) Create serious inconsistency or otherwise interfere with an action taken or planned by another agency;

(3) Materially alter the budgetary impacts of entitlement grants, user fees, or loan programs or the rights and obligations of recipients thereof; or

(4) Raise novel legal or policy issues arising out of legal mandates, the President's priorities, or the principles stated in the Executive order.

This final regulatory action is not a significant regulatory action subject to review by OMB under section 3(f) of Executive Order 12866.

We have also reviewed this final regulatory action under Executive Order 13563, which supplements and explicitly reaffirms the principles, structures, and definitions governing regulatory review established in Executive Order 12866. To the extent permitted by law, Executive Order 13563 requires that an agency—

(1) Propose or adopt regulations only upon a reasoned determination that their benefits justify their costs (recognizing that some benefits and costs are difficult to quantify);

(2) Tailor its regulations to impose the least burden on society, consistent with obtaining regulatory objectives and taking into account—among other things and to the extent practicable—the costs of cumulative regulations;

(3) In choosing among alternative regulatory approaches, select those approaches that maximize net benefits (including potential economic, environmental, public health and safety, and other advantages; distributive impacts; and equity);

(4) To the extent feasible, specify performance objectives, rather than the behavior or manner of compliance a regulated entity must adopt; and

(5) Identify and assess available alternatives to direct regulation, including economic incentives—such as user fees or marketable permits—to encourage the desired behavior, or provide information that enables the public to make choices.

Executive Order 13563 also requires an agency ''to use the best available techniques to quantify anticipated present and future benefits and costs as accurately as possible.'' The Office of Information and Regulatory Affairs of OMB has emphasized that these techniques may include ''identifying changing future compliance costs that might result from technological innovation or anticipated behavioral changes.''

We are issuing this final priority only upon a reasoned determination that its benefits justify its costs. In choosing among alternative regulatory approaches, we selected those approaches that maximize net benefits. Based on the analysis that follows, the Department believes that this regulatory action is consistent with the principles in Executive Order 13563.

We also have determined that this regulatory action does not unduly interfere with State, local, and tribal governments in the exercise of their governmental functions.

In accordance with both Executive orders, the Department has assessed the potential costs and benefits, both quantitative and qualitative, of this regulatory action. The potential costs are those resulting from statutory requirements and those we have determined as necessary for administering the Department's programs and activities.

The benefits of the Disability and Rehabilitation Research Projects and Centers Program have been well established over the years, as projects similar to the one envisioned by the final priority have been completed successfully. Establishing a new RERC based on the final priority will generate new knowledge through research and development and improve the lives of individuals with disabilities. The new RERC will generate, disseminate, and promote the use of new information that will improve the options for individuals with disabilities to fully participate in their communities.

Accessible Format: Individuals with disabilities can obtain this document in an accessible format (e.g., braille, large print, audiotape, or compact disc) by contacting the Grants and Contracts Services Team, U.S. Department of Education, 400 Maryland Avenue SW., Room 5075, PCP, Washington, DC 20202–2550. Telephone: (202) 245–7363. If you use a TDD or TTY, call the FRS, toll free, at 1–800–877–8339.

Electronic Access to This Document: The official version of this document is the document published in the **Federal Register.** Free Internet access to the official edition of the **Federal Register** and the Code of Federal Regulations is available via the Federal Digital System at: *www.gpo.gov/fdsys.* At this site you can view this document, as well as all other documents of this Department published in the **Federal Register,** in text or Adobe Portable Document Format (PDF). To use PDF you must have Adobe Acrobat Reader, which is available free at the site.

You may also access documents of the Department published in the **Federal Register** by using the article search feature at: *www.federalregister.gov.* Specifically, through the advanced search feature at this site, you can limit your search to documents published by the Department.

Dated: June 11, 2013.

Michael K. Yudin,

Delegated the authority to perform the functions and the duties of the Assistant Secretary for Special Education and Rehabilitative Services.

[FR Doc. 2013–14219 Filed 6–13–13; 8:45 am]

BILLING CODE 4000–01–P

ENVIRONMENTAL PROTECTION AGENCY

40 CFR Part 52

[EPA–R02–OAR–2013–0130, FRL–9824–1]

Approval and Promulgation of Implementation Plans; New Jersey; Infrastructure SIP for the 1997 8-Hour Ozone and the 1997 and 2006 Fine Particulate Matter Standards

AGENCY: Environmental Protection Agency (EPA).

ACTION: Final rule.

SUMMARY: The Environmental Protection Agency (EPA) is approving most elements of New Jersey's State Implementation Plan (SIP) revisions submitted to demonstrate that the State meets the requirements of section 110(a)(1) and (2) of the Clean Air Act (CAA) for the 1997 8-hour ozone and the 1997 and 2006 fine particulate matter ($PM_{2.5}$) National Ambient Air Quality Standards (NAAQS). EPA is conditionally approving certain elements of the submittals, as well as determining that certain elements of New Jersey's submittals do not meet section 110(a)(2) requirements with existing State rules. Section 110(a) of the CAA requires that each state adopt and submit a SIP for the implementation, maintenance and enforcement of each NAAQS promulgated by the EPA and is commonly referred to as an infrastructure SIP.

DATES: *Effective Date:* This rule is effective on July 15, 2013.

ADDRESSES: EPA has established a docket for this action under Docket ID No. EPA–R02–OAR–2013–0130. All documents in the docket are listed on the *www.regulations.gov* Web site. Although listed in the index, some information is not publicly available, e.g., CBI or other information whose disclosure is restricted by statute. Certain other material, such as copyrighted material, is not placed on the Internet and will be publicly available only in hard copy form. Publicly available docket materials are available either electronically through *www.regulations.gov* or in hard copy at the Environmental Protection Agency, Region II Office, Air Programs Branch, 290 Broadway, 25th Floor, New York, New York 10007–1866. The Air Programs Branch dockets are available from 8:30 a.m. to 4:30 p.m., Monday through Friday, excluding legal holidays. The Air Programs Branch telephone number is 212–637–4249.

FOR FURTHER INFORMATION CONTACT: Paul Truchan, Air Programs Branch, Environmental Protection Agency, 290 Broadway, 25th Floor, New York, New York 10007–1866, (212) 637–4249, or by email at *truchan.paul@epa.gov.*

SUPPLEMENTARY INFORMATION:

I. Background and Purpose

Under CAA section 110(a)(1), states are required to submit plans called state implementation plans (SIPs) that provide for the implementation, maintenance and enforcement of each NAAQS and are referred to as infrastructure SIPs. 42 U.S.C. 7410(a)(1). On July 18, 1997, EPA promulgated new and revised NAAQS for 8-hour ozone (62 FR 38856) and $PM_{2.5}$ (62 FR 38652). EPA strengthened the 24-hour $PM_{2.5}$ NAAQS on October 17, 2006 (71 FR 61144). The 14 elements required to be addressed in infrastructure SIPs are as follows: (1) Emission limits and other control measures; (2) ambient air quality monitoring/data system; (3) program for enforcement of control measures; (4) interstate transport; (5) adequate resources; (6) stationary source monitoring system; (7) emergency power; (8) future SIP revisions; (9) consultation with government officials; (10) public notification; (11) prevention of significant deterioration (PSD) and visibility protection; (12) air quality modeling/data; (13) permitting fees, and (14) consultation/participation by affected local entities.

EPA is acting on two New Jersey SIP submittals, dated February 25, 2008 and January 15, 2010, which address the section 110 infrastructure requirements for the three NAAQS: The 1997 8-hour ozone NAAQS, the 1997 annual and 24-hour $PM_{2.5}$ NAAQS, and the 2006 24-hour $PM_{2.5}$ NAAQS. This action does not address the requirements of section 110(a)(2)(D)(i) for the 1997 ozone and 1997 $PM_{2.5}$ NAAQS, since they were addressed in previous rulemakings. See October 1, 2007 (72 FR 55666). Additionally, this action does not address the requirements of section 110(a)(2)(D)(i)(I) for the 2006 $PM_{2.5}$ NAAQS, which was addressed in a previous EPA rulemaking. See July 20, 2011 (76 FR 43153). Two elements identified in section 110(a)(2) are not governed by the three year submission deadline of section 110(a)(1) because SIPs incorporating necessary local nonattainment area controls are not due within three years after promulgation of a new or revised NAAQS, but rather due at the time that the nonattainment area plan requirements are due pursuant to section 172. See 77 FR 46352, 46354 (August 3, 2012) (footnote 3); 77 FR 60307, 60308 (October 3, 2012) (footnote 1). These requirements are: (1) Submissions required by section 110(a)(2)(C) to the extent that subsection refers to a permit program as required in part D Title I of the CAA, and (2) submissions required by section 110(a)(2)(I) which pertain to the nonattainment planning requirements of part D, Title I of the CAA. As a result, this action does not address the above infrastructure elements related to section 110(a)(2)(C) or 110(a)(2)(I).

EPA proposed action on the two SIP revisions on April 10, 2013 (78 FR 21296) and no comments were received on the proposal. The reader is referred to the April 10, 2013 proposed rulemaking for a detailed discussion of New Jersey's submittals and EPA's review and proposed actions.

In a letter dated May 2, 2013, New Jersey committed to address the following 110(a)(2) elements and sub-elements which EPA proposed to conditionally approve: E(ii) (conflict of interest provisions), E(iii) (delegations), and for the 1997 8-hour ozone element (G) (emergency powers) with a SIP submittal within one year of EPA taking final action.

II. What action is EPA taking?

EPA is approving New Jersey's submittals as fully meeting the infrastructure requirements for the 1997 8-hour ozone and the 1997 and 2006 $PM_{2.5}$ NAAQS for the following section 110(a)(2) elements and sub-elements: (A), (B), (C) (as it relates to the enforcement of SIPs), (D)(i)(II) prong 4 (visibility), (E)(i), (F), (H), (J) (consultation), (J) (public notification), (K), (L), and (M). With the full approval of section 110(a)(2)(F), 40 CFR 52.1574 and 40 CFR 52.1575 have been satisfied and EPA is removing them from the CFR.

EPA is conditionally approving New Jersey's submittals for the 1997 8-hour ozone and 1997 and 2006 $PM_{2.5}$ NAAQS for the following 110(a)(2) elements and sub-elements: E(ii) (conflict of interest provisions), E(iii) (delegations), and for the 1997 8-hour ozone element (G) (emergency powers). New Jersey committed in a May 2, 2013 letter to correct the deficiencies and submit them to EPA within one year of this action.

New Jersey has elected to comply with the Federal PSD requirements by accepting delegation of the Federal rules and has been successfully implementing this program for many years. However, EPA does not recognize a delegated PSD program as satisfying the Infrastructure SIP requirements. Therefore, EPA is disapproving New Jersey's submittals for the 1997 8-hour ozone and 1997 and 2006 $PM_{2.5}$ NAAQS section 110(a)(2)

sub-elements: (C), prong 3 of (D)(i)(II), and (J) as they relate to the State's lack of a State adopted PSD program, as well as (D)(ii), which relates to interstate and international pollution abatement and PSD. However, these disapprovals will not trigger any sanctions or additional Federal Implementation Plan obligation since a PSD Federal Implementation Plan is already in place.

III. Statutory and Executive Order Reviews

Under the Clean Air Act, the Administrator is required to approve a SIP submission that complies with the provisions of the Act and applicable Federal regulations. 42 U.S.C. 7410(k); 40 CFR 52.02(a). Thus, in reviewing SIP submissions, EPA's role is to approve state choices, provided that they meet the criteria of the Clean Air Act. Accordingly, this action merely approves state law as meeting Federal requirements and does not impose additional requirements beyond those imposed by state law. For that reason, this action:

- Is not a ''significant regulatory action'' subject to review by the Office of Management and Budget under Executive Order 12866 (58 FR 51735, October 4, 1993);
- does not impose an information collection burden under the provisions of the Paperwork Reduction Act (44 U.S.C. 3501 *et seq.*);
- is certified as not having a significant economic impact on a substantial number of small entities under the Regulatory Flexibility Act (5 U.S.C. 601 *et seq.*);
- does not contain any unfunded mandate or significantly or uniquely affect small governments, as described in the Unfunded Mandates Reform Act of 1995 (Pub. L. 104–4);
- does not have Federalism implications as specified in Executive Order 13132 (64 FR 43255, August 10, 1999);
- is not an economically significant regulatory action based on health or safety risks subject to Executive Order 13045 (62 FR 19885, April 23, 1997);
- is not a significant regulatory action subject to Executive Order 13211 (66 FR 28355, May 22, 2001);
- is not subject to requirements of Section 12(d) of the National Technology Transfer and Advancement Act of 1995 (15 U.S.C. 272 note) because application of those requirements would be inconsistent with the Clean Air Act; and
- does not provide EPA with the discretionary authority to address, as appropriate, disproportionate human health or environmental effects, using practicable and legally permissible methods, under Executive Order 12898 (59 FR 7629, February 16, 1994).

In addition, this rule does not have tribal implications as specified by Executive Order 13175 (65 FR 67249, November 9, 2000), because the SIP is not approved to apply in Indian country located in the state, and EPA notes that it will not impose substantial direct costs on tribal governments or preempt tribal law.

The Congressional Review Act, 5 U.S.C. 801 *et seq.,* as added by the Small Business Regulatory Enforcement Fairness Act of 1996, generally provides that before a rule may take effect, the agency promulgating the rule must submit a rule report, which includes a copy of the rule, to each House of the Congress and to the Comptroller General of the United States. EPA will submit a report containing this action and other required information to the U.S. Senate, the U.S. House of Representatives, and the Comptroller General of the United States prior to publication of the rule in the **Federal Register**. A major rule cannot take effect until 60 days after it is published in the **Federal Register**. This action is not a ''major rule'' as defined by 5 U.S.C. 804(2).

Under section 307(b)(1) of the Clean Air Act, petitions for judicial review of this action must be filed in the United States Court of Appeals for the appropriate circuit by August 13, 2013. Filing a petition for reconsideration by the Administrator of this final rule does not affect the finality of this action for the purposes of judicial review nor does it extend the time within which a petition for judicial review may be filed, and shall not postpone the effectiveness of such rule or action. This action may not be challenged later in proceedings to enforce its requirements. (See section 307(b)(2).)

List of Subjects in 40 CFR Part 52

Environmental protection, Air pollution control, Incorporation by reference, Intergovernmental relations, Nitrogen dioxide, Ozone, Particulate matter, Reporting and recordkeeping requirements, Volatile organic compounds.

Dated: June 5, 2013.

Judith A. Enck,

Regional Administrator, Region 2.

Part 52, chapter I, title 40 of the Code of Federal Regulations is amended as follows:

PART 52—[AMENDED]

■ 1. The authority citation for part 52 continues to read as follows:

Authority: 42 U.S.C. 7401 *et seq.*

Subpart FF—New Jersey

§ 52.1574 [Removed and Reserved]

■ 2. Section 52.1574 is removed and reserved.

§ 52.1575 [Removed and Reserved]

■ 3. Section 52.1575 is removed and reserved.

■ 4. Section 52.1586 is added to read as follows:

§ 52.1586 Section 110(a)(2) infrastructure requirements.

(a) *1997 8-hour ozone and the 1997 and 2006 $PM_{2.5}$* NAAQS. (1) *Approval.* In a February 25, 2008 submittal and supplemented on January 15, 2010, New Jersey certified that the State has satisfied the Clean Air Act (CAA) infrastructure requirements of section 110(a)(2) for the 1997 8-hour ozone and the 1997 and 2006 $PM_{2.5}$ NAAQS. These submittals satisfy the 1997 8-hour ozone and the 1997 and 2006 $PM_{2.5}$ NAAQS requirements of CAA sections 110(a)(2)(A), (B), (C) (enforcement program only), (D)(i)(II) prong 4 (visibility), (E)(i), (F), (H), (J) (consultation and public notification only), (K), (L), and (M).

(2) *Disapproval.* Submittal from New Jersey dated February 25, 2008 and supplement dated January 15, 2010 to address the CAA infrastructure requirements for the 1997 8-hour ozone and the 1997 and 2006 $PM_{2.5}$ NAAQS are disapproved for the following sections 110(a)(2)(C) (PSD program only), (D)(i)(II) (PSD program only), (D)(ii), and (J) (PSD program only). These requirements are being addressed by 40 CFR 52.1603 which has been delegated to New Jersey to implement.

(3) *Conditional approval.* Submittal from New Jersey dated February 25, 2008 and supplement dated January 15, 2010 to address the CAA infrastructure requirements for the 1997 8-hour ozone and the 1997 and 2006 $PM_{2.5}$ NAAQS are conditionally approved for the following sections 110(a)(2)(E)(ii) (conflict of interest provisions), (E)(iii) (delegations), and for the 1997 8-hour ozone element section 110(a)(2)(G)(emergency powers). This conditional approval is contingent upon New Jersey taking actions to meet requirements of these elements within one year of conditional approval, as committed to in a letter from the State to EPA Region 2 dated May 2, 2013.

(b) [Reserved]

[FR Doc. 2013–14071 Filed 6–13–13; 8:45 am]

BILLING CODE 6560–50–P

ENVIRONMENTAL PROTECTION AGENCY

40 CFR Part 271

[EPA–R04–RCRA–2012–0173; FRL–9823–1]

North Carolina: Final Authorization of State Hazardous Waste Management Program Revisions

AGENCY: Environmental Protection Agency (EPA).

ACTION: Immediate Final Rule.

SUMMARY: North Carolina has applied to EPA for final authorization of changes to its hazardous waste program under the Resource Conservation and Recovery Act (RCRA). EPA has determined that these changes satisfy all requirements needed to qualify for final authorization, and is authorizing the State's changes through this immediate final rule. In the ''Proposed Rules'' section of today's **Federal Register**, EPA is also publishing a separate notice that serves as the proposal to authorize these changes. EPA believes this action is not controversial and does not expect comments that oppose it. Unless EPA receives written comments that oppose this authorization during the comment period, the decision to authorize North Carolina's changes to its hazardous waste program will take effect. If EPA receives comments that oppose this action, EPA will publish a notice in the **Federal Register** withdrawing today's immediate final rule before it takes effect, and the separate notice published in today's ''Proposed Rules'' section of this **Federal Register** will serve as the proposal to authorize the changes.

DATES: This final authorization will become effective on August 13, 2013 unless EPA receives adverse written comment by July 15, 2013. If EPA receives such comment, EPA will publish a timely withdrawal of this immediate final rule in the **Federal Register** and inform the public that this authorization will not take effect.

ADDRESSES: Submit your comments, identified by Docket ID No. EPA–R04–RCRA–2012–0173, by one of the following methods:

- Federal eRulemaking Portal: *http://www.regulations.gov:* Follow the on-line instructions for submitting comments.
- Email: *gleaton.gwen@epa.gov.*
- Fax: (404) 562–9964 (prior to faxing, please notify the EPA contact listed below).
- Mail: Send written comments to Gwendolyn Gleaton, Permits and State Programs Section, RCRA Programs and Materials Management Branch, RCRA Division, U.S. Environmental Protection Agency, Atlanta Federal Center, 61 Forsyth Street SW., Atlanta, Georgia 30303–8960.
- Hand Delivery or Courier: Deliver your comments to Gwendolyn Gleaton, Permits and State Programs Section, RCRA Programs and Materials Management Branch, RCRA Division, U.S. Environmental Protection Agency, Atlanta Federal Center, 61 Forsyth Street SW., Atlanta, Georgia 30303–8960.

Instructions: EPA must receive your comments by July 15, 2013. Please refer to Docket Number EPA–R04–RCRA–2012–0173. Do not submit information that you consider to be confidential business information or otherwise protected through *www.regulations.gov* or email. The *www.regulations.gov* Web site is an ''anonymous access'' system, which means EPA will not know your identity or contact information unless you provide it in the body of your comment. If you send an email comment directly to EPA without going through *www.regulations.gov,* your email address will be automatically captured and included as part of the comment that is placed in the public docket and made publicly available on the Internet. If you submit an electronic comment, EPA recommends that you include your name and other contact information in the body of your comment and with any disk or CD–ROM you submit. If EPA cannot read your comment due to technical difficulties and cannot contact you for clarification, EPA may not be able to consider your comment. Electronic files should avoid the use of special characters, any form of encryption, and be free of any defects or viruses.

You may view and copy North Carolina's application and associated publicly available materials from 8:00 a.m. to 4:00 p.m. at the following locations: EPA, Region 4, RCRA Division, Atlanta Federal Center, 61 Forsyth Street SW., Atlanta, Georgia 30303–8960; telephone number: (404) 562–8500; and the North Carolina Department of Environment and Natural Resources, 217 West Jones Street, Raleigh, North Carolina 27603; telephone number: (929) 707–8219. Interested persons wanting to examine these documents should make an appointment with the office at least a week in advance.

FOR FURTHER INFORMATION CONTACT: Gwendolyn Gleaton, Permits and State Programs Section, RCRA Programs and Materials Management Branch, RCRA Division, U.S. Environmental Protection Agency, Atlanta Federal Center, 61 Forsyth Street SW., Atlanta, Georgia 30303–8960; telephone number: (404) 562–8500; fax number: (404) 562–9964; email address: *gleaton.gwen@epa.gov.*

SUPPLEMENTARY INFORMATION:

A. Why are revisions to State programs necessary?

States which have received final authorization from EPA under RCRA section 3006(b), 42 U.S.C. 6926(b), must maintain a hazardous waste program that is equivalent to, consistent with, and no less stringent than the Federal program. As the Federal program changes, States must change their programs and ask EPA to authorize the changes. Changes to State programs may be necessary when Federal or State statutory or regulatory authority is modified or when certain other changes occur. Most commonly, States must change their programs because of changes to EPA's regulations in 40 Code of Federal Regulations (CFR) parts 124, 260 through 268, 270, 273, and 279.

New Federal requirements and prohibitions imposed by Federal regulations that EPA promulgates pursuant to the Hazardous and Solid Waste Amendments of 1984 (HSWA) take effect in authorized States at the same time that they take effect in unauthorized States. Thus, EPA will implement those requirements and prohibitions in North Carolina, including the issuance of new permits implementing those requirements, until the State is granted authorization to do so.

B. What decisions has EPA made in this rule?

On June 8, 2009, North Carolina submitted a final complete program revision application, seeking authorization of changes to its hazardous waste program that correspond to certain Federal rules promulgated between July 1, 2004, and June 30, 2008 (also known as RCRA Clusters XV through XVIII). EPA concludes that North Carolina's application to revise its authorized program meets all of the statutory and regulatory requirements established by RCRA, as set forth in RCRA section 3006(b), 42 U.S.C. 6926(b), and 40 CFR Part 271. Therefore, EPA grants North Carolina final authorization to operate its hazardous waste program with the changes described in the authorization application, and as outlined below in Section G of this notice.

North Carolina has responsibility for permitting treatment, storage, and disposal facilities within its borders (except in Indian Country) and for carrying out the aspects of the RCRA program described in its revised program application, subject to the limitations of HSWA, as discussed above.

C. What is the effect of this authorization decision?

The effect of this decision is that the changes described in North Carolina's authorization application will become part of the authorized State hazardous waste program, and will therefore be federally enforceable. North Carolina will continue to have primary enforcement authority and responsibility for its State hazardous waste program. EPA retains its authorities under RCRA sections 3007, 3008, 3013, and 7003, including its authority to:

- Conduct inspections, and require monitoring, tests, analyses or reports;
- Enforce RCRA requirements, including authorized State program requirements, and suspend or revoke permits; and
- Take enforcement actions regardless of whether the State has taken its own actions.

This action does not impose additional requirements on the regulated community because the State regulations for which North Carolina is being authorized by today's action are already effective and enforceable requirements under State law, and are not changed by today's action.

D. Why wasn't there a Proposed Rule before today's rule?

Along with this immediate final rule, EPA is publishing a separate notice in the ''Proposed Rules'' section of today's **Federal Register** that serves as the proposal to authorize these State program changes. EPA did not publish a proposed rule before today because EPA views this as a routine program change and does not expect comments that oppose this approval. EPA is providing an opportunity for public comment now, as described in Section E of this notice.

E. What happens if EPA receives comments that oppose this action?

If EPA receives comments that oppose this authorization, EPA will withdraw today's immediate final rule by publishing a document in the **Federal Register** before the rule becomes effective. EPA will base any further decision on the authorization of the State program changes on the proposed rule mentioned in the previous section, after considering all comments received during the comment period, and will address all such comments in a later final rule. You may not have another opportunity to comment on these State program changes. If you want to comment on this authorization, you must do so at this time.

If EPA receives comments that oppose only the authorization of a particular change to the State hazardous waste program, EPA will withdraw that part of today's immediate final rule but the authorization of the program changes that the comments do not oppose will become effective on the date specified above. The **Federal Register** withdrawal document will specify which part of the authorization will become effective, and which part is being withdrawn.

F. What has North Carolina previously been authorized for?

North Carolina initially received final authorization on December 14, 1984, effective December 31, 1984 (49 FR 48694), to implement a hazardous waste management program. EPA granted authorization for changes to North Carolina's program on the following dates: March 25, 1986, effective April 8, 1986 (51 FR 10211); August 5, 1988, effective October 4, 1988 (53 FR 1988); February 9, 1989, effective April 10, 1989 (54 FR 6290); September 22, 1989, effective November 21, 1989 (54 FR 38993); January 18, 1991, effective March 19, 1991 (56 FR 1929); April 10, 1991, effective June 9, 1991 (56 FR 14474); July 19, 1991, effective September 17, 1991 (56 FR 33206); April 27, 1992, effective June 26, 1992 (57 FR 15254); December 12, 1992, effective February 16, 1993 (57 FR 59825); January 27, 1994, effective March 28, 1994 (59 FR 3792); April 4, 1994, effective June 3, 1994 (59 FR 15633); June 23, 1994, effective August 22, 1994 (59 FR 32378); November 10, 1994, effective January 9, 1995 (59 FR 56000); September 27, 1995, effective November 27, 1995 (60 FR 49800); April 25, 1996, effective June 24, 1996 (61 FR 18284); October 23, 1998, effective December 22, 1998 (63 FR 56834); August 25, 1999, effective October 25, 1999 (64 FR 46298); February 28, 2002, effective April 29, 2002 (67 FR 9219); December 14, 2004, effective February 14, 2005 (69 FR 74444); March 23, 2005, effective May 23, 2005 (70 FR 14556); and February 7, 2011, effective April 8, 2011 (76 FR 6561).

G. What changes is EPA authorizing with this action?

On June 8, 2009, North Carolina submitted a final complete program revision application, seeking authorization of its changes in accordance with 40 CFR 271.21. EPA now makes an immediate final decision, subject to receipt of written comments that oppose this action, that North Carolina's hazardous waste program revisions are equivalent to, consistent with, and no less stringent than the Federal program, and therefore satisfy all of the requirements necessary to qualify for final authorization. Therefore, EPA grants North Carolina final authorization for the following program changes:

Description of Federal requirement	**Federal Register** date and page	Analogous state authority [1]
208—Methods Innovation Rule and SW–846 Final Update IIIB & Correction.	70 FR 34538 06/14/05 70 FR 44150 08/01/05	15A NCAC 13A .0101(e); 15A NCAC 13A .0103(c); 15A NCAC 13A .0106(a) and (c)–(f); 15A NCAC 13A .0109(k), (o), (v)–(w) and (aa); 15A NCAC 13A .0110(j), (n), (s)–(u); 15A NCAC 13A .0111(d) and (g); 15A NCAC 13A .0112(c) and (e); 15A NCAC 13A .0113(b) and (i); and 15A NCAC 13A .0118(b) and (e)–(g).
209—Universal Waste Rule: Specific Provisions for Mercury Containing Equipment.	70 FR 45508 08/05/05	15A NCAC 13A .0102(b); 15A NCAC 13A .0106(a); 15A NCAC 13A .0109(b); 15A NCAC 13A .0110(a); 15A NCAC 13A .0112(a); 15A NCAC 13A .0113(a); and 15A NCAC 13A .0119(a)–(c).
211—Revision of Wastewater Treatment Exemptions for Hazardous Waste Mixtures (''Headworks Exemptions'').	70 FR 57769 10/04/05	15A NCAC 13A .0106(a).
212—NESHAP: Final Standards for Hazardous Waste Combusters.	70 FR 59402 10/12/05	15A NCAC 13A .0101(e); 15A NCAC 13A .0109(q); 15A NCAC 13A .0110(o); 15A NCAC 13A .0111(d); and 15A NCAC 13A .0113(a)–(b), (f)–(g), (i) and (k).

Description of Federal requirement	**Federal Register** date and page	Analogous state authority [1]
213—Burden Reduction Initiative	71 FR 16862 04/04/06	15A NCAC 13A .0102(b); 15A NCAC 13A .0103(c); 15A NCAC 13A .0106(a); 15A NCAC 13A .0109(c), (e)–(k), (m)–(o), (q), (s)–(t), (w) and (y); 15A NCAC 13A .0110(b), (d)–(n), (r), (t) and (v); 15A NCAC 13A .0111(d); 15A NCAC 13A .0112(a); and 15A NCAC 13A .0113(b) and (g).
214—Hazardous Waste and Used Oil; Corrections to Errors in the Code of Federal Regulations.	71 FR 40254 07/14/06	15A NCAC 13A .0102(b); 15A NCAC 13A .0103(c); 15A NCAC 13A .0106(a) and (c)–(f); 15A NCAC 13A .0107(c), (e) and (g)–(h); 15A NCAC 13A .0109(b)–(c), (g)–(o), (q), (s)–(y) and (aa); 15A NCAC 13A .0110(a)–(b), (d), (f)–(n), (q)–(v) and (x); 15A NCAC 13A .0111(b)–(d) and (f)–(g); 15A NCAC 13A .0112(a) and (c)–(e); 15A NCAC 13A .0113(a)–(b), (f)–(g) and (j); 15A NCAC 13A .0118(a)–(b) and (e)–(h); and 15A NCAC 13A .0119(a)–(c).
216—Exclusion of Oil Bearing Secondary Materials Processed in a Gasification System to Produce Synthesis Gas.	73 FR 57 01/02/08	15A NCAC 13A .0102(b) and 15A NCAC 13A .0106(a).
217—NESHAP: Final Standards for Hazardous Waste Combustors (Phase I Final Replacement Standards and Phase II) Amendments.	73 FR 18970 04/08/08	15A NCAC 13A .0109(q) and 15A NCAC 13A .0111(d).
218—F019 Exemption for Wastewater Treatment Sludges from Auto Manufacturing Zinc Phosphating Processes.	73 FR 31756 06/04/08	15A NCAC 13A .0106(d).

[1] The North Carolina provisions are from the North Carolina Hazardous Waste Management Rules, 15A NCAC 13A, effective as of August 1, 2008.

H. Where are the revised state rules different from the Federal rules?

There are no State requirements in this program revision considered to be more stringent or broader in scope than the Federal requirements.

I. Who handles permits after the authorization takes effect?

North Carolina will issue permits for all the provisions for which it is authorized and will administer the permits it issues. EPA will continue to administer any RCRA hazardous waste permits or portions of permits which EPA issued prior to the effective date of this authorization until they expire or are terminated. EPA will not issue any more permits or new portions of permits for the provisions listed in the Table above after the effective date of this authorization. EPA will continue to implement and issue permits for HSWA requirements for which North Carolina is not authorized.

J. How does today's action affect Indian country (18 U.S.C. 1151) in North Carolina?

North Carolina is not authorized to carry out its hazardous waste program in Indian Country within the State, which includes the Eastern Band of Cherokee Indians. EPA will continue to implement and administer the RCRA program in these lands.

K. What is codification and is EPA codifying North Carolina's hazardous waste program as authorized in this rule?

Codification is the process of placing the State's statutes and regulations that comprise the State's authorized hazardous waste program into the Code of Federal Regulations. EPA does this by referencing the authorized State rules in 40 CFR part 272. EPA is not codifying the authorization of North Carolina's changes at this time. However, EPA reserves the amendment of 40 CFR part 272, subpart II, for the authorization of North Carolina's program changes at a later date.

L. Administrative Requirements

The Office of Management and Budget has exempted this action from the requirements of Executive Order 12866 (58 FR 51735, October 4, 1993), and therefore this action is not subject to review by OMB. This action authorizes State requirements for the purpose of RCRA 3006 and imposes no additional requirements beyond those imposed by State law. Accordingly, I certify that this action will not have a significant economic impact on a substantial number of small entities under the Regulatory Flexibility Act (5 U.S.C. 601 *et seq.*). Because this action authorizes pre-existing requirements under State law and does not impose any additional enforceable duty beyond that required by State law, it does not contain any unfunded mandate or significantly or uniquely affect small governments, as described in the Unfunded Mandates Reform Act of 1995 (Pub. L. 104–4). For the same reason, this action also does not significantly or uniquely affect the communities of Tribal governments, as specified by Executive Order 13175 (65 FR 67249, November 9, 2000). This action will not have substantial direct effects on the States, on the relationship between the national government and the States, or on the distribution of power and responsibilities among the various levels of government, as specified in Executive Order 13132 (64 FR 43255, August 10, 1999), because it merely authorizes State requirements as part of the State RCRA hazardous waste program without altering the relationship or the distribution of power and responsibilities established by RCRA. This action also is not subject to Executive Order 13045 (62 FR 19885, April 23, 1997), because it is not economically significant and it does not make decisions based on environmental health or safety risks. This rule is not subject to Executive Order 13211, ''Actions Concerning Regulations That Significantly Affect Energy Supply, Distribution, or Use'' (66 FR 28355, May 22, 2001) because it is not a significant regulatory action under Executive Order 12866.

Under RCRA 3006(b), EPA grants a State's application for authorization as long as the State meets the criteria required by RCRA. It would thus be inconsistent with applicable law for EPA, when it reviews a State authorization application, to require the use of any particular voluntary consensus standard in place of another

standard that otherwise satisfies the requirements of RCRA. Thus, the requirements of section 12(d) of the National Technology Transfer and Advancement Act of 1995 (15 U.S.C. 272 note) do not apply. As required by section 3 of Executive Order 12988 (61 FR 4729, February 7, 1996), in issuing this rule, EPA has taken the necessary steps to eliminate drafting errors and ambiguity, minimize potential litigation, and provide a clear legal standard for affected conduct. EPA has complied with Executive Order 12630 (53 FR 8859, March 15, 1988) by examining the takings implications of the rule in accordance with the ''Attorney General's Supplemental Guidelines for the Evaluation of Risk and Avoidance of Unanticipated Takings'' issued under the executive order. This rule does not impose an information collection burden under the provisions of the Paperwork Reduction Act of 1995, 44 U.S.C. 3501 *et seq.*

The Congressional Review Act, 5 U.S.C. 801 *et seq.,* as added by the Small Business Regulatory Enforcement Fairness Act of 1996, generally provides that before a rule may take effect, the agency promulgating the rule must submit a rule report, which includes a copy of the rule, to each House of the Congress and to the Comptroller General of the United States. EPA will submit a report containing this document and other required information to the U.S. Senate, the U.S. House of Representatives, and the Comptroller General of the United States prior to publication in the **Federal Register**. A major rule cannot take effect until 60 days after it is published in the **Federal Register**. This action is not a ''major rule'' as defined by 5 U.S.C. 804(2). This action will be effective August 13, 2013, unless objections to this authorization are received.

List of Subjects in 40 CFR Part 271

Environmental protection, Administrative practice and procedure, Confidential business information, Hazardous waste, Hazardous waste transportation, Indian lands, Intergovernmental relations, Penalties, Reporting and recordkeeping requirements.

Authority: This action is issued under the authority of sections 2002(a), 3006, and 7004(b) of the Solid Waste Disposal Act, as amended, 42 U.S.C. 6912(a), 6926, and 6974(b).

Dated: May 16, 2013.

Gwendolyn Keyes Fleming,

Regional Administrator, Region 4.

[FR Doc. 2013–13850 Filed 6–13–13; 8:45 am]

BILLING CODE 6560–50–P

DEPARTMENT OF TRANSPORTATION

Maritime Administration

46 CFR Part 221

[Docket No. MARAD–2013–0021]

RIN 2133–AB81

Retrospective Review Under E.O. 13563: Regulated Transactions Involving Documented Vessels and Other Maritime Interests

AGENCY: Maritime Administration, Department of Transportation.

ACTION: Final rule.

SUMMARY: In accordance with Executive Order 13563, ''Improving Regulation and Regulatory Review,'' the Maritime Administration (MarAd) is evaluating the continued accuracy of its rules and determining whether they effectively address current issues and provide the regulated public with necessary guidance. As part of this review, MarAd has decided to issue this final rule to correct numerous citations in accordance with the codification of Title 46 of the United States Code, update relevant agency contacts, update citations, and revise portions of the text. This rulemaking will have no substantive effect on the regulated public.

DATES: This rule is effective July 15, 2013.

FOR FURTHER INFORMATION CONTACT: You may contact T. Mitchell Hudson, Jr., Attorney-Advisor, Office of Chief Counsel, at (202) 366–9373. You may send mail to Mr. Hudson at Office of Chief Counsel, MAR–222, Maritime Administration, 1200 New Jersey Avenue SE., Washington, DC 20590–0001. You may send electronic mail to *Mitch.Hudson@dot.gov.*

SUPPLEMENTARY INFORMATION:

Background

On January 18, 2011, President Obama issued Executive Order 13563, which outlined a plan to improve regulation and regulatory review (76 FR 3821, 1/21/11). Executive Order 13563 reaffirms and builds upon governing principles of contemporary regulatory review, including Executive Order 12866, ''Regulatory Planning and Review,'' (58 FR 51735, 10/4/1993), by requiring Federal agencies to design cost-effective, evidence-based regulations that are compatible with economic growth, job creation, and competitiveness. The President's plan recognizes that these principles should not only guide the Federal government's approach to new regulations, but to existing ones as well. To that end, Executive Order 13563 requires agencies to promote retrospective analysis of rules that may be outmoded, ineffective, insufficient, or excessively burdensome.

Accordingly, the Maritime Administration identified its regulations governing transactions involving documented vessels and other maritime interests for improvement consistent with the President's Order. The regulations were deemed to provide out-of-date information and citations. By updating agency regulations, this rulemaking will make the regulatory program more effective and less burdensome on the public.

As authorized by Subtitle III of 46 U.S.C. Chapters 301 and 313, and Subtitle V of 46 U.S.C. Chapter 561, and delegated under 49 CFR 1.93, MarAd may approve transactions involving the transfer of interest in or control of Documented Vessels owned by Citizens of the United States to Noncitizens or approve a Documented Vessel to registry or operation under the authority of a foreign country or for scrapping in a foreign country. In addition, under Part 221, MarAd may assess civil penalties arising under commercial instruments and maritime liens in time of war or national emergency. Part 221 is now being updated to include technical changes such as MarAd's address at 1200 New Jersey Avenue and to include corrections to statutory references, some of which were made obsolete as the result of the codification of the Appendix to Title 46 of the United States Code.

Rulemaking Analysis and Notices

Executive Orders 12866 (Regulatory Planning and Review), 13563 (Improving Regulation and Regulatory Review) and DOT Regulatory Policies and Procedures

Under E.O. 12866 (58 FR 51735, October 4, 1993), supplemented by E.O. 13563 (76 FR 3821, January 18, 2011) and DOT policies and procedures, MarAd must determine whether a regulatory action is ''significant,'' and therefore subject to Office of Management and Budget (''OMB'') review and the requirements of the E.O. The Order defines ''significant regulatory action'' as one likely to result in a rule that may: (1) Have an annual effect on the economy of $100 million or more or adversely affect in a material way the economy, a sector of the economy, productivity, competition, jobs, the environment, public health or safety, or State, local, or tribal government or communities; (2) Create

a serious inconsistency or otherwise interfere with an action taken or planned by another Agency; (3) Materially alter the budgetary impact of entitlements, grants, user fees, or loan programs or the rights and obligations of recipients thereof; and (4) Raise novel legal or policy issues arising out of legal mandates, the President's priorities, or the principles set forth in the E.O.

MarAd has determined that this final rule is not considered a significant regulatory action under section 3(f) of Executive Order 12866 and, therefore, it was not reviewed by the Office of Management and Budget. This final rule will not result in any of the effects contemplated under E.O. 12866 or E.O. 13563. It also is not considered a major rule for purposes of Congressional review under Pub. L. 104–121. The rule is also not significant under the Regulatory Policies and Procedures of the Department of Transportation (44 FR 11034, February 26, 1979). The costs and overall economic impact of this rulemaking do not require further analysis.

Executive Order 13132 (Federalism)

We analyzed this rulemaking in accordance with the principles and criteria contained in Executive Order 13132 (''Federalism'') and have determined that it does not have sufficient Federalism implications to warrant the preparation of a Federalism summary impact statement. This rule has no substantial effect on the States, or on the current Federal-State relationship, or on the current distribution of power and responsibilities among the various local officials. Nothing in this document preempts any State law or regulation. Therefore, MarAd did not consult with State and local officials because it was not necessary.

Executive Order 13175 (Consultation and Coordination With Indian Tribal Governments)

MarAd does not believe that this final rule will significantly or uniquely affect the communities of Indian tribal governments when analyzed under the principles and criteria contained in Executive Order 13175 (Consultation and Coordination with Indian Tribal Governments). Therefore, the funding and consultation requirements of this Executive Order do not apply.

Executive Order 12372 (Intergovernmental Review)

The regulations implementing Executive Order 12372 regarding intergovernmental consultation on Federal programs and activities do not apply to this rule.

Regulatory Flexibility Act

The Regulatory Flexibility Act of 1980 requires MarAd to assess whether this rule would have a significant economic impact on a substantial number of small entities and to minimize any adverse impact. MarAd certifies that this rule will not have a significant economic impact on a substantial number of small entities.

Environmental Assessment

We have analyzed this final rule for purposes of compliance with the National Environmental Policy Act of 1969 (42 U.S.C. 4321 *et seq.)* and have concluded that under the categorical exclusions provision in section 4.05 of Maritime Administrative Order (MAO) 600–1, ''Procedures for Considering Environmental Impacts,'' 50 FR 11606 (March 22, 1985), neither the preparation of an Environmental Assessment, an Environmental Impact Statement, nor a Finding of No Significant Impact for this rulemaking is required. This rulemaking has no environmental impact.

Executive Order 13211 (Energy Supply, Distribution, or Use)

MarAd has determined that the final rule will not significantly affect energy supply, distribution, or use. Therefore, no Statement of Energy Effects is required.

Executive Order 13045 (Protection of Children)

Executive Order 13045, Protection of Children from Environmental Health Risks and Safety Risks, requires agencies issuing ''economically significant'' rules that involve an environmental health or safety risk that may disproportionately affect children, to include an evaluation of the regulation's environmental health and safety effects on children. As discussed previously, this final rule is not economically significant, and it will cause no environmental or health risk that disproportionately affects children.

Executive Order 12988 (Civil Justice Reform)

This action meets applicable standards in sections 3(a) and 3(b)(2) of E.O. 12988, Civil Justice Reform, to minimize litigation, eliminate ambiguity, and reduce burden.

Executive Order 12630 (Taking of Private Property)

This rule will not effect a taking of private property or otherwise have taking implications under Executive Order 12630, Governmental Actions and Interference with Constitutionally Protected Property Rights.

National Technology Transfer and Advancement Act

The National Technology Transfer and Advancement Act (15 U.S.C. 272 note) requires Federal agencies adopting Government technical standards to consider whether voluntary consensus standards are available. If the Agency chooses to adopt its own standards in place of existing voluntary consensus standards, it must explain its decision in a separate statement to OMB. MarAd determined that there are no voluntary national consensus standards related to vessel registry transfer requests or other maritime interests under this regulation.

International Trade Impact Assessment

This rule is not expected to contain standards-related activities that create unnecessary obstacles to the foreign commerce of the United States.

Privacy Impact Assessment

Section 522(a)(5) of the Transportation, Treasury, Independent Agencies, and General Government Appropriations Act, 2005 (Pub. L. 108–447, div. H, 118 Stat. 2809 at 3268) requires the Department of Transportation and certain other Federal agencies to conduct a privacy impact assessment of each final rule that will affect the privacy of individuals. Claims submitted under this rule will be treated the same as all legal claims received by MarAd. The processing and treatment of any claim within the scope of this rulemaking by MarAd shall comply with all legal, regulatory, and policy requirements regarding privacy.

Paperwork Reduction Act

Under the Paperwork Reduction Act of 1995 (PRA) (44 U.S.C. 3501 *et seq.*), Federal agencies must obtain approval from OMB for each collection of information they conduct, sponsor, or require through regulations. This final rule provides regulatory clarification to those seeking to transfer their vessels to noncitizens, or to registry or operation under the authority of a foreign country as well as addressing other maritime interests. This rulemaking contains no new or amended information collection or recordkeeping requirements that have been approved or require approval by the Office of Management and Budget.

Unfunded Mandates Reform Act of 1995

The Unfunded Mandates Reform Act of 1995 requires Agencies to evaluate whether an Agency action would result

in the expenditure by State, local, and tribal governments, in the aggregate, or by the private sector, of $141.3 million or more (as adjusted for inflation) in any one year, and if so, to take steps to minimize these unfunded mandates. This final rule does not impose unfunded mandates under the Unfunded Mandates Reform Act of 1995. It does not result in costs of $141.3 million or more to either State, local, or tribal governments, in the aggregate, or to the private sector, and is the least burdensome alternative that achieves the objectives of the rule.

Regulation Identifier Number (RIN)

A regulation identifier number (RIN) is assigned to each regulatory action listed in the Unified Agenda of Federal Regulations. The Regulatory Information Service Center publishes the Unified Agenda in April and October of each year. The RIN number contained in the heading of this document can be used to cross-reference this action with the Unified Agenda.

List of Subjects in 46 CFR Part 221

Administrative practice and procedure, Maritime carriers, Mortgages, Penalties, Reporting and recordkeeping requirements, Trusts and trustees.

Accordingly, MarAd amends 46 CFR part 221 as follows:

PART 221—REGULATED TRANSACTIONS INVOLVING DOCUMENTED VESSELS AND OTHER MARITIME INTERESTS

■ 1. The authority citation for part 221 is revised to read as follows:

Authority: 46 U.S.C. chs. 301, 313, and 561; 49 CFR 1.93.

§ 221.1 [Amended]

■ 2. In § 221.1:
■ a. In paragraph (a)(1), remove ''46 App. U.S.C. 808'' and add, in its place, ''46 U.S.C. 56101 and 56103''.
■ b. In paragraph (a)(2), remove ''46 App. U.S.C. 835'' and add, in its place, ''46 U.S.C. 56102''.

■ 3. In § 221.3:
■ a. In paragraph (a), remove ''46 App. U.S.C. 883–1(a)–(e)'' and add, in its place, ''46 U.S.C. 12118''.
■ b. In paragraph (c) introductory text, remove ''46 App. U.S.C. 803'' and add, in its place, ''46 U.S.C. 50502''.
■ c. In paragraph (d)(5), remove ''46 App. U.S.C. 802'' and add, in its place, ''46 U.S.C. 50501''.
■ d. Revise paragraph (u).
The revision reads as follows:

§ 221.3 Definitions.

* * * * *

(u) *Vessel Transfer Officer* means the Maritime Administration's Vessel Transfer and Disposal Officer, whose address is MAR–630, Maritime Administration, United States Department of Transportation, 1200 New Jersey Ave. SE., Washington, DC 20590, or that person's delegate.

§ 221.5 [Amended]

■ 4. In § 221.5(a), remove ''sections 9 or 37 of the Shipping Act of 1916 (46 App. U.S.C. 808 and 837)'' and add, in its place, ''46 U.S.C. 56101 and 56103''.

§ 221.11 [Amended]

■ 5. In § 221.11(a) introductory text, remove ''12106(e)'' and add, in its place, ''12119''.

§ 221.13 [Amended]

■ 6. In § 221.13(a), remove ''46 App. U.S.C. 808(c)(1)'' and add, in its place, ''46 U.S.C. 56101''.
■ 7. In § 221.15:
■ a. In paragraph (a)(3), remove ''section 37 of the Shipping Act, 1916, as amended (46 App. U.S.C. 835)'' and add, in its place, ''46 U.S.C. 56102''.
■ b. In paragraph (c)(2), remove ''section 902 of the Merchant Marine Act, 1936, as amended (46 App. U.S.C. 1242)'' and add, in its place, ''46 U.S.C. chapters 563 and 565''.
■ c. In paragraph (c)(4), revise the second sentence.
■ d. In paragraph (f)(2), remove ''App. U.S.C. 808, 835 and 839,'' and add, in its place ''U.S.C. chapter 561''.
The revision reads as follows:

§ 221.15 Approval for transfer of registry or operation under authority of a foreign country or for scrapping in a foreign country.

* * * * *

(c) * * *

(4) * * * Pursuant to 46 U.S.C. 56105, the Maritime Administrator may remit forfeiture of the vessel upon such conditions as may be required under the circumstances of the particular case, including the payment of a sum in lieu of forfeiture, and execution of a new agreement containing substantially the same conditions set forth above and such others as the Maritime Administrator may deem appropriate and which will be applicable to the vessel for the remaining period of the original agreement. * * *

* * * * *

■ 8. In § 221.61, revise the introductory text to read as follows:

§ 221.61 Purpose.

This subpart describes procedures for the administration of civil penalties that the Maritime Administration may assess under 46 U.S.C. 31309 and 31330, and 46 U.S.C. 56101, pursuant to 49 U.S.C. 336.

* * * * *

By Order of the Maritime Administrator.

Julie Agarwal,

Secretary, Maritime Administration.

[FR Doc. 2013–13992 Filed 6–13–13; 8:45 am]

BILLING CODE 4910–81–P

DEPARTMENT OF COMMERCE

National Oceanic and Atmospheric Administration

50 CFR Part 679

[Docket No. 121018563–3148–02]

RIN 0648–XC724

Fisheries of the Exclusive Economic Zone Off Alaska; Atka Mackerel in the Bering Sea and Aleutian Islands Management Area

AGENCY: National Marine Fisheries Service (NMFS), National Oceanic and Atmospheric Administration (NOAA), Commerce.

ACTION: Temporary rule; closure.

SUMMARY: NMFS is prohibiting directed fishing for Atka mackerel in the Central Aleutian district (CAI) of the Bering Sea and Aleutian Islands management area (BSAI) by vessels participating in the BSAI trawl limited access fishery. This action is necessary to prevent exceeding the 2013 total allowable catch (TAC) of Atka mackerel in this area allocated to vessels participating in the BSAI trawl limited access fishery.

DATES: Effective 1200 hrs, Alaska local time (A.l.t.), June 11, 2013, through 2400 hrs, A.l.t., December 31, 2013.

FOR FURTHER INFORMATION CONTACT: Steve Whitney, 907–586–7269.

SUPPLEMENTARY INFORMATION: NMFS manages the groundfish fishery in the BSAI exclusive economic zone according to the Fishery Management Plan for Groundfish of the Bering Sea and Aleutian Islands Management Area (FMP) prepared by the North Pacific Fishery Management Council under authority of the Magnuson-Stevens Fishery Conservation and Management Act. Regulations governing fishing by U.S. vessels in accordance with the FMP appear at subpart H of 50 CFR parts 600 and 679.

The 2013 TAC of Atka mackerel, in the CAI, allocated to vessels participating in the BSAI trawl limited access fishery was established as a directed fishing allowance of 664 metric tons by the final 2013 and 2014 harvest

specifications for groundfish in the BSAI (78 FR 13813, March 1, 2013).

In accordance with § 679.20(d)(1)(iii), the Regional Administrator finds that this directed fishing allowance has been reached. Consequently, NMFS is prohibiting directed fishing for Atka mackerel in the CAI by vessels participating in the BSAI trawl limited access fishery.

After the effective dates of this closure, the maximum retainable amounts at § 679.20(e) and (f) apply at any time during a trip.

Classification

This action responds to the best available information recently obtained from the fishery. The Acting Assistant Administrator for Fisheries, NOAA, (AA) finds good cause to waive the requirement to provide prior notice and opportunity for public comment pursuant to the authority set forth at 5 U.S.C. 553(b)(B) as such a requirement is impracticable and contrary to the public interest. This requirement is impracticable and contrary to the public interest as it would prevent NMFS from responding to the most recent fisheries data in a timely fashion and would delay the closure of the Atka mackerel directed fishery in the CAI for vessels participating in the BSAI trawl limited access fishery. NMFS was unable to publish a notice providing time for public comment because the most recent, relevant data only became available as of June 10, 2013. The AA also finds good cause to waive the 30-day delay in the effective date of this action under 5 U.S.C. 553(d)(3). This finding is based upon the reasons provided above for waiver of prior notice and opportunity for public comment.

This action is required by § 679.20 and is exempt from review under Executive Order 12866.

Authority: 16 U.S.C. 1801 *et seq.*

Dated: June 11, 2013.

James P. Burgess,

Acting Deputy Director, Office of Sustainable Fisheries, National Marine Fisheries Service.

[FR Doc. 2013–14185 Filed 6–11–13; 4:15 pm]

BILLING CODE 3510–22–P

Proposed Rules

Federal Register
Vol. 78, No. 115
Friday, June 14, 2013

This section of the FEDERAL REGISTER contains notices to the public of the proposed issuance of rules and regulations. The purpose of these notices is to give interested persons an opportunity to participate in the rule making prior to the adoption of the final rules.

DEPARTMENT OF TRANSPORTATION

Federal Aviation Administration

14 CFR Part 39

[Docket No. FAA–2013–0486; Directorate Identifier 2010–SW–031–AD]

RIN 2120–AA64

Airworthiness Directives; MD Helicopters, Inc. (MDHI), Helicopters

AGENCY: Federal Aviation Administration, DOT.

ACTION: Notice of proposed rulemaking (NPRM).

SUMMARY: We propose to adopt a new airworthiness directive (AD) for the MDHI Model MD900 helicopters with certain main rotor blade (MRB) retention bolts (bolts) installed. This proposed AD would require a daily check of the position of each bolt and would also require a daily check and a repetitive inspection for a gap in each bolt. The proposed AD would also require, if necessary, removing and inspecting the bolt for a crack and replacing any cracked bolt with an airworthy bolt. This proposed AD is prompted by multiple reports of in-service bolt failures. The proposed actions are intended to prevent failure of a bolt, which could lead to loss of MRB structural integrity and subsequent loss of control of the helicopter.

DATES: We must receive comments on this proposed AD by August 13, 2013.

ADDRESSES: You may send comments by any of the following methods:

- *Federal eRulemaking Docket:* Go to *http://www.regulations.gov.* Follow the online instructions for sending your comments electronically.
- *Fax:* 202–493–2251.
- *Mail:* Send comments to the U.S. Department of Transportation, Docket Operations, M–30, West Building Ground Floor, Room W12–140, 1200 New Jersey Avenue SE., Washington, DC 20590–0001.
- *Hand Delivery:* Deliver to the ''Mail'' address between 9 a.m. and 5 p.m., Monday through Friday, except Federal holidays.

Examining the AD Docket

You may examine the AD docket on the Internet at *http://www.regulations.gov* or in person at the Docket Operations Office between 9 a.m. and 5 p.m., Monday through Friday, except Federal holidays. The AD docket contains this proposed AD, the economic evaluation, any comments received, and other information. The street address for the Docket Operations Office (telephone 800–647–5527) is in the **ADDRESSES** section. Comments will be available in the AD docket shortly after receipt.

For service information identified in this proposed AD, contact MDHI, Attn: Customer Support Division, 4555 E. McDowell Rd., Mail Stop M615, Mesa, AZ 85215–9734, telephone (800) 388–3378, fax (480) 346–6813, or at *http://www.mdhelicopters.com.* You may review copies of the referenced service information at the FAA, Office of the Regional Counsel, Southwest Region, 2601 Meacham Blvd., Room 663, Fort Worth, Texas 76137.

FOR FURTHER INFORMATION CONTACT: Roger Durbin, Aerospace Engineer, FAA, Los Angeles Aircraft Certification Office, Airframe Branch, ANM–120L, 3960 Paramount Blvd., Lakewood, CA 90712, telephone (562) 627–5233, fax (562) 627–5210, email *roger.durbin@faa.gov.*

SUPPLEMENTARY INFORMATION:

Comments Invited

We invite you to participate in this rulemaking by submitting written comments, data, or views. We also invite comments relating to the economic, environmental, energy, or federalism impacts that might result from adopting the proposals in this document. The most helpful comments reference a specific portion of the proposal, explain the reason for any recommended change, and include supporting data. To ensure the docket does not contain duplicate comments, commenters should send only one copy of written comments, or if comments are filed electronically, commenters should submit only one time.

We will file in the docket all comments that we receive, as well as a report summarizing each substantive public contact with FAA personnel concerning this proposed rulemaking. Before acting on this proposal, we will consider all comments we receive on or before the closing date for comments. We will consider comments filed after the comment period has closed if it is possible to do so without incurring expense or delay. We may change this proposal in light of the comments we receive.

Discussion

We propose to adopt a new AD for MDHI Model MD900 helicopters with certain bolts installed. This proposed AD is prompted by multiple reports of in-service bolt failures, which could lead to loss of the MRB structural integrity and subsequent loss of control of the helicopter. Although these bolt failures have primarily occurred in the United Kingdom, it is possible that the failures affect MDHI Model 900 helicopters in the United States. This condition, if not detected, could lead to loss of MRB structural integrity and subsequent loss of control of the helicopter.

FAA's Determination

We are proposing this AD because we evaluated all known relevant information and determined that an unsafe condition exists and is likely to exist or develop on other products of the same type design.

Related Service Information

We have reviewed MDHI Alert Service Bulletin SB900–116R1, dated April 9, 2010 (ASB SB900–116R1), which supersedes ASB SB900–116, dated February 24, 2010 (ASB SB900–116).

ASB SB900–116 specifies a repetitive check of the blade retention bolts, part number (P/N) 900R3100001–103 and 900R3100001–105, for a gap and, depending on the outcome of the inspection, removing and inspecting the bolt for damage. The ASB also specifies a repetitive force check of each bolt, P/N 900R3100001–103, and a torque check of each bolt, P/N 900R3100001–105. Lastly, the ASB specifies a daily preflight check of each bolt to examine the position of the bolt and for a gap, and, if any bolt has moved up or down or if there was no gap, removing and inspecting the bolt.

Superseding ASB SB900–116R1 retains the same specifications as ASB SB90016, except that it revises the

interval for the bolt force and torque checks from 4–6 flight-hours to 8–10 flight-hours. ASB SB90016R1 also revises the change of force or torque from not more than 10 percent to not more than ±10 percent.

Proposed AD Requirements

The proposed AD would require:

- Before the first flight of each day, visually checking each bolt for failure and for a gap between the thrust washer and the retainer.
- An owner/operator (pilot) may perform these visual checks and must enter compliance into the helicopter maintenance records in accordance with 14 CFR 43.9(a)(1)–(4) and 91.417(a)(2)(v). A pilot may perform this check because it involves only a visual check for the position of the bolt and a check for a gap between the thrust washer and retainer and can be performed equally well by a pilot or mechanic. This authorization is an exception to our standard maintenance regulations.
- If there is any indication of bolt failure or if there is no gap between the thrust washer and retainer, before further flight, removing and inspecting the bolt for a crack and replacing any cracked bolt with an airworthy bolt.
- Within 300 hours time-in-service, and thereafter at intervals not to exceed 300 hours TIS, inspecting each bolt for a gap between the thrust washer and the retainer.
  - Determining if there is a missing O-ring and installing any missing O-ring.
  - If there is no gap between the thrust washer and retainer, before further flight, removing and inspecting the bolt for a crack and replacing any cracked bolt with an airworthy bolt.
  - If there is a gap between the thrust washer and retainer, measuring the gap in two locations with a feeler gage. If the gap is too large, removing and inspecting the bolt for a crack, before further flight; and then replacing any cracked bolt with an airworthy bolt.

Differences Between This Proposed AD and the Service Information

This proposed AD uses the term ''inspect'' when describing the action of inspecting a bolt for a crack and inspecting for a gap between the thrust washer and the retainer. The ASB uses the term ''check.''

Costs of Compliance

We estimate that this proposed AD would affect 29 helicopters in the U.S. registry. We estimate that operators may incur the following costs in order to comply with this AD: The average labor rate is $85 per work hour. It would take about .5 work hour to do a gap inspection of each bolt. It would take about 1 work hour to replace a cracked bolt and the required parts would cost $800 at a total cost per helicopter of $928.

Authority for This Rulemaking

Title 49 of the United States Code specifies the FAA's authority to issue rules on aviation safety. Subtitle I, section 106, describes the authority of the FAA Administrator. ''Subtitle VII: Aviation Programs,'' describes in more detail the scope of the Agency's authority.

We are issuing this rulemaking under the authority described in ''Subtitle VII, Part A, Subpart III, Section 44701: General requirements.'' Under that section, Congress charges the FAA with promoting safe flight of civil aircraft in air commerce by prescribing regulations for practices, methods, and procedures the Administrator finds necessary for safety in air commerce. This regulation is within the scope of that authority because it addresses an unsafe condition that is likely to exist or develop on products identified in this rulemaking action.

Regulatory Findings

We determined that this proposed AD would not have federalism implications under Executive Order 13132. This proposed AD would not have a substantial direct effect on the States, on the relationship between the national Government and the States, or on the distribution of power and responsibilities among the various levels of government.

For the reasons discussed, I certify this proposed regulation:

1. Is not a ''significant regulatory action'' under Executive Order 12866;
2. Is not a ''significant rule'' under the DOT Regulatory Policies and Procedures (44 FR 11034, February 26, 1979);
3. Will not affect intrastate aviation in Alaska to the extent that it justifies making a regulatory distinction; and
4. Will not have a significant economic impact, positive or negative, on a substantial number of small entities under the criteria of the Regulatory Flexibility Act.

We prepared an economic evaluation of the estimated costs to comply with this proposed AD and placed it in the AD docket.

List of Subjects in 14 CFR Part 39

Air transportation, Aircraft, Aviation safety, Incorporation by reference, Safety.

The Proposed Amendment

Accordingly, under the authority delegated to me by the Administrator, the FAA proposes to amend 14 CFR part 39 as follows:

PART 39—AIRWORTHINESS DIRECTIVES

■ 1. The authority citation for part 39 continues to read as follows:

Authority: 49 U.S.C. 106(g), 40113, 44701.

§ 39.13 [Amended]

■ 2. The FAA amends § 39.13 by adding the following new Airworthiness Directive (AD):

MD Helicopters, Inc. (MDHI): Docket No. FAA–2013–0486; Directorate Identifier 2010–SW–031–AD.

(a) Applicability

This AD applies to Model MD 900 helicopters with a main rotor blade retention bolt (bolt), part number (P/N) 900R3100001–103 or 900R3100001–105, installed; certificated in any category.

(b) Unsafe Condition

This AD defines the unsafe condition as bolt failure. This condition could result in loss of main rotor blade structural integrity and subsequent loss of control of the helicopter.

(c) Comments Due Date

We must receive comments by August 13, 2013.

(d) Compliance

You are responsible for performing each action required by this AD within the specified compliance time unless it has already been accomplished prior to that time.

(e) Required Actions

(1) Before the first flight of each day:

(i) Visually check each bolt for failure. Failure of a bolt may be indicated by movement of the bolt out of the bolt hole or by inconsistent extension of the bolt above or below the other bolts being inspected (a failed bolt migrates out of the bolt hole).

(ii) Visually check for a gap between the thrust washer and the retainer, P/N 900R2100009–101 or –103. The thrust washer is depicted as item 2 and the retainer is depicted as item 8 in Figure 1 to paragraph (e) of this AD.

Gap and Force Check of the Blade Retention Bolts

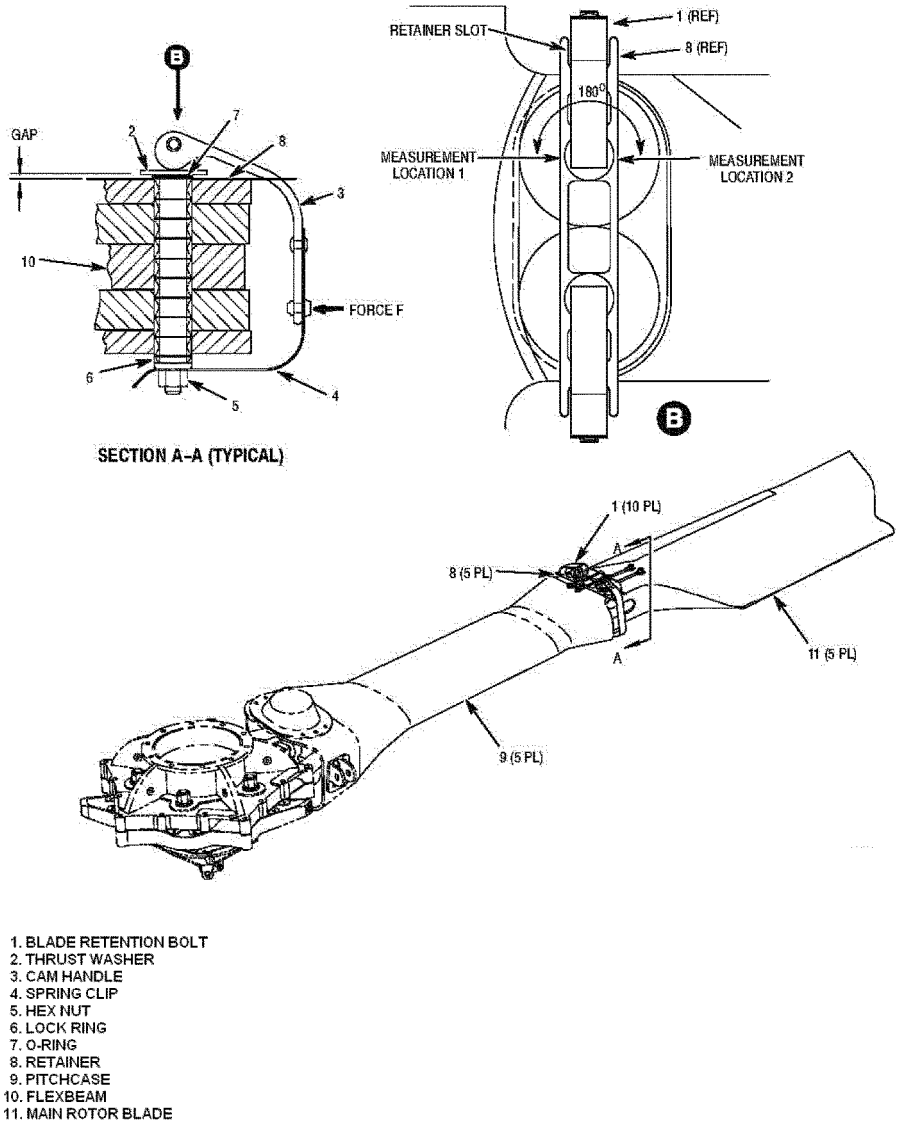

Figure 1 to paragraph (e) of this AD

(iii) The actions required by paragraphs (e)(1)(i) and (e)(1)(ii) may be performed by the owner/operator (pilot) holding at least a private pilot certificate and must be entered into the aircraft maintenance records showing compliance with this AD in accordance with 14 CFR 43.9(a)(1)–(4) and 14 CFR 91.417(a)(2)(v). The record must be maintained as required by 14 CFR 91.417, 121.380, or 135.439.

(iv) If there is any indication of bolt failure or if there is no gap between the thrust washer and retainer, before further flight, remove and inspect the bolt for a crack.

Replace any cracked bolt with an airworthy bolt.

(2) Within 300 hours time-in-service (TIS), and thereafter at intervals not to exceed 300 hours TIS, inspect each bolt for a gap between the thrust washer and the retainer.

(i) Determine whether an O-ring is installed. Install any missing O-ring.

(ii) If there is no gap between the thrust washer and retainer, before further flight, remove and inspect the bolt for a crack. Replace any cracked bolt with an airworthy bolt.

(iii) If there is a gap between the thrust washer and retainer, measure the gap in two locations, 180 degrees apart, with a feeler gage. If the gap is more than 0.100 inch (2.54 mm) at either location, before further flight, remove and inspect the bolt for a crack. Replace any cracked bolt with an airworthy bolt.

(f) Alternative Methods of Compliance (AMOCs)

(1) The Manager, Los Angeles Aircraft Certification Office, Airframe Branch (ANM–120L), FAA, may approve AMOCs for this AD. Send your request to Roger Durbin, Aerospace Engineer, FAA, Los Angeles Aircraft Certification Office, Airframe Branch, ANM–120L, 3960 Paramount Blvd., Lakewood, CA 90712, telephone (562) 627–5233, fax (562) 627–5210, email *roger.durbin@faa.gov*.

(2) For operations conducted under a 14 CFR part 119 operating certificate or under 14 CFR part 91, subpart K, we suggest that you notify your principal inspector or lacking a principal inspector, the manager of the local flight standards district office or certificate holding district office before operating any aircraft complying with this AD through an AMOC.

(g) Additional Information

MDHI Alert Service Bulletin SB900–116R1, dated April 9, 2010, which supersedes ASB SB900–116, dated February 24, 1010, neither of which is incorporated by reference, contains additional information about the subject of this AD. For service information identified in this AD, contact MDHI, Attn: Customer Support Division, 4555 E. McDowell Rd., Mail Stop M615, Mesa, AZ 85215–9734, telephone (800) 388–3378, fax (480) 346–6813, or at *http://www.mdhelicopters.com*. You may review copies of the service information at the FAA, Office of the Regional Counsel, Southwest Region, 2601 Meacham Blvd., Room 663, Fort Worth, Texas.

(h) Subject

Joint Aircraft System Component: 6210: Main rotor blade retention bolts.

Issued in Fort Worth, Texas, on May 29, 2013.

Kim Smith,

Directorate Manager, Rotorcraft Directorate, Aircraft Certification Service.

[FR Doc. 2013–14139 Filed 6–13–13; 8:45 am]

BILLING CODE 4910–13–P

DEPARTMENT OF TRANSPORTATION

Federal Aviation Administration

14 CFR Part 71

[Docket No. FAA–2012–1341; Airspace Docket No. 12–ASO–47]

Proposed Establishment of Class E Airspace; Cleveland, TN

AGENCY: Federal Aviation Administration (FAA), DOT.

ACTION: Notice of proposed rulemaking (NPRM), withdrawal.

SUMMARY: A notice of proposed rulemaking published in the **Federal Register** of March 6, 2013, to establish Class E airspace at Cleveland Regional Jetport, Cleveland, TN, is being withdrawn. Upon review, the FAA found that, for clarity, combining this proposed rulemaking with another proposal to amend existing airspace is necessary.

DATES: Effective date: 0901 UTC. June 14, 2013.

FOR FURTHER INFORMATION CONTACT: John Fornito, Operations Support Group, Eastern Service Center, Federal Aviation Administration, P.O. Box 20636, Atlanta, Georgia 30320; telephone (404) 305–6364.

SUPPLEMENTARY INFORMATION:

History

On March 6, 2013, a NPRM was published in the **Federal Register** establishing Class E airspace at Cleveland, TN to accommodate new standard instrument approach procedures for Cleveland Regional Jetport (78 FR 14475). Subsequent to publication the FAA found that existing information for Bradley Memorial Hospital was omitted in the Cleveland, TN proposed rule. Also, there is another proposed rulemaking for Dayton, TN, with Bradley Memorial Hospital information. To avoid confusion this proposed rule is being withdrawn and will be combined with the Dayton, TN, proposed rulemaking.

Lists of Subjects in 14 CFR Part 71

Airspace, Incorporation by reference, Navigation (Air).

The Withdrawal

Accordingly, pursuant to the authority delegated to me, the Notice of Proposed Rulemaking, as published in the **Federal Register** on March 6, 2013 (78 FR 14474) (FR Doc 2013–05210.), is hereby withdrawn.

Authority: 49 U.S.C. 106(g); 40103, 40113, 40120; E.O. 10854, 24 FR 9565, 3 CFR, 1959–1963 Comp., p. 389.

Issued in College Park, Georgia, on June 7, 2013.

Barry A. Knight,

Manager, Operations Support Group, Eastern Service Center, Air Traffic Organization.

[FR Doc. 2013–14153 Filed 6–13–13; 8:45 am]

BILLING CODE 4910–13–P

DEPARTMENT OF COMMERCE

National Oceanic and Atmospheric Administration

15 CFR Part 922

[Docket No. 130403324–3376–01]

RIN 0648–BC94

Boundary Expansion of Thunder Bay National Marine Sanctuary

AGENCY: Office of National Marine Sanctuaries (ONMS), National Ocean Service (NOS), National Oceanic and Atmospheric Administration (NOAA), Department of Commerce (DOC).

ACTION: Proposed rule.

SUMMARY: The National Oceanic and Atmospheric Administration (NOAA) proposes to expand the boundary of Thunder Bay National Marine Sanctuary (TBNMS or sanctuary) and revise the corresponding sanctuary terms of designation. The proposed new boundary for TBNMS would increase the size of the sanctuary from 448 square miles to 4,300 square miles and would extend protection to 47 additional known historic shipwrecks of national significance. A draft environmental impact statement has been prepared for this proposed action. NOAA is soliciting public comment on the proposed rule and draft environmental impact statement.

DATES: Comments will be considered if received by August 13, 2013. Public hearings will be held at 6 p.m. in the following locations:

- Monday, July 15—Presque Isle District Library, Rogers City Location, 181 East Erie Street, Rogers City, MI 49779.
- Tuesday, July 16—Great Lakes Maritime Heritage Center, 500 W. Fletcher Street, Alpena, MI 49707.
- Wednesday, July 17—Alcona County Library, Harrisville Branch, 312 W. Main, Harrisville, MI 48740.

ADDRESSES: You may submit comments on this document, identified by NOAA–NOS–2012–0077, by any of the following methods:

- *Electronic Submission:* Submit all electronic public comments via the Federal e-Rulemaking Portal. Go to *www.regulations.gov/*

#!docketDetail;D=NOAA–NOS–2012–0077, click the ''Comment Now!'' icon, complete the required fields, and enter or attach your comments.

• *Mail:* Submit written comments to Thunder Bay National Marine Sanctuary, 500 W. Fletcher, Alpena, Michigan 49707, Attn: Jeff Gray, Superintendent.

Instructions: Comments sent by any other method, to any other address or individual, or received after the end of the comment period, may not be considered by NOAA. All comments received are a part of the public record and will generally be posted for public viewing on www.regulations.gov without change. All personal identifying information (e.g., name, address, etc.), confidential business information, or otherwise sensitive information submitted voluntarily by the sender will be publicly accessible. NOAA will accept anonymous comments (enter ''N/A'' in the required fields if you wish to remain anonymous). Attachments to electronic comments will be accepted in Microsoft Word, Excel, or Adobe PDF file formats only.

FOR FURTHER INFORMATION CONTACT: Jeff Gray, Superintendent, Thunder Bay National Marine Sanctuary at 989–356–8805 ext. 12 or *jeff.gray@noaa.gov*

Copies of the draft environmental impact statement and proposed rule can be downloaded or viewed on the internet at *www.regulations.gov* (search for docket # NOAA–NOS–2012–0077) or at *http://thunderbay.noaa.gov.* Copies can also be obtained by contacting the person identified under ''For Further information Contact''.

SUPPLEMENTARY INFORMATION:

I. Background

A. Thunder Bay National Marine Sanctuary

Located in northwestern Lake Huron, Thunder Bay is adjacent to one of the most treacherous stretches of water within the Great Lakes system. Unpredictable weather, murky fog banks, sudden gales, and rocky shoals earned the area the name ''Shipwreck Alley''. Fire, ice, collisions, and storms have claimed nearly 200 vessels in and around Thunder Bay. Today, the 448-square-mile Thunder Bay National Marine Sanctuary (TBNMS or sanctuary) protects one of America's best-preserved and nationally-significant collections of shipwrecks. To date, 45 shipwrecks have been discovered within the sanctuary. In addition to helping to protect and interpret individual sites, understanding the sanctuary in the context of a maritime cultural landscape reveals a broad historical canvas that can encompass many different perspectives to foster an interconnected understanding of the maritime past. As defined by the National Park Service, a cultural landscape is a geographic area including both cultural and natural resources, coastal environments, human communities, and related scenery that is associated with historic events, activities or persons, or exhibits other cultural or aesthetic values. The maritime cultural landscape allows Thunder Bay's maritime heritage to continue to unfold as new discoveries are made and encourages an increasingly diverse public to find shared meaning in this nationally significant place.

Although the sheer number of shipwrecks is impressive, it is the range of vessel types located in the sanctuary, their excellent state of preservation and accessibility to the public that makes the collection nationally significant. From an 1844 sidewheel steamer to a modern 500-foot-long German freighter, the shipwrecks of Thunder Bay represent a microcosm of maritime commerce and travel on the Great Lakes. Well preserved by Lake Huron's cold, fresh water, the shipwrecks and related maritime heritage sites in and around Thunder Bay are historically, archaeologically and recreationally significant. NOAA designated the area as a national marine sanctuary in 2000. The sanctuary is managed jointly by NOAA and the State of Michigan under the umbrella of the 2002 Memorandum of Agreement (December 2002).

B. Need for Action

The purpose of this proposed action would be to provide long-term protection and comprehensive management for 47 additional known historic shipwrecks of special national significance, and other maritime heritage resources (i.e. docks, cribs), located outside the sanctuary's existing boundary. The action would also provide protection for historic shipwrecks and maritime heritage resources yet to be discovered. This proposed action would be compatible with the purposes and policies of the National Marine Sanctuaries Act (NMSA; 16 U.S.C. 1431).

Beyond the sanctuary's existing boundaries are 47 additional known historic shipwrecks that are at risk from threats which include both human activities and natural processes. Human threats include looting and altering sanctuary shipwreck sites, and damaging or destroying sites by anchoring. Natural processes include the impacts of wind, waves, storms and ice, as well as the impact of invasive species such as zebra and quagga mussels that today cover most of Lake Huron's shipwrecks. These processes threaten the long term sustainability of historic shipwrecks and other maritime heritage resources. In order to ensure long-term protection, these 47 additional known historic shipwreck sites require the same level of research and resource protection afforded sites within the existing TBNMS boundary.

Although additional shipwreck sites exist outside the proposed boundary expansion area, NOAA's proposed action contains the sites whose protection would best complement from an archaeological, historical and recreational perspective, the resources in the existing sanctuary boundaries. Such maritime heritage resources require long-term protection and management to reduce threats that could impact their historical, archeological, recreational and educational value. There is a need to apply education and outreach efforts to shipwrecks beyond the sanctuary's existing boundary to promote responsible use of sanctuary resources and help reduce human impacts. The comprehensive and coordinated management that NOAA would provide includes extensive research, education, and outreach programs. This would fill important gaps in archeological knowledge and historical context of these shipwrecks, and enhance sustainable recreational and tourism opportunities.

While state laws and other applicable federal law (such as The Abandoned Shipwreck Act codified in 43 U.S.C. 2101, *et seq.*) intended to reduce the impact of human activities on historic shipwrecks and related maritime heritage resources have been effective, those laws only apply to abandoned property. Sanctuary regulation in the proposed expanded area would provide increased protection in the following ways: (1) The Sanctuary regulations would apply to all historic shipwrecks, not just abandoned shipwrecks; (2) The use of grappling hooks or other anchoring devices would be prohibited on underwater cultural resource sites that are marked with a mooring buoy; (3) ''Hand-taking'' of artifacts outside the Thunder Bay Underwater Preserve, but still within the revised Sanctuary boundary, would be prohibited; (4) Permit applications would be required to satisfy the Federal Archaeology Program guidelines for all sites located within the revised sanctuary boundary; and (5) as an additional enforcement mechanism, NOAA would still be able to assess civil penalties under the

National Marine Sanctuaries Act for violation of sanctuary regulations.

C. History of Process

NOAA selected the proposed boundary after considering alternatives evaluated when the sanctuary was designated in 2000; expansion alternatives later developed by the Sanctuary Advisory Council in 2007; and considerable public input during public scoping meetings in 2012. Historical and archaeological research conducted since the sanctuary's designation was used to establish the number and condition of resources within the proposed new boundary for TBNMS, as well as the historical, archeological and recreational significance of these sites. Nearly all of the known sites within the proposed action are eligible for listing on the National Register of Historic Places.

NOAA designated the sanctuary as the nation's thirteenth national marine sanctuary in 2000 for the purpose of: ''Providing long-term protection and management to the conservation, recreational, research, educational, and historical resources and qualities of the area.'' Because new challenges and opportunities emerge with time, the NMSA requires periodic updating of sanctuary management plans (and regulations, if appropriate) to reevaluate site-specific goals and objectives and to develop management strategies and activities to ensure that the sanctuary best protects its resources. The original TBNMS management plan was written as part of the sanctuary designation process and published in the final environmental impact statement.[1] The designation of the sanctuary in 2000 has had a tremendously positive socioeconomic impact on community development and maritime heritage tourism in Northeast Michigan, and as a result government officials and the public are interested in how a sanctuary expansion could further contribute to enhancing recreational and tourism opportunities for those communities. Expansion of the sanctuary boundaries could bring similar positive socioeconomic impacts to a larger geographic area in Michigan. As the idea for a boundary expansion has been considered for many years, NOAA has documented considerable support for expansion. The documentary support includes letters, resolutions, Congressional testimony, and Sanctuary Advisory Council recommendations from the past five years.[2]

In 2007, as part of the management plan review process, NOAA established a sanctuary advisory council boundary expansion working group to evaluate whether the boundary should be expanded to protect, manage, and interpret additional shipwrecks and other potential maritime heritage resources. The boundary expansion working group identified and considered the following study area for evaluation of boundary alternatives: a 4,110-square-mile area that extended the current sanctuary south into Alcona County, north into Presque Isle County, and east to the international border with Canada. The study area was identified based on the density of known and undiscovered resources, the historical, archaeological, and recreational significance of individual and collective resources, and the maritime landscape. On May 22, 2007, the boundary expansion working group presented this recommendation to the Sanctuary Advisory Council (SAC). The SAC responded by passing a resolution to expand the boundaries to the recommended area. Based on this recommendation, Senator Carl Levin introduced two sanctuary expansion bills into the U.S. Congress, but they were never brought to a vote.

In 2009, NOAA published an updated final management plan.[3] In response to the Sanctuary Advisory Council's recommendation, the Thunder Bay NMS Final Management Plan (2009) contains a strategy (Strategy RP–1) to ''Evaluate and assess a proposed expansion of the sanctuary to a 3,662-square-mile area from Alcona County to Presque Isle County, east to the international border with Canada to protect, manage, and interpret additional shipwrecks and other potential maritime heritage resources.'' This action plan formed the basis for NOAA's current proposed action. The 3,662-square-mile area added to the area of the existing sanctuary would have resulted in a total sanctuary area of 4,110 square-miles.

In April 2012, NOAA held three public scoping meetings: in Alpena, Harrisville and Rogers City, which were attended by 22, 6 and 14 people, respectively. In addition, NOAA received 21 letters and emails, with an additional seven comments submitted through the online portal. Most of the comments submitted were in support of boundary expansion. In fact, several people suggested a slightly larger area than 4,110 square-miles to protect an additional five historic shipwrecks. This larger area, for a total of 4,300 square miles, is presented in this proposed action.

II. Summary of the Proposed Regulations

The proposed regulatory action would expand the boundaries of the sanctuary, increasing the total area of the sanctuary from 448 square miles to approximately 4,300 square miles. The southern boundary of the sanctuary begins where the southern boundary of Alcona County intersects with the ordinary high water mark of Lake Huron and runs east until it intersects the U.S./Canada international boundary. The eastern boundary of the sanctuary follows the international boundary until it intersects with the 45°50′ N line of latitude. The northern boundary follows this line of latitude (45°50′ N) westward until it intersects the 84°20′ W line of longitude. The western boundary extends south along this line of longitude (84°20′ W) until it intersects the ordinary high water mark at Cordwood Point. From there, the western boundary follows the ordinary high water mark as defined by Part 325, Great Lakes Submerged Lands, of P.A. 451 (1994), as amended, until it intersects the southern boundary of Alcona County. The table in Appendix A of Thunder Bay National Marine Sanctuary regulations provides several coordinates used to define the boundaries of the sanctuary. A map of this expanded area can be found on our Web site at *http://thunderbay.noaa.gov/management/expansion.html* and in the draft environmental impact statement.

III. Summary of Proposed Changes to the Sanctuary Terms of Designation

Section 304(a)(4) of the NMSA requires that the terms of designation for national marine sanctuaries include: (1) The geographic area included within the Sanctuary; (2) the characteristics of the area that give it conservation, recreational, ecological, historical, research, educational, or esthetic value; and (3) the types of activities subject to regulation by NOAA to protect those characteristics. This section also specifies that the terms of the designation may be modified only by the same procedures by which the original designation is made.

To implement this action, NOAA is proposing to make changes to the TBNMS terms of designation, which were previously published in the **Federal Register** on June 22, 2000 (65 FR 39042). The changes would:

[1] *http://thunderbay.noaa.gov/pdfs/thunderbayeis.pdf.*

[2] *http://thunderbay.noaa.gov/management/expansion.html.*

[3] *http://sanctuaries.noaa.gov/management/mpr/tbnmsmp.pdf.*

1. Modify Article II ''Description of the Area'' by changing the description of size of the sanctuary and describing the proposed new boundary for the sanctuary.

2. Modify Article III ''Characteristics of the Area That Give It Particular Value'' by changing the description of the nationally significant characteristics of the area included in the Sanctuary.

3. Modify Article V ''Effect on Other Regulations, Leases, Permits, Licenses, and Rights'' to reflect the new organization within NOAA.

The revised terms of designation are proposed to read as follows (new text in parentheses and deleted text in brackets):

(Proposed Revisions to the Terms of Designation for the Thunder Bay National Marine Sanctuary and Underwater Preserve)

Under the authority of the National Marine Sanctuaries Act, as amended (the ''Act'' or ''NMSA''), 16 U.S.C. 1431 *et seq.,* Thunder Bay and its surrounding waters offshore of Michigan, and the submerged lands under Thunder Bay and its surrounding waters, as described in Article II, are hereby designated as the Thunder Bay National Marine Sanctuary and Underwater Preserve for the purposes of providing long-term protection and management to the conservation, recreational, research, educational, and historical resources and qualities of the area. Section 304(a)(4) of the NMSA requires that the terms of designation include the geographic area included within the Sanctuary; the characteristics of the area that give it conservation, recreational, ecological, historical, research, educational, or esthetic value; and the types of activities that will be subject to regulation by the Secretary of Commerce to protect those characteristics. The terms of designation may be modified only by the procedures provided in Section 304(a) of the Act (the same procedures by which the original designation is made). Thus, the terms of designation serve as a constitution for the Sanctuary.

Article II. Description of the Area

The Thunder Bay National Marine Sanctuary and Underwater Preserve consists of an area of approximately (4,300) [448] square miles of waters of Lake Huron and the submerged lands thereunder, over, around, and under the underwater cultural resources in Thunder Bay. (The boundaries form a polygon by extending along the ordinary high water mark of the Michigan shoreline from approximately the northern and southern boundaries of Presque Isle and Alcona counties, respectively, cutting across the mouths of rivers and streams, and lakeward from those points along latitude lines to the U.S./Canada international boundary. A more detailed description of the boundary and a list of coordinates are set forth in the regulations for the sanctuary at 15 CFR part 922 subpart R.) [The boundary forms an approximately rectangular area by extending along the ordinary high water mark of the Michigan shoreline from the northern and southern boundaries of Alpena County, cutting across the mouths of rivers and streams, and lakeward from those points along latitude lines to longitude 83 degrees west. The coordinates of the boundary are set forth in Appendix A to the regulations.]

Article III. Characteristics of the Area That Give It Particular Value

Thunder Bay and its surrounding waters contain approximately (92 known) [116] (historic) shipwrecks spanning more than a century of Great Lakes maritime history. (Archival research indicates that as many as 100 additional historic shipwrecks are yet to be found.) Virtually every type of vessel used on open Great Lakes waters has been documented in the Thunder Bay region, linking Thunder Bay inextricably to Great Lakes commerce. Most of the Great Lakes trades had a national, and sometimes an international, significance, and resulted in uniquely-designed vessels. Although not all of Thunder Bay's shipwrecks have been identified, studies undertaken to date indicate strong evidence of the [Bay's] (region's) national historic significance. The sunken vessels reflect transitions in ship architecture and construction methods, from wooden sailboats to early iron-hulled steamers.

(We draw s) [S]everal major conclusions regarding Thunder Bay's shipwrecks [may be drawn] from research and analysis undertaken to date: they are representative of the composition of the Great Lakes merchant marine from 1840 to 1970; they provide information on the various phases of American westward expansion; they provide information on the growth of American extraction and use of natural resources; they illustrate various phases of American industrialization; one shipwreck (Isaac M. Scott) may be used to study and interpret a specific event (the Great Storm of 1913) that had strong repercussions regionally, nationally, and internationally; and they provide interpretive material for understanding American foreign intercontinental trade within the Great Lakes. (In addition to the submerged resources described above, there are other aspects of the region's maritime cultural landscape. A cultural landscape is a geographic area including both cultural and natural resources, coastal environments, human communities, and related scenery that is associated with historic events, activities or persons, or exhibits other cultural or aesthetic values. The Thunder Bay region is comprised of many shoreline features such as beached shipwrecks, lighthouses, aids to navigation, abandoned docks, working waterfronts and Native American sites. Also important are the intangible elements such as spiritual places and legends.) Thunder Bay was established as the first State of Michigan Underwater Preserve in 1981 to protect underwater cultural resources. Increasing public interest in underwater cultural resources underscores the importance of continued efforts to discover, explore, document, study and to provide long-term, comprehensive protection for the Bay's shipwrecks and other underwater cultural resources.

Article V. Effect on Other Regulations, Leases, Permits, Licenses, and Rights

Section 2. Other. If any valid regulation issued by any Federal, State, or local authority of competent jurisdiction, regardless of when issued, conflicts with a Sanctuary regulation, the regulation deemed by the Director, Office of (National Marine Sanctuaries) [Ocean and Coastal Resource Management], National Oceanic and Atmospheric Administration, or his or her designee, in consultation with the State of Michigan, to be more protective of Sanctuary resources shall govern. Pursuant to Section 304(c)(1) of this Act, 16 U.S.C. 1434(c)(1), no valid lease, permit, license, approval, or other authorization issued by any Federal, State, or local authority of competent jurisdiction, or any right of subsistence use or access, may be terminated by the Secretary of Commerce, or his or her designee, as a result of this designation, or as a result of any Sanctuary regulation, if such lease, permit, license, approval, or other authorization, or right of subsistence use or access was issued or in existence as of the effective date of this designation. However, the Secretary of Commerce, or his or her designee, in consultation with the State of Michigan, may regulate the exercise of such authorization or right consistent with the purposes for which the Sanctuary is designated.

[End of Terms of Designation.]

IV. Classification

A. National Environmental Policy Act

NOAA has prepared a draft environmental impact statement to evaluate the impacts of this proposed rulemaking. No significant adverse impacts to resources and the human environment are expected. Rather, long-term beneficial impacts are anticipated if the proposed action is implemented. Under NEPA (43 U.S.C. 4321 et seq.), an environmental assessment would have sufficed to analyze the impacts of this action since NOAA is proposing that no significant impacts are likely. However, the NMSA requires NOAA to publish a draft environmental impact statement (DEIS) regardless of the intensity of the impacts of the proposed action if NOAA is considering changing the terms of designation of a sanctuary (16 U.S.C. 1434 (a)(2)). Copies of the DEIS are available at the address and Web site listed in the **ADDRESSES** section of this proposed rule.

B. Executive Order 12866: Regulatory Impact

This proposed rule has been determined to be not significant within the meaning of Executive Order 12866.

C. Executive Order 13132: Federalism Assessment

NOAA has concluded this regulatory action does not have federalism implications sufficient to warrant preparation of a federalism assessment under Executive Order 13132.

D. Executive Order 13175: Consultation and Coordination With Indian Tribal Governments

Concurrent with the development of this proposed rule, NOAA invited the Chippewa Ottawa Resource Authority (CORA) to participate in government-to-government consultation. CORA gathers representatives from the Bay Mills Indian Community, Grand Traverse Band of Ottawa and Chippewa Indians, Little River Band of Ottawa Indians, Little Traverse Bay Bands of Odawa Indians, Sault Ste. Marie Tribe of Chippewa Indians under its mantle. NOAA plans to continue collaboration with the CORA and invite each individual tribe to government-to-government consultation. Consultation under E.O. 13175 is expected to be completed before the publication of the final rule.

E. Regulatory Flexibility Act

The Chief Counsel for Regulation of the Department of Commerce certified to the Chief Counsel for Advocacy of the Small Business Administration (SBA) that this proposed rule, if adopted, would not have a significant economic impact on a substantial number of small entities. The Regulatory Flexibility Act (5 U.S.C. 601(3)) defines ''small business'' as having the same meaning as ''small business concern'' under the Small Business Act. Pursuant to the Small Business Act, a small business concern is one which is independently owned and operated and which is not dominant in its field of operation (15 U.S.C. 632(a)(1)).

Small business concerns operating within the sanctuary include consumptive recreational charter businesses and non-consumptive recreational charter businesses. For the area subject to this proposed action, these include:

a. Consumptive Recreational Charter Businesses

A sports and recreation business is considered a ''small'' business if it has annual receipts not in excess of $7 million (13 CFR 121.201). Three consumptive recreational charter businesses (also known as commercial passenger fishing vessels or CPFVs) are active in the TBNMS.

b. Non-Consumptive Recreational Charter Businesses

Both sports and recreation businesses, and scenic and sightseeing transportation businesses are considered ''small'' businesses if they have annual receipts not in excess of $7 million (13 CFR 121.201). Over six non-consumptive recreational charter businesses take passengers to the TBNMS. These businesses primarily support non-consumptive diving, snorkeling and sightseeing activities.

It has been determined that the proposed prohibitions that would apply to the area under consideration for expansion would not interfere with the operation of existing charter diving and sightseeing small businesses because these regulations are compatible with sustainable tourism. In fact, protecting the shipwrecks may make them better recreational venues. Therefore, there will be no adverse economic impact to recreational charter diving and sightseeing small businesses operating in the proposed sanctuary expansion area.

Because NOAA is not proposing any fishing regulations as part of this action, there will be no adverse economic impact to recreational charter fishing small businesses operating in the proposed sanctuary expansion area. Other sanctuary regulations are not expected to affect charter fishing small businesses either.

According to a regional 2005 study on total visitor spending, the sanctuary benefits the local economy by partially contributing $92 million in sales, $35.8 million in personal income to residents, $51.3 million in value added and 1,704 jobs through increased tourism.

NOAA works with local officials to recruit new businesses, as well as to expand existing operations. Alpena Shipwreck Tours serves as an example of a new business recruited by NOAA and local officials. In the summer of 2011, Alpena Shipwreck Tours began glass-bottomed boat tours in the sanctuary. The company invested $800,000+ in the 65' glass-bottomed vessel, and has been successful thus far. NOAA has also worked with local groups to recruit and promote new outfitters, kayak tours, bike rentals, dive shops and charters.

In addition, the sanctuary's visitor center—Great Lakes Maritime Heritage Center—is a major tourist destination for the region, hosting approximately 60,000 visitors annually. This is significant because the population of the city of Alpena itself is only 11,000 people.

Because the impacts of this proposed rule on the recreational charter fishing businesses and the recreational charter diving business would have no impact or actually a beneficial economic impact, the Chief Counsel for Regulation certified to the Chief Counsel for Advocacy at SBA that this rulemaking would not have a significant economic impact on a substantial number of small entities.

F. Paperwork Reduction Act

This proposed rule contains a collection-of-information requirement subject to the Paperwork Reduction Act (PRA) which has been approved by the Office of Management and Budget (OMB) under control number 0648–0141. The public reporting burden for national marine sanctuary general permits is estimated to average 1 hour 30 minutes per response, including the time for reviewing instructions, searching existing data sources, gathering and maintaining the data needed, and completing and reviewing the collection of information.

Nationwide, NOAA issues approximately 200 national marine sanctuary general permits each year. Of this amount, TBNMS does not typically issue any sanctuary general permits. The permitting regulations for TBNMS specify that under certain conditions a person may conduct an otherwise prohibited activity if it is conducted in accordance with a state permit and the State Archaeologist certifies to NOAA

that the activity will be conducted consistent with the Memorandum of Agreement. In the absence of certification from the State Archaeologist or if no State permit is required, a person may secure a sanctuary general permit directly from NOAA to conduct a prohibited activity if the activity is conducted in accordance with a Federal permit. Even though this proposed rule may result in a few additional permit applications, due to the overall larger area under management, this rulemaking would not appreciably change the average annual number of respondents on a national level or the reporting burden for this information requirement. Therefore, NOAA has determined that the proposed regulations do not necessitate a modification to its information collection approval by the Office of Management and Budget under the Paperwork Reduction Act.

Comments regarding this burden estimate, or any other aspect of this data collection, including suggestions for reducing the burden, may be sent to NOAA (see **ADDRESSES**) and to OMB by email to *OIRA_submission@omb.eop.gov* or fax to (202) 395–7285. Notwithstanding any other provision of law, no person is required to respond to, nor shall any person be subject to a penalty for failure to comply with, a collection of information subject to the requirements of the PRA, unless that collection of information displays a currently valid OMB Control Number.

G. National Historic Preservation Act

The National Historic Preservation Act of 1966 (NHPA; Pub. L. 89–665; 16 U.S.C. 470 et seq.) is intended to preserve historical and archaeological sites in the United States of America. The act created the National Register of Historic Places, the list of National Historic Landmarks, and the State Historic Preservation Offices. Section 106 of the NHPA requires Federal agencies to take into account the effects of their undertakings on historic properties, and afford the Advisory Council on Historic Preservation (ACHP) a reasonable opportunity to comment. The historic preservation review process mandated by Section 106 is outlined in regulations issued by ACHP (36 CFR part 800). The Michigan State Historic Preservation Office, which implements section 106 of the NHPA, is located in the Michigan State Housing Development Authority. NOAA has and continues to consult with the State Historic Preservation Officer on matters related to Section 106 of the NHPA. A programmatic agreement will be developed if the expansion of the sanctuary is finalized and if it is determined to be necessary.

V. Request for Comments

NOAA requests comments on this proposed rule for 60 days after publication of this notice.

List of Subjects in 15 CFR Part 922

Administrative practice and procedure, Coastal zone, Fishing gear, Marine resources, Natural resources, Penalties, Recreation and recreation areas, Wildlife.

(Federal Domestic Assistance Catalog Number 11.429 Marine Sanctuary Program)

Dated: June 6, 2013.

Holly A. Bamford,

Assistant Administrator, National Ocean Service National Oceanic and Atmospheric Administration.

Accordingly, for the reasons set forth above, NOAA proposes amending part 922, title 15 of the Code of Federal Regulations as follows:

PART 922 SUBPART R—THUNDER BAY NATIONAL MARINE SANCTUARY AND UNDERWATER PRESERVE

■ 1. The authority citation for part 922 continues to read as follows:

Authority: 16 U.S.C. 1431 et seq.

■ 2. Revise § 922.190 to read as follows:

§ 922.190 Boundary.

The Thunder Bay National Marine Sanctuary and Underwater Preserve (Sanctuary) consists of an area of approximately 4,300 square miles (11,137 square kilometers) of waters of Lake Huron and the submerged lands thereunder, over, around, and under the underwater cultural resources in Thunder Bay. The eastern boundary of the sanctuary begins at the intersection of the southern Alcona County boundary and the U.S./Canada international boundary (Point 1). The eastern boundary of the sactuary follows the international boundary passing through Points 2–6 until it intersects with the 45°50′ N line of latitude at Point 7. The northern boundary follows the line of latitude 45°50′ N westward until it intersects the 84°20′ W line of longitude at Point 8. The western boundary extends south along the 84°20′ W line of longitude towards Point 9 until it intersects the ordinary high water mark at Cordwood Point. From there, the western boundary follows the ordinary high water mark as defined by Part 325, Great Lakes Submerged Lands, of P.A. 451(1994), as amended, until it intersects the southern Alcona County boundary between Point 10 and Point 11. The table in Appendix A of this Subpart provides several useful coordinates along the boundary of the sanctuary.

■ 3. Revise Appendix A to Subpart R of Part 922 to read as follows:

Appendix A to Subpart R of Part 922—Thunder Bay National Marine Sanctuary and Underwater Preserve Boundary Coordinates

[Based on North American Datum of 1983]

Point ID	Latitude (north)	Longitude (west)
1	44.512834	−82.329519
2	44.858147	−82.408717
3	45.208484	−82.490596
4	45.335902	−82.52064
5	45.771937	−83.483974
6	45.773944	−83.636867
7	45.833333	−83.584432
8	45.833333	−84.333333
9	45.662858	−84.333333
10	44.511734	−83.320169
11	44.512834	−82.329519

[FR Doc. 2013–13908 Filed 6–13–13; 8:45 am]

BILLING CODE 3510–NK–P

DEPARTMENT OF THE INTERIOR

Office of Surface Mining Reclamation and Enforcement

30 CFR Part 934

[SATS No. ND–052–FOR; Docket ID OSM–2012–0021; S1D1S SS08011000 SX066A000 67F 134S180110; S2D2S SS08011000 SX066A00 33F 13XS501520]

North Dakota Regulatory Program

AGENCY: Office of Surface Mining Reclamation and Enforcement, Interior.

ACTION: Proposed rule; reopening of public comment period and opportunity for public hearing.

SUMMARY: We are announcing receipt of North Dakota's response to the Office of Surface Mining Reclamation and Enforcement's (OSM) March 13, 2013, issue letter pertaining to a previously proposed amendment to the North Dakota regulatory program (hereinafter, the ''North Dakota program'') under the Surface Mining Control and Reclamation Act of 1977 (''SMCRA'' or ''the Act''). North Dakota intends to revise its program to be consistent with the corresponding Federal regulations, add a new subsection to an existing rule with general requirements on the format of electronic applications, and make a minor correction to a provision pertaining to a separate rule which was amended to no longer require renewal of a permit once lands in that permit are

no longer being mined or used in the support of mining. This document gives the times and locations that the North Dakota program and proposed amendment to that program are available for your inspection, the comment period during which you may submit written comments on the amendment, and the procedures that we will follow for the public hearing, if one is requested.

DATES: The comment period for the proposed rule published January 29, 2013 (78 FR 6062), is reopened. We will accept written comments on this amendment until 4 p.m., m.d.t. July 1, 2013. If requested, we will hold a public hearing on the amendment on July 1, 2013. We will accept requests to speak until 4 p.m., m.d.t. on July 1, 2013.

ADDRESSES: You may submit comments by either of the following two methods:

- *Federal eRulemaking Portal: www.regulations.gov.* This proposed rule has been assigned Docket ID: OSM–2012–0021. If you would like to submit comments through the Federal eRulemaking Portal, go to *www.regulations.gov* and follow the instructions.
- *Mail/Hand Delivery/Courier:* Jeffrey Fleischman, Director, Casper Field Office, Office of Surface Mining Reclamation and Enforcement, Dick Cheney Federal Building, POB 11018, 150 East B Street Casper, Wyoming 82601–1018.

For detailed instructions on submitting comments and additional information on the rulemaking process, see the ''III. Public Comment Procedures'' in the **SUPPLEMENTARY INFORMATION** section of this document.

In addition to viewing the docket and obtaining copies of documents at *www.regulations.gov,* you may review copies of the North Dakota program, this amendment, a listing of any public hearings, and all written comments received in response to this document at the addresses listed below during normal business hours, Monday through Friday, excluding holidays. You may also receive one free copy of the amendment by contacting OSM's Casper Field Office.

Jeffrey Fleischman, Director, Casper Field Office, Office of Surface Mining Reclamation and Enforcement, Dick Cheney Federal Building, PO Box 11018, 150 East B Street, Casper, Wyoming 82601–1018, (307) 261–6555, *jfleischman@osmre.gov.*

James Deutsch, Director, Reclamation Division, North Dakota Public Service Commission, 600 East Boulevard, Dept. 408, Bismarck, North Dakota 58505–0480, (701) 328–2251, *jdeutsch@nd.gov.*

FOR FURTHER INFORMATION CONTACT: Jeffrey Fleischman, Telephone: (307) 261–6555. Internet: *jfleischman@osmre.gov.*

SUPPLEMENTARY INFORMATION:

I. Background on the North Dakota Program
II. Description of the Proposed Amendment
III. Public Comment Procedures
IV. Procedural Determinations

I. Background on the North Dakota Program

Section 503(a) of the Act permits a State to assume primacy for the regulation of surface coal mining and reclamation operations on non-Federal and non-Indian lands within its borders by demonstrating that its State program includes, among other things, ''a State law which provides for the regulation of surface coal mining and reclamation operations in accordance with the requirements of this Act. . . . ; and rules and regulations consistent with regulations issued by the Secretary pursuant to this Act.'' See 30 U.S.C. 1253(a)(1) and (7). On the basis of these criteria, the Secretary of the Interior conditionally approved the North Dakota program on December 15, 1980. You can find background information on the North Dakota program, including the Secretary's findings, the disposition of comments, and conditions of approval of the North Dakota program in the December 15, 1980 **Federal Register** (45 FR 82214). You can also find later actions concerning North Dakota's program and program amendments at 30 CFR 934.15, 934.16, and 934.30.

II. Description of the Proposed Amendment

By letter dated November 14, 2012, North Dakota sent us a proposed amendment to its program (Administrative Record Document ID No. OSM–2012–0021–0002) under SMCRA (30 U.S.C. 1201 *et seq.*). North Dakota sent the amendment in response to a October 2, 2009 letter (Document ID No. OSM–2012–0021–0004) that we sent to North Dakota in accordance with 30 CFR 732.17(c), and to include the changes made at its own initiative. The full text of the program amendment is available for you to read at the locations listed above under **ADDRESSES**.

Specifically, North Dakota proposes to add and change a number of rules in the North Dakota Administrative Code (NDAC) Section 69–5.2. The changes regard the use of OSM's Applicant Violator System (AVS) prior to the approval of permits, renewals, and certain revisions. The proposed rule also contains procedures for coal operators to use if they want to submit challenges to information in the AVS. These changes are being proposed to bring North Dakota's coal program into compliance with the counterpart Federal rules regarding the AVS and ownership and control. Additionally, North Dakota is submitting a proposed rule change that adds specificity to the format requirements of electronic applications and a change which updates a provision to no longer require the renewal of a permit once surface mining is completed and only reclamation work remains.

We announced receipt of the proposed amendment in the January 29, 2013 **Federal Register** (78 FR 6062; Administrative Record No. OSM–2012–0021–0001), provided an opportunity for a public hearing or meeting, and invited public comment on the proposed amendment. Because no one requested a public hearing or meeting, none was held. The public comment period ended on February 28, 2013. We received a letter from the Bureau of Land Management stating that they had no comment. We did not receive any comments from the general public.

During our review of the amendment, we identified an area of concern regarding the fact that North Dakota failed to provide a counterpart rule to 30 CFR 774.12(c)(1). We notified North Dakota of our concerns on March 13, 2013 (Administrative Record No. OSM–2012–0021–0007 and OSM–2012–0021–0008). North Dakota responded in a letter dated May 10, 2013 by revising their proposed amendment language (Administrative Record No. OSM–2012–0021–0009). Specifically, North Dakota corrected a drafting error which occurred from the use of a previous version of the 30 CFR rules by modifying NDAC Section 69–05.2–10–09. The proposed modification provides State counterpart language to 30 CFR 778.11(d), which is referenced in 30 CFR 774.12(c)(1).

III. Public Comment Procedures

Under the provisions of 30 CFR 732.17(h), we are seeking your comments on whether the amendment satisfies the applicable program approval criteria of 30 CFR 732.15. If we approve the amendment, it will become part of the North Dakota program.

Electronic or Written Comments

If you submit written comments, they should be specific, confined to issues pertinent to the proposed regulations, and explain the reason for any recommended change(s). We appreciate any and all comments, but those most useful and likely to influence decisions on the final regulations will be those

that either involve personal experience or include citations to and analyses of SMCRA, its legislative history, its implementing regulations, case law, other pertinent Tribal or Federal laws or regulations, technical literature, or other relevant publications.

We cannot ensure that comments received after the close of the comment period (see **DATES**) or sent to an address other than those listed above (see **ADDRESSES**) will be included in the docket for this rulemaking and considered.

Public Availability of Comments

Before including your address, phone number, email address, or other personal identifying information in your comment, you should be aware that your entire comment—including your personal identifying information—may be made publicly available at anytime. While you can ask us in your comment to withhold your personal identifying information from public review, we cannot guarantee that we will be able to do so.

Public Hearing

If you wish to speak at the public hearing, contact the person listed under **FOR FURTHER INFORMATION CONTACT** by 4 p.m., m.d.t. on July 1, 2013. If you are disabled and need reasonable accommodations to attend a public hearing, contact the person listed under **FOR FURTHER INFORMATION CONTACT**. We will arrange the location and time of the hearing with those persons requesting the hearing. If no one requests an opportunity to speak, we will not hold the hearing.

To assist the transcriber and ensure an accurate record, we request, if possible, that each person who speaks at a public hearing provide us with a written copy of his or her comments. The public hearing will continue on the specified date until everyone scheduled to speak has been given an opportunity to be heard. If you are in the audience and have not been scheduled to speak and wish to do so, you will be allowed to speak after those who have been scheduled. We will end the hearing after everyone scheduled to speak and others present in the audience who wish to speak, have been heard.

Public Meeting

If only one person requests an opportunity to speak, we may hold a public meeting rather than a public hearing. If you wish to meet with us to discuss the amendment, please request a meeting by contacting the person listed under **FOR FURTHER INFORMATION CONTACT**. All such meetings are open to the public and, if possible, we will post notices of meetings at the locations listed under **ADDRESSES**. We will make a written summary of each meeting a part of the administrative record.

IV. Procedural Determinations

Executive Order 12866—Regulatory Planning and Review

This rule is exempted from review by the Office of Management and Budget (OMB) under Executive Order 12866 (Regulatory Planning and Review).

Other Laws and Executive Orders Affecting Rulemaking

When a State submits a program amendment to OSM for review, our regulations at 30 CFR 732.17(h) require us to publish a notice in the **Federal Register** indicating receipt of the proposed amendment, its text or a summary of its terms, and an opportunity for public comment. We conclude our review of the proposed amendment after the close of the public comment period and determine whether the amendment should be approved, approved in part, or not approved. At that time, we will also make the determinations and certifications required by the various laws and executive orders governing the rulemaking process and include them in the final rule.

List of Subjects in 30 CFR Part 934

Intergovernmental relations, Surface mining, Underground mining.

Dated: May 16, 2013.

Allen D. Klein,

Director, Western Region.

[FR Doc. 2013–13835 Filed 6–13–13; 8:45 am]

BILLING CODE 4310–05–P

DEPARTMENT OF HOMELAND SECURITY

Coast Guard

33 CFR Part 100

[Docket No. USCG–2013–0327]

RIN 1625–AA08

Regattas and Marine Parades in the COTP Lake Michigan Zone

AGENCY: Coast Guard, DHS.

ACTION: Notice of proposed rulemaking.

SUMMARY: The Coast Guard proposes to amend special local regulations for annual regattas and marine parades in the Captain of the Port Lake Michigan Zone. This proposed rule is intended to provide for the safety of life and property on navigable waters immediately prior to, during, and immediately after regattas or marine parades. This proposed rule will establish restrictions upon, and control the movement of, vessels in a portion of the Captain of the Port Lake Michigan Zone.

DATES: Comments and related material must be received by the Coast Guard on or before July 15, 2013.

ADDRESSES: You may submit comments identified by docket number USCG–2013–0327 using any one of the following methods:

(1) *Federal eRulemaking Portal: http://www.regulations.gov.*

(2) *Fax:* 202–493–2251.

(3) *Mail:* Docket Management Facility (M–30), U.S. Department of Transportation, West Building Ground Floor, Room W12–140, 1200 New Jersey Avenue SE., Washington, DC 20590–0001.

(4) *Hand Delivery:* Same as mail address above, between 9 a.m. and 5 p.m., Monday through Friday, except Federal holidays. The telephone number is 202–366–9329.

To avoid duplication, please use only one of these four methods. See the ''Public Participation and Request for Comments'' portion of the **SUPPLEMENTARY INFORMATION** section below for instructions on submitting comments.

FOR FURTHER INFORMATION CONTACT: If you have questions on this proposed rule, call or email MST1 Joseph McCollum, Prevention Department, Coast Guard, Sector Lake Michigan, Milwaukee, WI, telephone (414) 747–7148, email *Joseph.P.McCollum@uscg.mil.* If you have questions on viewing or submitting material to the docket, call Barbara Hairston, Program Manager, Docket Operations, telephone 202–366–9826.

SUPPLEMENTARY INFORMATION:

Table of Acronyms

DHS Department of Homeland Security
FR Federal Register
NPRM Notice of Proposed Rulemaking
CFR Code of Federal Regulations

A. Public Participation and Request for Comments

We encourage you to participate in this rulemaking by submitting comments and related materials. All comments received will be posted without change to *http://www.regulations.gov* and will include any personal information you have provided.

1. Submitting Comments

If you submit a comment, please include the docket number for this rulemaking, indicate the specific section of this document to which each comment applies, and provide a reason for each suggestion or recommendation. You may submit your comments and material online at *www.regulations.gov,* or by fax, mail, or hand delivery, but please use only one of these means. If you submit a comment online, it will be considered received by the Coast Guard when the comment is successfully transmitted. If you fax, hand deliver, or mail your comment, it will be considered received by the Coast Guard when the comment is received at the Docket Management Facility. We recommend that you include your name and a mailing address, an email address, or a telephone number in the body of your document so that we can contact you if we have questions regarding your submission.

To submit your comment online, go to *http://www.regulations.gov,* type the docket number (USCG–2013–0327) in the ''SEARCH'' box and click ''SEARCH.''

If you submit your comments by mail or hand delivery, submit them in an unbound format, no larger than 8½ by 11 inches, suitable for copying and electronic filing. If you submit comments by mail and would like to know that they reached the Facility, please enclose a stamped, self-addressed postcard or envelope. We will consider all comments and material received during the comment period and may change the rule based on your comments.

2. Viewing Comments and Documents

To view comments, as well as documents mentioned in this preamble as being available in the docket, go to *http://www.regulations.gov,* type the docket number (USCG–2013–0327) in the ''SEARCH'' box and click ''SEARCH.'' Click on Open Docket Folder on the line associated with this rulemaking. You may also visit the Docket Management Facility in Room W12–140 on the ground floor of the Department of Transportation West Building, 1200 New Jersey Avenue SE., Washington, DC 20590, between 9 a.m. and 5 p.m., Monday through Friday, except Federal holidays.

3. Privacy Act

Anyone can search the electronic form of comments received into any of our dockets by the name of the individual submitting the comment (or signing the comment, if submitted on behalf of an association, business, labor union, etc.). You may review a Privacy Act notice regarding our public dockets in the January 17, 2008 issue of the **Federal Register** (73 FR 3316).

4. Public Meeting

We do not now plan to hold a public meeting, but you may submit a request for one using one of the four methods specified under **ADDRESSES**. Please explain why you believe a public meeting would be beneficial. If we determine that one would aid this rulemaking, we will hold one at a time and place announced by a later notice in the **Federal Register**.

B. Regulatory History and Information

On April 6, 2007, the Coast Guard published an NPRM for the events that are listed within this regulation and made them available for public comment (72 FR 17062). No comments were received. The Coast Guard followed this NPRM with a final rule on September 27, 2007.

C. Basis and Purpose

This proposed rule will remove 1 marine event and amend 5 annual marine events listed in 33 CFR 100. This proposed rule will amend 33 CFR Part 100 by making updates within the following sections:

33 CFR 100.903, Harborfest Dragon Boat Race; South Haven, MI. The Harborfest Dragon Boat Race is an annual event involving an estimated 250 participants maneuvering self-propelled vessels within a portion of the Black River in South Haven, MI. The organizer for this event submitted an application showing a date that is different from what is currently codified within the CFR. For that reason the Coast Guard proposes to amend 33 CFR 100.903 to reflect an updated effective date for this event of Saturday and Sunday of the 4th weekend of June, from 6 a.m. until 7 p.m.

33 CFR 100.904; Celebrate Americafest; Green Bay, WI. This event will be removed by this proposed rule because it has been codified within 33 CFR 165.929 Safety Zones; Annual events requiring safety zones in the Captain of the Port Lake Michigan zone. The Coast Guard determined from past experience with this event that a safety zone best addresses the safety hazards associated with this event.

33 CFR 100.905; Door County Triathlon; Door County, WI. The swim portion of the Door County Triathlon is expected to involve thousands of participants in the waters of Horseshoe Bay—a portion of Green Bay. As this event is currently listed, the effective date expired on July 23 and 24, 2011. The Coast Guard has spoken with the event organizer and confirmed that this Triathlon is expected to reoccur annually. For that reason, the Coast Guard proposes to amend 33 CFR 100.905 to reflect an updated effective date for this event. Likewise, this rule proposes to amend the location and size of the regulated area for this event. This rule proposes to shrink the size of the regulated area by 1000 yards and move the regulated area into the waters of Horseshoe Bay, some 600 yards southeast of its currently-listed location.

33 CFR 100.906; Grand Haven Coast Guard Festival Waterski Show; Grand Haven, MI. This rule proposes to amend the effective date of this event so that, should the date change, the Coast Guard will give notice to the public of the effective date by Notice of Enforcement.

33 CFR 100.907; Milwaukee River Challenge; Milwaukee, WI.

The Milwaukee River Challenge is a rowing competition involving 40′ and 60′ rowing shells. The event is expected to involve hundreds of participants and spectators. The event organizer for the Milwaukee River Challenge informed the Coast Guard that the Milwaukee River Challenge Race will take place at an earlier time than is currently listed in 33 CFR 100.907. The event organizer further informed the Coast Guard that the rowing shells involved in the Milwaukee River Challenge will race along a portion of the Menomonee River as well as the Milwaukee River. As it is currently listed in 33 CFR 100.907, only the Milwaukee River is named within the ''Regulated Area'' section.

33 CFR 100.909; Chinatown Chamber of Commerce Dragon Boat Race; Chicago, IL. The Chinatown Chamber of Commerce Dragon Boat Race is an annual event involving an estimated 1000 participants maneuvering self-propelled vessels within a portion of the Chicago River in Chicago, IL. The organizer for this event submitted an application showing a date that is different from what is currently codified within the CFR, and is expected to differ in the future. For that reason the Coast Guard proposes to amend 33 CFR 100.909 to reflect an updated effective date for this event of the second Friday and Saturday of July from 11:30 a.m. to 5 p.m.

For each of these events, the Captain of the Port, Lake Michigan, has determined that the likely combination of a race involving a large number of competitors, spectators, and transiting commercial craft in a congested area of water presents significant safety risks. These risks include collisions among

competitor and spectator vessels, injury to swimmers from transiting water craft, capsizing, and drowning.

D. Discussion of Proposed Rule

This proposed rule is intended to ensure safety of life and property on the navigable waters immediately prior to, during, and immediately after regattas or marine parades. This proposed rule will establish restrictions upon, and control the movement of, vessels in a specified area of the Captain of the Port Lake Michigan zone.

The Captain of the Port, Lake Michigan will notify the public of the enforcement of the special local regulations in this proposal by all appropriate means. Such means of notification will include, but are not limited to, Broadcast Notice to Mariners and Local Notice to Mariners. The events within this proposed rule are expected to occur on certain dates each year. Because these dates are subject to change, the Coast Guard will provide notice of any change in date via a Notice of Enforcement. Additionally, the Coast Guard will also provide a notice via a Broadcast Notice to Mariners.

E. Regulatory Analyses

We developed this proposed rule after considering numerous statutes and executive orders related to rulemaking. Below we summarize our analyses based on these statutes or executive orders.

1. Regulatory Planning and Review

This proposed rule is not a significant regulatory action under section 3(f) of Executive Order 12866, Regulatory Planning and Review, as supplemented by Executive Order 13563, Improving Regulation and Regulatory Review, and does not require an assessment of potential costs and benefits under section 6(a)(3) of Executive Order 12866 or under section 1 of Executive Order 13563. The Office of Management and Budget has not reviewed it under those Orders. It is not ''significant'' under the regulatory policies and procedures of the Department of Homeland Security (DHS).

We conclude that this proposed rule is not a significant regulatory action because we anticipate that it will have minimal impact on the economy, will not interfere with other agencies, will not adversely alter the budget of any grant or loan recipients, and will not raise any novel legal or policy issues. The special local regulations established by this proposed rule will be periodic, of short duration, and designed to minimize impact on navigable waters. Thus, restrictions on vessel movement are expected to be minimal. Under certain conditions, moreover, vessels may still transit through the proposed regulated areas when permitted by the Captain of the Port.

2. Impact on Small Entities

The Regulatory Flexibility Act of 1980 (RFA), 5 U.S.C. 601–612, as amended, requires federal agencies to consider the potential impact of regulations on small entities during rulemaking. The term ''small entities'' comprises small businesses, not-for-profit organizations that are independently owned and operated and are not dominant in their fields, and governmental jurisdictions with populations of less than 50,000. The Coast Guard certifies under 5 U.S.C. 605(b) that this proposed rule will not have a significant economic impact on a substantial number of small entities.

This proposed rule would affect the following entities, some of which may be small entities: the owners or operators of vessels intending to transit or anchor in affected waters within the Lake Michigan Zone on the days in which these special local regulations are enforced.

This proposed rule would not have a significant economic impact on a substantial number of small entities for the reasons discussed in the *Regulatory Planning and Review* section above.

If you think that your business, organization, or governmental jurisdiction qualifies as a small entity and that this proposed rule would have a significant economic impact on it, please submit a comment (see **ADDRESSES**) explaining why you think it qualifies and how and to what degree this rule would economically affect it.

3. Assistance for Small Entities

Under section 213(a) of the Small Business Regulatory Enforcement Fairness Act of 1996 (Public Law 104–121), we want to assist small entities in understanding this proposed rule. If the rule would affect your small business, organization, or governmental jurisdiction and you have questions concerning its provisions or options for compliance, please contact the person listed in the **FOR FURTHER INFORMATION CONTACT**, above. The Coast Guard will not retaliate against small entities that question or complain about this proposed rule or any policy or action of the Coast Guard.

4. Collection of Information

This proposed rule would call for no new collection of information under the Paperwork Reduction Act of 1995 (44 U.S.C. 3501–3520).

5. Federalism

A rule has implications for federalism under Executive Order 13132, Federalism, if it has a substantial direct effect on the States, on the relationship between the national government and the States, or on the distribution of power and responsibilities among the various levels of government. We have analyzed this proposed rule under that Order and determined that this rule does not have implications for federalism.

6. Unfunded Mandates Reform Act

The Unfunded Mandates Reform Act of 1995 (2 U.S.C. 1531–1538) requires Federal agencies to assess the effects of their discretionary regulatory actions. In particular, the Act addresses actions that may result in the expenditure by a State, local, or tribal government, in the aggregate, or by the private sector of $100,000,000 (adjusted for inflation) or more in any one year. Though this proposed rule would not result in such an expenditure, we do discuss the effects of this proposed rule elsewhere in this preamble.

7. Taking of Private Property

This proposed rule would not affect a taking of private property or otherwise have taking implications under Executive Order 12630, Governmental Actions and Interference with Constitutionally Protected Property Rights.

8. Civil Justice Reform

This proposed rule meets applicable standards in sections 3(a) and 3(b)(2) of Executive Order 12988, Civil Justice Reform, to minimize litigation, eliminate ambiguity, and reduce burden.

9. Protection of Children From Environmental Health Risks

We have analyzed this proposed rule under Executive Order 13045, Protection of Children from Environmental Health Risks and Safety Risks. This proposed rule is not an economically significant rule and would not create an environmental risk to health or risk to safety that might disproportionately affect children.

10. Indian Tribal Governments

This proposed rule does not have tribal implications under Executive Order 13175, Consultation and Coordination with Indian Tribal Governments, because it does not have a substantial direct effect on one or more Indian tribes, on the relationship between the Federal Government and Indian tribes, or on the distribution of

power and responsibilities between the Federal Government and Indian tribes.

11. Energy Effects

This proposed rule is not a ''significant energy action'' under Executive Order 13211, Actions Concerning Regulations That Significantly Affect Energy Supply, Distribution, or Use.

12. Technical Standards

This proposed rule does not use technical standards. Therefore, we did not consider the use of voluntary consensus standards.

13. Environment

We have analyzed this proposed rule under Department of Homeland Security Management Directive 023–01 and Commandant Instruction M16475.lD, which guide the Coast Guard in complying with the National Environmental Policy Act of 1969 (NEPA)(42 U.S.C. 4321–4370f), and have made a determination that this action is one of a category of actions that do not individually or cumulatively have a significant effect on the human environment. This rule involves the establishment of special local regulations issued in conjunction with a regatta or marine parade, and, therefore it is categorically excluded from further review under paragraph 34(h) of Figure 2–1 of the Commandant Instruction. An environmental analysis checklist supporting this determination and a Categorical Exclusion Determination are available in the docket where indicated under **ADDRESSES**. We seek any comments or information that may lead to the discovery of a significant environmental impact from this proposed rule.

List of Subjects in 33 CFR Part 100

Marine safety, Navigation (water), Reporting and recordkeeping requirements, Waterways.

For the reasons discussed in the preamble, the Coast Guard proposes to amend 33 CFR part 100 as follows:

PART 100—SAFETY OF LIFE ON NAVIGABLE WATERS

■ 1. The authority citation for part 100 continues to read as follows:

Authority: 33 U.S.C. 1233.

■ 2. Revise § 100.903 to read as follows:

§ 100.903 Harborfest Dragon Boat Race; South Haven, MI.

(a) *Regulated Area.* A regulated area is established on the Black River in South Haven, MI within the following coordinates starting at 42°24′13.6″ N, 086°16′41″ W; then southeast 42°24′12.6″ N, 086°16′40″ W; then northeast to 42°24′19.2″ N, 086°16′26.5″ W; then northwest to 42°24′20.22″ N, 086°16′27.4″ W; then back to point of origin. (NAD 83).

(b) *Special Local Regulations.* The regulations of § 100.901 apply. No vessel may enter, transit through, or anchor within the regulated area without the permission of the Coast Guard Patrol Commander.

(c) *Effective Date.* These regulations are effective annually on the Saturday and Sunday of the 4th weekend of June, from 6 a.m. until 7 p.m. The time and date for this event are subject to change. In the event of a schedule change, the Coast Guard will issue a Notice of Enforcement with the exact date and time that this regulated area will be enforced.

■ 3. Remove and reserve § 100.904

■ 4. Revise § 100.905 to read as follows:

§ 100.905 Door County Triathlon; Door County, WI.

(a) *Regulated Area.* A regulated area is established to include all waters of Horseshoe Bay within a 1000-yard radius from a position at 45°00′52.6″ N, 087°20′6.7″ W. (NAD 83).

(b) *Special Local Regulations.* The regulations of § 100.901 apply. No vessel may enter, transit through, or anchor within the regulated area without the permission of the Coast Guard Patrol Commander.

(c) *Effective Date.* These regulations are effective annually on the Saturday and Sunday of the third weekend of July; from 7 a.m. to 10 a.m. The time and date for this event are subject to change. In the event of a schedule change, the Coast Guard will issue a Notice of Enforcement with the exact date and time that this regulated area will be enforced.

■ 5. Revise § 100.906 to read as follows:

§ 100.906 Grand Haven Coast Guard Festival Waterski Show, Grand Haven, MI.

(a) *Regulated Area.* All waters of the Grand River at Waterfront Stadium from approximately 350 yards upriver to 150 yards downriver of Grand River Lighted Buoy 3A (Lightlist number 19000) within the following coordinates: 43°04′ N, 086°14′12″ W; then east to 43°03′56″ N, 086°14′4″ W; then south to 43°03′45″ N, 086°14′10″ W; then west to 43°03′48″ N, 086°14′17″ W; then back to the point of origin. (NAD 83).

(b) *Special Local Regulations.* The regulations of § 100.901 apply. No vessel may enter, transit through, or anchor within the regulated area without the permission of the Coast Guard Patrol Commander.

(c) *Effective Date.* These regulations are effective annually the Tuesday before the first Saturday in August; 7 p.m. to 9 p.m. The time and date for this event are subject to change. In the event of a schedule change, the Coast Guard will issue a Notice of Enforcement with the exact date and time that this regulated area will be enforced.

■ 6. Revise § 100.907 to read as follows:

§ 100.907 Milwaukee River Challenge; Milwaukee, WI.

(a) *Regulated Area.* All waters of the Milwaukee River from the junction with the Menomonee River at position 43°01′54.9″ N, 087°54′37.6″ W to the East Pleasant St. Bridge at position 43°03′5.7″ N, 087°54′28.1″ W (NAD 83). All waters of the Menomonee River from the North 25th St. Bridge at position 43°01′57.4″ N, 087°56′40.9″ W to the junction with the Milwaukee River (NAD 83).

(b) *Special Local Regulations.* The regulations of § 100.901 apply. No vessel may enter, transit through, or anchor within the regulated area without the permission of the Coast Guard Patrol Commander.

(c) *Effective date.* These regulations are effective annually on the third Saturday of September; from 8:00 a.m. to 4:00 p.m. The time and date for this event are subject to change. In the event of a schedule change, the Coast Guard will issue a Notice of Enforcement with the exact date and time that this regulated area will be enforced.

■ 7. Revise § 100.909 to read as follows:

§ 100.909 Chinatown Chamber of Commerce Dragon Boat Race; Chicago, IL.

(a) *Regulated Area.* All waters of the South Branch of the Chicago River from the West 18th Street Bridge at position 41°51′28″ N, 087°38′06″ W to the Amtrak Bridge at position 41°51′20″ N, 087°38′13″ W. (NAD 83).

(b) *Special Local Regulations.* The regulations of § 100.901 apply. No vessel may enter, transit through, or anchor within the regulated area without the permission of the Coast Guard Patrol Commander.

(c) *Effective Date.* These regulations are effective annually on the second Friday and Saturday of July from 11:30 a.m. to 5 p.m. The time and date for this event are subject to change. In the event of a schedule change, the Coast Guard will issue a Notice of Enforcement with the exact date and time that this regulated area will be enforced.

Dated: May 24, 2013.

M.W. Sibley,

Captain, U.S. Coast Guard, Captain of the Port, Lake Michigan.

[FR Doc. 2013–14116 Filed 6–13–13; 8:45 am]

BILLING CODE 9110–04–P

DEPARTMENT OF HOMELAND SECURITY

Coast Guard

33 CFR Part 165

[Docket No. USCG–2012–0730]

RIN 1625–AA00

Safety Zones; Revolution 3 Triathlon, Lake Erie, Sandusky Bay, Cedar Point, OH

AGENCY: Coast Guard, DHS.

ACTION: Notice of proposed rulemaking.

SUMMARY: The Coast Guard proposes establishing two permanent safety zones on Lake Erie near Sandusky, OH. This action is necessary to provide for the safety of life and property on navigable waters and is intended to restrict vessel traffic during the swim portion of the Revolution 3 Triathlon, Lake Erie, Sandusky Bay, OH.

DATES: Comments and related materials must be received by the Coast Guard on or before July 15, 2013.

ADDRESSES: You may submit comments identified by docket number USCG–2012–0730 using any one of the following methods:

Federal eRulemaking Portal: http://www.regulations.gov.

Fax: 202–493–2251.

Mail or Delivery: Docket Management Facility (M–30), U.S. Department of Transportation, West Building Ground Floor, Room W12–140, 1200 New Jersey Avenue SE., Washington, DC 20590–0001. Deliveries are accepted between 9 a.m. and 5 p.m., Monday through Friday, except Federal holidays. The telephone number is 202–366–9329.

See the ''Public Participation and Request for Comments'' portion of the **SUPPLEMENTARY INFORMATION** section below for instructions on submitting comments. To avoid duplication, please use only one of these four methods.

FOR FURTHER INFORMATION CONTACT: If you have questions on this proposed rule, call or email LTJG Benjamin Nessia, Response Department, Marine Safety Unit Toledo, Coast Guard; telephone (419) 418–6040, email *Benjamin.B.Nessia@uscg.mil.* If you have questions on viewing or submitting material to the docket, call Barbara Hairston, Program Manager, Docket Operations, telephone 202–366–9826.

SUPPLEMENTARY INFORMATION:

Table of Acronyms

DHS Department of Homeland Security
FR Federal Register
NPRM Notice of Proposed Rulemaking

A. Public Participation and Information

We encourage you to participate in this rulemaking by submitting comments and related materials. All comments received will be posted without change to *http://www.regulations.gov* and will include any personal information you have provided.

1. Submitting Comments

If you submit a comment, please include the docket number for this rulemaking, indicate the specific section of this document to which each comment applies, and provide a reason for each suggestion or recommendation. You may submit your comments and material online (via *http://www.regulations.gov*) or by fax, mail or hand delivery, but please use only one of these means. If you submit a comment online via *www.regulations.gov,* it will be considered received by the Coast Guard when the comment is successfully transmitted. A comment submitted via fax, hand delivery, or mail, will be considered as having been received by the Coast Guard when the comment is received at the Docket Management Facility. We recommend that you include your name and a mailing address, an email address, or a telephone number in the body of your document so that we can contact you if we have questions regarding your submission.

To submit your comment online, go to *http://www.regulations.gov,* type the docket number in the ''SEARCH'' box and click ''SEARCH.'' Click on ''Submit a Comment'' on the line associated with this rulemaking.

If you submit your comments by mail or hand delivery, submit them in an unbound format, no larger than 8½; by 11 inches, suitable for copying and electronic filing. If you submit comments by mail and would like to know that they reached the Facility, please enclose a stamped, self-addressed postcard or envelope. We will consider all comments and material received during the comment period and may change the rule based on your comments.

2. Viewing Comments and Documents

To view comments, as well as documents mentioned in this preamble as being available in the docket, go to *http://www.regulations.gov,* type the docket number in the ''SEARCH'' box and click ''SEARCH.'' Click on ''OPEN DOCKET FOLDER'' on the line associated with this rulemaking. You may also visit the Docket Management Facility in Room W12–140 on the ground floor of the Department of Transportation West Building, 1200 New Jersey Avenue SE., Washington, DC 20590, between 9 a.m. and 5 p.m., Monday through Friday, except Federal holidays.

3. Privacy Act

Anyone can search the electronic form of comments received into any of our dockets by the name of the individual submitting the comment (or signing the comment, if submitted on behalf of an association, business, labor union, etc.). You may review a Privacy Act notice regarding our public dockets in the January 17, 2008, issue of the **Federal Register** (73 FR 3316).

4. Public Meeting

We do not now plan to hold a public meeting, but you may submit a request for one using one of the four methods specified under **ADDRESSES**. Please explain why you believe a public meeting would be beneficial. If we determine that one would aid this rulemaking, we will hold one at a time and place announced by a later notice in the **Federal Register**.

B. Regulatory History and Information

The Coast Guard published temporary final rules (TFRs) in the **Federal Register** for this event on September 13, 2010 (75 FR 55477), and September 8, 2011 (76 FR 55564). Because this event will recur annually, the Captain of the Port Detroit is proposing to establish a permanent safety zone and thus, alleviate the need to publish TFRs in the future.

C. Basis and Purpose

Each year, the Revolution 3 Triathlon occurs at Cedar Point near Sandusky, OH. This event occurs each year for two consecutive days during the first or second week of September. During the first leg of the event, participants enter the water and swim along a pre-determined course. While the primary course is on the eastern side of Cedar Point, an alternate location is on the western side of Cedar Point, in the vicinity of the Cedar Point Marina. The likely combination of large numbers of inexperienced recreational boaters,

possibly varying lake conditions and large number of swimmers in the water could easily result in serious injuries or fatalities. The Captain of the Port Detroit proposes to establish this permanent safety to protect against such injuries and fatalities.

D. Discussion of Proposed Rule

As suggested above, this proposed regulation is intended to ensure safety of the public and vessels during the Revolution 3 triathlon. This proposed rule will become effective 30 days after the final rule is published in the **Federal Register**. However, the safety zones will only be enforced annually for two consecutive days during the first or second week of September from 6:50 a.m. until 10 a.m., with exact dates to be determined annually.

The proposed safety zones for the Revolution 3 Triathlon, Lake Erie, Sandusky Bay, Cedar Point, OH, will encompass all waters of Lake Erie, Sandusky Bay, Cedar Point, OH within the swim courses located at position 41–29′–00.04″ N 082–40′–48.16″ W to 41–29′–19.28″ N 082–40′–38.97″ W to 41–29′–02.51″ N 082–40′–20.82″ W to 41–28′–45.52″ N 082–40′–35.75″ W then following the shoreline to the point of origin. These coordinates are North American Datum of 1983 (NAD 83). In the event that weather requires changing locations an alternate race course site will encompass all waters of Lake Erie, Sandusky Bay, Cedar Point, OH extending outward 100 yards on either side of a line running between 41–28′–38.59″ N 082–41′–10.51″ W and 41–28′–17.25″ N 082–40′–54.09″ W running adjacent to the Cedar Point Marina. These coordinates are North American Datum of 1983 (NAD 83).

The Captain of the Port Detroit will use all appropriate means to notify the public when the safety zones in this proposal will be enforced. Consistent with 33 CFR 165.7(a), such means of may include, among other things, publication in the **Federal Register**, Broadcast Notice to Mariners, Local Notice to Mariners, or, upon request, by facsimile (fax). Also, the Captain of the Port will issue a Broadcast Notice to Mariners notifying the public if enforcement these safety zones in this section are cancelled prematurely.

Entry into, transiting, or anchoring within the proposed safety zones during the period of enforcement is prohibited unless authorized by the Captain of the Port Detroit, or his designated representative. The Captain of the Port or his designated representative may be contacted via VHF Channel 16.

E. Regulatory Analyses

We developed this proposed rule after considering numerous statutes and executive orders related to rulemaking. Below we summarize our analyses based on these statutes or executive orders.

1. Regulatory Planning and Review

This proposed rule is not a significant regulatory action under section 3(f) of Executive Order 12866, Regulatory Planning and Review, and does not require an assessment of potential costs and benefits under section 6(a)(3) of that Order. The Office of Management and Budget has not reviewed it under that Order. It is not ''significant'' under the regulatory policies and procedures of the Department of Homeland Security (DHS). We conclude that this proposed rule is not a significant regulatory action because we anticipate that it will have minimal impact on the economy, will not interfere with other agencies, will not adversely alter the budget of any grant or loan recipients, and will not raise any novel legal or policy issues. The safety zones established by this proposed rule will be relatively small and enforced for relatively short time. Also, each safety zone is designed to minimize its impact on navigable waters. Furthermore, each safety zone has been designed to allow vessels to transit unrestricted to portions of the waterways not affected by the safety zones. Thus, restrictions on vessel movements within any particular area are expected to be minimal. Under certain conditions, moreover, vessels may still transit through each safety zone when permitted by the Captain of the Port. On the whole, the Coast Guard expects insignificant adverse impact to mariners from the activation of these safety zones.

2. Impact on Small Entities

Under the Regulatory Flexibility Act (5 U.S.C. 601–612), we have considered whether this proposed rule would have a significant economic impact on a substantial number of small entities. The term ''small entities'' comprises small businesses, not-for-profit organizations that are independently owned and operated and are not dominant in their fields, and governmental jurisdictions with populations of less than 50,000.

The Coast Guard certifies under 5 U.S.C. 605(b) that this proposed rule would not have a significant economic impact on a substantial number of small entities.

This proposed rule would affect the following entities, some of which might be small entities: The owners and operators of vessels intending to transit or anchor in the above portions of Lake Erie during the period that either of the proposed safety zones is being enforced.

These proposed safety zones will not have a significant economic impact on a substantial number of small entities for all of the reasons discussed in the above Regulatory Planning and Review section. If you think that your business, organization, or governmental jurisdiction qualifies as a small entity and that this proposed rule would have a significant economic impact on it, please submit a comment (see **ADDRESSES**) explaining why you think it qualifies and how and to what degree this rule would economically affect it.

3. Assistance for Small Entities

Under section 213(a) of the Small Business Regulatory Enforcement Fairness Act of 1996 (Pub. L. 104–121), we want to assist small entities in understanding this proposed rule so that they can better evaluate its effects on them and participate in the rulemaking process. If this proposed rule would affect your small business, organization, or governmental jurisdiction and you have questions concerning its provisions or options for compliance, please contact LTJG Benjamin Nessia, Response Department, Marine Safety Unit Toledo, Coast Guard; telephone (419)418–6040, email *Benjamin.B.Nessia@uscg.mil.* The Coast Guard will not retaliate against small entities that question or complain about this proposed rule or any policy or action of the Coast Guard.

4. Collection of Information

This proposed rule would call for no new collection of information under the Paperwork Reduction Act of 1995 (44 U.S.C. 3501–3520).

5. Federalism

A rule has implications for federalism under Executive Order 13132, Federalism, if it has a substantial direct effect on State or local governments and would either preempt State law or impose a substantial direct cost of compliance on them. We have analyzed this proposed rule under that Order and have determined that it does not have implications for federalism.

6. Unfunded Mandates Reform Act

The Unfunded Mandates Reform Act of 1995 (2 U.S.C. 1531–1538) requires Federal agencies to assess the effects of their discretionary regulatory actions. In particular, the Act addresses actions that may result in the expenditure by a State, local, or tribal government, in the

aggregate, or by the private sector of $100,000,000 (adjusted for inflation) or more in any one year. Though this proposed rule would not result in such an expenditure, we do discuss the effects of this proposed rule elsewhere in this preamble.

7. Taking of Private Property

This proposed rule would not affect a taking of private property or otherwise have taking implications under Executive Order 12630, Governmental Actions and Interference with Constitutionally Protected Property Rights.

8. Civil Justice Reform

This proposed rule meets applicable standards in sections 3(a) and 3(b)(2) of Executive Order 12988, Civil Justice Reform, to minimize litigation, eliminate ambiguity, and reduce burden.

9. Protection of Children

We have analyzed this proposed rule under Executive Order 13045, Protection of Children from Environmental Health Risks and Safety Risks. This proposed rule is not an economically significant rule and would not create an environmental risk to health or risk to safety that might disproportionately affect children.

10. Indian Tribal Governments

This proposed rule does not have tribal implications under Executive Order 13175, Consultation and Coordination with Indian Tribal Governments, because it does not have a substantial direct effect on one or more Indian tribes, on the relationship between the Federal Government and Indian tribes, or on the distribution of power and responsibilities between the Federal Government and Indian tribes.

11. Energy Effects

We have analyzed this proposed rule under Executive Order 13211, Actions Concerning Regulations That Significantly Affect Energy Supply, Distribution, or Use. We have determined that it is not a ''significant energy action'' under that order because it is not a ''significant regulatory action'' under Executive Order 12866 and is not likely to have a significant adverse effect on the supply, distribution, or use of energy. The Administrator of the Office of Information and Regulatory Affairs has not designated it as a significant energy action. Therefore, it does not require a Statement of Energy Effects under Executive Order 13211.

12. Technical Standards

The National Technology Transfer and Advancement Act (NTTAA) (15 U.S.C. 272 note) directs agencies to use voluntary consensus standards in their regulatory activities unless the agency provides Congress, through the Office of Management and Budget, with an explanation of why using these standards would be inconsistent with applicable law or otherwise impractical. Voluntary consensus standards are technical standards (e.g., specifications of materials, performance, design, or operation; test methods; sampling procedures; and related management systems practices) that are developed or adopted by voluntary consensus standards bodies.

This proposed rule does not use technical standards. Therefore, we did not consider the use of voluntary consensus standards.

13. Environment

We have analyzed this proposed rule under Department of Homeland Security Management Directive 023–01 and Commandant Instruction M16475.lD, which guide the Coast Guard in complying with the National Environmental Policy Act of 1969 (NEPA) (42 U.S.C. 4321–4370f), and have made a preliminary determination that this action is one of a category of actions which do not individually or cumulatively have a significant effect on the human environment. This proposed rule involves the establishment of safety zones and thus, is categorically excluded under paragraph (34)(g) of the Instruction. A preliminary environmental analysis checklist supporting this determination is available in the docket where indicated under **ADDRESSES**. We seek any comments or information that may lead to the discovery of a significant environmental impact from this proposed rule.

List of Subjects in 33 CFR Part 165

Harbors, Marine safety, Navigation (water), Reporting and recordkeeping requirements, Security measures, Waterways.

For the reasons discussed in the preamble, the Coast Guard proposes to amend 33 CFR part 165 as follows:

PART 165—REGULATED NAVIGATION AREAS AND LIMITED ACCESS AREAS

■ 1. The authority citation for part 165 continues to read as follows:

Authority: 33 U.S.C. 1231; 46 U.S.C. Chapters 701, 3306, 3703; 50 U.S.C. 191, 195; 33 CFR 1.05–1, 6.04–1, 6.04–6, and 160.5; Pub. L. 107–295, 116 Stat. 2064; Department of Homeland Security Delegation No. 0170.1.

■ 2. Add § 165.917 to read as follows:

§ 165.917 Safety Zones; Annual Swim Events in the Captain of the Port Detroit Zone

(a) Location. The following locations are designated as safety zones: All waters of Lake Erie within positions 41–29′–00.04″ N 082–40′–48.16″ W to 41–29′–19.28″ N 082–40′–38.97″ W to 41–29′–02.51″ N 082–40′–20.82″ W to 41–28′–45.52″ N 082–40′–35.75″ W then following the shoreline to the point of origin. In the event that weather requires changing locations an alternate race course site will encompass all waters of Lake Erie, Sandusky Bay, Cedar Point, OH extending outward 100 yards on either side of a line running between 41–28′–38.59″ N 082–41′–10.51″ W and 41–28′–17.25″ N 082–40′–54.09″ W running adjacent to the Cedar Point Marina. These coordinates are North American Datum of 1983 (NAD 83).

(b) Enforcement Period. These safety zones will be enforced two consecutive mornings during the first or second week in September. Exact dates and times will be determined annually and published annually in the **Federal Register** via a Notice of Enforcement.

(c) Definitions. The following definitions apply to this section:

(1) ''On-scene Representative'' means any Coast Guard Commissioned, warrant, or petty officer designated by the Captain of the Port Detroit to monitor a safety zone, permit entry into the zone, give legally enforceable orders to persons or vessels within the zones, and take other actions authorized by the Captain of the Port.

(2) ''Public vessel'' means vessels owned, chartered, or operated by the United States, or by a State or political subdivision thereof.

(d) Regulations.

(1) In accordance with the general regulations in § 165.23 of this part, entry into, transiting, or anchoring within this safety zone is prohibited unless authorized by the Captain of the Port Detroit, or his designated representative.

(2) These safety zones are closed to all vessel traffic, excepted as may be permitted by the Captain of the Port Detroit or his designated representative. All persons and vessels must comply with the instructions of the Coast Guard Captain of the Port or his designated representative. Upon being hailed by the U.S. Coast Guard by siren, radio, flashing light or other means, the operator of a vessel shall proceed as directed.

(3) All vessels must obtain permission from the Captain of the Port or his

designated representative to enter, move within, or exit the safety zone established in this section when this safety zone is enforced. Vessels and persons granted permission to enter the safety zone must obey all lawful orders or directions of the Captain of the Port or a designated representative. While within a safety zone, all vessels must operate at the minimum speed necessary to maintain a safe course.

(e) Exemption. Public vessels, as defined in paragraph (b) of this section, are exempt from the requirements in this section.

(f) Waiver. For any vessel, the Captain of the Port Detroit or his designated representative may waive any of the requirements of this section, upon finding that operational conditions or other circumstances are such that application of this section is unnecessary or impractical for the purposes of public or environmental safety.

(g) Notification. The Captain of the Port Detroit will notify the public that the safety zones in this section are or will be enforced by all appropriate means to the affected segments of the public including publication in the **Federal Register** as practicable, in accordance with 33 CFR 165.7(a). Such means of notification may also include, but are not limited to Broadcast Notice to Mariners or Local Notice to Mariners.

The Captain of the Port will issue a Broadcast Notice to Mariners notifying the public when enforcement of the safety zone is cancelled.

Dated: May 28, 2013.

J.E. Ogden,

Captain, U.S. Coast Guard, Captain of the Port Detroit.

[FR Doc. 2013–14119 Filed 6–13–13; 8:45 am]

BILLING CODE 9110–04–P

DEPARTMENT OF HOMELAND SECURITY

Coast Guard

33 CFR Part 165

[Docket No. USCG–2013–0060]

RIN 1625–AA00

Safety Zones; Recurring Events in Captain of the Port Boston Zone

AGENCY: Coast Guard, DHS.

ACTION: Notice of proposed rulemaking.

SUMMARY: The Coast Guard proposes to add three new permanent safety zones to the Coast Guard Captain of the Port Boston Zone annual recurring marine events. When activated and subject to enforcement, these permanent safety zones would restrict vessels from portions of water areas during annual recurring events. These three permanent safety zones would expedite public notification of these annual recurring events, and ensure the protection of the maritime public and event participants from the hazards associated with these annual recurring events.

DATES: Comments and related material must be received by the Coast Guard on or before July 15, 2013. Requests for public meetings must be received by the Coast Guard on or before July 5, 2013.

ADDRESSES: You may submit comments identified by docket number USCG–2013–0060 using any one of the following methods:

(1) *Federal eRulemaking Portal: http://www.regulations.gov.*

(2) *Fax:* 202–493–2251.

(3) *Mail:* Docket Management Facility (M–30), U.S. Department of Transportation, West Building Ground Floor, Room W12–140, 1200 New Jersey Avenue SE., Washington, DC 20590–0001.

(4) *Hand delivery:* Same as mail address above, between 9 a.m. and 5 p.m., Monday through Friday, except Federal holidays. The telephone number is 202–366–9329.

To avoid duplication, please use only one of these four methods. See the ''Public Participation and Request for Comments'' portion of the **SUPPLEMENTARY INFORMATION** section below for instructions on submitting comments.

FOR FURTHER INFORMATION CONTACT: If you have questions on this rule, call or email Mr. Mark Cutter, Coast Guard Sector Boston Waterways Management Division, telephone 617–223–4000, email *Mark.E.Cutter@uscg.mil.* If you have questions on viewing or submitting material to the docket, call Barbara Hairston, Program Manager, Docket Operations, telephone 202–366–9826.

SUPPLEMENTARY INFORMATION:

Table of Acronyms

DHS Department of Homeland Security
FR Federal Register
NPRM Notice of Proposed Rulemaking
COTP Captain of the Port

A. Public Participation and Request for Comments

We encourage you to participate in this rulemaking by submitting comments and related materials. All comments received will be posted without change to *http://www.regulations.gov* and will include any personal information you have provided.

1. Submitting Comments

If you submit a comment, please include the docket number for this rulemaking (USCG–2013–0060), indicate the specific section of this document to which each comment applies, and provide a reason for each suggestion or recommendation. You may submit your comments and material online (via *http://www.regulations.gov*) or by fax, mail, or hand delivery, but please use only one of these means. If you submit a comment online via *www.regulations.gov,* it will be considered received by the Coast Guard when you successfully transmit the comment. If you fax, hand deliver, or mail your comment, it will be considered as having been received by the Coast Guard when it is received at the Docket Management Facility. We recommend that you include your name and a mailing address, an email address, or a telephone number in the body of your document so that we can contact you if we have questions regarding your submission.

To submit your comment online, go to *http://www.regulations.gov,* click on the ''submit a comment'' box, which will then become highlighted in blue. In the ''Document Type'' drop down menu select ''Proposed Rule'' and insert ''USCG–2013–0060'' in the ''Keyword'' box. Click ''Search'' then click on the balloon shape in the ''Actions'' column. If you submit your comments by mail or hand delivery, submit them in an unbound format, no larger than 8½ by 11 inches, suitable for copying and electronic filing. If you submit comments by mail and would like to know that they reached the Facility, please enclose a stamped, self-addressed postcard or envelope. We will consider all comments and material received during the comment period and may change the rule based on your comments.

2. Viewing Comments and Documents

To view comments, as well as documents mentioned in this preamble as being available in the docket, go to *http://www.regulations.gov,* click on the ''read comments'' box, which will then become highlighted in blue. In the ''Keyword'' box insert ''USCG–2013–0060'' and click ''Search.'' Click the ''Open Docket Folder'' in the ''Actions'' column. You may also visit the Docket Management Facility in Room W12–140 on the ground floor of the Department of Transportation West Building, 1200 New Jersey Avenue SE., Washington, DC 20590, between 9 a.m. and 5 p.m., Monday through Friday, except Federal

holidays. We have an agreement with the Department of Transportation to use the Docket Management Facility.

3. Privacy Act

Anyone can search the electronic form of comments received into any of our dockets by the name of the individual submitting the comment (or signing the comment, if submitted on behalf of an association, business, labor union, etc.). You may review a Privacy Act notice regarding our public dockets in the January 17, 2008, issue of the **Federal Register** (73 FR 3316).

4. Public Meeting

We do not now plan to hold a public meeting. But you may submit a request for one using one of the four methods specified under **ADDRESSES**. Please explain why you believe a public meeting would be beneficial. If we determine that one would aid this rulemaking, we will hold one at a time and place announced by a later notice in the **Federal Register**.

B. Basis and Purpose

The legal basis for the proposed rule is 33 U.S.C. 1231, 1233; 46 U.S.C. Chapter 701, 3306, 3703; 50 U.S.C. 191, 195; 33 CFR 1.05–1, and 160.5; Pub. L. 107–295, 116 Stat. 2064; and Department of Homeland Security Delegation No. 0170.1, which collectively authorize the Coast Guard to define regulatory safety zones.

This rulemaking would update the table of existing permanent safety zones in order to meet the Coast Guard's intended purpose of ensuring safety during these annual recurring events.

C. Discussion of Proposed Rule

The Coast Guard proposes to add three new permanent safety zones to 33 CFR 165.118 (Safety Zones). The proposed rule would update the list of annual recurring events in the existing regulation found in 33 CFR 165.118 for the Coast Guard Captain of the Port (COTP) Boston Zone with the addition of the following three new permanent safety zones; (6.5) Hull Youth Football Carnival Fireworks, (8.8) The Boston Triathlon, and (9.7) Boston Harbor Sharkfest Swim. As in the original rule, the amended TABLE provides the event name, sponsor, and type, as well as approximate times, dates, and locations of the events. All regulatory details, including public notification procedures, remain the same as published in the original rule.

D. Regulatory Analyses

We developed this proposed rule after considering numerous statutes and executive orders related to rulemaking. Below we summarize our analyses based on 13 of these statutes or executive orders.

1. Executive Order 12866 and Executive Order 13563

This proposed rule is not a significant regulatory action under section 3(f) of Executive Order 12866, Regulatory Planning and Review, as supplemented by Executive Order 13563, and does not require an assessment of potential costs and benefits under section 6(a)(3) of that Order. The Office of Management and Budget has not reviewed it under that Order.

We expect the economic impact of this proposed rule to be minimal. Although this regulation may have some impact on the public, the potential impact will be minimized for the following reasons: the Coast Guard is only modifying an existing regulation to account for new information.

2. Small Entities

Under the Regulatory Flexibility Act (5 U.S.C. 601–612), we have considered whether this proposed rule would have a significant economic impact on a substantial number of small entities. The term ''small entities'' comprises small businesses, not-for-profit organizations that are independently owned and operated and are not dominant in their fields, and governmental jurisdictions with populations of less than 50,000.

The Coast Guard certifies under 5 U.S.C. 605(b) that this proposed rule would not have a significant economic impact on a substantial number of small entities. This proposed rule would affect the following entities, some of which might be small entities: owners or operators of vessels intending to transit, fish, or anchor in the areas where the listed annual recurring events are being held.

The proposed rule would not have a significant economic impact on a substantial number of small entities for the same reasons outlined in the original rule. In addition, this action is only modifying an existing rule which, in and of itself, did not have a significant impact on a substantial number of small entities.

If you think that your business, organization, or governmental jurisdiction qualifies as a small entity and that this rule would have a significant economic impact on it, please submit a comment (see **ADDRESSES**) explaining why you think it qualifies and how and to what degree this rule would economically affect it.

3. Assistance for Small Entities

Under section 213(a) of the Small Business Regulatory Enforcement Fairness Act of 1996 (Pub. L. 104–121), we want to assist small entities in understanding this proposed rule so that they can better evaluate its effects on them and participate in the rulemaking. If the rule would affect your small business, organization, or governmental jurisdiction and you have questions concerning its provisions or options for compliance, please contact the person listed under **FOR FURTHER INFORMATION CONTACT**. The Coast Guard will not retaliate against small entities that question or complain about this proposed rule or any policy or action of the Coast Guard.

4. Collection of Information

This proposed rule would call for no new collection of information under the Paperwork Reduction Act of 1995 (44 U.S.C. 3501–3520.).

5. Federalism

A rule has implications for federalism under Executive Order 13132, Federalism, if it has a substantial direct effect on State or local governments and would either preempt State law or impose a substantial direct cost of compliance on them. We have analyzed this proposed rule under that Order and have determined that it does not have implications for federalism.

6. Protest Activities

The Coast Guard respects the First Amendment rights of protesters. Protesters are asked to contact the person listed in the **FOR FURTHER INFORMATION CONTACT** section to coordinate protest activities so that your message can be received without jeopardizing the safety or security of people, places or vessels.

7. Unfunded Mandates Reform Act

The Unfunded Mandates Reform Act of 1995 (2 U.S.C. 1531–1538) requires Federal agencies to assess the effects of their discretionary regulatory actions. In particular, the Act addresses actions that may result in the expenditure by a State, local, or tribal government, in the aggregate, or by the private sector of $100,000,000 (adjusted for inflation) or more in any one year. Though this proposed rule would not result in such an expenditure, we do discuss the effects of this rule elsewhere in this preamble.

8. Taking of Private Property

This proposed rule would not cause a taking of private property or otherwise have taking implications under

Executive Order 12630, Governmental Actions and Interference with Constitutionally Protected Property Rights.

9. Civil Justice Reform

This proposed rule meets applicable standards in sections 3(a) and 3(b)(2) of Executive Order 12988, Civil Justice Reform, to minimize litigation, eliminate ambiguity, and reduce burden.

10. Protection of Children

We have analyzed this proposed rule under Executive Order 13045, Protection of Children from Environmental Health Risks and Safety Risks. This rule is not an economically significant rule and would not create an environmental risk to health or risk to safety that might disproportionately affect children.

11. Indian Tribal Governments

This proposed rule does not have tribal implications under Executive Order 13175, Consultation and Coordination with Indian Tribal Governments, because it would not have a substantial direct effect on one or more Indian tribes, on the relationship between the Federal Government and Indian tribes, or on the distribution of power and responsibilities between the Federal Government and Indian tribes.

12. Energy Effects

We have analyzed this proposed rule under Executive Order 13211, Actions Concerning Regulations That Significantly Affect Energy Supply, Distribution, or Use. We have determined that it is not a ''significant energy action'' under that order because it is not a ''significant regulatory action'' under Executive Order 12866 and is not likely to have a significant adverse effect on the supply, distribution, or use of energy. The Administrator of the Office of Information and Regulatory Affairs has not designated it as a significant energy action. Therefore, it does not require a Statement of Energy Effects under Executive Order 13211.

13. Technical Standards

The National Technology Transfer and Advancement Act (NTTAA) (15 U.S.C. 272 note) directs agencies to use voluntary consensus standards in their regulatory activities unless the agency provides Congress, through the Office of Management and Budget, with an explanation of why using these standards would be inconsistent with applicable law or otherwise impractical. Voluntary consensus standards are technical standards (e.g., specifications of materials, performance, design, or operation; test methods; sampling procedures; and related management systems practices) that are developed or adopted by voluntary consensus standards bodies.

This proposed rule does not use technical standards. Therefore, we did not consider the use of voluntary consensus standards.

14. Environment

We have analyzed this proposed rule under Department of Homeland Security Management Directive 023–01 and Commandant Instruction M16475.lD, which guide the Coast Guard in complying with the National Environmental Policy Act of 1969 (NEPA)(42 U.S.C. 4321–4370f), and have made a preliminary determination that this action may be one of a category of actions that do not individually or cumulatively have a significant effect on the human environment.

A preliminary environmental analysis checklist supporting this determination will be available in the docket where indicated under **ADDRESSES**. This proposed rule involves water activities including swimming events and fireworks displays. This rule may be categorically excluded, under figure 2–1, paragraph (34)(g) of the Instruction.

We seek any comments or information that may lead to the discovery of a significant environmental impact from this proposed rule.

List of Subjects in 33 CFR Part 165

Harbors, Marine Safety, Navigation (water), Reporting and recordkeeping requirements, Security measures, and Waterways.

For the reasons discussed in the preamble, the Coast Guard proposes to amend 33 CFR part 165 as follows:

PART 165—REGULATED NAVIGATION AREAS AND LIMITED ACCESS AREAS

■ 1. The authority citation for Part 165 continues to read as follows:

Authority: 33 U.S.C. 1231; 46 U.S.C. Chapter 701, 3306, 3703; 33 CFR 1.05–1, and 160.5; Pub. L. 107–295, 116 Stat. 2064; Department of Homeland Security Delegation No. 0170.1.

■ 2. Revise TABLE 1 to § 165.118 to read as follows:

§ 165.118 Safety Zones; recurring annual events held in Coast Guard Sector Boston Captain of the Port Zone.

* * * * *

TABLE 1

6.0	JUNE
6.1 Sand and Sea Festival Fireworks	• Event Type: Fireworks Display. • Sponsor: Salisbury Beach Partnership, Inc. • Date: A one-night event on Saturday during the last weekend of June, as specified in the USCG District 1 Local Notice to Mariners. • Time: 10:00 pm to 10:30 pm. • Location: All waters of the Atlantic Ocean near Salisbury Beach within a 350-yard radius of the fireworks launch site located at position 42°50.6′ N, 70°48.4′ W (NAD 83).
6.2 St. Peter's Fiesta Fireworks	• Event Type: Fireworks Display. • Sponsor: St. Peters Fiesta. • Date: A one-night event on Saturday during the last weekend of June, as specified in the USCG District 1 Local Notice to Mariners. • Time: 8:00 pm to 10:00 pm. • Location: All waters of Gloucester Harbor, Stage Fort Park, within a 350-yard radius of the fireworks launch site on the beach located at position 42°36.3′ N, 070°40.5′ W (NAD 83).
6.3 Surfside Fireworks	• Event Type: Fireworks Display. • Sponsor: Salisbury Beach Partnership and Chamber of Commerce.

TABLE 1—Continued

	• Date: Every Saturday from June through September, as specified in the USCG District 1 Local Notice to Mariners. • Time: 9:30 pm to 10:30 pm. • Location: All waters of the Atlantic Ocean near Salisbury Beach, MA, within a 350-yard radius of the fireworks barge located at position 42°50.6′ N, 070°48.4′ W (NAD 83).
6.4 Cohasset Triathlon	• Event Type: Swim. • Sponsor: Bill Burnett. • Date: A one-day event on Sunday during the last weekend of June, as specified in the USCG District 1 Local Notice to Mariners. • Time: 08:30 am to 10:00 am. • Location: All waters in the vicinity of Cohasset Harbor around Sandy Beach, within the following points (NAD 83): 42°15.6′ N, 070°48.1′ W. 42°15.5′ N, 070°48.1′ W. 42°15.4′ N, 070°47.9′ W. 42°15.4′ N, 070°47.8′ W.
6.5 Hull Youth Football Carnival Fireworks	• Event Type: Fireworks Display. • Sponsor: Hull Youth Football. • Date: A one-night event on the third or fourth weekend of June, as specified in the USCG District 1 Local Notice to Mariners Time: 9:00 pm to 11:00 pm. • Location: All waters within 450 foot radius of the fireworks barge located approximately 500 feet of off Nantasket Beach, Hull MA located at position 42°16.6′ N, 070°51.7′ W (NAD 83).
7.0	JULY
7.1 City of Lynn 4th of July Celebration Fireworks	• Event Type: Firework Display. • Sponsor: City of Lynn. • Date: July 3rd, as specified in the USCG District 1 Local Notice to Mariners. • Time: 6:00 pm to 11:00 pm. • Location: All waters of Nahant Bay, within a 350-yard radius of the fireworks barge located at position 42°27.62′ N, 070°55.58′ W (NAD 83).
7.2 Gloucester July 4th Celebration Fireworks	• Event Type: Fireworks Display. • Sponsor: The Gloucester Fund. • Date: July 3rd, as specified in the USCG District 1 Local Notice to Mariners. • Time: 10:30 pm to 11:00 pm. • Location: All waters of Gloucester Harbor, Stage Fort Park, within a 350-yard radius of the fireworks launch site on the beach located at position 42°36.3′ N, 070°40.5′ W (NAD 83).
7.3 Manchester by the Sea Fireworks	• Event Type: Fireworks Display. • Sponsor: Manchester Parks and Recreation Department. • Date: July 4th, as specified in the USCG District 1 Local Notice to Mariners. • Time: 8:30 pm to 10:00 pm. • Location: All waters of Manchester Bay within a 350-yard radius of the fireworks launch site barge located at position 42°35.03′ N, 070°45.52′ W (NAD 83).
7.4 Weymouth 4th of July Celebration Fireworks	• Event Type: Fireworks Display. • Sponsor: Town of Weymouth 4th of July Committee. • Date: Friday or Saturday during the first weekend before July 4th, as specified in the USCG District 1 Local Notice to Mariners. • Time: 8:00 pm to 10:30 pm. • Location: All waters of Weymouth Fore River, within a 350-yard radius of the fireworks launch site located at position 42°15.5′ N, 070°56.1′ W (NAD 83).
7.5 Beverly 4th of July Celebration Fireworks	• Event Type: Fireworks Display. • Sponsor: Beverly Harbormaster. • Date: July 4th, as specified in the USCG District 1 Local Notice to Mariners. • Time: 9:00 pm to 11:00 pm. • Location: All waters of Beverly Harbor within a 350-yard radius of the fireworks launch barge located at position 42°32.62′ N, 070°52.15′ W (NAD 83)

TABLE 1—Continued

7.6 Beverly Farms 4th of July Celebration Fireworks	• Event Type: Fireworks Display. • Sponsor: Farms-Pride 4th of July Committee. • Date: July 4th, as specified in the USCG District 1 Local Notice to Mariners. • Time: 9:00 pm to 9:30 pm. • Location: All waters of Manchester Bay within a 350-yard radius of the fireworks launch site near West Beach located at position 42°33.84′ N, 070°48.5′ W (NAD 83).
7.7 Boston Pops Fireworks	• Event Type: Fireworks Display. • Sponsor: Boston 4 Celebrations. • Date: July 4th, as specified in the USCG District 1 Local Notice to Mariners. • Time: 8:30 pm to 11:00 pm. • Location: All waters of the Charles River within a 350-yard radius of the fireworks barges located in the vicinity of position 42°21.47′ N, 071°05.03′ W (NAD 83).
7.8 City of Salem Fireworks	• Event Type: Fireworks Display. • Sponsor: City of Salem. • Date: July 4th, as specified in the USCG District 1 Local Notice to Mariners. • Time: 9:00 pm to 10:00 pm. • Location: All waters of Salem Harbor, within a 350-yard radius of the fireworks launch site located on Derby Wharf at position 42°31.15′ N, 070°53.13′ W (NAD 83).
7.9 Marblehead 4th of July Fireworks	• Event Type: Fireworks Display. • Sponsor: Town of Marblehead. • Date: July 4th, as specified in the USCG District 1 Local Notice to Mariners. • Time: 8:30 pm to 9:30 pm. • Location: All waters of Marblehead Harbor within a 350-yard radius of the fireworks launch site located at position 42°30.34′ N, 070°50.13′ W (NAD 83).
7.10 Plymouth 4th of July Fireworks	• Event Type: Fireworks Display. • Sponsor: July 4 Plymouth, Inc. • Date: July 4th, as specified in the USCG District 1 Local Notice to Mariners. • Time: 9:00 pm to 10:00 pm. • Location: All waters of Plymouth Harbor within a 350-yard radius of the fireworks launch site located at position 42°57.3′ N, 070°38.3′ W (NAD 83).
7.11 Town of Nahant Fireworks	• Event Type: Fireworks Display. • Sponsor: Town of Nahant. • Date: July 4th, as specified in the USCG District 1 Local Notice to Mariners. • Time: 9:00 pm to 11:00 pm. • Location: All waters of Nahant Harbor within a 350-yard radius of the fireworks launch site on Bailey's Hill Park located at position 42°25.1′ N, 070°55.8′ W (NAD 83).
7.12 Town of Revere Fireworks	• Event Type: Fireworks Display. • Sponsor: Town of Revere. • Date: July 4th, as specified in the USCG District 1 Local Notice to Mariners. • Time: 9:00 pm to 11:00 pm. • Location: All waters of Broad Sound, within a 350-yard radius of the fireworks launch site located at Revere Beach at position 42°24.5′ N, 070°59.47′ W (NAD 83).
7.13 Yankee Homecoming Fireworks	• Event Type: Fireworks Display. • Sponsor: Yankee Homecoming. • Date: A one-day event on Saturday during the last weekend of July or first weekend of August, as specified in the USCG District 1 Local Notice to Mariners. • Time: 9:00 pm to 10:00 pm. • Location: All waters of the Merrimack River, within a 350-yard radius of the fireworks launch site located at position 42°48.97′ N, 070°52.68′ W (NAD 83).

TABLE 1—Continued

7.14 Hingham 4th of July Fireworks	• Event Type: Fireworks Display. • Sponsor: Hingham Lions Club. • Date: July 4th, as specified in the USCG District 1 Local Notice to Mariners. • Time: 8:00 pm to 10:00 pm. • Location: All waters within a 350-yard radius of the beach on Button Island located at position 42°15.07′ N, 070°53.03′ W (NAD 83).
7.15 Ipswich Independence Day Celebration Fireworks	• Event Type: Fireworks Display. • Sponsor: Trustees of the Foundation. • Date: July 4th, as specified in the USCG District 1 Local Notice to Mariners. • Time: 9:00 pm to 10:00 pm. • Location: All waters of Ipswich Bay within a 350-yard radius of the beach located at position 42°41.43′ N, 070°46.49′ W (NAD 83).
7.16 Salisbury Maritime Festival Fireworks	• Event Type: Fireworks Display. • Sponsor: Salisbury Beach Partnership, Inc. • Date: A one-day event on Saturday during the third weekend of July, as specified in the USCG District 1 Local Notice to Mariners. • Time: 10:00 pm to 10:30 pm. • Location: All waters of the Atlantic Ocean near Salisbury Beach within a 350-yard radius of the fireworks launch site located at position 42°50.6′ N, 070°48.4′ W (NAD 83).
7.17 Salisbury 4th of July Fireworks	• Event Type: Fireworks Display. • Sponsor: Salisbury Chamber of Commerce. • Date: July 4th, as specified in the USCG District 1 Local Notice to Mariners. • Time: 9:30 pm to 11:00 pm. • Location: All waters of the Atlantic Ocean near Salisbury Beach within a 350-yard radius of the fireworks launch site located at position 42°50.6′ N, 070°48.4′ W (NAD 83).
7.18 Charles River 1-Mile Swim	• Event Type: Swim. • Sponsor: Charles River Swimming Club, Inc. • Date: A one-day event held on the second Sunday in July, as specified in the USCG District 1 Local Notice to Mariners. • Time: 8:00 am to 9:00 am. Location: All waters of Charles River between the Longfellow Bridge and the Harvard Bridge within the following points (NAD 83): 42°21.7′ N, 071°04.8′ W. 42°21.7′ N, 071°04.3′ W. 42°22.2′ N, 071°07.3′ W. 42°22.1′ N, 070°07.4′ W.
7.19 Swim Across America Boston	• Event Type: Swim. • Sponsor: Swim Across America. • Date: A one-day event on Friday during the third week of July, as specified in the USCG District 1 Local Notice to Mariners. • Time: 7:00 am to 3:00 pm. • Location: All waters of Boston Harbor between Rowes Warf and Little Brewster Island within the following points (NAD 83): 42°21.4′ N, 071°03.0′ W. 42°21.5′ N, 071°02.9′ W. 42°19.8′ N, 070°53.6′ W. 42°19.6′ N, 070°53.4′ W.
7.20 Joppa Flats Open Water Mile	• Event Type: Swim. • Sponsor: Newburyport YMCA. • Date: A one-day event on Saturday during the last week of July, as specified in the USCG District 1 Local Notice to Mariners. • Time: 3:00 pm to 5:00 pm. • Location: All waters of the Merrimack River located in the Joppa Flats within the following points (NAD 83): 42°48.6′ N, 070°50.9′ W. 42°48.6′ N, 070°49.4′ W. 42°48.0′ N, 070°49.4′ W. 42°48.0′ N, 070°57.0′ W.
7.21 Swim Across America Nantasket Beach	• Event Type: Swim. • Sponsor: Swim Across America. • Date: A one-day event on Sunday during the third week of July, as specified in the USCG District 1 Local Notice to Mariners. • Time: 7:00 am to 9:30 am.

TABLE 1—Continued

	• Location: All waters of Massachusetts Bay near Nantasket Beach within the following points (NAD 83): 42°16.7′ N, 070°51.9′ W. 42°16.9′ N, 070°51.3′ W. 42°16.3′ N, 070°50.5′ W. 42°16.1′ N, 070°51.0′ W.
8.0	AUGUST
8.1 Beverly Homecoming Fireworks	• Event Type: Fireworks Display. • Sponsor: Beverly Harbormaster. • Date: A one-day event on Sunday during the first weekend of August, as specified in the USCG District 1 Local Notice to Mariners. • Time: 9:00 pm to 11:00 pm. • Location: All waters of Beverly Harbor within a 350-yard radius of the fireworks barge located at position 42°32.62′ N, 070°52.15′ W (NAD 83).
8.2 Celebrate Revere Fireworks	• Event Type: Fireworks Display. • Sponsor: Town of Revere. • Date: A one-day event on Saturday during the first weekend of August, as specified in the USCG District 1 Local Notice to Mariners. • Time: 9:00 pm to 11:00 pm. • Location: All waters within a 350-yard radius of the fireworks launch site located at Revere Beach at position 42°24.5′ N, 070°59.47′ W (NAD 83).
8.3 Gloucester Fisherman Triathlon	• Event Type: Swim. • Sponsor: Gloucester Fisherman Athletic Association. • Date: A one-day event on Sunday during the Second week of August, as specified in the USCG District 1 Local Notice to Mariners. • Time: 7:30 am to 8:30 am. • Location: All waters of Western Harbor, within the following points (NAD 83): 42°36.6′ N, 070°40.3′ W. 42°36.5′ N, 070°40.2′ W. 42°36.4′ N, 070°40.7′ W. 42°36.5′ N, 070°40.7′ W.
8.4 Urban Epic Triathlon	• Event Type: Swim. • Sponsor: Tri-Maine/Urban Epic Events. • Date: A one-day event on Sunday during the second week of August, as specified in the USCG District 1 Local Notice to Mariners. • Time: 7:00 am to 10:00 am. • Location: All waters of Dorchester Bay within the following points (NAD 83): 42°18.9′ N, 071°02.0′ W. 42°18.9′ N, 071°01.8′ W. 42°19.5′ N, 071°01.8′ W. 42°19.8′ N, 071°02.2′ W.
8.5 Celebrate the Clean Harbor Swim	• Event Type: Swim. • Sponsor: New England Marathon Swimming Association. • Date: A one-day event on Saturday during the third week of August, as specified in the USCG District 1 Local Notice to Mariners. • Time: 9:00 am to 12:00 pm. • Location: All waters of Gloucester Harbor within the following points (NAD 83): 42°35.3′ N, 070°39.8′ W. 42°35.9′ N, 070°39.2′ W. 42°35.9′ N, 070°39.8′ W. 42°35.3′ N, 070°40.2′ W.
8.6 Boston Light Swim	• Event Type: Swim. • Sponsor: Boston Light Swim. • Date: A one-day event on Sunday during the second week of August, as specified in the USCG District 1 Local Notice to Mariners. • Time: 8:00 am to 1:00 pm. • Location: All waters of Boston Harbor between the L Street Bath House and Little Brewster Island within the following points (NAD 83): 42°19.7′ N, 071°02.2′ W. 42°19.9′ N, 071°10.7′ W. 42°19.8′ N, 070°53.6′ W.

TABLE 1—Continued

	42°19.6′ N, 070°53.4′ W.
8.7 Sharkfest Swim	• Event Type: Swim. • Sponsor: Enviro-Sports Productions, Inc. • Date: A one-day event on Sunday during the last week of August, as specified in the USCG District 1 Local Notice to Mariners. • Time: 10:00 am to 12:00 pm. • Location: All waters of Old Harbor from near Columbia Point to Carson Beach within the following points (NAD 83): 42°19.1′ N, 071°02.2′ W. 42°19.2′ N, 071°01.9′ W. 42°19.7′ N, 071°02.8′ W. 42°19.4′ N, 071°02.9′ W.
8.8 The Boston Triathlon	• Event Type: Swim. • Sponsor: Wilkinson Enterprises, Inc. • Date: A one-day event on the second or third weekend of August, as specified in the USCG District 1 Local Notice to Mariners. • Time: 7:00 am to 10:00 am. • Location: All waters of Boston Inner Harbor, Piers Park East Boston to Columbus Park, Boston, Ma within the following points (NAD 83): 42°21.7′ N, 071°02.1′ W. 42°21.6′ N, 071°02.8′ W. 42°21.7′ N, 071°02.8′ W. 42°21.8′ N, 071°02.4′ W.
9.0	SEPTEMBER
9.1 Gloucester Schooner Festival Fireworks	• Event Type: Fireworks Display. • Sponsor: Stage Fort Park Gloucester. • Date: A one-day event on Saturday during the first weekend of September, as specified in the USCG District 1 Local Notice to Mariners. • Time: 7:00 pm to 11:00 pm. • Location: All waters of Gloucester Harbor within a 350-yard radius of the launch site on the beach located at position 42°36.3′ N, 070°40.5′ W (NAD 83).
9.2 Plymouth Yacht Club Celebration Fireworks	• Event Type: Fireworks Display. • Sponsor: Plymouth Yacht Club. • Date: A one-day event on Saturday during the first weekend of September, as specified in the USCG District 1 Local Notice to Mariners. • Time: 9:00 pm to 11:00 pm. • Location: All waters of Plymouth Harbor within a 350-yard radius of the fireworks barge located at position 41°22.3′ N, 070°39.4′ W (NAD 83).
9.3 Somerville Riverfest Fireworks	• Event Type: Fireworks Display. • Sponsor: Federal Realty Investment Trust. • Date: A one-day event on Saturday during the last weekend of September, as specified in the USCG District 1 Local Notice to Mariners. • Time: 7:30 pm to 10:00 pm. • Location: All waters of the Mystic River within a 350-yard radius of the fireworks barge located at position 42°23.9′ N, 071°04.8′ W (NAD 83).
9.4 Mayflower Triathlon	• Event Type: Swim. • Sponsor: Fast Forward Race Management. • Date: A one-day event on Saturday during the first weekend of September, as specified in the USCG District 1 Local Notice to Mariners. • Time: 10:00 am to 11:00 am. • Location: All waters of Plymouth Inner Harbor within the following points (NAD 83): 41°58.3′ N, 070°40.6′ W. 41°58.7′ N, 070°39.1′ W. 41°56.8′ N, 070°37.8′ W. 41°57.1′ N, 070°39.2′ W.
9.5 Plymouth Rock Triathlon	• Event Type: Swim. • Sponsor: Fast Forward Race Management. • Date: A one-day event on Sunday during the first weekend of September, as specified in the USCG District 1 Local Notice to Mariners. • Time: 7:00 am to 9:30 am. • Location: All waters of Plymouth Inner Harbor within the following points (NAD 83): 41°58.3′ N, 070°40.6′ W.

TABLE 1—Continued

	41°58.7′ N, 070°39.1′ W. 41°56.8′ N, 070°37.8′ W. 41°57.1′ N, 070°39.2′ W.
9.6 Duxbury Beach Triathlon	• Event Type: Swim. • Sponsor: Duxbury Beach Triathlon. • Date: A one-day event on Saturday during the third weekend of September, as specified in the USCG District 1 Local Notice to Mariners. • Time: 08:30 am to 09:30 am. • Location: All waters of Duxbury Bay on the south side of the Powder Point Bridge within the following points (NAD 83): 42°02.8′ N, 070°39.1′ W. 42°03.0′ N, 070°38.7′ W. 42°02.8′ N, 070°38.6′ W. 42°02.7′ N, 070°39.0′ W.
9.7 Boston Harbor Sharkfest Swim	• Event Type: Swim. • Sponsor: Enviro-Sports Productions, Inc. • Date: A one-day event on a Saturday during the second or third weekend in September, as specified in the USCG District 1 Local Notice to Mariners. • Time: 10:00 am to 1:00 pm. • Location: All waters of Boston Inner Harbor, Piers Park East Boston to Fan Pier, South Boston, Ma within the following points (NAD 83): 42°21.7′ N, 071°02.1′ W. 42°21.8′ N, 071°02.4′ W. 42°21.3′ N, 071°02.9′ W. 42°21.3′ N, 071°02.3′ W.
10.0	OCTOBER
10.1 Intercontinental Fireworks	• Event Type: Fireworks Display. • Sponsor: Intercontinental Hotel. • Date: A one-day event on Sunday during the last weekend of October, as specified in the USCG District 1 Local Notice to Mariners. • Time: 8:30 pm to 10:30 pm. • Location: All waters of Boston Inner Harbor within a 350-yard radius of the fireworks barge located at position 42°21.2′ N, 071°03′ W (NAD 83).
12.0	DECEMBER
12.1 First Night Boston Fireworks	• Event Type: Fireworks Display. • Sponsor: First Night, Inc. • Date: A one-day event on New Year's Eve, as specified in the USCG District 1 Local Notice to Mariners. • Time: 11:30 pm to 12:30 am. • Location: All waters of Boston Inner Harbor within a 350-yard radius of the fireworks barge located at position 42°21.7′ N, 071°02.6′ W (NAD 83).

Dated: May 21, 2013.

J.C. O'Connor III,

Captain, U.S. Coast Guard, Captain of the Port Boston.

[FR Doc. 2013–14124 Filed 6–13–13; 8:45 am]

BILLING CODE 9110–04–P

DEPARTMENT OF HOMELAND SECURITY

Coast Guard

33 CFR Part 165

[Docket No. USCG–2013–0322]

RIN 1625–AA00

Safety Zones; Swim Around Charleston; Charleston, SC

AGENCY: Coast Guard, DHS.

ACTION: Notice of proposed rulemaking.

SUMMARY: The Coast Guard proposes to establish temporary moving safety zones during the Swim Around Charleston, a swimming race occurring on the Wando River, the Cooper River, Charleston Harbor, and the Ashley River, in Charleston, South Carolina. The Swim Around Charleston is scheduled on Sunday, September 29, 2013. The temporary safety zones are necessary to protect swimmers, participant vessels, spectators, and the general public during the event. Persons and vessels would be prohibited from entering the safety zones unless authorized by the Captain of the Port Charleston or a designated representative.

DATES: Comments and related material must be received by the Coast Guard on or before July 15, 2013. Requests for public meetings must be received by the Coast Guard on or before June 28, 2013.

ADDRESSES: You may submit comments identified by docket number using any one of the following methods:

(1) *Federal eRulemaking Portal: http://www.regulations.gov.*

(2) *Fax:* 202–493–2251.

(3) *Mail or Delivery:* Docket Management Facility (M–30), U.S. Department of Transportation, West Building Ground Floor, Room W12–140, 1200 New Jersey Avenue SE., Washington, DC 20590–0001. Deliveries accepted between 9 a.m. and 5 p.m., Monday through Friday, except federal holidays. The telephone number is 202–366–9329.

See the ''Public Participation and Request for Comments'' portion of the **SUPPLEMENTARY INFORMATION** section below for further instructions on submitting comments. To avoid duplication, please use only one of these three methods.

FOR FURTHER INFORMATION CONTACT: If you have questions on this rule, call or email Chief Warrant Officer Christopher Ruleman, Sector Charleston Office of Waterways Management, Coast Guard; telephone (843)-740–3184, email *Christopher.L.Ruleman@uscg.mil.* If you have questions on viewing or submitting material to the docket, call Barbara Hairston, Program Manager, Docket Operations, telephone (202) 366–9826.

SUPPLEMENTARY INFORMATION:

Table of Acronyms

DHS Department of Homeland Security
FR Federal Register
NPRM Notice of Proposed Rulemaking

A. Public Participation and Request for Comments

We encourage you to participate in this rulemaking by submitting comments and related materials. All comments received will be posted without change to *http://www.regulations.gov* and will include any personal information you have provided.

1. Submitting Comments

If you submit a comment, please include the docket number for this rulemaking, indicate the specific section of this document to which each comment applies, and provide a reason for each suggestion or recommendation. You may submit your comments and material online at *http://www.regulations.gov,* or by fax, mail, or hand delivery, but please use only one of these means. If you submit a comment online, it will be considered received by the Coast Guard when you successfully transmit the comment. If you fax, hand deliver, or mail your comment, it will be considered as having been received by the Coast Guard when it is received at the Docket Management Facility. We recommend that you include your name and a mailing address, an email address, or a telephone number in the body of your document so that we can contact you if we have questions regarding your submission.

To submit your comment online, go to *http://www.regulations.gov,* type the docket number USCG–2013–0322 in the ''SEARCH'' box and click ''SEARCH.''

If you submit your comments by mail or hand delivery, submit them in an unbound format, no larger than 8½ by 11 inches, suitable for copying and electronic filing. If you submit comments by mail and would like to know that they reached the Facility, please enclose a stamped, self-addressed postcard or envelope. We will consider all comments and material received during the comment period and may change the rule based on your comments.

2. Viewing Comments and Documents

To view comments, as well as documents mentioned in this preamble as being available in the docket, go to *http://www.regulations.gov,* type the docket number USCG–2013–0322 in the ''SEARCH'' box and click ''SEARCH.'' Click on Open Docket Folder on the line associated with this rulemaking. You may also visit the Docket Management Facility in Room W12–140 on the ground floor of the Department of Transportation West Building, 1200 New Jersey Avenue SE., Washington, DC 20590, between 9 a.m. and 5 p.m., Monday through Friday, except Federal holidays.

3. Privacy Act

Anyone can search the electronic form of comments received into any of our dockets by the name of the individual submitting the comment (or signing the comment, if submitted on behalf of an association, business, labor union, etc.). You may review a Privacy Act notice regarding our public dockets in the January 17, 2008, issue of the **Federal Register** (73 FR 3316).

4. Public Meeting

We do not now plan to hold a public meeting. But you may submit a request for one, using one of the methods specified under **ADDRESSES**. Please explain why you believe a public meeting would be beneficial. If we determine that one would aid this rulemaking, we will hold one at a time and place announced by a later notice in the **Federal Register**.

B. Basis and Purpose

The legal basis for the proposed rule is the Coast Guard's authority to establish regulated navigation areas and other limited access areas: 33 U.S.C. 1231; 46 U.S.C. Chapter 701, 3306, 3703; 50 U.S.C. 191, 195; 33 CFR 1.05–1, 6.04–1, 6.04–6, 160.5; Public Law 107–295, 116 Stat. 2064; Department of Homeland Security Delegation No. 0170.1.

On Sunday, September 29, 2013, the Swim Around Charleston is scheduled to take place on the Wando River, the Cooper River, Charleston Harbor, and the Ashley River, in Charleston, South Carolina. The Swim Around Charleston will consist of a 12 mile swim that starts at Remley's Point on the Wando River, crosses the main shipping channel of Charleston Harbor, and finishes at the I–526 bridge and boat landing on the Ashley River.

The purpose of the proposed rule is to ensure the safety of the swimmers, participant vessels, spectators, and the general public during the Swim Around Charleston.

C. Discussion of Proposed Rule

The proposed rule would establish temporary moving safety zones of 50 yards in front of the lead safety vessel preceding the first race participant, 50 yards behind the safety vessel trailing the last race participants, and at all times extend 100 yards on either side of the race participants and safety vessels. The temporary safety zones would be enforced from 9 a.m. until 3:30 p.m. on September 29, 2013.

Persons and vessels would be prohibited from entering or transiting through the safety zones unless authorized by the Captain of the Port Charleston or a designated representative. Persons and vessels would be able to request authorization to enter or transit through the safety zones by contacting the Captain of the Port Charleston by telephone at (843) 740–7050, or a designated representative via VHF radio on channel 16.

D. Regulatory Analyses

We developed this proposed rule after considering numerous statutes and executive orders related to rulemaking. Below we summarize our analyses based on a number of these statutes or executive orders.

1. Regulatory Planning and Review

This proposed rule is not a significant regulatory action under section 3(f) of Executive Order 12866, Regulatory Planning and Review, as supplemented by Executive Order 13563, Improving

Regulation and Regulatory Review, and does not require an assessment of potential costs and benefits under section 6(a)(3) of Executive Order 12866 or under section 1 of Executive Order 13563. The Office of Management and Budget has not reviewed it under those Orders.

The economic impact of this proposed rule is not significant for the following reasons: (1) The safety zones would only be enforced for a total of seven hours; (2) the safety zones would move with the participant vessels so that once the swimmers clear a portion of the waterway, the safety zones would no longer be enforced in that portion of the waterway; (3) although persons and vessels would not be able to enter or transit through the safety zones without authorization from the Captain of the Port Charleston or a designated representative, they would be able to operate in the surrounding area during the enforcement period; (4) persons and vessels would still be able to enter or transit through the safety zones if authorized by the Captain of the Port Charleston or a designated representative; and (5) the Coast Guard would provide advance notification of the safety zones to the local maritime community by Local Notice to Mariners and Broadcast Notice to Mariners.

2. Impact on Small Entities

The Regulatory Flexibility Act of 1980 (RFA), 5 U.S.C. 601–612, as amended, requires federal agencies to consider the potential impact of regulations on small entities during rulemaking. The term ''small entities'' comprises small businesses, not-for-profit organizations that are independently owned and operated and are not dominant in their fields, and governmental jurisdictions with populations of less than 50,000. The Coast Guard certifies under 5 U.S.C. 605(b) that this proposed rule will not have a significant economic impact on a substantial number of small entities.

This proposed rule may affect the following entities, some of which may be small entities: the owners or operators of vessels intending to enter, transit through, anchor in, or remain within that portion of the Wando River, the Cooper River, Charleston Harbor, and the Ashley River in Charleston, South Carolina encompassed within the safety zones from 9 a.m. until 3:30 p.m. on September 29, 2013. For the reasons discussed in the Regulatory Planning and Review section above, this proposed rule would not have a significant economic impact on a substantial number of small entities. If you think that your business, organization, or governmental jurisdiction qualifies as a small entity and that this rule would have a significant economic impact on it, please submit a comment (see **ADDRESSES**) explaining why you think it qualifies and how and to what degree this rule would economically affect it.

3. Assistance for Small Entities

Under section 213(a) of the Small Business Regulatory Enforcement Fairness Act of 1996 (Pub. L. 104–121), we want to assist small entities in understanding this proposed rule. If the rule would affect your small business, organization, or governmental jurisdiction and you have questions concerning its provisions or options for compliance, please contact the person listed in the **FOR FURTHER INFORMATION CONTACT**, above. The Coast Guard will not retaliate against small entities that question or complain about this proposed rule or any policy or action of the Coast Guard.

4. Collection of Information

This proposed rule will not call for a new collection of information under the Paperwork Reduction Act of 1995 (44 U.S.C. 3501–3520).

5. Federalism

A rule has implications for federalism under Executive Order 13132, Federalism, if it has a substantial direct effect on the States, on the relationship between the national government and the States, or on the distribution of power and responsibilities among the various levels of government. We have analyzed this proposed rule under that Order and determined that this rule does not have implications for federalism.

6. Protest Activities

The Coast Guard respects the First Amendment rights of protesters. Protesters are asked to contact the person listed in the **FOR FURTHER INFORMATION CONTACT** section to coordinate protest activities so that your message can be received without jeopardizing the safety or security of people, places or vessels.

7. Unfunded Mandates Reform Act

The Unfunded Mandates Reform Act of 1995 (2 U.S.C. 1531–1538) requires Federal agencies to assess the effects of their discretionary regulatory actions. In particular, the Act addresses actions that may result in the expenditure by a State, local, or tribal government, in the aggregate, or by the private sector of $100,000,000 (adjusted for inflation) or more in any one year. Though this proposed rule would not result in such an expenditure, we do discuss the effects of this rule elsewhere in this preamble.

8. Taking of Private Property

This proposed rule would not cause a taking of private property or otherwise have taking implications under Executive Order 12630, Governmental Actions and Interference with Constitutionally Protected Property Rights.

9. Civil Justice Reform

This proposed rule meets applicable standards in sections 3(a) and 3(b)(2) of Executive Order 12988, Civil Justice Reform, to minimize litigation, eliminate ambiguity, and reduce burden.

10. Protection of Children From Environmental Health Risks

We have analyzed this proposed rule under Executive Order 13045, Protection of Children from Environmental Health Risks and Safety Risks. This rule is not an economically significant rule and would not create an environmental risk to health or risk to safety that might disproportionately affect children.

11. Indian Tribal Governments

This proposed rule does not have tribal implications under Executive Order 13175, Consultation and Coordination with Indian Tribal Governments, because it would not have a substantial direct effect on one or more Indian tribes, on the relationship between the Federal Government and Indian tribes, or on the distribution of power and responsibilities between the Federal Government and Indian tribes.

12. Energy Effects

This proposed rule is not a ''significant energy action'' under Executive Order 13211, Actions Concerning Regulations That Significantly Affect Energy Supply, Distribution, or Use.

13. Technical Standards

This proposed rule does not use technical standards. Therefore, we did not consider the use of voluntary consensus standards.

14. Environment

We have analyzed this proposed rule under Department of Homeland Security Management Directive 023–01 and Commandant Instruction M16475.lD, which guide the Coast Guard in complying with the National Environmental Policy Act of 1969 (NEPA) (42 U.S.C. 4321–4370f), and

have made a preliminary determination that this action is one of a category of actions that do not individually or cumulatively have a significant effect on the human environment. A preliminary environmental analysis checklist supporting this determination is available in the docket where indicated under **ADDRESSES**. This proposed rule involves establishing temporary moving safety zones as described in figure 2–1, paragraph (34)(g), of the Commandant Instruction. We seek any comments or information that may lead to the discovery of a significant environmental impact from this proposed rule.

List of Subjects in 33 CFR Part 165

Harbors, Marine safety, Navigation (water), Reporting and recordkeeping requirements, Security measures, Waterways.

For the reasons discussed in the preamble, the Coast Guard proposes to amend 33 CFR part 165 as follows:

PART 165—REGULATED NAVIGATION AREAS AND LIMITED ACCESS AREAS

■ 1. The authority citation for part 165 continues to read as follows:

Authority: 33 U.S.C. 1231; 46 U.S.C. Chapter 701, 3306, 3703; 50 U.S.C. 191, 195; 33 CFR 1.05–1, 6.04–1, 6.04–6, 160.5; Pub. L. 107–295, 116 Stat. 2064; Department of Homeland Security Delegation No. 0170.1.

■ 2. Add § 165.T07–0322 to read as follows:

§ 165.T07–0322 Safety Zones; Swim Around Charleston, Charleston, SC.

(a) *Regulated Areas.* The following regulated area is a moving safety zone: All waters 50 yards in front of the lead safety vessel preceding the first race participants, 50 yards behind the safety vessel trailing the last race participants, and at all times extend 100 yards on either side of the race participants and safety vessels. The Swim Around Charleston swimming race consists of a 12 mile course that starts at Remley's Point on the Wando River in approximate position 32°48′49″ N, 79°54′27″ W, crosses the main shipping channel of Charleston Harbor, and finishes at the I–526 bridge and boat landing on the Ashley River in approximate position 32°50′14″ N, 80°01′23″ W. All coordinates are North American Datum 1983.

(b) *Definition.* The term ''designated representative'' means Coast Guard Patrol Commanders, including Coast Guard coxswains, petty officers, and other officers operating Coast Guard vessels, and Federal, state, and local officers designated by or assisting the Captain of the Port Charleston in the enforcement of the regulated areas.

(c) *Regulations.*

(1) All persons and vessels are prohibited from entering or transiting through the regulated areas unless authorized by the Captain of the Port Charleston or a designated representative.

(2) Persons and vessels desiring to enter or transit through the regulated areas may contact the Captain of the Port Charleston by telephone at (843) 740–7050, or a designated representative via VHF radio on channel 16, to request authorization. If authorization to enter or transit through the regulated areas is granted by the Captain of the Port Charleston or a designated representative, all persons and vessels receiving such authorization must comply with the instructions of the Captain of the Port Charleston or a designated representative.

(3) The Coast Guard will provide notice of the regulated areas by Local Notice to Mariners, Broadcast Notice to Mariners, and on-scene designated representatives.

(d) *Effective Date.* This rule is effective from 9 a.m. until 3:30 p.m. on September 29, 2013.

Dated: May 29, 2013.

M.F. White,

Captain, U.S. Coast Guard, Captain of the Port Charleston.

[FR Doc. 2013–14125 Filed 6–13–13; 8:45 am]

BILLING CODE 9110–04–P

DEPARTMENT OF HOMELAND SECURITY

Coast Guard

33 CFR Part 165

[Docket Number USCG–2013–0285]

RIN 1625–AA00, 1625–AA87

Safety and Security Zones, San Juan Captain of the Port Zone

AGENCY: Coast Guard, DHS.

ACTION: Notice of proposed rulemaking; notice of meeting.

SUMMARY: The Coast Guard proposes to modify several aspects of the safety and security zones within the Sector San Juan Captain of the Port Zone. This action is necessary to consolidate, clarify, and otherwise modify safety and security zone regulations to eliminate unnecessary regulations and better meet the safety and security needs of the Puerto Rico and U. S. Virgin Island port communities. This action would modify existing safety zones; consolidate safety and security zones currently found in separate regulations into four regional regulations; and add and remove safety and security zones. Additionally, safety zones governing port closures in the event of a natural and other disasters have been added.

DATES: Comments and related material must be received by the Coast Guard on or before September 12, 2013.

A Public meeting will be held on August 1, 2013 at 9:00 a.m. at USCG Sector San Juan.

ADDRESSES: You may submit comments identified by docket number using any one of the following methods:

(1) *Federal eRulemaking Portal: http://www.regulations.gov.*

(2) *Fax:* 202–493–2251.

(3) *Mail or Delivery:* Docket Management Facility (M–30), U.S. Department of Transportation, West Building Ground Floor, Room W12–140, 1200 New Jersey Avenue SE., Washington, DC 20590–0001. Deliveries accepted between 9 a.m. and 5 p.m., Monday through Friday, except federal holidays. The telephone number is 202–366–9329.

See the ''Public Participation and Request for Comments'' portion of the **SUPPLEMENTARY INFORMATION** section below for further instructions on submitting comments. To avoid duplication, please use only one of these three methods.

FOR FURTHER INFORMATION CONTACT: If you have questions on this rule, call or email Lieutenant Commander Jose Perez, Sector San Juan Prevention Department, U.S. Coast Guard; telephone (787) 729–2374, email *Jose.A.Perez3@uscg.mil.* If you have questions on viewing or submitting material to the docket, call Barbara Hairston, Program Manager, Docket Operations, telephone (202) 366–9826.

The address for Sector San Juan is 5 Calle La Puntilla, San Juan, Puerto Rico, 00901.

The address of MSD St. Thomas is 1 King Wharf Waterfront, St. Thomas, VI 00804.

SUPPLEMENTARY INFORMATION:

Table of Acronyms

DHS Department of Homeland Security
FR Federal Register
NPRM Notice of Proposed Rulemaking
MSD Marine Safety Detachment

A. Public Participation and Request for Comments

We encourage you to participate in this rulemaking by submitting comments and related materials. All comments received will be posted without change to *http://*

www.regulations.gov and will include any personal information you have provided.

1. Submitting Comments

If you submit a comment, please include the docket number for this rulemaking, indicate the specific section of this document to which each comment applies, and provide a reason for each suggestion or recommendation. You may submit your comments and material online at *http://www.regulations.gov,* or by fax, mail, or hand delivery, but please use only one of these means. If you submit a comment online, it will be considered received by the Coast Guard when you successfully transmit the comment. If you fax, hand deliver, or mail your comment, it will be considered as having been received by the Coast Guard when it is received at the Docket Management Facility. We recommend that you include your name and a mailing address, an email address, or a telephone number in the body of your document so that we can contact you if we have questions regarding your submission.

To submit your comment online, go to *http://www.regulations.gov,* type the docket number USCG–2013–0285 in the ''SEARCH'' box and click ''SEARCH.'' Click on ''Submit a Comment'' on the line associated with this rulemaking.

If you submit your comments by mail or hand delivery, submit them in an unbound format, no larger than 8½ by 11 inches, suitable for copying and electronic filing. If you submit comments by mail and would like to know that they reached the Facility, please enclose a stamped, self-addressed postcard or envelope. We will consider all comments and material received during the comment period and may change the rule based on your comments.

2. Viewing Comments and Documents

To view comments, as well as documents mentioned in this preamble as being available in the docket, go to *http://www.regulations.gov,* type the docket number USCG–2013–0285 in the ''SEARCH'' box and click ''SEARCH.'' Click on Open Docket Folder on the line associated with this rulemaking. You may also visit the Docket Management Facility in Room W12–140 on the ground floor of the Department of Transportation West Building, 1200 New Jersey Avenue SE., Washington, DC 20590, between 9 a.m. and 5 p.m., Monday through Friday, except federal holidays.

3. Privacy Act

Anyone can search the electronic form of comments received into any of our dockets by the name of the individual submitting the comment (or signing the comment, if submitted on behalf of an association, business, labor union, etc.). You may review a Privacy Act notice regarding our public dockets in the January 17, 2008, issue of the **Federal Register** (73 FR 3316).

4. Public Meeting

We plan to hold a public meeting on August 1, 2013 at 9:00 a.m. at USCG Sector San Juan and on August 8, 2013 at 9:00 a.m. at MSD St. Thomas. We plan to post the minutes of this meeting in the docket. For information on facilities or services for individuals with disabilities or to request special assistance at the public meeting, contact the person named in the **FOR FURTHER INFORMATION CONTACT** section, above.

B. Regulatory History and Information

Between 1998 and 2009 the USCG has published 11 regulations regarding safety and security zones within the Sector San Juan Area of Responsibility (AOR). These 11 regulations are currently: 33 CFR 165.754 Safety Zone: San Juan Harbor, San Juan, PR; 33 CFR 165.755 Safety Zone; Guayanilla, Puerto Rico; 33 CFR 165.757 Safety Zones; Ports of Ponce, Tallaboa, and Guayanilla, Puerto Rico and Limetree Bay, St. Croix, U.S.V.I.; 33 CFR 165.758 Security Zone; San Juan, Puerto Rico; 33 CFR 165.762 Security Zone; St. Thomas, U.S. Virgin Islands; 33 CFR 165.763 Moving and Fixed Security Zone, Port of Fredericksted, Saint Croix, U.S. Virgin Islands; 33 CFR 165.766 Security Zone: HOVENSA Refinery, St. Croix, U.S. Virgin Islands; 33 CFR 165.770 Security Zone: HOVENSA Refinery, St. Croix, U.S. Virgin Islands; 33 CFR 165.771 Safety Zone; Bahia de Ponce, Puerto Rico; 33 CFR 165.776 Security Zone; Coast Guard Base San Juan, San Juan Harbor, Puerto Rico; and 33 CFR 165.778 Security Zone; Port of Mayaguez, Puerto Rico. The regulations as they are currently drafted are repetitive, disorganized, and some are unnecessary. This regulation change will reorganize the current regulations into regional regulations, remove unneeded regulations (e.g. a permanent security zone around an oil terminal), add safety zone regulations regarding port closures in times of natural and other disasters, and safety zones for fireworks displays.

C. Basis and Purpose

The legal basis for the rule is the Coast Guard's authority to establish regulated navigation areas and limited access areas: 33 U.S.C. 1226, 1231; 46 U.S.C. Chapter 701, 3306, 3703; 50 U.S.C. 191, 195; 33 CFR 1.05–1, 6.04–1, 6.04–6, 160.5; Pub. L. 107–295, 116 Stat. 2064; Department of Homeland Security Delegation No. 0170.1.

The purpose of the regulation is to reorganize the regulations into four regional areas, harmonize the regulations within the Sector San Juan AOR, remove unnecessary regulations, and add regulations regarding port closures in the event of natural and other disasters and safety zones for firework barges.

D. Discussion of Proposed Rule

The main change of the regulations is the consolidation of 11 existing regulations into four regional regulations and a natural and other disasters safety zone. The consolidated regulation would be published as 33 CFR 165.754 for the North Coast of Puerto Rico; 33 CFR 165.755 for the South Coast of Puerto Rico; 33 CFR 165.757 for St. Thomas; 33 CFR 165.758 for St. Croix; and 33 CFR 165.762 Natural and Other Disasters Safety Zone for Sector San Juan COTP Zone.

Safety and Security Zones; North Coast of Puerto Rico (33 CFR 165.754) would combine the regulations set forth in the current 33 CFR 165.754, 33 CFR 165.758, and 33 CFR 165.776. This new regulation would not alter the security zone for the Coast Guard Base and cruise ships. However, the moving safety zone for Liquefied Hazardous Gas (LHG) would be altered from the existing distance of .5 NM to 100 yards to align with the rest of the LHG safety zones in the AOR, and also it will add a fixed 50 yard safety zone around the vessel at all times while the vessel is moored. Additionally, a safety zone for certain vessels and firework barges would be added, establishing at all times a safety zone around vessels that pose a higher risk of injury to people or property without publishing Temporary Final Rules for each individual event, which often are done with minimal notice to the public.

Safety and Security Zones; South Coast of Puerto Rico (33 CFR 165.755) would combine the regulations set forth in the current 33 CFR 165.755, 33 CFR 165.778, and the parts of 33 CFR 165.757 that regulate Guayanilla, Tallaboa, and Ponce. This new regulation would not alter the security zone for cruise ships. The safety zone for LHG while the vessel is transiting will remain unaltered, however a fixed 50-yard security zone would be added around the vessel at all times while the vessel is moored. Additionally, a safety

zone for certain vessels and firework barges would be added, establishing at all times a safety zone around these vessels that pose a higher risk of injury to people or property without necessitating publication of a Temporary Final Rules for each individual event, which often are done with minimal notice to the public.

Safety and Security Zones; St. Croix, USVI (33 CFR 165.757) would combine the regulations set forth in the current 33 CFR 165.763 and the parts of 33 CFR 165.757 that regulate Limetree Bay. This new regulation would not alter the security zone for cruise ships. The safety zone for LHG while the vessel is moving will remain unaltered, however a fixed 50 yard security zone would be added around the vessel at all times while the vessel is moored. Additionally, a safety zone for certain vessels and firework barges would be added, establishing at all times a safety zone around these vessels that pose a higher risk of injury to people or property without necessitating publication of a Temporary Final Rule for each individual event, which are often done with minimal notice to the public.

Safety and Security Zones; St. Thomas, USVI (33 CFR 165.758) would include the regulations set forth in the current 33 CFR 165.762. This new regulation would not alter the security zone for cruise ships. However, a safety zone for certain vessels and firework barges would be added, establishing at all times a safety zone around these vessels that pose a higher risk of injury to people or property without necessitating publication of Temporary Final Rules for each individual event, which are often done with minimal notice to the public. Three safety zones for reoccurring firework displays will be added to this regulation.

Safety Zone; Sector San Juan COTP Zone Natural and Other Disasters Port Closure (33 CFR 165.762) would be added to provide the legal jurisdiction to close a ports affected by natural and other disasters. In the past, temporary regulations regarding port closures have been published after natural and other disasters; however, publishing this notice in a permanent regulation provides better advance notice to the public regarding when port closures should be expected to occur, and would only require publication of a Notice of Enforcement during the storm itself, increasing efficiency and reducing the workload to the Coast Guard. There will be no change in the manner in which the public is notified by the Coast Guard of a port closure.

Disestablishment of the following regulations: the current 33 CFR 165.766 and 33 CFR 165.770. Both of these regulations are for the permanent security zone around HOVENSA refinery; however, this facility is no longer operating as a refinery and is now only an oil terminal. Even if the refinery were to become operational again, disestablishment of the security zone would not stop the refinery from becoming operational again. Similarly, the disestablishment of the current 33 CFR 165.771, the regulation for a safety zone around an LNG vessel transiting into Ponce, PR is unnecessary. This regulation is not needed as only two LNG vessels have entered Ponce, PR in recent history. Also, the proposed regulations concerning ''certain vessels'' will allow for the establishment of a safety zone if LNG vessels frequent Ponce, PR in the future.

E. Regulatory Analyses

We developed this proposed rule after considering numerous statutes and executive orders related to rulemaking. Below we summarize our analyses based on a number of these statutes or executive orders.

1. Regulatory Planning and Review

This proposed rule is not a significant regulatory action under section 3(f) of Executive Order 12866, Regulatory Planning and Review, as supplemented by Executive Order 13563, Improving Regulation and Regulatory Review, and does not require an assessment of potential costs and benefits under section 6(a)(3) of Executive Order 12866 or under section 1 of Executive Order 13563. The Office of Management and Budget has not reviewed it under those Orders. This regulation is not significant regulatory action because most of the proposed regulations already exist in some form; such as natural and other disasters safety zones as a temporary final rule for each individual natural or other disasters, security zones around cruise ships, safety zones around LHG vessels, and firework safety zones. The regulations that are being added are not expected to have a significant regulatory action due to the infrequency of use for the new moving safety zones around certain vessels. The addition of the safety zone regarding moored LHG vessels should not have a significant effect because it is not anticipated to impede any other commercial traffic. The removal of the LHG safety zone for Ponce would have no effect as it has not been used since it was published.

2. Impact on Small Entities

Under the Regulatory Flexibility Act (5 U.S.C. 601–612), we have considered the impact of this proposed rule on small entities. The Coast Guard certifies under 5 U.S.C. 605(b) that this proposed rule will not have a significant economic impact on a substantial number of small entities.

These safety and security zones would not have a significant economic impact on a substantial number of small entities for the reasons discussed in the Regulatory Evaluation section above.

If you think that your business, organization, or governmental jurisdiction qualifies as a small entity and that this rule would have a significant economic impact on it, please submit a comment (see **ADDRESSES**) explaining why you think it qualifies and how and to what degree this rule would economically affect it.

3. Assistance for Small Entities

Under section 213(a) of the Small Business Regulatory Enforcement Fairness Act of 1996 (Pub. L. 104–121), we want to assist small entities in understanding this proposed rule. If the rule would affect your small business, organization, or governmental jurisdiction and you have questions concerning its provisions or options for compliance, please contact the person listed in the **FOR FURTHER INFORMATION CONTACT**, above. The Coast Guard will not retaliate against small entities that question or complain about this proposed rule or any policy or action of the Coast Guard.

4. Collection of Information

This proposed rule will not call for a new collection of information under the Paperwork Reduction Act of 1995 (44 U.S.C. 3501–3520.).

5. Federalism

A rule has implications for federalism under Executive Order 13132, Federalism, if it has a substantial direct effect on the States, on the relationship between the national government and the States, or on the distribution of power and responsibilities among the various levels of government. We have analyzed this proposed rule under that Order and determined that this rule does not have implications for Federalism.

6. Protest Activities

The Coast Guard respects the First Amendment rights of protesters. Protesters are asked to contact the person listed in the **FOR FURTHER INFORMATION CONTACT** section to coordinate protest activities so that your

message can be received without jeopardizing the safety or security of people, places or vessels.

7. Unfunded Mandates Reform Act

The Unfunded Mandates Reform Act of 1995 (2 U.S.C. 1531–1538) requires federal agencies to assess the effects of their discretionary regulatory actions. In particular, the Act addresses actions that may result in the expenditure by a state, local, or tribal government, in the aggregate, or by the private sector of $100,000,000 (adjusted for inflation) or more in any one year. Though this proposed rule would not result in such expenditure, we do discuss the effects of this rule elsewhere in this preamble.

8. Taking of Private Property

This proposed rule would not cause a taking of private property or otherwise have taking implications under Executive Order 12630, Governmental Actions and Interference with Constitutionally Protected Property Rights.

9. Civil Justice Reform

This proposed rule meets applicable standards in sections 3(a) and 3(b)(2) of Executive Order 12988, Civil Justice Reform, to minimize litigation, eliminate ambiguity, and reduce burden.

10. Protection of Children From Environmental Health Risks

We have analyzed this proposed rule under Executive Order 13045, Protection of Children from Environmental Health Risks and Safety Risks. This rule is not an economically significant rule and would not create an environmental risk to health or risk to safety that might disproportionately affect children.

11. Indian Tribal Governments

This proposed rule does not have tribal implications under Executive Order 13175, Consultation and Coordination with Indian Tribal Governments, because it would not have a substantial direct effect on one or more Indian tribes, on the relationship between the Federal Government and Indian tribes, or on the distribution of power and responsibilities between the Federal Government and Indian tribes.

12. Energy Effects

This proposed rule is not a ''significant energy action'' under Executive Order 13211, Actions Concerning Regulations That Significantly Affect Energy Supply, Distribution, or Use.

13. Technical Standards

This proposed rule does not use technical standards. Therefore, we did not consider the use of voluntary consensus standards.

14. Environment

We have analyzed this proposed rule under Department of Homeland Security Management Directive 023–01 and Commandant Instruction M16475.lD, which guide the Coast Guard in complying with the National Environmental Policy Act of 1969 (NEPA) (42 U.S.C. 4321–4370f), and have determined that this action is one of a category of actions that do not individually or cumulatively have a significant effect on the human environment. This proposed rule involves amending, reorganization, and republication of existing safety and security zones around specific vessels of less than a week in duration and the addition of port closures that would be otherwise published as TFR. This rule will be categorically excluded from further review under paragraph 34(g) of Figure 2–1 of the Commandant Instruction. An environmental analysis checklist supporting this determination and a Categorical Exclusion Determination will be available in the docket where indicated under **ADDRESSES**. We seek any comments or information that may lead to the discovery of a significant environmental impact from this rule.

List of Subjects in 33 CFR Part 165

Harbors, Marine safety, Navigation (water), Reporting and recordkeeping requirements, Security measures, Waterways.

For the reasons discussed in the preamble, the Coast Guard proposes to amend 33 CFR part 165 as follows:

PART 165—REGULATED NAVIGATION AREAS AND LIMITED ACCESS AREAS

■ 1. The authority citation for part 165 continues to read as follows:

Authority: 33 U.S.C. 1226, 1231; 46 U.S.C. Chapter 701, 3306, 3703; 50 U.S.C. 191, 195; 33 CFR 1.05–1, 6.04–1, 6.04–6, 160.5; Pub. L. 107–295, 116 Stat. 2064; Department of Homeland Security Delegation No. 0170.1.

■ 2. Revise § 165.754 to read as follows:

§ 165.754 Safety and Security Zones; North Coast of Puerto Rico

(a) *Location.* All coordinates referenced use datum: NAD 83. The following areas are established as a safety zones during the specified conditions:

(1) *Safety Zone around Liquefied Hazardous Gas (LHG) vessels.*

(i) All waters of the Atlantic Ocean within a 100 yard radius surrounding all LHG vessels with product aboard while transiting south of Latitude 18°29.5′ N on approach to or departing from Port of San Juan, Puerto Rico. The safety zone remains in effect until the LHG vessel is moored or anchored.

(ii) All waters of San Juan Harbor within a 50-yard radius surrounding all LHG vessels while the vessel is moored or anchored with product aboard or is transferring LHG within the waters of Port of San Juan, Puerto Rico.

(2) *Security Zone around Cruise Ships.*

(i) All waters of the Atlantic Ocean within a 50-yard radius surrounding all cruise ships while transiting south of Latitude 18°29.5′ N on approach to or departing from Port of San Juan, Puerto Rico. The safety zone remains in effect until the cruise ship is moored or anchored.

(ii) All waters of San Juan Harbor within a 50-yard radius surrounding all cruise ships while the vessel is moored or anchored within the Port of San Juan, Puerto Rico.

(3) *Safety Zone around Certain vessels.*

(i) All waters of the Atlantic Ocean within a 100-yard radius surrounding certain vessel while transiting within 1 NM from the port entrance on approach to or departing from the Ports of Fajardo, San Juan, or Arecibo, Puerto Rico. The safety zone remains in effect until the vessel is moored or anchored.

(ii) All waters within a 100 yard radius surrounding certain vessel while the vessel is moored or anchored within the waters of Ports of Fajardo, San Juan, or Arecibo, Puerto Rico.

(4) *Security Zone around Coast Guard Base San Juan.* All waters of San Juan Harbor encompassed by an imaginary line connecting the following points: starting at Point 1 in position 18°27.65′ N, 066°06.93′ W; thence east to Point 2 in position 18°27.65′ N, 066°06.87′ W; thence south to Point 3 in position 18°27.58′ N, 066°06.93′ W; thence southwest to Point 4 in position 18°27.5′ N, 066°06.98′ W; thence northeast to Point 5 in position 18°27.42′ N, 066°07.12′ W; thence north to Point 6 in position 18°27.77′ N, 066°07.17′ W; thence northwest to Point 7 in position 18°27.77′ N, 066°07.12′ W; and thence following the coastline back to the origin.

(5) *Safety Zone around Firework Displays.* All waters within the San Juan COTP Zone within a 1,000 foot radius of a firework barge. The Coast Guard realizes that some large scale events, such as those with many participants or spectators, or those that could severely

restrict navigation or pose a significant hazard, may still require separate special local regulations or safety zones that address the specific peculiarities of the event. In those situations, the Coast Guard will create special local regulations or safety zones specifically for the event, and those regulations will supersede the proposed regulations in this rule.

(b) *Regulations.* (1) Under general regulations in § 165.33 of this part, entering, anchoring, mooring or transiting in these zones is prohibited unless authorized by the Coast Guard Captain of the Port of San Juan.

(2) Persons desiring to transit the area of the security zone may contact the Captain of the Port at the Sector San Juan at (787) 289–2041 or via VHF radio on Channel 16 to seek permission to transit the area. If permission is granted, all persons and vessels must comply with the instructions of the Captain of the Port or his designated representative.

(3) Coast Guard Sector San Juan will attempt to notify the maritime community of periods during which these safety and security zones will be in effect by providing advance notice of scheduled arrivals and departures of vessels via a broadcast notice to mariners.

(c) *Definitions.*

(1) *Cruise ship.* For the purposes of this section, Cruise ship means a passenger vessel greater than 100 feet in length that is authorized to carry more than 150 passengers for hire, except for a ferry.

(2) *Certain vessel.* For the purposes of this section, ''certain vessel'' means any vessel within 3 nautical miles of U.S. Territorial Waters and bound for a port listed in paragraph (a)(3) that is deemed to be in need of a moving safety zone by the Captain of the Port, San Juan for safety reasons. In making this determination, the Captain of the Port considers all relevant safety factors, including but not limited to the presence of unusually harmful or hazardous substances and the risk to population or infrastructure.

(3) *Designated representative.* For the purposes of this section, designated representative means Coast Guard Patrol Commanders including Coast Guard coxswains, petty officers and other officers operating Coast Guard vessels and federal, state, and local officers designated by or assisting the Captain of the Port San Juan in the enforcement of the security zone.

(4) *Vessel.* For the purposes of this section, vessel means every description of watercraft or other artificial contrivance used, or capable of being used, as a means of transportation on water, except U.S. Coast Guard or U.S. Naval vessels and servicing pilot and tug boats.

(5) *LHG.* For the purposes of this section, LHG means all cargos regulated under 33 CFR part 127 to include LNG.

■ 3. Revise § 165.755 to read as follows:

§ 165.755 Safety and Security Zones; South Coast of Puerto Rico

(a) *Location.* All coordinates referenced use datum: NAD 83. The following areas are established as a safety zones during the specified conditions:

(1) *Safety Zone around Liquefied Hazardous Gas (LHG) Vessels.*

(i) *Port of Tallaboa, Puerto Rico.* (A) All waters of the Caribbean Sea within a 100 yard radius surrounding all LHG vessels with product aboard while transiting north of Latitude 17°56.0′ N on approach to or departing from the Port of Tallaboa, Puerto Rico. The safety zone remains in effect until the LHG vessel is moored.

(B) All waters of Bahia de Tallaboa within a 50-yard radius surrounding all LHG vessels while the vessel is moored or anchored with product aboard or is transferring LHG within the Port of Tallaboa, Puerto Rico.

(ii) *Port of Guayanilla, Puerto Rico.* (A) All waters of the Caribbean Sea within a 100-yard radius surrounding all LHG vessels around with product aboard while transiting north of Latitude 17°57.0′ N in the waters of the Caribbean Sea on approach to or departing from the Port of Guayanilla, Puerto Rico. The safety zone remains in effect until the LHG vessel is moored.

(B) All waters of Bahia de Guayanilla within a 50-yard radius surrounding all LHG vessels while the vessel is moored or anchored with product aboard or is transferring LHG within the Port of Guayanilla, Puerto Rico.

(2) *Security Zone around Cruise Ships.*

(i) All waters of the Caribbean Sea within a 50 yard radius surrounding all cruise ships while transiting east of Longitude 067°11.5′ W on approach to or departing from Port of Mayaguez, Puerto Rico. The safety zone remains in effect until the cruise ship is moored or anchored.

(ii) All waters of Bahia de Mayaguez within a 50 yard radius surrounding all cruise ships while the vessel is moored or anchored within the Port of Mayaguez, Puerto Rico.

(3) *Safety Zone around Certain Vessels.*

(i) All waters of the Caribbean Sea within a 100 yard radius surrounding certain vessel while transiting within 1 NM from the port entrance on approach to or departing from the Ports of Yabucoa, Guayanilla, Guayama, Ponce, Tallaboa, Mayaguez, Salinas and Guanica, Puerto Rico. The safety zone remains in effect until the vessel is moored or anchored.

(ii) All waters within a 100 yard radius surrounding certain vessel while the vessel is moored or anchored within the waters of Ports of Yabucoa, Guayanilla, Guayama, Ponce, Tallaboa, Mayaguez, Salinas and Guanica, Puerto Rico.

(4) *Safety Zone zone around Firework Displays.* All waters with the San Juan COTP Zone within a 1000 foot radius of a firework barge. The Coast Guard realizes that some large scale events, such as those with many participants or spectators, or those that could severely restrict navigation or pose a significant hazard, may still require separate special local regulations or safety zones that address the specific peculiarities of the event. In those situations, the Coast Guard will create special local regulations or safety zones specifically for the event, and those regulations will supersede the proposed regulations in this rule.

(b) *Regulations.* (1) Under general regulations in § 165.33 of this part, entering, anchoring, mooring or transiting in these zones is prohibited unless authorized by the Coast Guard Captain of the Port of San Juan.

(2) Persons desiring to transit the area of the security zone may contact the Captain of the Port at the Sector San Juan at (787) 289–2041 or via VHF radio on Channel 16 to seek permission to transit the area. If permission is granted, all persons and vessels must comply with the instructions of the Captain of the Port or his designated representative.

(3) Coast Guard Sector San Juan will attempt to notify the maritime community of periods during which these safety and security zones will be in effect by providing advance notice of scheduled arrivals and departures of vessels via a broadcast notice to mariners.

(c) *Definitions.*

(1) *Cruise ship.* For the purposes of this section, Cruise ship means a passenger vessel greater than 100 feet in length that is authorized to carry more than 150 passengers for hire, except for a ferry.

(2) *Certain vessel.* For the purposes of this section, certain vessel means any vessel within the 3 nautical miles of U.S. Territorial Waters and bound for the listed ports in (a)(3) that is deemed to be in need of a moving safety zone by the Captain of the Port, San Juan for

safety reasons. In making this determination, the Captain of the Port considers all relevant safety factors, including but not limited to the presence of unusually harmful or hazardous substances and the risk to population or infrastructure.

(3) *Designated representative.* For the purposes of this section, designated representative means Coast Guard Patrol Commanders including Coast Guard coxswains, petty officers and other officers operating Coast Guard vessels and federal, state, and local officers designated by or assisting the Captain of the Port San Juan in the enforcement of the security zone.

(4) *Vessel.* For the purposes of this section, vessel means every description of watercraft or other artificial contrivance used, or capable of being used, as a means of transportation on water, except U.S. Coast Guard or U.S. Naval vessels and servicing pilot and tug boats.

(5) *LHG.* For the purposes of this section, LHG means all cargos regulated under 33 CFR part 127 to include LNG.

(d) *Authority.* In addition to 33 U.S.C 1231 and 50 U.S.C. 191, the authority for this section includes 33 U.S.C. 1226.

■ 4. Revise § 165.757 to read as follows:

§ 165.757 Safety and Security Zones; St. Croix, USVI.

(a) *Location.* All coordinates referenced use datum: NAD 83. The following areas are established as a safety zones during the specified conditions:

(1) *Safety Zone around Liquefied Hazardous Gas (LHG) Vessels.*

(i) All waters of the Caribbean Sea within a 100 yard radius surrounding all LHG vessels with product aboard while transiting north of Latitude 17°39.0′ N on approach to or departing from the Port of Limetree Bay, Saint Croix, U.S. Virgin Islands.

(ii) All waters of Limetree Bay within a 50-yard radius surrounding all LHG vessels while the vessel is docked with product aboard or is transferring LHG within the waters of the Port of Limetree Bay, Saint Croix, U.S. Virgin Islands.

(2) *Security Zone around Cruise Ships.*

(i) All waters of the Caribbean Sea within a 50 yard radius surrounding all cruise ships while transiting east of Longitude 064°54.5′ W on approach to or departing from Port of Fredericksted, Saint Croix, U.S. Virgin Islands. The safety zone remains in effect until the cruise ship is moored or anchored.

(ii) All waters of the Caribbean Sea within a 50 yard radius surrounding all cruise ships while the vessel is moored or anchored within the Port of Fredericksted, Saint Croix, U.S. Virgin Islands.

(3) *Safety Zone around Certain Vessels.*

(i) All waters of the Caribbean Sea within a 100 yard radius surrounding certain vessels while transiting within 1 NM from the port entrance on approach to or departing from the Ports of Frederiksted, Limetree Bay, Krause Lagoon, and Christiansted, Saint Croix, U.S. Virgin Islands. The safety zone remains in effect until the vessel is moored or anchored.

(ii) All waters within a 100 yard radius surrounding certain vessels while the vessel is moored or anchored within the waters of Ports of Frederiksted, Limetree Bay, Krause Lagoon, and Christiansted, Saint Croix, U.S. Virgin Islands.

(4) *Safety Zone around Firework Displays.* All waters within the San Juan COTP Zone within a 1000 foot radius of a firework barge. The Coast Guard realizes that some large scale events, such as those with many participants or spectators, or those that could severely restrict navigation or pose a significant hazard, may still require separate special local regulations or safety zones that address the specific peculiarities of the event. In those situations, the Coast Guard will create special local regulations or safety zones specifically for the event, and those regulations will supersede the proposed regulations in this rule.

(b) *Regulations.* (1) Under general regulations in § 165.33 of this part, entering, anchoring, mooring or transiting in these zones is prohibited unless authorized by the Coast Guard Captain of the Port of San Juan.

(2) Persons desiring to transit the area of the security zone may contact the Captain of the Port at the Sector San Juan at (787) 289–2041 or via VHF radio on Channel 16 to seek permission to transit the area. If permission is granted, all persons and vessels must comply with the instructions of the Captain of the Port or his designated representative.

(3) Coast Guard Sector San Juan will attempt to notify the maritime community of periods during which these safety and security zones will be in effect by providing advance notice of scheduled arrivals and departures of vessels via a broadcast notice to mariners.

(c) *Definition.*

(1) *Cruise ship.* For the purposes of this section, Cruise ship means a passenger vessel greater than 100 feet in length that is authorized to carry more than 150 passengers for hire, except for a ferry.

(2) *Certain vessel.* For the purposes of this section, certain vessel means any vessel within the 3 nautical mile U.S. Territorial Waters and bound for the listed ports in (a)(3) that is deemed to be in need of a moving safety zone by the Captain of the Port, San Juan for safety reasons. In making this determination, the Captain of the Port considers all relevant safety factors, including but not limited to the presence of unusually harmful or hazardous substances and the risk to population or infrastructure.

(3) *Designated representative.* For the purposes of this section, designated representative means Coast Guard Patrol Commanders including Coast Guard coxswains, petty officers and other officers operating Coast Guard vessels and federal, state, and local officers designated by or assisting the Captain of the Port San Juan in the enforcement of the security zone.

(4) *Vessel.* For the purposes of this section, vessel means every description of watercraft or other artificial contrivance used, or capable of being used, as a means of transportation on water, except U.S. Coast Guard or U.S. Naval vessels and servicing pilot and tug boats.

(5) *LHG.* For the purposes of this section, LHG means all cargos regulated under 33 CFR part 127 to include LNG.

5. Revise § 165.758 to read as follows:

§ 165.758 Safety and Security Zones; St. Thomas, USVI.

(a) *Location.* All coordinates referenced use datum: NAD 83. The following areas are established as a safety zones during the specified conditions:

(1) *Security Zone around Cruise Ships.*

(i) All waters of the Caribbean Sea within a 50 yard radius surrounding all cruise ships while transiting north of Latitude 18°18.0′ N on approach to or departing from Port of St. Thomas, Saint Thomas, U.S. Virgin Islands. The safety zone remains in effect until the cruise ship is moored or anchored.

(ii) All waters of St. Thomas Harbor within a 50 yard radius surrounding all cruise ships while the vessel is moored or anchored within the Port of St. Thomas, Saint Thomas, U.S. Virgin Islands.

(2) *Safety Zone around Certain Vessels.*

(i) All waters of the Caribbean Sea within a 100 yard radius surrounding certain vessel while transiting within 1 NM from the port entrance on approach to or departing from the Ports of Charlotte Amalie, Red Hook and Cruz Bay, Saint Thomas, U.S. Virgin Islands.

The safety zone remains in effect until the vessel is moored or anchored.

(ii) All waters within a 100 yard radius surrounding certain vessel while the vessel is moored or anchored within the waters of Ports of Charlotte Amalie, Red Hook and Cruz Bay, Saint Thomas, U.S. Virgin Islands.

(3) *Safety Zone around Firework Displays.*

(i) *St. John: 4th of July Firework Display.* All waters of the Cruz Bay within a 200 yards radius centered on the position 18°19.92′ N, 064°48.1′ W on the 4th of July.

(ii) *St. Thomas: V. I. Carnival Finale.* All waters of St. Thomas Harbor within an 800 foot radius centered on the position 18°20.200′ N, 64°55.200′ W during the week of Carnival.

(iii) *St. Thomas: Yatch Haven New Years Eve Celebrations.* All waters of St. Thomas Harbor within an 800 foot radius centered on the position 18°20.160′ N, 64°55.492′ W on New Year's Eve.

(iv) All waters within the San Juan COTP Zone within a 1000 foot radius of a firework barge not otherwise specified in this paragraph. The Coast Guard realizes that some large scale events, such as those with many participants or spectators, or those that could severely restrict navigation or pose a significant hazard, may still require separate special local regulations or safety zones that address the specific peculiarities of the event. In those situations, the Coast Guard will create special local regulations or safety zones specifically for the event, and those regulations will supersede the proposed regulations in this rule.

(b) *Regulations.*

(1) Under general regulations in § 165.33 of this part, entering, anchoring, mooring or transiting in these zones is prohibited unless authorized by the Coast Guard Captain of the Port of San Juan.

(2) Persons desiring to transit the area of the security zone may contact the Captain of the Port at the Sector San Juan at (787) 289–2041 or via VHF radio on Channel 16 to seek permission to transit the area. If permission is granted, all persons and vessels must comply with the instructions of the Captain of the Port or his designated representative.

(3) Coast Guard Sector San Juan will attempt to notify the maritime community of periods during which these safety and security zones will be in effect by providing advance notice of scheduled arrivals and departures of vessels via a broadcast notice to mariners.

(c) *Definition.*

(1) *Cruise ship.* For the purposes of this section, Cruise ship means a passenger vessel greater than 100 feet in length that is authorized to carry more than 150 passengers for hire, except for a ferry.

(2) *Certain vessel.* For the purposes of this section, certain vessel means any vessel within the 3 nautical mile U.S. Territorial Waters and bound for the listed ports in (a)(2) that is deemed to be in need of a moving safety zone by the Captain of the Port San Juan for safety reasons. In making this determination, the Captain of the Port considers all relevant safety factors, including but not limited to the presence of unusually harmful or hazardous substances and the risk to population or infrastructure.

(3) *Designated representative.* For the purposes of this section, designated representative means Coast Guard Patrol Commanders including Coast Guard coxswains, petty officers and other officers operating Coast Guard vessels and federal, state, and local officers designated by or assisting the Captain of the Port San Juan in the enforcement of the security zone.

(4) *Vessel.* For the purposes of this section, vessel means every description of watercraft or other artificial contrivance used, or capable of being used, as a means of transportation on water, except U.S. Coast Guard or U.S. Naval vessels and servicing pilot and tug boats.

(5) *LHG.* For the purposes of this section, LHG means all cargos regulated under 33 CFR part 127 to include LNG.

■ 6. Revise § 165.762 to read as follows:

§ 165.762 Safety Zone; Sector San Juan COTP Zone Natural and Other Disasters Port Closure

(a) *Regulated Areas.* The following regulated areas are safety zones:

(1) *St. Thomas and St. John, USVI.* All waters of the Atlantic Ocean and Caribbean Sea surrounding St. Thomas, USVI and St. John, USVI encompassed within an imaginary line connecting the following points: starting at point 1 in position 18°24.380′ N, 65°04.960′ W; thence east to point 2 in position 18°25.162′ N, 64°53.774′ W; thence southeast to point 3 in position 18°22.386′ N, 64°51.302′ W; thence east to point 4 in position 18°22.601′ N, 64°45.061′ W; thence east to point 5 in position 18°21.311′ N, 64°38.799′ W; thence south to point 6 in position 18°18.045′ N, 64°39.087′ W; thence west to point 7 in position 18°17.184′ N, 64°47.265′ W; thence southwest to point 8 in position 18°15.776′ N, 64°53.733′ W; thence west to point 9 in position 18°16.676′ N, 65°06.093′ W; thence north back to the origin.

(2) *St. Croix, USVI.* All waters of the Caribbean Sea surrounding St. Croix, USVI encompassed within an imaginary line connecting the following points: starting at point 1 in position 17°46.979′ N, 64°55.093′ W; thence east to point 2 in position 17°49.040′ N, 64°34.947′ W; thence southeast to point 3 in position 17°44.176′ N, 64°33.947′ W; thence southwest to point 4 in position 17°39.701′ N, 64°43.763′ W; thence west to point 5 in position 17°38.681′ N, 64°54.846′ W; thence north back to origin.

(3) *Culebra, PR.* All waters of the Atlantic Ocean surrounding Culebra, PR encompassed within an imaginary line connecting the following points: starting at point 1 in position 18°22.901′ N, 65°22.988′ W; thence east to point 2 in position 18°20.704′ N, 65°12.968′ W; thence southeast to point 3 in position 18°15.416′ N, 65°11.282′ W; thence southwest to point 4 in position 18°14.321′ N, 65°13.228′ W; thence west to point 5 in position 18°19.785′ N, 65°24.721′ W; thence northeast back to origin.

(4) *Vieques, PR.* All waters of the Caribbean Sea surrounding Vieques, PR encompassed within an imaginary line connecting the following points: starting at point 1 in position 18°05.622′ N, 65°35.782′ W; thence east southeast to point 2 in position 18°03.349′ N, 65°30.569′ W; thence east northeast to point 3 in position 18°07.076′ N, 65°14.739′ W; thence north to point 4 in position 18°10.230′ N, 65°14.970′ W; thence west to point 5 in position 18°11.113′ N, 65°29.510′ W; thence west southwest to point 6 in position 18°09.140′ N, 65°34.452′ W; thence south back to the origin.

(5) *Arecibo, PR.* All waters of the Atlantic Ocean surrounding Arecibo, PR encompassed within an imaginary line connecting the following points: starting at point 1 in position 18°28.577′ N, 66°44.834′ W; thence north to point 2 in position 18°29.939′ N, 66°44.834′ W; thence east to point 3 in position 18°29.939′ N, 66°41.644′ W; thence south to point 4 in position 18°28.865′ N, 66°41.644′ W; thence following the coastline back to origin.

(6) *San Juan, PR.* All waters of the Atlantic Ocean surrounding San Juan Harbor, PR encompassed within an imaginary line connecting the following points: starting at point 1 in position 18°28.511′ N, 66°08.370′ W; thence north to point 2 in position 18°29.430′ N, 66°08.370′ W; thence east to point 3 in position 18°29.430′ N, 66°07.503′ W; thence south to point 4 in position

18°28.336′ N, 66°07.503′ W; thence following the coastline back to origin.

(7) *Fajardo, PR.* All waters of the Atlantic Ocean surrounding Fajardo, PR encompassed within an imaginary line connecting the following points: starting at point 1 in position 18°21.311′ N, 65°36.597′ W; thence east to point 2 in position 18°21.103′ N, 65°36.855′ W; thence south to point 3 in position 18°18.639′ N, 65°36.332′ W; thence west to point 4 in position 18°17.835′ N, 65°37.679′ W; thence following the coastline back to origin.

(8) *Yabucoa, PR.* All waters of the Caribbean Sea surrounding Yabucoa, PR encompassed within an imaginary line connecting the following points: starting at point 1 in position 18°01.279′ N, 65°49.820′ W; thence east southeast to point 2 in position 18°00.511′ N, 65°48.431′ W; thence northeast to point 3 in position 18°03.181′ N, 65°47.365′ W; thence northwest to point 4 in position 18°03.546′ N, 65°48.108′ W; thence following the coastline back to origin.

(9) *Guayama and Salinas, PR.* All waters of the Caribbean Sea surrounding Guayama and Salinas, PR encompassed within an imaginary line connecting the following points: starting at point 1 in position 17°56.779′ N, 66°23.514′ W; thence south to point 2 in position 17°54.450′ N, 66°23.514′ W; thence east to point 3 in position 17°54.450′ N, 66°10.832′ W; thence north to point 4 in position 17°56.162′ N, 66°10.832′ W; thence following the coastline back to origin.

(10) *Ponce, Guayanilla and Tallaboa, PR.* All waters of the Caribbean Sea surrounding Ponce, Guayanilla and Tallaboa, PR encompassed within an imaginary line connecting the following points: starting at point 1 in position 17°57.969′ N, 66°48.489′ W; thence south to point 2 in position 17°56.181′ N, 66°48.489′ W; thence east to point 3 in position 17°56.181′ N, 66°36.833′ W; thence north to point 4 in position 17°57.830′ N, 66°36.833′ W; thence following the coastline back to origin.

(11) *Guanica, PR.* All waters of the Caribbean Sea surrounding Guanica, PR encompassed within an imaginary line connecting the following points: starting at point 1 in position 17°55.907′ N, 66°55.151′ W; thence south to point 2 in position 17°54.887′ N, 66°54.973′ W; thence east to point 3 in position 17°55.557′ N, 66°52.292′ W; thence north to point 4 in position 17°56.500′ N, 66°52.494′ W; thence following the coastline back to origin.

(12) *Mayaguez, PR.* All waters of the Caribbean Sea surrounding Mayaguez, PR encompassed within an imaginary line connecting the following points: starting at point 1 in position 18°10.159′ N, 67°10.826′ W; thence west to point 2 in position 18°10.159′ N, 67°12.539′ W; thence north to point 3 in position 18°14.371′ N, 67°12.539′ W; thence east to point 4 in position 18°14.371′ N, 67°10.405′ W; thence following the coastline back to origin.

(b) *Definitions.*

(1) *Designated representative.* The term ''designated representative'' means Coast Guard Patrol Commanders, including Coast Guard coxswains, petty officers, and other officers operating Coast Guard vessels, and federal, state, and local officers designated by or assisting the Captain of the Port San Juan in the enforcement of the regulated area.

(2) *Hurricane Port Condition YANKEE.* Set when weather advisories indicate that sustained Gale Force winds from a tropical or hurricane force storm are predicted to make landfall at the port within 24 hours.

(3) *Hurricane Port Condition ZULU.* Set when weather advisories indicate that sustained Gale Force winds from a tropical or hurricane force storm are predicted to make landfall at the port within 12 hours.

(c) *Regulations.*

(1) *Hurricane Port Condition YANKEE.* All inbound oceangoing commercial vessel traffic over 200GT are prohibited from entering any of the 11 regulated areas designated as being in Port Condition YANKEE within the COTP Zone San Juan; within 24 hours of anticipated landfall of gale force winds (39 mph) from a tropical- or hurricane-force storm; or upon the Coast Guard setting Port Condition YANKEE for inbound ocean going commercial vessel traffic over 200GT. Oceangoing commercial vessel traffic outbound will be authorized to transit through the safety zone until Port Condition ZULU.

(2) *Hurricane Port Condition ZULU.* All oceangoing commercial vessel traffic over 200GT are prohibited from transiting or remaining in any of the 11 regulated areas designated as being in Port Condition Zulu within COTP San Juan within 12 hours of anticipated landfall of a tropical storm or hurricane; or upon the Coast Guard setting of Port Condition ZULU, unless written permission is obtained from the Captain of the Port.

(3) *Emergency Closure for Other Disasters.* Any natural or other disasters that are anticipated to effect the COTP San Juan AOR will result in the prohibition of commercial vessel traffic transiting or remaining in any of the 11 regulated areas predicted to be effected as designated by the COTP San Juan = .

(4) Pursuant to the general regulations in § 165.33 of this part, entering, anchoring, mooring or transiting in the regulated areas enacted above in paragraphs (c)(1) and (c)(2) is prohibited unless authorized by the Coast Guard Captain of the Port of San Juan.

(5) Persons desiring to transit the area of the safety zone may contact the Captain of the Port at the Sector San Juan at (787) 289–2041 or via VHF radio on Channel 16 to seek permission to transit the area. If permission is granted, all persons and vessels must comply with the instructions of the Captain of the Port or his designated representative.

(6) Coast Guard Sector San Juan will attempt to notify the maritime community of periods during which these safety zones will be in effect by via a broadcast notice to mariners.

§§ 165.763, § 165.766, § 165.770, § 165.771, § 165.776, and § 165.778 [Removed and Reserved]

■ 7. Remove and reserve §§ 165.763, 165.766, 165.770, 165.771, 165.776 and 165.778.

Dated: May 5, 2013.

D.W. Pearson,

Captain, U.S. Coast Guard, Captain of the Port San Juan.

[FR Doc. 2013–14077 Filed 6–13–13; 8:45 am]

BILLING CODE 9110–04–P

DEPARTMENT OF EDUCATION

34 CFR Chapter III

Proposed priority—Rehabilitation Training: Rehabilitation Long-Term Training Program—Vocational Rehabilitation Counseling

AGENCY: Office of Special Education and Rehabilitative Services, Department of Education.

ACTION: Proposed priority.

[CFDA Number: 84.129B.]

SUMMARY: The Assistant Secretary for Special Education and Rehabilitative Services proposes a priority under the Rehabilitation Training: Rehabilitation Long-Term Training program. The Assistant Secretary may use this priority for competitions in fiscal year (FY) 2013 and later years. We take this action to focus on training in an area of national need. This priority is designed to ensure that the Department funds high quality rehabilitation counseling programs that meet rigorous standards in order to provide students with the training necessary to become qualified rehabilitation counselors capable of

meeting the current challenges facing State vocational rehabilitation (VR) agencies and related agencies.

DATES: We must receive your comments on or before July 15, 2013.

ADDRESSES: Address all comments about this notice to RoseAnn Ashby, U.S. Department of Education, 400 Maryland Avenue SW., Room 5055, Potomac Center Plaza (PCP), Washington, DC 20202–2800.

If you prefer to send your comments by email, use the following address: *roseann.ashby@ed.gov.* You must include the phrase ''Vocational Rehabilitation Counseling'' in the subject line of your electronic message.

FOR FURTHER INFORMATION CONTACT: RoseAnn Ashby. Telephone: (202) 245–7258.

If you use a telecommunications device for the deaf (TDD) or a text telephone (TTY), call the Federal Relay Service (FRS), toll free, at 1–800–877–8339.

SUPPLEMENTARY INFORMATION:

Invitation to Comment: We invite you to submit comments regarding this priority. To ensure that your comments have maximum effect in developing the final priority, we urge you to identify clearly the specific section of the priority that each comment addresses.

We invite you to assist us in complying with the specific requirements of Executive Orders 12866 and 13563 and their overall requirement of reducing regulatory burden that might result from this proposed priority. Please let us know of any further ways we could reduce potential costs or increase potential benefits while preserving the effective and efficient administration of the program.

During and after the comment period, you may inspect all public comments about this notice in room 5055, 550 12th Street SW., PCP, Washington, DC, between the hours of 8:30 a.m. and 4:00 p.m., Washington, DC time, Monday through Friday of each week except Federal holidays.

Assistance to Individuals with Disabilities in Reviewing the Rulemaking Record: On request we will provide an appropriate accommodation or auxiliary aid to an individual with a disability who needs assistance to review the comments or other documents in the public rulemaking record for this notice. If you want to schedule an appointment for this type of accommodation or auxiliary aid, please contact the person listed under **FOR FURTHER INFORMATION CONTACT**.

Purpose of Program: The Rehabilitation Long-Term Training program provides financial assistance for—

(1) Projects that provide basic or advanced training leading to an academic degree in areas of personnel shortages in rehabilitation as identified by the Secretary;

(2) Projects that provide a specified series of courses or program of study leading to the award of a certificate in areas of personnel shortages in rehabilitation as identified by the Secretary; and

(3) Projects that provide support for medical residents enrolled in residency training programs in the specialty of physical medicine and rehabilitation.

Program Authority: 29 U.S.C. 772(b).

Applicable Program Regulations: 34 CFR Parts 385 and 386.

Proposed Priority

This notice contains one proposed priority.

Vocational Rehabilitation Counseling

Background

Due to the changes in the economic circumstances in many States, people with disabilities are facing significant employment challenges. According to Krepcio and Martin (2012), some of those changes in the economy are characterized as: shifting job functions; increasing demands for certifications and technical skills; rapid changes in technology; and frequent and longer periods of unemployment, particularly for persons with disabilities. State VR agencies and their partners must respond to these changes by asking the question: In this new economy, where and how can the VR profession add true and targeted value to achieve the goal of meaningful careers and independence for persons with disabilities?

It is equally important for the Department to ask this question about rehabilitation training grants authorized under Section 302 of the Rehabilitation Act of 1973, as amended. For example, the funding priority under the Rehabilitation Long-Term Training program has not changed in over two decades. The Department believes that a significant redesign of this priority is needed in order to help ensure that personnel trained under this program are prepared to help consumers achieve high-quality employment in today's economy. In order to support the redesign of the priority, the Department conducted two activities to obtain more information about the changes affecting the VR field. These activities were designed to engage grant recipients, consumers with disabilities, stakeholder groups, employers, and other partners in a discussion about the changes in the economy and how to better prepare rehabilitation counselors to meet the current employment needs of individuals with disabilities.

First, on November 8, 2012, the Department published a ''Request for Information'' (RFI) in the **Federal Register** (77 FR 66959) pertaining to the Rehabilitation Long-Term Training program. The purpose of the RFI was to collect data focused on the following four areas: (1) Challenges facing State VR agencies, counselors, and training programs; (2) effective practices aimed at increasing the supply, qualifications, and retention of VR counselors; (3) proposed changes to the Rehabilitation Long-Term Training program that reflect the needs of VR consumers; and (4) new and emerging skill sets needed by VR counselors in order to prepare individuals with disabilities for employment in the current and future labor markets. The Department received 61 comments, some of which provided examples and additional context in response to each of these four areas, and some of which supported the current priorities of the Rehabilitation Long-Term Training program.

Second, in December 2012, the Department participated in a National Employment Conference. The theme of this conference was ''The New Economy: Re-think, Re-Align, Re-Invent,'' and included participants from State VR agencies, consumers with disabilities, businesses, stakeholders, and Federal agency partners from the Departments of Health and Human Services, Veterans Affairs, Labor, and the Social Security Administration. The goal of this conference was to explore several questions, including:

- What additional information do we need in order to broaden and strengthen our understanding of the new economy and its implications for people with disabilities?
- What are the most important aspects of our current system that should be preserved in order to meet the challenges of a new economy, and, alternatively, what aspects of our current system should be terminated as unproductive?
- What capacities do we need to develop within our system to better serve the needs of people with disabilities in the new economy?
- Finally, what relationships do we need to develop or strengthen in order to support people with disabilities in finding employment in the new economy?

The Department continues to pose many of these questions to its partners and stakeholders.

Both of these activities contributed to the redesign of a funding priority for the Rehabilitation Long-Term Training program. The goal of this priority is to increase the skills of rehabilitation counseling students so that upon graduation they are prepared to effectively meet the needs and demands of consumers with disabilities and employers. Therefore, the priority will require applicants to provide projected employment needs for and shortages of rehabilitation counselors in their region; describe how they will implement specific grant requirements to comply with 34 CFR Part 386; strengthen the curriculum for training rehabilitation counselors, including incorporating practices that will ensure students are prepared to assist individuals with disabilities to obtain competitive employment in the current and future labor market and integrating the latest technology into methods of instruction; evaluate student proficiency; and evaluate the program, including the effect the program has over a period of time to fill vacancies in the State VR agency with qualified counselors. The redesign of this priority under the Rehabilitation Long-Term Training program is the first step in a much larger effort to ensure that students enrolled in degree programs receive the necessary training to help consumers achieve high-quality employment in today's economy.

The following is a summary of data collected from the RFI that supports the need for the Department to redesign the priority under the Rehabilitation Long-Term Training program in order to respond to changes in the VR field.

First, commenters indicated that for a variety of reasons, over the next five years, there will be a shortage of qualified VR counselors to meet the needs of State VR agencies. Based on data the Department collected for FY 2012, 8,360 counselors were employed by State VR agencies. Based on their own State-level data, numerous commenters representing State VR agencies provided projections of the need for VR counselors to meet current and anticipated demands. In making these projections, several factors were considered, such as the pending retirement of current VR counselors, the scarcity of qualified counselors in certain geographical locations (e.g. rural areas), and staff turnover resulting from relatively low State salaries. Based on an aggregation of this State-level information, the Department estimates that there will be a need for 1,800 VR counselors over the next 5 years, approximately 360 new VR counselors per year. For these reasons, commenters expressed strong support for increasing the number of grants awarded under the Rehabilitation Long-Term Training program that emphasize the training of rehabilitation counselors.

Second, a number of commenters provided information to support the need for potential rehabilitation counselors to obtain master's degrees. State VR agencies, the commenters explained, are required to develop standards for their counselors under a Comprehensive System of Personnel Development (CSPD) that are consistent with any national, State-approved, or State-recognized certification, licensing, or registration requirements. Most State VR agencies have adopted the standard for a qualified rehabilitation counselor established by the Commission on Rehabilitation Counselor Certification (CRCC), which is described at *www.crccertification.com*. Meeting this standard requires a master's degree in rehabilitation counseling or a related field, and commenters indicated that many State VR agencies are unable to comply with their CSPD requirements and have resorted to hiring individuals with a bachelor's degree in order to fill vacant positions. As a result, State VR agencies must provide additional training for these individuals to meet the CSPD requirements, which may delay compliance with the Rehabilitation Act and adversely impact positive employment outcomes for consumers. Further, State VR agencies have limited funds for additional training, thereby making the Department's financial support for students obtaining a master's degree critical to ensuring that State VR agencies comply with CSPD requirements and that limited funding is used effectively.

Third, commenters noted that staff in State VR agencies need more training to effectively work with individuals who experience a wide range of disabilities, issues, and challenges. In particular, individuals with autism, individuals with mental health issues, transition-age youth with disabilities, and individuals with disabilities who have been involved in the criminal justice system comprise an increasing percentage of State VR agency caseloads. Rehabilitation counseling programs that prepare students to use current evidence-based and emerging practices to assist consumers receiving VR services to obtain and maintain employment across this range of disabilities, issues, and challenges are greatly needed.

Furthermore, rehabilitation counselors must be able to prepare consumers receiving VR services to meet the demands of the current and emerging economy, including the use of technology, so that they will be career-ready and have the resources to succeed in this new labor market. Rehabilitation counselors must also be prepared to meet employer demands and better use labor market information in the job placement process. Training programs that prepare rehabilitation counselors to address these demands are needed.

References

Fogg, N.P., Harrington, P.E., & McMahon, B.T. (2010). The impact of the Great Recession upon the unemployment of Americans with disabilities. Journal of Vocational Rehabilitation, 33, 193–202.

Krepcio, K., & Martin, M.M. (2012). The State of the U.S. Workforce System: A Time for Incremental Realignment or Serious Reform? John J. Heldrich Center for Workforce Development, research report, 1–15.

Proposed Priority

The Assistant Secretary for Special Education and Rehabilitative Services proposes a priority to fund programs leading to a master's degree in rehabilitation counseling. The goal of this priority is to increase the skills of rehabilitation counseling students so that upon successful completion they are prepared to effectively meet the needs and demands of consumers with disabilities and employers.

Under this priority, applicants must:

(a) Provide data on the current and projected employment needs and personnel shortages in State VR agencies and other related agencies as defined in 34 CFR 386.4 in their local area, region, and State, and describe how the proposed program will address those employment needs and personnel shortages.

(b) Describe how the rehabilitation counseling program will prepare rehabilitation counselors with the skills and knowledge that will help ensure that the individuals with disabilities that they serve can meet current demands and emerging trends in the labor market, including how:

(1) The curriculum aligns with evidence-based and competency-based practices in the field of rehabilitation counseling;

(2) The curriculum prepares students to meet all applicable certification standards;

(3) The curriculum addresses new or emerging consumer needs or trends at the national, State, and regional levels;

(4) The curriculum teaches students to address the needs of individuals with a range of disabilities and individuals with disabilities who are from diverse cultural backgrounds;

(5) The curriculum will train students to assess the assistive technology needs of consumers, identify the most appropriate assistive technology services and devices for assisting the consumer to obtain and retain employment, and train consumers to use such technology;

(6) The curriculum will teach students to identify employer needs in their State and local areas and to work with employers effectively in today's economy; and

(7) The latest technology is incorporated into the methods of instruction (e.g., the use of distance education to reach students who live far from the university and the use of technology to acquire labor market information).

(c) Describe their methods to:

(1) Recruit highly capable prospective students who have the potential to successfully complete the academic program, all required practicum and internship experiences, and the required service obligation;

(2) Educate potential students about the terms and conditions of the service obligation under 34 CFR 386.4, 386.34, and 386.40 through 386.43 so that they will be fully informed before accepting a scholarship;

(3) Maintain a system that ensures that students sign a payback agreement and an exit form when they exit the program, regardless of whether they drop out, are removed, or successfully complete the program;

(4) Provide academic support and counseling to students throughout the course of the academic program to ensure successful completion;

(5) Ensure that all students complete an internship in a State VR agency as a requirement for program completion;

(6) Provide career counseling, including informing students of professional contacts and networks, job leads, and other necessary resources and information to support students in successfully obtaining and retaining qualifying employment;

(7) Maintain regular contact with students upon successful program completion, (e.g., matching students with mentors in the field), to ensure that they have support during their search for qualifying employment as well as support during the initial months of their employment;

(8) Maintain regular communication with students after program exit to ensure that student contact information is up-to-date and that documentation of employment is accurate and meets the regulatory requirements for qualifying employment; and

(9) Maintain accurate information on, while safeguarding the privacy of, current and former students from the time they are enrolled in the program until they successfully meet their service obligation.

(d) Describe a plan for developing and maintaining partnerships with State VR Agencies and community-based rehabilitation service providers that includes:

(1) Coordination between the grantee and the State VR agencies and community-based rehabilitation service providers that will promote qualifying employment opportunities for students and formalized on-boarding and induction experiences for new hires;

(2) Formal opportunities for students to obtain work experiences through internships, practicum agreements, job shadowing, and mentoring opportunities; and

(3) A mechanism for ensuring that there is an assessment developed by the supervisor at the work site that details the student's strengths and areas for improvement that must be addressed, and that whenever possible, the results of this assessment are provided to the institution to ensure that future students receive all necessary preparation and training prior to program completion.

(e) Describe how students will be evaluated throughout the entire program to ensure that they are proficient in meeting the needs and demands of today's consumers and employers, including the steps that will be taken to provide assistance to a student who is not meeting academic standards or who is performing poorly in a practicum or internship setting.

(f) Describe how the program will be evaluated, including the effect the program has over a period of time on filling vacancies in the State VR agency with qualified counselors capable of providing quality services to consumers; how input from State VR agencies and community-based rehabilitation service providers will be included in the evaluation; and how the data and results from the evaluation will be used to make necessary adjustments and improvements to the program.

Types of Priorities

When inviting applications we designate the type of each priority as absolute, competitive preference, or invitational through a notice in the **Federal Register**. The effect of each type of priority follows:

Absolute priority: Under an absolute priority, we consider only applications that meet the priority (34 CFR 75.105(c)(3)).

Competitive preference priority: Under a competitive preference priority, we give competitive preference to an application by (1) awarding additional points, depending on the extent to which the application meets the priority (34 CFR 75.105(c)(2)(i)); or (2) selecting an application that meets the priority over an application of comparable merit that does not meet the priority (34 CFR 75.105(c)(2)(ii)).

Invitational priority: Under an invitational priority, we are particularly interested in applications that meet the priority. However, we do not give an application that meets the priority a preference over other applications (34 CFR 75.105(c)(1)).

Final Priority

We will announce the final priority in a notice in the **Federal Register**. We will determine the final priority after considering responses to this notice and other information available to the Department. This notice does not preclude us from proposing additional priorities, requirements, definitions, or selection criteria, subject to meeting applicable rulemaking requirements.

Note: This notice does not solicit applications. In any year in which we choose to use this priority, we invite applications through a notice in the **Federal Register**.

Executive Orders 12866 and 13563

Regulatory Impact Analysis

Under Executive Order 12866, the Secretary must determine whether this regulatory action is ''significant'' and therefore, subject to the requirements of the Executive order and subject to review by the Office of Management and Budget (OMB). Section 3(f) of Executive Order 12866 defines a ''significant regulatory action'' as an action likely to result in a rule that may—

(1) Have an annual effect on the economy of $100 million or more, or adversely affect a sector of the economy, productivity, competition, jobs, the environment, public health or safety, or State, local or tribal governments or communities in a material way (also referred to as an ''economically significant'' rule);

(2) Create serious inconsistency or otherwise interfere with an action taken or planned by another agency;

(3) Materially alter the budgetary impacts of entitlement grants, user fees, or loan programs or the rights and obligations of recipients thereof; or

(4) Raise novel legal or policy issues arising out of legal mandates, the President's priorities, or the principles stated in the Executive order.

This proposed regulatory action is not a significant regulatory action subject to review by OMB under section 3(f) of Executive Order 12866.

We have also reviewed this proposed regulatory action under Executive Order 13563, which supplements and explicitly reaffirms the principles, structures, and definitions governing regulatory review established in Executive Order 12866. To the extent permitted by law, Executive Order 13563 requires that an agency—

(1) Propose or adopt regulations only on a reasoned determination that their benefits justify their costs (recognizing that some benefits and costs are difficult to quantify);

(2) Tailor its regulations to impose the least burden on society, consistent with obtaining regulatory objectives and taking into account—among other things and to the extent practicable—the costs of cumulative regulations;

(3) In choosing among alternative regulatory approaches, select those approaches that maximize net benefits (including potential economic, environmental, public health and safety, and other advantages; distributive impacts; and equity);

(4) To the extent feasible, specify performance objectives, rather than the behavior or manner of compliance a regulated entity must adopt; and

(5) Identify and assess available alternatives to direct regulation, including economic incentives—such as user fees or marketable permits—to encourage the desired behavior, or provide information that enables the public to make choices.

Executive Order 13563 also requires an agency ''to use the best available techniques to quantify anticipated present and future benefits and costs as accurately as possible.'' The Office of Information and Regulatory Affairs of OMB has emphasized that these techniques may include ''identifying changing future compliance costs that might result from technological innovation or anticipated behavioral changes.''

We are issuing this proposed priority only on a reasoned determination that its benefits would justify its costs. In choosing among alternative regulatory approaches, we selected those approaches that maximize net benefits. Based on the analysis that follows, the Department believes that this regulatory action is consistent with the principles in Executive Order 13563.

We also have determined that this regulatory action would not unduly interfere with State, local, and tribal governments in the exercise of their governmental functions.

In accordance with both Executive orders, the Department has assessed the potential costs and benefits, both quantitative and qualitative, of this regulatory action. The potential costs are those resulting from statutory requirements and those we have determined as necessary for administering the Department's programs and activities.

The benefits of the Rehabilitation Long-Term Training program have been well established over the years through the successful completion of similar projects. This proposed priority would promote rehabilitation counseling programs that will better prepare students to assist individuals to achieve employment in today's challenging economy.

Intergovernmental Review: This program is subject to Executive Order 12372 and the regulations in 34 CFR Part 79. One of the objectives of the Executive order is to foster an intergovernmental partnership and a strengthened federalism. The Executive order relies on processes developed by State and local governments for coordination and review of proposed Federal financial assistance.

This document provides early notification of our specific plans and actions for this program.

Accessible Format: Individuals with disabilities can obtain this document in an accessible format (e.g., braille, large print, audiotape, or compact disc) on request to the program contact person listed under **FOR FURTHER INFORMATION CONTACT**.

Electronic Access to This Document: The official version of this document is the document published in the **Federal Register**. Free Internet access to the official edition of the **Federal Register** and the Code of Federal Regulations is available via the Federal Digital System at: *www.gpo.gov/fdsys.* At this site you can view this document, as well as all other documents of this Department published in the **Federal Register**, in text or Adobe Portable Document Format (PDF). To use PDF you must have Adobe Acrobat Reader, which is available free at the site.

You may also access documents of the Department published in the **Federal Register** by using the article search feature at: *www.federalregister.gov.* Specifically, through the advanced search feature at this site, you can limit your search to documents published by the Department.

Dated: June 11, 2013.

Michael K. Yudin,

Delegated the authority to perform the functions and duties of the Assistant Secretary for Special Education and Rehabilitative Services.

[FR Doc. 2013–14186 Filed 6–13–13; 8:45 am]

BILLING CODE 4000–01–P

POSTAL REGULATORY COMMISSION

39 CFR Part 3001

[Docket No. RM2012–4; Order No. 1738]

Revisions to Procedural Rules

AGENCY: Postal Regulatory Commission.

ACTION: Notice of proposed rulemaking.

SUMMARY: The Commission is proposing revisions to its rules of practice related to Postal Service requests for an advisory opinion from the Commission on a nationwide (or substantially nationwide) change in the nature of service. The proposed revisions are intended to expedite issuance of advisory opinions while preserving due process. The Commission invites public comment on the proposed revisions to assist with development of a final set of revised rules.

DATES: *Comments are due:* July 29, 2013. *Reply comments are due:* August 28, 2013.

ADDRESSES: Submit comments electronically via the Commission's Filing Online system at *http://www.prc.gov.* Those who cannot submit comments electronically should contact the person identified in the **FOR FURTHER INFORMATION CONTACT** section by telephone for advice on filing alternatives.

FOR FURTHER INFORMATION CONTACT: Stephen L. Sharfman, General Counsel, at 202–789–6820.

SUPPLEMENTARY INFORMATION: *Regulatory history:* 77 FR 23176 (April 18, 2012).

Table of Contents

I. Introduction
II. Proposed N-Case Procedures
III. Section-By-Section Analysis
IV. Conclusion
V. Ordering Paragraphs
Appendix–Initial and Reply Comments

I. Introduction

This is the second in a series of orders addressing the need for more timely completion of nature of service proceedings. The Commission's initial order was issued as an advance notice of proposed rulemaking and solicited comments on whether changes to existing procedures and regulations are

warranted and, if so, what those changes should be.[1] In that same order, the Commission invited interested persons to comment on other relevant subjects. *Id.* at 2. Comments were filed by eight parties.[2]

In this order, the Commission proposes to amend 39 CFR Part 3001, subpart D, which sets forth new procedures for all nature of service proceedings. Under the proposed procedures, nature of service proceedings would be completed within 90 days of the date on which the Postal Service files its request under 39 U.S.C. 3661 for an advisory opinion. Comments are due 45 days after publication in the **Federal Register**. Reply comments are due 75 days after publication in the **Federal Register**.

II. Proposed N-Case Procedures

A. Background

Nature of service proceedings (N-Cases) involve Commission consideration of proposals by the Postal Service for ''a change in the nature of postal services which will generally affect service on a nationwide, or substantially nationwide basis . . . .'' 39 U.S.C. 3661(b). At the conclusion of each N-Case, the Commission must issue an advisory opinion which ''conforms to the policies established under [title 39 of the United States Code].'' 39 U.S.C. 3661(c). The first N-Case advisory opinion was issued in 1976.[3] Over the intervening 30 years, four other N-Cases were initiated.[4] Since 2006, five N-Cases have been docketed.[5]

The increasing frequency of N-Cases has been accompanied by an increase in their complexity which, in turn, has increased their length. Of the five N-Cases filed since 2006, three of those cases took 8 months or more to complete. *See* ''Survey of N-Cases'' attached to APWU Reply Comments. The longest of those cases (Docket No. N2010–1) took nearly 1 year to complete. *Id.* In its comments in this proceeding and elsewhere, the Postal Service has asserted that its extremely challenging financial situation requires prompter resolution of N-Cases. *E.g.,* Postal Service Comments at 3. According to the Postal Service, the value and relevance of advice provided by the Commission in its advisory opinions depend upon timely receipt of that advice. *Id.* Moreover, although not enacted, the Senate passed legislation in the last Congress that would have required the Commission to complete N-Cases within 90 days of filing.[6]

A number of stakeholders, such as commercial mailers and postal employee organizations, have responded to the Postal Service's request for the expedition of N-Cases by pointing to legal requirements, as well as practical considerations, which, they assert, weigh against the imposition of a rigid timeframe for the completion of N-Cases. Valpak Comments at 9–11. They claim that the 90-day time limit proposed by the Postal Service is just such a rigid and unrealistic time frame. *Id.*

B. Commission's Legal Authority

The Commission's legal authority to issue advisory opinions is set forth in 39 U.S.C. 3661(c). That subsection provides that:

> [t]he Commission shall not issue its opinion on any proposal until an opportunity for hearing on the record under sections 556 and 557 of title 5 has been accorded to the Postal Service, users of the mail, and an officer of the Commission who shall be required to represent the interests of the general public. The opinion shall be in writing and shall include a certification by each Commissioner agreeing with the opinion that in his judgment the opinion conforms to the policies established under this title.

39 U.S.C. 3661(c).

The Commission's procedural rules implementing the requirements of section 3661 are set forth in 39 CFR part 3001, subpart D. Procedural rules of general applicability in 39 CFR part 3001, subpart A also apply.

The prohibition on the issuance of an advisory opinion ''until an opportunity for hearing on the record under sections 556 and 557 of title 5 has been accorded'' has historically been interpreted by the Commission to require formal, trial-type proceedings.[7] Notwithstanding this interpretation, section 3661 does not prohibit the Postal Service from implementing proposed changes in postal services prior to the conclusion of Commission proceedings. Nor does section 3661 prohibit the Postal Service from implementing proposed changes in postal services found by the Commission in its advisory opinion to be inappropriate or unwise. In other words, advisory opinions issued under section 3661 are advisory in nature.

Commission rules under 39 CFR 3001.72 require the Postal Service to file its formal request for an advisory opinion not less than 90 days in advance of the date on which the Postal Service proposes to make effective the change in the nature of postal services involved. As noted, however, three of the last five N-Case decisions since 2006, took 8 months or longer to complete.

C. Summary of Commenter Positions and Commission Analysis

C. The Postal Service believes that the Commission's goal should be to ensure N-Case decisions are issued within 90 days. Postal Service Comments at 3. In the Postal Service's view, the most effective way to improve N-Case efficiency would be to enact legislation, such as S. 1789, which amends or replaces section 3661. *Id.* at 6. In that regard, Senator Carper cites section 208 of S. 1789 as a guide to Commission action. Carper Comments at 2.

In the absence of legislative changes, the Postal Service urges the Commission to adopt a number of changes that it claims would streamline N-Cases. Postal Service Comments at 2–29. The Postal Service's principal recommendation is for the Commission to ''adopt a cap on the length of N-Cases that applies to all such cases . . . and . . . [to] adopt a multi-track approach to proceedings, with definite, shorter timeframes based on the complexity of the case . . . .'' *Id.* at 5; *see generally id.* at 5–11. Within this framework, the Postal Service offers alternatives for reforming discovery processes in N-Cases. *Id.* at 12–20. These alternatives include Commission-led discovery, as opposed to participant-led discovery; limits on the number of interrogatories; and clearer and stricter boundaries for relevance that would restrict the scope and number of discovery requests. *Id.* It also offers other suggestions independent of its

[1] Order No. 1309, Advance Notice of Proposed Rulemaking on Modern Rules of Procedure for Nature of Service Cases Under 39 U.S.C. 3661, April 10, 2012 (ANOPR).

[2] The Appendix to this order contains a list of the parties filing comments.

[3] Docket No. N75–1, Advisory Opinion Concerning a Proposed Change in the Nature of Postal Services, April 22, 1976.

[4] Docket No. N75–2, Changes in Operating Procedures Affecting First-Class Mail and Airmail; Docket No. N86–1, Change in Service, 1986, Collect on Delivery Service; Docket No. N89–1, Change in Service, 1989, First-Class Delivery Standards Realignment; and Docket No. N2006–1, Evolutionary Network Development Service Changes, 2006.

[5] Docket No. N2009–1, Station and Branch Optimization and Consolidation Initiative, 2009; Docket No. N2010–1, Six-Day to Five-Day Street Delivery and Related Service Changes, 2010; Docket No. N2011–1, Retail Access Optimization Initiative, 2011; Docket No. N2012–1, Mail Processing Network Rationalization Service Changes, 2012; and N2012–2, Post Office Structure Plan, 2012.

[6] S. 1789, 21st Century Postal Service Act of 2012, 112th Cong. § 208 (2012) (S. 1789).

[7] Docket No. N2012–1, Order No. 1183, Order Denying Motion for Reconsideration of Ruling Establishing Procedural Schedule, January 31, 2012.

main proposal for improving N-Case processing. *Id.* at 20–29.

To support its regulatory alternatives to legislative action, the Postal Service relies upon *Citizens Awareness Network* v. *U.S.,* 391 F.3d 338 (1st Cir. 2004) in asserting that the Administrative Procedure Act (APA) ''provides agencies with broad discretion to fashion procedures that make the hearing process more efficient.'' *Id.* at 4 (footnote omitted). The *Citizens Awareness* decision was cited by the Commission as an example of judicial recognition of the authority of regulatory agencies ''to place limits on the use of formal litigation procedures in certain types of cases . . . .'' ANOPR at 6. The Commission encouraged commenters to address what form any new procedures might take, and what procedural safeguards must be preserved to assure that meaningful public participation and Commission decisions are helpful to the Postal Service's decision making process as required by law. *Id.* at 7.

Several commenters oppose the Postal Service's principal recommendation regarding time limits on N-Cases. *See, e.g.,* Valpak Comments at 9–11; APWU Reply Comments at 6–9. They base their opposition, in part, on the language of section 3661 that requires ''a hearing on the record under sections 556 and 557 [of the APA].'' *See* Valpak Comments at 2. They argue further that the 90-day limit on N-Cases proposed by the Postal Service is both impossible and inconsistent with procedural due process. *See id.* at 9–11. They also take issue with the Commission's citation to the *Citizens Awareness* decision, asserting, for example, that ''*Citizens Awareness* is not, and likely will never be, controlling authority over the Commission's rules'' and is currently ''merely persuasive authority for the Commission's formulation of new rules.'' *Id.* at 13 n.17; *see also* APWU Reply Comments at 2–5.

The Public Representative believes that some changes in N-Case rules are warranted, but that the nature of those changes depends upon what ''a hearing on the record under APA sections 556 and 557'' requires. Public Representative Comments at 11. Although the Public Representative does not believe the *Citizens Awareness* decision supports major departures from current N-Case practice, she does not interpret that decision as precluding the exploration of ways to expedite N-Cases. *Id.* at 2. The Public Representative asserts that N-Case procedures must assure meaningful public participation and must foster the development of a sound record that permits the Commission to provide sound expert advice to the Postal Service in a timely manner. *Id.* at 7.

The ANOPR cited *Citizens Awareness* as support for ''the general proposition that agencies have flexibility to tailor their procedures to make hearing processes more efficient.'' ANOPR at 7. That general proposition is well settled. *See Am. Trucking Ass'ns, Inc.* v. *United States,* 627 F.2d 1313, 1321 (D.C. Cir. 1980) cited by the Court in *Citizens Awareness,* 391 F.3d at 349. As also pointed out by the Court in *Citizens Awareness,* it is equally well settled that ''[a]n agency's rules, once adopted, are not frozen in place . . . [and that] . . . [t]he opposite is true: an agency may alter its rules in light of its accumulated experience in administering them [citation omitted].'' *Id.* at 351.

What appears to be of greatest concern to commenters who have attempted to distinguish the *Citizens Awareness* decision is their suspicion that the Commission intends to implement the particular regulatory changes at issue in *Citizens Awareness,* (such as the substitution of ''open file discovery'' for traditional forms of discovery), in N-Cases solely because these changes were approved by the *Citizens Awareness* Court for use in Nuclear Regulatory Commission proceedings. This suspicion is unfounded. As the Commission expressly stated in the ANOPR, ''procedures differ from agency to agency and . . . changes in those procedures require careful consideration in the specific statutory and regulatory contexts presented.'' ANOPR at 7. It is in the context of section 3661 and experience in adjudicating N-Cases that the procedures discussed below are being proposed.

Notwithstanding their objections to the Postal Service's main proposal, several commenters have suggested various procedural changes intended to accelerate the pace of N-Cases and expedite the issuance of advisory opinions. Among the proposed changes are: (1) A proposal to require pre-filing briefings by the Postal Service; (2) a proposal to tighten the timeframes for objecting to discovery requests and for moving to compel production of discovery materials; and (3) a proposal to accelerate access to non-public materials, *e.g.,* APWU Comments at 2–3, 6, 6–7. NNA does not oppose shorter procedural schedules, provided they do not impose unrealistic litigation deadlines that place additional costs on interested parties. NNA Comments at 3. NNA does oppose the elimination of fact finding and a shorter administrative process that defeats the purpose of oversight and leads to less transparency. *Id.* These and other suggestions have been considered by the Commission in preparing the proposal that is the subject of this notice of proposed rulemaking.

D. Overview of the Proposed Procedures

Comments filed in response to the ANOPR suggest two significantly different approaches to reduce delays in the issuance of N-Case advisory opinions. On the one hand, the Postal Service proposes strict time deadlines on N-Case proceedings and offers suggested procedural changes that it believes would enable the Commission to meet those deadlines. It urges adoption of a ''multi-track approach'' that would distinguish between relatively simple N-Cases to be completed within 45 days, cases of intermediate complexity to be completed within 60 days, and all other N-Cases, which would be subject to a 90-day time limit.

In order to meet the applicable 45-day or 90-day deadline, fundamental changes would be made in the manner in which discovery and hearings would be conducted. For example, the traditional method of discovery on the Postal Service would be replaced by the method used in exigent rate cases conducted under 39 U.S.C. 3622(d)(1)(E) and 39 CFR part 3010, subpart E. Postal Service Comments at 12–16. This latter method permits participants to suggest lines of discovery to the Commission, but gives the Commission the ultimate authority to decide whether and, if so, which suggested discovery requests to use. Similarly, the Postal Service asserts that cross-examination at hearings either be eliminated entirely or more tightly controlled. *Id.* at 20–25. Other suggested procedural changes include a shortened period for intervention, *id.* at 27; the elimination of field hearings, *id.* at 25–27; and the elimination of multiple rounds of hearings, *id.* at 5.

A different approach is proposed by the commenters opposed to the Postal Service's multi-track approach. These commenters object to the establishment of time deadlines. APWU Reply Comments at 6–9; Valpak Comments at 9–11. Instead, they offer suggestions to improve and refine traditional procedures in order to reduce delays. For example, they suggest a more cooperative exchange of information prior to the filing by the Postal Service of its request for an advisory opinion. APWU Comments at 2–3. They also suggest limiting the number of discovery requests that can be made by limited participators, shortening the time periods for responding to motions and discovery requests, and improving

procedures for gaining access to relevant non-public information in the possession of the Postal Service. *Id.* at 5–7.

Based upon its initial review of the ANOPR comments, the Commission tentatively concludes that the most effective way of assuring timely issuance of advisory opinions is to adopt a time deadline for N-Case completion. Since, however, the goal of N-Cases is not simply to issue prompt opinions, but to issue meaningful opinions that adequately address relevant issues, participants must be afforded an opportunity to discover facts and challenge the factual assertions of others that bear upon relevant issues.

The imposition of time deadlines on N-Cases without fatally impairing the ability of participants to develop an adequate factual record by means of discovery and cross-examination presents a number of challenges. Perhaps the greatest challenge is to provide for adequate discovery within a restricted time period. Another significant challenge is to ensure that participant cross-examination is adequate to explore relevant issues while not unnecessarily or unduly prolonging hearings.

Although the requirement for the Postal Service to file its formal request for an advisory opinion not less than 90 days in advance of the proposed effective date has been in effect since 1973, the current rules challenge the Commission's ability to issue timely advisory opinions within such 90-day period.

In this notice, the Commission proposes procedural changes intended to preserve adequate opportunities for discovery and cross-examination within a fixed time period of 90 days from the date of filing of the Postal Service's request until the issuance of an advisory opinion. The principal elements of the proposed N-Case format are:

- A requirement that N-Cases conducted within a fixed time period provide a pre-filing phase during which a free and open exchange of information is conducted;
- Revised filing requirements intended to confirm that information was freely exchanged during the pre-filing period and which encourage submission of a complete and final service change proposal;
- The issuance of an initial notice and scheduling order based upon a pro forma procedural schedule that provides for completion of the proceeding within a fixed time period;
- Elimination of the ''limited participator'' status in N-Cases;
- Expedited filing deadlines for filing and responding to motions;
- New N-Case discovery procedures that build upon the pre-filing conference and which include a provision for an initial mandatory technical conference; a limitation on the number of written interrogatories; and the continued use of document requests, and requests for admissions traditionally used in connection with hearings conducted on the record;
- Revised procedures for prompter access to non-public materials;
- The expedited filing of rebuttal and surrebuttal testimony, if any;
- A process by which participants elect to file rebuttal testimony and a restriction on rebuttal cases that limits the scope of such cases to material issues relevant to the specific proposal made by the Postal Service in its advisory opinion request;
- A limitation on the filing of surrebuttal cases that requires a prior Commission determination that exceptional circumstances make the filing of a participant's proposed surrebuttal necessary;
- The elimination, in most cases, of field hearings;
- Revised hearing procedures providing for back-to-back hearings for the Postal Service's direct case, rebuttal testimony, if any, and surrebuttal testimony, if any;
- The implementation on a case-by-case basis of limitations on cross-examination to factual issues relevant to the Postal Service's proposal;
- A limitation on the length of initial and reply briefs and the adoption of an expedited schedule for filing such briefs; and
- The adoption of a policy of issuing advisory opinions that are targeted more precisely to the Postal Service's proposals and, when appropriate, instituting special studies that explore related subjects.

Each of these features of the proposed N-Case format is explained more fully below.

1. Generally Applicable Rules of Practice

Nature of service proceedings currently conducted under subpart D are subject to the Commission's generally applicable procedural rules in subpart A. 39 CFR 3001.71. In some cases, the proposed N-Case procedures require departures from the generally applicable subpart A procedures. Some of these departures are relatively easy to accommodate by language changes to subpart A rules. For example, the proposed revision to 39 CFR 3001.17 would add an additional element to the content requirements of Commission notices in N-Case proceedings; *see also* proposed changes to 39 CFR 3001.5(h).[8]

Other proposed changes to N-Case procedures would require more substantial changes to subpart A rules of practice. For example, significant changes would be required in the rules governing motions (39 CFR 3001.21), discovery (39 CFR 3001.25–3001.28), hearings (39 CFR 3001.30), and legal briefs (39 CFR 3001.34). To accommodate the more significant changes, the Commission proposes to exclude specific subpart A rules from use in N-Cases and, in their place, establish specific N-Case rules in subpart D to cover these subjects. In this manner, the Commission seeks to foster the continued use of subpart A rules of practice, while establishing more specialized procedures in subpart D that are needed to expedite N-Cases.

2. Pre-Filing Phase

APWU suggests that the N-Case process could be shortened if the Postal Service briefed the Commission and interested parties in advance of its filing. APWU Comments at 2. It states that the Postal Service often knows the parameters of its formal proposal months before it files its request for an advisory opinion. APWU also observes that the first few weeks after an N-Case has been filed are often without much activity because parties are reviewing the materials and determining whether intervention is warranted. *Id.* APWU asserts that pre-filing briefings would allow parties to identify potential issues of concern in advance and find and contract with experts early. It would also allow the Postal Service to pre-empt discovery requests and/or discovery disputes by addressing issues of concern in its initial filing. *Id.* at 3.

In response, the Postal Service states that absent any actual limits on N-Case procedures, it is not a foregone conclusion that this head start would actually reduce the time spent on discovery and witness preparation. Postal Service Reply Comments at 12. It maintains that parties already have ample access to baseline information about Postal Service operations in the form of Annual Compliance Reports, Annual Compliance Determinations, Sarbanes-Oxley Act disclosures, and other periodic reports and claims that it often provides advance public notice of its plans to change the nature of postal services already. *Id.* at 13.

Expanding and formalizing the pre-filing process are critical components of expedited N-Case procedures. Participants will be able to voice their concerns at an earlier point in time, which the Commission expects will aid the Postal Service in development of its formal proposal. The information

[8] On March 19, 2013, the Commission instituted a rulemaking proceeding to make certain minor changes to its rules of practice in 39 CFR Part 3001. Notice of Proposed Rulemaking Regarding Minor Adjustments to the Rules of Practice, Docket No. RM2013–1, March 19, 2013. The changes proposed to 39 CFR 3001.5(h) in Docket No. RM2013–1 are independent of the changes being proposed to that same rule in this proceeding.

obtained prior to the initial filing will also expedite the review of the Postal Service's formal proposal when it is filed and therefore reduce the need for extensive discovery while still allowing for issuance of an informed advisory opinion. The Postal Service has affirmed that, on occasion, it has provided advance notice of its own volition. The Commission believes that making this practice routine will maximize its potential benefit.

The proposal to formalize pre-filing consultations is not intended to prevent the Postal Service from conducting private discussions with individual mailers or other interested persons. Such discussions with customers, suppliers, and others can, themselves, allow the Postal Service to obtain information useful in providing, and in considering changes to, postal services. The Commission's proposal is intended to ensure that all participants with a reasonably foreseeable interest in an N-Case have a fair opportunity to discuss proposed changes in the nature of postal services with the Postal Service before a request for an advisory opinion is filed. The discussions envisioned by the Commission would be informal and off the record.

As proposed, the new rules would require potential stakeholders be consulted and invited to comment on the Postal Service's proposal. The Postal Service would be required to notify the Commission that it was commencing pre-filing discussions. Upon receipt of such notice, the Commission shall issue a notice of pre-filing conference(s), which shall be published in the **Federal Register**, and appoint a Public Representative.

3. Initiation of a Case

a. Postal Service Request

When filing a request for an advisory opinion, the Postal Service would be required to indicate that the required pre-filing conference(s) occurred. The Postal Service would also be required to specify the time and place of the conference(s) and provide a summary of discussions conducted at the conference(s). In addition, the Postal Service would be required to explain how it made a good faith effort to address criticisms and suggestions made by interested persons prior to the filing of the request. All other filing requirements previously imposed by 39 CFR 3001.72 will remain applicable, including the mandatory supporting data to be filed with the request. The discovery period would commence on the date of the filing.

b. Notice and Scheduling Order

As soon as is practicable after receipt of the Postal Service's formal request, the Commission will issue a notice and scheduling order. This order will set deadlines for initial and reply comments, and set a tentative schedule for the case including: (1) A deadline for notices of intervention; (2) the date(s) for the mandatory technical conference between the Postal Service, Commission staff, and interested parties; (3) the deadline for discovery on the Postal Service's direct case; (4) the deadline for responses to participant discovery on the Postal Service's case; (5) the deadline for participants to confirm their intent to file a rebuttal case; (6) the date for filing participant rebuttal cases, if any; (7) the date for filing motions for leave to file surrebuttal testimony and answers thereto; (8) the date for filing surrebuttal testimony, if any; (9) the date(s) for hearings on the Postal Service's direct case, rebuttal testimony, if any, and surrebuttal testimony, if any; (10) the date for filing initial briefs; (11) the date for filing reply briefs; and (12) a deadline for issuance of an advisory opinion, which is 90 days from the date of filing. These dates are subject to change for good cause only.

APWU asserts that incomplete or frequently revised proposals are a significant cause of delay in the process. APWU Comments at 3. If the Commission makes the determination that the Postal Service's formal proposal is incomplete, or if significant modifications are made while the case is in progress, deadlines for the case may be extended.

A pro forma schedule is attached to the regulations for illustrative purposes. Due dates would remain within the general range of the sample schedule, but would be adjusted to accommodate holidays and weekends. The new procedural schedule would eliminate several steps traditionally present in N-Cases, such as discovery on intervenor testimony and exhibits. The proposed schedule also reflects abbreviated motion deadlines, mandatory pre-filing discussions, and changes in traditional discovery procedures.

c. Participants

Under the current rules for N-Cases, participants must file interventions designating whether they wish to be full or limited participants in the proceeding. *See* 39 CFR 3001.20 and 3001.20a. APWU claims that ''[t]his distinction as currently applied makes no difference as to the level of participation in discovery an intervenor is allowed to undertake.'' *Id.* at 5. Therefore, it requests that the Commission consider revising the definitions of limited and full participants to better describe the type of participation in discovery allowed or required by each. *Id.*

In the interest of simplifying the process and standardizing the level of participation among all parties, the Commission proposes to eliminate the distinction between full and limited participants in an N-Case proceeding. This change is being made by excluding 39 CFR 3001.20a from subpart A rules applicable to N-Cases. *See* proposed section 3001.71. All formal intervenors shall be considered full participants and allowed equal opportunity to participate in discovery.

d. Motions

(i) In General

Under 39 CFR 3001.21 of the Commission's current rules of practice, answers to motions must be filed within 7 days. Shortening the time period for answers to motions may help reduce overall delay. The Commission is therefore proposing that the time permitted for answers to all motions, except those discussed below, be reduced from 7 days to 5 calendar days. *See* proposed 39 CFR 3001.75. This will allow the participants adequate opportunity to contest motions while also preserving a more expeditious pace of the proceeding.

(ii) Motions To Be Excused From Answering Discovery Requests

Disputes frequently arise in N-Cases over the appropriateness of discovery requests directed at the Postal Service. In some cases, the Postal Service challenges the relevance of a request because it is alleged to go beyond the scope of the Postal Service's proposed changes in postal services. In other cases, the Postal Service opposes a discovery request because of the alleged burden it would impose. Under the Commission's current rules of practice, the process of resolving these disputes begins with a Postal Service objection to a discovery request and is followed by a participant's motion to compel and a Postal Service answer to the motion to compel.

The Commission is proposing to accelerate the resolution of such disputes by eliminating the antecedent requirement of a Postal Service objection to a discovery request before commencement of the motions' practice aimed at resolving the dispute. In lieu of an initial objection to a discovery request, the Postal Service would be required to file a motion to be excused

from answering the request, within 3 days of the filing of the discovery request at issue. The proponent of the request would file an answer within 2 days, and the dispute would be resolved either by the Commission or the presiding officer. The shortened procedure, coupled with shortened filing deadlines for both the motion and answer, is designed to accelerate resolution of discovery requests.

Although the Postal Service has an obligation in all cases to provide complete and responsive answers to discovery requests, the Commission recognizes that in some cases, discovery responses could arguably be unresponsive to a request. In such cases, the participant seeking discovery could file a motion to compel a responsive answer under the new, expedited provisions governing the filing of motions.

(iii) Motions To Strike

Under the Commission's current rules of practice, motions to strike testimony must be filed at least 14 days before a witness's scheduled appearance. 39 CFR 3001.21(c). The Commission is proposing to shorten that period by requiring that motions to strike testimony be filed at least 3 calendar days before a witness's scheduled appearance, unless good cause is shown. Answers to motions to strike would also be reduced from the current 7 days to 2 calendar days.

(iv) Motions for Leave To File Surrebuttal Testimony

Proposed section 3001.91, discussed below, requires participants who wish to submit surrebuttal testimony to obtain prior leave from the Commission to file such testimony. In order to obtain leave to file, participants must file a motion under proposed subsection 3001.75(d). This new subsection would require that such motions be filed on or before the date specified in the procedural schedule established pursuant to proposed section 3001.80. The deadline for filing a motion for leave to file surrebuttal testimony will be 2 days after the filing of that rebuttal evidence which is to be addressed by the proposed surrebuttal. Answers to motions for leave to file surrebuttal testimony, if any, must be filed within 2 days.

4. Discovery

a. General

The Postal Service asserts that ''[l]engthy discovery periods contribute to the overall length of time to resolve N-Case proceedings, thereby postponing the issuance of an advisory opinion.'' Postal Service Comments at 13. Other parties contend that the opportunity for robust discovery must be preserved. *See* APWU Comments at 4; NNA Comments at 2. The Commission's proposal seeks to eliminate delay in discovery while continuing to allow participants a reasonable amount of time to obtain the necessary information.

In seeking to reconcile these objectives, the Commission proposes changes to the manner in which relevant information is obtained by participants, including addition of a mandatory technical conference. In conjunction with pre-filing discussions, the mandatory conference would enable the participants to obtain a more comprehensive understanding of the Postal Service's proposal at an earlier stage in the process.

As part of this general scheme of streamlined discovery to promote expedition, each participant would be limited to serving 25 interrogatories, which includes all initial and follow-up questions. This limit would not apply to requests for admission or to requests for production of documents or information. However, requests for production of documents and information would be limited in scope. Participants would only be required to furnish existing data in response to a request by another participant. They would not be obligated to respond to requests for data by providing data that would have to be created or projected from existing data. The Commission anticipates that the information obtained from pre-filing discussions and technical conference will obviate the need for an extensive number of interrogatories.

The Commission is also proposing changes in the procedures for more expeditious resolutions of discovery disputes. *See* Section II.D.3.d.ii., *supra.*

b. Mandatory Technical Conference

On the day(s) set forth in the scheduling order and for all days within the second and third week after the filing of its formal proposal (excluding weekends and legal holidays), the Postal Service must make witnesses available for a mandatory technical conference with Commission staff and interested participants. This conference will be conducted off the record for the purpose of clarifying various technical issues in the Postal Service's initial request and for identifying and requesting information that is relevant to evaluation of the Postal Service's proposed changes in the nature of postal services. Information obtained during the conference may also be used to seek additional information by means of formal discovery.

c. Written Interrogatories

Under the new rules, participants also would be limited to filing a total of 25 interrogatories for the entire N-Case. An interrogatory with subparts that are logically and factually subsumed within and necessarily related to the primary question will be counted as one interrogatory. This limit on the number of interrogatories is part of a comprehensive scheme to streamline discovery that would be supplemented by pre-filing consultations and mandatory technical conferences, among others.

APWU recommends shortening the time for answering interrogatories from 14 days to 10 days, and that the time for objections to interrogatories be shortened from 10 days to 5 days. APWU Comments at 6. The Commission has tentatively determined that further shortening the time for answering interrogatories from 14 days to 7 calendar days would be appropriate given the expedited nature of the discovery period.

Disputes over interrogatories would be resolved on an expedited basis under the motion procedures contained in proposed § 3001.75. Under those procedures, the Postal Service could challenge interrogatories directly in whole or in part by filing a motion to be excused from answering within 3 calendar days of service. *See* proposed section 3001.75(b).

d. Requests for Production

Requests for production of documents or information are appropriate for obtaining data actually in existence at the time of the request. Participants are not required to respond to requests for data by providing data that would have to be created or projected from existing data. The time period for responding to a request for production of documents would be shortened from 14 days to 7 calendar days.

As in the case of interrogatories, disputes over production requests would be resolved on an expedited basis under the motion procedures contained in proposed section 3001.75. Challenges to production requests could be made directly by the Postal Service's filing of a motion to be excused from answering within 5 calendar days of service. *See* section 3001.75(b).

e. Admissions

As under existing Commission practice, any participant may serve upon any other participant a written request for the admission of any

relevant, unprivileged facts, including the genuineness of any documents or exhibits to be presented at the hearing. Admissions are not considered interrogatories and therefore are not subject to the limit of 25 interrogatories. The time period for responding to a request for admission is shortened from 14 days to 7 calendar days.

As in the case of interrogatories and requests for production, disputes over requests for admissions would be resolved on an expedited basis under the motion procedures contained in proposed section 3001.75. Challenges to production requests could be made directly by the Postal Service's filing of a motion to be excused from answering. *See* proposed section 3001.75(b).

A motion to be excused from answering requests for admission would be due within 5 calendar days of service. Requests for admissions in response to which no motion to be excused from answering is filed would be deemed admitted. Answers to motions to be excused from answering would be due within 7 calendar days of the response or motion.

5. Participant Rebuttal Cases

In order to ensure the timely issuance of advisory opinions, the scope of participant rebuttal cases must be limited to the proposal that is the subject of the Postal Service's advisory opinion request. Rebuttal cases that propose, or seek to address, alternatives to the Postal Service's proposal will no longer be permitted.

If participants wish to file rebuttal testimony, they must, by the date provided for in the procedural schedule, confirm this intent in writing with the Commission. No Commission leave will be required to file rebuttal testimony. Any rebuttal testimony filed by a participant is due approximately 5 days after the confirmation of intent to file a rebuttal case is filed.

If no participant files a notice of intent to submit a rebuttal case, hearings on the Postal Service's direct case shall commence approximately 5 days after the deadline for confirming an intent to submit rebuttal and the Commission may adjust such remaining procedural dates as it deems to be appropriate.

6. Surrebuttal Cases

In some cases, the Postal Service or other participants may wish to file surrebuttal testimony. The filing of surrebuttal will only be permitted if the Commission first determines that exceptional circumstances warrant such filing. The scope of any surrebuttal must be limited to material issues relevant to the Postal Service's proposal and to the rebuttal testimony that is to be addressed by the proposed surrebuttal.

Motions for leave to file surrebuttal must be filed with the Commission by the date provided in the procedural schedule. Participants requesting to file surrebuttal evidence bear the burden of demonstrating the need for surrebuttal. The motion may only be granted if the Commission, in its discretion, determines that exceptional circumstances exist.

If a motion for leave to file surrebuttal is granted, the moving participant must file its proposed surrebuttal by the date previously established in the procedural schedule.

In the event no motion for leave to file surrebuttal is filed, hearings on the Postal Service's request and rebuttal testimony, if any, will commence approximately 5 days after the deadline for requesting leave to file surrebuttal and the Commission may adjust such remaining procedural dates as it deems appropriate.

If one or more motions for leave to submit surrebuttal are filed, hearings shall commence approximately 5 days after the date surrebuttal would have otherwise been due under the previously established procedural schedule.

7. Hearings

The rule currently governing hearings in N-Cases is rule 30 of the Commission's rules of practice. *See* 39 CFR 3001.30. A new rule applicable to hearings in N-Cases is being adopted which makes modifications in the N-Case hearing process. Under the new procedure, hearings will be held continuously and sequentially, as follows: (1) hearings on the Postal Service's case-in-chief; (2) hearings on participant rebuttal testimony, if any; and (3) hearings on surrebuttal testimony, if any.

The commencement date of hearings will depend upon whether rebuttal cases are filed and upon whether any participant requests leave to file a surrebuttal case. *See, infra,* proposed Appendix A to Part 3001, subpart D, Pro Forma N-Case Procedural Schedule, lines 8–13. For example, if, in particular cases, no participant wishes to file rebuttal or surrebuttal testimony (or if leave to file surrebuttal testimony is denied), hearings and adjustments in the procedural schedule may be made to accelerate the filing of briefs.

Hearings will be expedited by limiting cross-examination to material issues relevant to the Postal Service's proposal. Cross-examination that seeks to explore alternative proposals will not be permitted. Such proposals will, if appropriate, be considered in special studies or new public inquiry proceedings. *See* proposed rule 3001.72.

8. Briefing

The briefing process in N-Cases will be streamlined by the adoption of strict page limits and an accelerated briefing schedule. The length of initial and reply briefs shall be limited to 14,000 words and 7,000 words, respectively. Initial briefs shall be filed approximately 7 days following the conclusion of hearings. Reply briefs shall be filed 7 days thereafter.

9. Procedure for Access to Non-Public Materials

APWU claims that the current process required for intervenors to access non-public information is burdensome and causes unnecessary delays. It advocates a simplified approach for those parties who do not have a competitive relationship with the Postal Service. APWU Comments at 7. The Postal Service states that it is not evident that the Commission's procedures for protecting sensitive information actually contribute to the protracted schedules of N-Cases, but that it ''would not be averse to further exploration, in an appropriate venue, of ways in which these procedures could be made more efficient.'' Postal Service Reply Comments at 15–16.

In light of the shortened discovery period, the Commission agrees that an expeditious process is needed for making non-public information in nature of service proceedings available more promptly to qualified representatives of participants. However, the implications of APWU's proposals could extend beyond the boundaries of N-Cases and are therefore more properly the subject of review with the benefit of comments from a broader spectrum of interested persons.

The Commission notes that section 3007.40 of its regulations, 39 CFR 3007.40, provides mechanisms for expediting access to information designated as non-public by the Postal Service. In the absence of a Postal Service objection, access to non-public material can be obtained from the Commission within a few days of the request for access. *See* 39 CFR 3007.40(d)(2). For example, if a person requesting access reaches agreement with the Postal Service by the time it files its request with the Commission, that person can so represent in its filing. In such a case, the Commission would be prepared promptly to issue an order granting access.

10. Advisory Opinions and Special Studies

Proposed section 3001.72 provides that the Commission shall issue its advisory opinion no later than 90 days after the filing of the Postal Service's request unless the Commission makes a determination of good cause for extending the 90-day deadline. A determination of whether good cause exists would, of necessity, be case specific. The Commission is, however, committed to issuing advisory opinions within 90 days of filing.

As an additional means of expediting N-Cases, the Commission proposes to follow a policy of limiting the scope of its advisory opinion to the changes in postal services proposed by the Postal Service. While alternative changes might be noted, they would not be evaluated. If, in any proceeding, alternatives or related issues of significant importance arise, the Commission may, in its discretion, undertake an evaluation of such alternative or issues by means of special studies, public inquiry proceedings, or other appropriate means.

III. Section-by-Section Analysis

Subpart D revisions. Part 3001, subpart D, of title 39, Code of Federal Regulations, which deals with rules applicable to requests for changes in the nature of postal services, is amended and establishes new procedural rules applicable to Postal Service requests for advisory opinions on proposed changes in the nature of postal services.

Section 3001.71 replaces current section 3001.71. New section 3001.71 makes the rules in subpart D applicable to requests by the Postal Service pursuant to 39 U.S.C. 3661 for Commission advisory opinions on proposed changes in the nature of postal services.

Section 3001.72 is a new section that provides that, in the absence of a determination of good cause, advisory opinions in nature of service proceedings will be issued not later than 90 days following the filing of the Postal Service's request for an advisory opinion. Section 3001.72 also provides for Commission authorization of special studies of issues arising out of nature of service proceedings.

Section 3001.73 is a new section that provides for the use of calendar days in computing time periods under subpart D.

Section 3001.74 replaces section 3001.75. New section 3001.74 requires the Postal Service to serve copies of formal requests for advisory opinions on intervenors and the officer of the Commission designated to represent the interests of the general public.

Section 3001.75 is a new section that establishes shortened deadlines for the filing of motions and answers to motions in N-Cases. This section also establishes a procedure for filing motions to be excused from answering discovery requests and a procedure for requesting leave to file surrebuttal.

Section 3001.80 is a new section that describes the contents of the notice and scheduling order to be issued by the Commission after the Postal Service files a request for an advisory opinion on proposed changes in the nature of postal services.

Section 3001.81 is a new section containing pre-filing requirements. New section 3001.81 requires the Postal Service to engage in discussions with potentially affected participants before filing a request for an advisory opinion on proposed changes in the nature of postal services.

Section 3001.82 replaces section 3001.72. New section 3001.82 establishes requirements for the filing of Postal Service requests for advisory opinions in N-Cases.

Section 3001.83 replaces section 3001.74. New section 3001.83 establishes requirements for the contents of requests for advisory opinions.

Section 3001.84 replaces section 3001.73. New section 3001.84 establishes requirements for the filing by the Postal Service of prepared direct testimony with requests for advisory opinions.

Sections 3001.85 through 3001.89 are new sections that establish expedited discovery procedures in N-Cases.

Section 3001.90 is a new section governing the filing of participant rebuttal cases that respond to the Postal Service's direct case.

Section 3001.91 is a new section governing the filing of surrebuttal testimony that responds to rebuttal testimony filed under section 3001.90.

Section 3001.92 is a new section that prescribes procedures for hearings on the record in nature of service proceedings that differ from the procedures prescribed in section 3001.30.

Section 3001.93 is a new section that establishes page limitations for initial and reply briefs and provides for expedited briefing in nature of service proceedings.

Appendix A to Part 3001, subpart D, Pro Forma N-Case Procedural Schedule is a new appendix to N-Case rules that provides a template for use in establishing procedural schedules in individual cases.

Conforming revisions to other subparts. Section 3001.3 is amended to exclude specific subpart A rules of practice from use in N-Cases.

Section 3001.5(h) is amended to eliminate the distinction between participants and limited participators in N-Cases.

Section 3001.15 is amended to reflect that the computation of time periods of 5 days or less in proceedings conducted under subpart D includes Saturdays, Sundays, and federal holidays.

Section 3001.17 is amended to require the inclusion in notices of nature of service proceedings conducted under 39 CFR Part 3001, subpart D of the procedural schedule required by 39 CFR 3001.80.

Section 3001.20(a) is amended to preclude participation in N-Cases as a limited participator.

Section 3001.20(d) is amended to shorten the time period for filing oppositions to notices of intervention that are submitted in nature of service proceedings conducted under 39 CFR Part 3001, subpart D.

Section 3001.31(e) is amended to shorten the period for designating evidence received in other Commission proceedings for entry into the N-Case record. The amended subsection also shortens the period for objecting to designations.

Section 3001.31(k)(4) is amended to shorten the time periods for requesting entry into an N-Case record of evidence received in another Commission proceeding and for expending responses to requests made pursuant to this section.

IV. Conclusion

The Commission seeks comments on its proposed rules applicable to requests by the Postal Service for changes in the nature of postal services.[9]

V. Ordering Paragraphs

It is ordered:

1. Comments on proposed part 3001, subpart D of title 39, Code of Federal Regulations, are due 45 days after publication in the **Federal Register**.

2. Reply comments are due 75 days after publication in the **Federal Register**.

3. Patricia A. Gallagher, previously designated to represent the interests of the general public in this docket, will continue in that capacity.

4. The Secretary shall arrange for publication of this notice in the **Federal Register**.

[9] [Reserved]

Appendix to Order No. 1738—Initial and Reply Comments

Initial Comments

Comments of National Newspaper Association Witness on Proposed Rules for Nature of Service Proceedings, June 8, 2012 (NNA Comments)
Letter from Senator Tom Carper to the PRC, June 15, 2012 (Carper Comments)
Comments of David B. Popkin, June 18, 2012 (Popkin Comments)
Comments of the Public Representative in Response to Order No. 1309, June 18, 2012 (Public Representative Comments)
United States Postal Service Initial Comments, June 18, 2012 (Postal Service Comments)
Valpak Direct Marketing Systems, Inc. and Valpak Dealers' Association, Inc. Comments on Advance Notice of Proposed Rulemaking, June 18, 2012 (Valpak Comments)
APWU Initial Response to Advance Notice of Proposed Rulemaking on Modern Rules of Procedure For Nature of Service Cases Under 39 U.S.C. 3661, June 19, 2012 (APWU Comments) [10]
Comments of Mark Jamison, June 25, 2012 (Jamison Comments) [11]

Reply Comments

Reply Comments of the Public Representative, July 17, 2012 (Public Representative Reply Comments)
United States Postal Service Reply Comments, July 17, 2012 (Postal Service Reply Comments)
Valpak Direct Marketing Systems, Inc. and Valpak Dealers' Association, Inc. Reply Comments on Advance Notice of Proposed Rulemaking, July 17, 2012 (Valpak Reply Comments)
APWU Reply Comments to Advance Notice of Proposed Rulemaking on Modern Rules of Procedure for Nature Of Service Cases Under 39 U.S.C. 3661 [Errata], July 18, 2012 (APWU Reply Comments) [12]

List of Subjects in 39 CFR Part 3001

Administrative practice and procedure, Freedom of information, Postal Service, Sunshine Act.

For the reasons discussed in the preamble, the Commission proposes to amend chapter III of title 39 of the Code of Federal Regulations as follows:

PART 3001—RULES OF PRACTICE AND PROCEDURE

■ 1. The authority citation for part 3001 continues to read as follows:

Authority: 39 U.S.C. 404(d); 503; 504; 3661.

Subpart A—Rules of General Applicability

■ 2. Revise § 3001.3 to read as follows:

§ 3001.3 Scope of rules.

Except as otherwise provided in § 3001.71 of this chapter, the rules in this part are applicable to proceedings before the Postal Regulatory Commission under the Act, including those which involve a hearing on the record before the Commission or its designated presiding officer and, as specified in part 3005 of this chapter to the procedures for compelling the production of information by the Postal Service. They do not preclude the informal disposition of any matters coming before the Commission not required by statute to be determined upon notice and hearing.

■ 3. In § 3001.5, revise paragraph (h) to read as follows:

§ 3001.5 Definitions.

* * * * *

(h) *Participant* means any party and the officer of the Commission who is designated to represent the interests of the general public. In a proceeding that is not conducted under subpart D of this part, for purposes of § 3001.11(e), §§ 3001.12, 3001.21, 3001.23, 3001.24, 3001.29, 3001.30, 3001.31, and 3001.32 only, the term ''participant'' includes persons who are limited participators.

* * * * *

■ 4. Revise § 3001.15 to read as follows:

§ 3001.15 Computation of time.

Except as otherwise provided by law, in computing any period of time prescribed or allowed by this part, or by any notice, order, rule or regulation of the Commission or a presiding officer, the day of the act, event, or default after which the designated period of time begins to run is not to be included. The last day of the period so computed is to be included unless it is a Saturday, Sunday, or federal holiday for the Commission, in which event the period runs until the end of the next day which is next day which is neither a Saturday, Sunday, nor a federal holiday. Except in proceedings conducted under subpart D of this part, in computing a period of time which is 5 days or less, all Saturdays, Sundays, and federal holidays observed by the Commission are to be excluded.

■ 5. In § 3001.17, redesignate paragraph (c)(5) as paragraph (c)(6) and add new paragraph (c)(5) to read as follows:

§ 3001.17 Notice of proceeding.

* * * * *

(c) * * *

(5) In proceedings under subpart D of this part involving Postal Service requests for issuance of an advisory opinion, the notice issued under § 3001.17 shall include the procedural schedule provided for under § 3001.80 of this chapter; and

* * * * *

■ 6. In § 3001.20, revise paragraph (d) to read as follows:

§ 3001.20 Formal intervention.

* * * * *

(d) *Oppositions.*

(1) Except as otherwise provided in paragraph (d)(2) of this section, oppositions to notices of intervention may be filed by any participant in the proceeding no later than 10 days after the notice of intervention is filed.

(2) Oppositions to notices of interventions in proceedings conducted under subpart D of this part may be filed by any participant in the proceeding no later than 3 days after the notice of intervention is filed.

(3) Pending Commission action, an opposition to intervention shall delay on a day-for-day basis, the date for responses to discovery requests filed by that intervenor.

* * * * *

■ 7. In § 3001.20a, revise the introductory text and republish paragraph (a) to read as follows:

§ 3001.20a Limited participation by persons not parties.

Except for cases noticed for a proceeding under subpart D of this part, any person may, notwithstanding the provisions of § 3001.20, appear as a limited participator in any case that is noticed for a proceeding pursuant to § 3001.17(a) in accordance with the following provisions:

(a) *Form of intervention.* Notices of intervention as a limited participator shall be in writing, shall set forth the nature and extent of the intervenor's interest in the proceeding, and shall conform to the requirements of §§ 3001.9 through 3001.12.

* * * * *

■ 8. In § 3001.31, revise paragraphs (e) and (k)(4) to read as follows:

§ 3001.31 Evidence.

* * * * *

[10] Accompanying the APWU Comments was a Motion for Late Acceptance of APWU Initial Response to Advance Notice of Proposed Rulemaking on Modern Rules of Procedure for Nature of Service Cases Under 39 U.S.C. 3661, June 19, 2012. The motion is granted.

[11] Accompanying the Jamison Comments was a Motion for Late Acceptance of Mark Jamison Comments to Advance Notice of Proposed Rulemaking on Modern Rules of Procedure for Nature of Service Cases Under 39 U.S.C. 3661, June 25, 2012. The motion is granted.

[12] These reply comments were filed on July 18, 2012, to correct a number of typographical errors contained in reply comments filed the day before. *See* Notice of Errata APWU Reply Comments to Advance Notice of Proposed Rulemaking on Modern Rules of Procedure for Nature of Service Cases Under 39 U.S.C. 3661, July 18, 2012. The corrected July 18, 2012 APWU Reply Comments are hereby accepted for filing.

(e) *Designation of evidence from other Commission dockets.* (1) Participants may request that evidence received in other Commission proceedings be entered into the record of the current proceeding. These requests shall be made by motion, shall explain the purpose of the designation, and shall identify material by page and line or paragraph number.

(2) In proceedings conducted under subpart D of this part, these requests must be made at least 6 days before the date for filing the participant's direct case. Oppositions to motions for designations and/or requests for counter-designations shall be filed within 3 days. Oppositions to requests for counter-designations are due within 2 days.

(3) In all other proceedings subject to this section, these requests must, in the absence of extraordinary circumstances, be made at least 28 days before the date for filing the participant's direct case. Oppositions to motions for designations and/or requests for counter-designations shall be filed within 14 days. Oppositions to requests for counter-designations are due within 7 days.

(4) In all proceedings subject to this section, the moving participant must submit two copies of the identified material to the Secretary at the time requests for designations and counter-designations are made.

* * * * *

(k) * * *

(4) *Expedition.* The offeror shall expedite responses to requests made pursuant to this section. Responses shall be served on the requesting party, and notice thereof filed with the Secretary in accordance with the provisions of § 3001.12:

(i) No later than 3 days after a request is made under paragraph (e)(2) of this section; or

(ii) No later than 14 days after a request is made under paragraph (e)(3) of this section.

■ 10. Revise Subpart D of part 3001 to read as follows:

Subpart D—Rules Applicable to Requests for Changes in the Nature of Postal Services Requests for Changes in the Nature of Postal Services

Sec.
3001.71 Applicability.
3001.72 Advisory opinion and special studies.
3001.73 Computation of time.
3001.74 Service by the Postal Service.
3001.75 Motions.
3001.76–3001.79 [Reserved]
3001.80 Procedural schedule.
3001.81 Pre-filing requirements.
3001.82 Filing of formal requests.
3001.83 Contents of formal requests.
3001.84 Filing of prepared direct evidence.
3001.85 Mandatory technical conference.
3001.86 Discovery—in general.
3001.87 Interrogatories.
3001.88 Production of documents.
3001.89 Admissions.
3001.90 Rebuttal testimony.
3001.91 Surrebuttal testimony.
3001.92 Hearings.
3001.93 Initial and reply briefs.
Appendix A to Subpart D of Part 3001—Pro Forma N-Case Procedural Schedule

§ 3001.71 Applicability.

The rules in this subpart govern the procedure with regard to proposals of the Postal Service pursuant to 39 U.S.C. 3661 requesting from the Commission an advisory opinion on changes in the nature of postal services that will generally affect service on a nationwide or substantially nationwide basis. The Rules of General Applicability in subpart A of this part are also applicable to proceedings conducted pursuant to this subpart except that § 3001.20a (limited participation by persons not parties); § 3001.21 (Motions); § 3001.25 (Discovery—general policy); § 3001.26 (Interrogatories for purposes of discovery); § 3001.27 (Requests for production of documents or things for the purpose of discovery); § 3001.30 (Hearings); § 3001.33 (Depositions); and § 3001.34 (Briefs) do not apply in proceedings conducted under this subpart.

§ 3001.72 Advisory opinion and special studies.

(a) *Issuance of opinion.* In the absence of a determination of good cause for extension, the Commission shall issue an advisory opinion in proceedings conducted under this subpart not later than 90 days following the filing of the Postal Service's request for an advisory opinion.

(b) *Special studies.* Advisory opinions shall address the specific changes proposed by the Postal Service in the nature of postal services. If, in any proceeding, alternatives or related issues of significant importance arise, the Commission may, in its discretion, undertake an evaluation of such alternative or issues by means of special studies, public inquiry proceedings, or other appropriate means.

§ 3001.73 Computation of time.

In computing any period of time prescribed or allowed by this subpart, the term ''day'' means a calendar day unless explicitly specified otherwise. The last day of the period so computed is to be included unless it is a Saturday, Sunday, or federal holiday for the Commission, in which event the period runs until the end of the next day which is neither a Saturday, Sunday, or federal holiday. A part-day holiday shall be considered as other days and not as a federal holiday.

§ 3001.74 Service by the Postal Service.

By filing its request electronically with the Commission, the Postal Service is deemed to have effectively served copies of its formal request and its prepared direct evidence upon those persons, including the officer of the Commission, who participated in the pre-filing conference held under § 3001.81. The Postal Service shall be required to serve hard copies of its formal request and prepared direct evidence only upon those persons who have notified the Postal Service, in writing, during the pre-filing conference(s), that they do not have access to the Commission's Web site.

§ 3001.75 Motions.

(a) *In general.* (1) An application for an order or ruling not otherwise specifically provided for in this subpart shall be made by motion. A motion shall set forth with particularity the ruling or relief sought, the grounds and basis therefor, and the statutory or other authority relied upon, and shall be filed with the Secretary and served pursuant to the provisions of §§ 3001.9 through 3001.12 of this chapter. A motion to dismiss proceedings or any other motion that involves a final determination of the proceeding, any motion under § 3001.91 or a motion that seeks to extend the deadline for issuance of an advisory opinion shall be addressed to the Commission. After a presiding officer is designated in a proceeding, all other motions in that proceeding, except those filed under part 3007 of this chapter, shall be addressed to the presiding officer.

(2) Within 5 days after a motion is filed, or such other period as the Commission or presiding officer in any proceeding under this subpart may establish, any participant to the proceeding may file and serve an answer in support of or in opposition to the motion pursuant to §§ 3001.9 to 3001.12 of this chapter. Such an answer shall state with specificity the position of the participant with regard to the ruling or relief requested in the motion and the grounds and basis and statutory or other authority relied upon. Unless the Commission or presiding officer otherwise provides, no reply to an answer or any further responsive document shall be filed.

(b) *Motions to be excused from answering discovery requests.* (1) A motion to be excused from answering discovery requests shall be filed with

the Commission in conformance with this section within 3 days of the filing of the interrogatory, request for production, or request for admissions to which the motion is directed. If a motion to be excused from answering is made part of an interrogatory, request for production, or request for admissions, the part to which objection is made shall be clearly identified. Claims of privilege shall identify the specific evidentiary privilege asserted and state the reasons for its applicability. Claims of undue burden shall state with particularity the effort that would be required to answer or respond to the request, providing estimates of costs and workhours required, to the extent possible.

(2) An answer to a motion to be excused from answering a discovery request shall be filed within 2 days of the filing of the motion in conformance with § 3001.75. The text of the discovery request and any answer previously provided by the Postal Service shall be included as an attachment to the answer.

(3) Unless the Commission or the presiding officer grants the motion to be excused from answering, the Postal Service shall answer the interrogatory, production request, or request for admission. Answers shall be filed in conformance with §§ 3001.9 through 3001.12 of this chapter within 3 days of the date on which a motion to be excused from answering is denied.

(4) The Commission or the presiding officer may impose such terms and conditions as are just and may, for good cause, issue a protective order as provided in § 3001.26(g) of this chapter, including an order limiting or conditioning interrogatories, requests for production, and requests for admissions as justice requires to protect the Postal Service from undue annoyance, embarrassment, oppression, or expense.

(c) *Motions to strike.* Motions to strike are requests for extraordinary relief and are not substitutes for briefs or rebuttal evidence in a proceeding. A motion to strike testimony or exhibit materials must be submitted in writing at least 3 days before the scheduled appearance of a witness, unless good cause is shown. Responses to motions to strike are due within 2 days.

(d) *Motions for leave to file surrebuttal testimony.* Motions for leave to file surrebuttal testimony submitted pursuant to § 3001.91 and any answers thereto must be filed and served on or before the dates provided in the procedural schedule established by the Commission.

§§ 3001.76–3001.79 [Reserved]

§ 3001.80 Procedural schedule.

(a) *Notice.* Subject to paragraph (b) of this section, the Commission shall include in the notice of proceeding issued under § 3001.17 of this chapter a procedural schedule based upon the pro forma schedule set forth in Appendix A of this part. The procedural schedule shall include:

(1) A deadline for notices of interventions;

(2) The date(s) for the mandatory technical conference between the Postal Service, Commission staff, and interested parties;

(3) The deadline for discovery on the Postal Service's direct case;

(4) The deadline for responses to participant discovery on the Postal Service's case;

(5) The deadline for participants to confirm their intent to file a rebuttal case;

(6) The date for filing participant rebuttal testimony, if any;

(7) The dates for filing motions for leave to file surrebuttal testimony and answers thereto;

(8) The date for filing surrebuttal, if any;

(9) The date(s) for hearings on the Postal Service's direct case, rebuttal testimony, and surrebuttal testimony, if any;

(10) The date for filing initial briefs;

(11) The date for filing reply briefs; and

(12) A deadline for issuance of an advisory opinion which is 90 days from the date of filing.

(b) *Changes for good cause.* These dates are subject to change for good cause only.

(c) *Incomplete request.* If at any time the Commission determines that the Postal Service's request is incomplete or that changes made subsequent to its filing significantly modify the request, the Commission may extend the deadlines established or take any other action as justice may require.

§ 3001.81 Pre-filing requirements.

(a) *Pre-filing conference required.* Prior to the Postal Service filing a request that the Commission issue an advisory opinion on a proposed change in the nature of postal services subject to the procedures established in this subpart, the Postal Service shall conduct one or more pre-filing conference(s) with interested persons in the proceeding.

(b) *Purpose.* The purpose of a pre-filing conference under this section is to expedite consideration of the Postal Service's request for the issuance of advisory opinions by informing interested persons of the Postal Service's proposal; by providing an opportunity for interested persons to give feedback to the Postal Service that can be used by the Postal Service to modify or refine its proposal before it is filed at the Commission; and by identifying relevant issues and information needed to address those issues during proceedings at the Commission.

(c) *Notice.* The Postal Service shall file with the Commission a notice of its intent to conduct any pre-filing conference(s) at least 10 days before the first scheduled conference. The notice filed by the Postal Service shall include a schedule of proposed date(s) and location(s) for the conference(s). Upon receipt of such notice, the Commission shall issue a notice of pre-filing conference(s), which shall be published in the **Federal Register** and appoint a Public Representative.

(d) *Nature of conferences.* Discussions during the pre-filing conference(s) under this section shall be informal and off the record. No formal record will be created during a pre-filing conference.

(e) *Informal meetings.* Interested persons may meet outside the context of a pre-filing conference, among themselves or with the Postal Service, individually or in groups, to discuss the proposed changes in the nature of postal services.

§ 3001.82 Filing of formal requests.

Whenever the Postal Service determines to request that the Commission issue an advisory opinion on a proposed change in the nature of postal services subject to this subpart, the Postal Service shall file with the Commission a formal request for such an opinion in accordance with the requirements of §§ 3001.9 to 3001.11 and § 3001.83. The request shall be filed not less than 90 days before the proposed effective date of the change in the nature of postal services involved. Within 5 days after the Postal Service has filed a formal request for an advisory opinion in accordance with this section, the Secretary shall lodge a notice thereof with the director of the Federal Register for publication in the **Federal Register**.

§ 3001.83 Contents of formal requests.

(a) *General requirements.* A formal request filed under this subpart shall include such information and data and such statements of reasons and basis as are necessary and appropriate to fully inform the Commission and interested persons of the nature, scope, significance, and impact of the proposed

change in the nature of postal services and to show that the change in the nature of postal services is in accordance with and conforms to the policies established under title 39, United States Code.

(b) *Specific information.* A formal request shall include:

(1) A detailed statement of the present nature of the postal services proposed to be changed and the change proposed;

(2) The proposed effective date for the proposed change in the nature of postal services;

(3) A full and complete statement of the reasons and basis for the Postal Service's determination that the proposed change in the nature of postal services is in accordance with and conforms to the policies of title 39, United States Code;

(4) A statement that the Postal Service has completed the pre-filing conference(s) required by § 3001.81, including the time and place of each conference and a summary of discussions at the pre-filing conference(s);

(5) The prepared direct evidence required by § 3001.84;

(6) The name of an institutional witness capable of providing information relevant to the Postal Service's proposal that is not provided by other Postal Service witnesses; and

(7) Confirmation that Postal Service witnesses, including its institutional witness, will be available for the mandatory technical conference provided for in § 3001.85.

(c) *Additional information.* The Commission may request additional information from the Postal Service concerning a formal request.

(d) *Reliance on prepared direct evidence.* The Postal Service may incorporate detailed data, information, and statements of reason or basis contained in prepared direct evidence submitted under paragraph (b)(5) of this section into its formal request by reference to specific portions of the prepared direct evidence.

§ 3001.84 Filing of prepared direct evidence.

As part of a formal request for an advisory opinion under this subpart, the Postal Service shall file all of the prepared direct evidence upon which it proposes to rely in the proceeding on the record before the Commission to establish that the proposed change in the nature of postal services is in accordance with and conforms to the policies of title 39, United States Code. Such prepared direct evidence shall be in the form of prepared written testimony and documentary exhibits which shall be filed in accordance with § 3001.31 of this chapter.

§ 3001.85 Mandatory technical conference.

(a) *Date.* A date for a mandatory technical conference shall be included in the procedural schedule required by § 3001.80. The date for this technical conference shall be set based upon the pro forma schedule set forth in Appendix A of this subpart. The conference shall be held at the offices of the Commission.

(b) *Witnesses.* The Postal Service shall make available at the technical conference each witness whose prepared direct testimony was filed pursuant to § 3001.84.

(c) *Purpose.* The purpose of the technical conference is to provide an informal, off-the-record opportunity for participants, the officer of the Commission representing interests of the general public, and Commission staff to clarify technical issues and to identify and request information relevant to an evaluation of the nature of changes to postal services proposed by the Postal Service.

(d) *Relation to discovery process.* Information obtained during the mandatory technical conference may be used to discover additional relevant information by means of the formal discovery mechanisms provided for in §§ 3001.85 through 3001.89.

(e) *Record.* Information obtained during, or as a result of, the mandatory technical conference is not part of the decisional record unless admitted under the standards of § 3001.31(a) of this chapter.

§ 3001.86 Discovery—in general.

(a) *Purpose.* The rules in this subpart allow discovery against the Postal Service that is reasonably calculated to lead to admissible evidence during a proceeding. The notice and scheduling order issued pursuant to § 3001.80 shall provide that discovery will be scheduled to end at least 3 days prior to the commencement of hearings.

(b) *Informal discovery.* The discovery procedures of this section, § 3001.85, and §§ 3001.87 through 3001.89 are not exclusive. Participants are encouraged to engage in informal discovery whenever possible to clarify exhibits and testimony. The results of these efforts may be introduced into the record by stipulation, by supplementary testimony or exhibit, or by other appropriate means. In the interest of reducing motion practice, participants also are expected to use informal means to clarify questions and to identify portions of discovery requests considered overbroad or burdensome.

(c) *Failure to obey orders or rulings.* If the Postal Service fails to obey an order of the Commission or ruling of the presiding officer to provide or permit discovery pursuant to this section or §§ 3001.85 through 3001.89, the Commission or the presiding officer may issue orders or rulings in regard to the failure as are just. These orders or rulings may, among other things:

(1) Direct that certain designated facts are established for the purposes of the proceeding;

(2) Prohibit the Postal Service from introducing certain designated matters in evidence; or

(3) Strike certain evidence, requests, pleadings, or parts thereof.

§ 3001.87 Interrogatories.

(a) *Service and contents.* In the interest of expedition and limited to information which appears reasonably calculated to lead to the discovery of admissible evidence, any participant in a proceeding may propound to the Postal Service 25 written, sequentially numbered interrogatories, by witness, requesting non-privileged information relevant to the subject matter of the proceeding. An interrogatory with subparts that are logically and factually subsumed within and necessarily related to the primary question will be counted as one interrogatory. The Postal Service shall answer each interrogatory and furnish such information as is available. The participant propounding the interrogatories shall file them with the Commission in conformance with §§ 3001.9 through 3001.12 of this chapter. Follow-up interrogatories to clarify or elaborate on the answer to an earlier discovery request may be filed after the period for intervenor discovery on the Postal Service case ends if the interrogatories are filed within 7 days of receipt of the answer to the previous interrogatory. In extraordinary circumstances, follow-up interrogatories may be filed not less than 6 days prior to the filing date for the participant's rebuttal testimony.

(b) *Answers.* (1) Answers to interrogatories shall be prepared so that they can be incorporated into the record as written cross-examination. Each answer shall begin on a separate page, identify the individual responding and the relevant testimony number, if any, the participant who propounded the interrogatory, and the number and text of the question.

(2) Each interrogatory shall be answered separately and fully in writing by the individual responsible for the answer, unless it is objected to, in which event the reasons for objection shall be stated in a motion to be excused

from answering in the manner prescribed by paragraph (c) of this section.

(3) An interrogatory otherwise proper is not necessarily objectionable because an answer would involve an opinion or contention that relates to fact or the application of law to fact, but the Commission or presiding officer may order that such an interrogatory need not be answered until a prehearing conference or other later time.

(4) Answers filed by the Postal Service shall be filed in conformance with §§ 3001.9 through 3001.12 of this chapter within 7 days of the filing of the interrogatories or within such other period as may be fixed by the Commission or presiding officer. Any other period fixed by the Commission or presiding officer shall end before the conclusion of the hearing.

(c) *Motion to be excused from answering.* The Postal Service may, in lieu of answering an interrogatory, file a motion pursuant to § 3001.75(b) to be excused from answering.

(d) *Supplemental answers.* The Postal Service has a duty to timely amend a prior answer if it obtains information upon the basis of which it knows that the answer was incorrect when made or is no longer true. The Postal Service shall serve supplemental answers to update or to correct responses whenever necessary, up until the date the answer could have been accepted into evidence as written cross-examination. The Postal Service shall indicate whether the answer merely supplements the previous answer to make it current or whether it is a complete replacement for the previous answer.

§ 3001.88 Production of documents.

(a) *Service and contents.*

(1) In the interest of expedition and limited to information which appears reasonably calculated to lead to the discovery of admissible evidence, any participant may serve on the Postal Service a request to produce and permit the participant making the request, or someone acting on behalf of the participant, to inspect and copy any designated documents or things that constitute or contain matters, not privileged, that are relevant to the subject matter involved in the proceeding and that are in the custody or control of the Postal Service.

(2) The request shall set forth the items to be inspected either by individual item or category, and describe each item and category with reasonable particularity, and shall specify a reasonable time, place, and manner of making inspection. The participant requesting the production of documents or items shall file its request with the Commission in conformance with §§ 3001.9 through 3001.12 of this chapter.

(b) *Answers.* (1) The Postal Service shall file an answer to a request under paragraph (a) of this section with the Commission in conformance with §§ 3001.9 through 3001.12 of this chapter within 5 days after the request is filed, or within such other period as may be fixed by the Commission or presiding officer. The answer shall state, with respect to each item or category, whether inspection will be permitted as requested.

(2) If the Postal Service objects to an item or category, the Postal Service shall state the reasons for objection in a motion to be excused from answering as prescribed by paragraph (c) of this section.

(c) *Motions to be excused from answering.* The Postal Service may, in lieu of answering a request for production, file a motion pursuant to § 3001.75(b) to be excused from answering.

§ 3001.89 Admissions.

(a) *Service and content.* In the interest of expedition, any participant may serve upon the Postal Service a written request for the admission of any relevant, unprivileged facts, including the genuineness of any documents or exhibits to be presented in the hearing. The admission shall be for purposes of the pending proceeding only. The participant requesting the admission shall file its request with the Commission in conformance with §§ 3001.9 through 3001.12 of this chapter.

(b) *Answers.* (1) A matter for which admission is requested shall be separately set forth in the request and is deemed admitted unless, within 7 days after the request is filed, or within such other period as may be established by the Commission or presiding officer, the Postal Service files a written answer or motion to be excused from answering pursuant to paragraph (c) of this section. Postal Service answers to requests for admission shall be filed with the Commission in conformance with §§ 3001.9 through 3001.12 of this chapter.

(2) If the answer filed by the Postal Service does not admit a matter asserted in the participant's request, it must either specifically deny the matter or explain in detail why it cannot truthfully admit or deny the asserted matter. When good faith requires, the Postal Service must admit a portion of the asserted matter and either deny or qualify the remaining portion of such asserted matter. Lack of knowledge for failing to admit or deny can be invoked only after reasonable inquiry if the information already possessed or reasonably obtainable is insufficient to enable an admission or denial.

(3) Grounds for objection to requests for admission must be stated. Objections cannot be based solely upon the ground that the request presents a genuine issue for trial.

(c) *Motion to be excused from answering.* The Postal Service may, in lieu of answering a request for admission, file a motion pursuant to § 3001.75(b) to be excused from answering.

§ 3001.90 Rebuttal testimony.

(a) *Timing.* Any participant may file rebuttal testimony on or before the date established for that purpose by the procedural schedule issued by the Commission pursuant to § 3001.80. Hearing on rebuttal testimony shall proceed as set forth in the procedural schedule.

(b) *Limitations.* The scope of rebuttal testimony shall be limited to material issues relevant to the specific proposal made by the Postal Service. Rebuttal testimony shall not propose, or seek to address, alternatives to the Postal Service's proposal.

(c) *Intent to file rebuttal testimony.* If a participant wishes to file rebuttal testimony, it must file a document confirming its intent to file rebuttal testimony with the Commission by the date provided in the procedural schedule.

(d) *Adjustment of dates.* If no participant files a confirmation of intent to file rebuttal testimony on or before the date established by the procedural schedule issued by the Commission pursuant to § 3001.80, the Commission may adjust other dates in the procedural schedule as it deems to be necessary and appropriate.

§ 3001.91 Surrebuttal testimony.

(a) *Scope.* Surrebuttal testimony shall be limited to material issues relevant to the Postal Service's proposal and to the rebuttal testimony which the surrebuttal testimony seeks to address. Testimony that exceeds the scope of the Postal Service's proposal or rebuttal testimony shall not be permitted.

(b) *Motion for leave to file surrebuttal.* A participant who wishes to file surrebuttal testimony must obtain prior approval by filing with the Commission a motion for leave to file surrebuttal pursuant to § 3001.75(d) on or before the date provided in the procedural schedule established by the Commission. The motion must

summarize the surrebuttal testimony the participant wishes to file and must identify and explain exceptional circumstances that require the filing of such testimony. The moving participant bears the burden of demonstrating exceptional circumstances that warrant a grant of the motion. Answers to such motions may be filed as provided in § 3001.75(d).

(c) *Deadline for filing surrebuttal authorized by the Commission.* In the event the Commission grants the motion for leave to file surrebuttal testimony, the moving participant must file its proposed surrebuttal testimony by the date provided in the procedural schedule established pursuant to § 3001.80.

(d) *Adjustment of procedural dates.* If no participant files a motion for leave to file surrebuttal testimony, or if the Commission denies all such motions as may be filed, the remaining dates in the procedural schedule may be adjusted by the Commission as it deems to be necessary and appropriate.

§ 3001.92 Hearings.

(a) *Initiation.* Hearings for the purpose of taking evidence shall be initiated by the issuance of a notice and scheduling order pursuant to § 3001.80.

(b) *Presiding officer.* All hearings shall be held before the Commission sitting en banc with a duly designated presiding officer.

(c) *Entering of appearances.* The Commission or the presiding officer before whom the hearing is held will cause to be entered on the record all appearances together with a notation showing in whose behalf each such appearance has been made.

(d) *Order of procedure.* In requests for advisory opinions before the Commission, the Postal Service shall be the first participant to present its case. Unless otherwise ordered by the Commission, the presiding officer shall direct the order of presentation of all other participants and issue such other procedural orders as may be necessary to assure the orderly and expeditious conclusion of the hearing.

(e)(1) *Presentations by participants.* Any participant shall have the right in public hearings to present evidence relevant to the Postal Service's proposal, cross-examine (limited to testimony adverse to the participant conducting the cross-examination), object, move, and argue. The participant's presentation shall be in writing and may be accompanied by a trial brief or legal memoranda. (Legal memoranda on matters at issue will be welcome at any stage of the proceeding.) When objections to the admission or exclusion of evidence before the Commission or the presiding officer are made, the grounds relied upon shall be stated. Formal exceptions to rulings are unnecessary.

(2) *Written cross-examination.* Written cross-examination will be utilized as a substitute for oral cross-examination whenever possible, particularly to introduce factual or statistical evidence. Designations of written cross-examination shall be served in accordance with §§ 3001.9 through 3001.12 of this chapter no later than 3 days before the scheduled appearance of a witness. Designations shall identify every item to be offered as evidence, listing the participant who initially posed the discovery request, the witness and/or party to whom the question was addressed (if different from the witness answering), the number of the request and, if more than one answer is provided, the dates of all answers to be included in the record. (For example, ''OCA–T1–17 to USPS witness Jones, answered by USPS witness Smith (March 1, 1997) as updated (March 21, 1997)).'' When a participant designates written cross-examination, two hard copies of the documents to be included shall simultaneously be submitted to the Secretary of the Commission. The Secretary of the Commission shall prepare for the record a packet containing all materials designated for written cross-examination in a format that facilitates review by the witness and counsel. The witness will verify the answers and materials in the packet, and they will be entered into the transcript by the presiding officer. Counsel may object to written cross-examination at that time, and any designated answers or materials ruled objectionable will not be admitted into the record.

(3) *Oral cross-examination.* Oral cross-examination will be permitted for clarifying written cross-examination and for testing assumptions, conclusions or other opinion evidence. Notices of intent to conduct oral cross-examination shall be filed 3 or more days before the announced appearance of the witness and shall include specific references to the subject matter to be examined and page references to the relevant direct testimony and exhibits. A participant intending to use complex numerical hypotheticals, or to question using intricate or extensive cross-references, shall provide adequately documented cross-examination exhibits for the record. Copies of these exhibits shall be filed at least 2 days (including 1 working day) before the scheduled appearance of the witness. They may be filed online or delivered in hardcopy form to counsel for the witness, at the discretion of the participant. If a participant has obtained permission to receive service of documents in hardcopy form, hardcopy notices of intent to conduct oral cross-examination of witnesses for that participant shall be delivered to counsel for that participant and served 3 or more working days before the announced appearance of the witness. Cross-examination exhibits shall be delivered to counsel for the witness at least 2 days (including 1 working day) before the scheduled appearance of the witness.

(f) *Limitations on presentation of the evidence.* The taking of evidence shall proceed with all reasonable diligence and dispatch, and to that end, the Commission or the presiding officer may limit appropriately:

(1) The number of witnesses to be heard upon any issue;

(2) The examination by any participant to specific issues; and

(3) The cross-examination of a witness to that required for a full and true disclosure of the facts necessary for exploration of the Postal Service's proposal, disposition of the proceeding, and the avoidance of irrelevant, immaterial, or unduly repetitious testimony.

(g) *Motions during hearing.* After a hearing has commenced in a proceeding, a request may be made by motion to the presiding officer for any procedural ruling or relief desired. Such motions shall set forth the ruling or relief sought, and state the grounds therefor and statutory or other supporting authority. Motions made during hearings may be stated orally upon the record, except that the presiding officer may require that such motions be reduced to writing and filed separately. Any participant shall have the opportunity to answer or object to such motions at the time and in the manner directed by the presiding officer.

(h) *Rulings on motions.* The presiding officer is authorized to rule upon any motion not reserved for decision by the Commission. No ruling on motions to dismiss, motions that involve or constitute a final determination of the proceeding, motions under § 3001.91, or motions that seek to extend the deadline for issuance of an advisory opinion may be made by the presiding officer. This section shall not preclude a presiding officer from referring any motion made in hearing to the Commission for ultimate determination.

(i) *Transcript corrections.* Corrections to the transcript of a hearing shall not be requested except to correct a material

substantive error in the transcription made at the hearing.

§ 3001.93 Initial and reply briefs.

(a) *When filed.* At the close of the taking of testimony in any proceeding, participants may file initial and reply briefs. The dates for filing initial and reply briefs shall be established in the procedural schedule issued pursuant to § 3001.80. Such dates may be modified by subsequent order issued by the Commission or the presiding officer.

(b) *Contents.* Each brief filed with the Commission shall be as concise as possible and shall include the following in the order indicated:

(1) A subject index with page references, and a list of all cases and authorities relied upon, arranged alphabetically, with references to the pages where the citation appears;

(2) A concise statement of the case from the viewpoint of the filing participant;

(3) A clear, concise, and definitive statement of the position of the filing participant as to the Postal Service request;

(4) A discussion of the evidence, reasons, and authorities relied upon with precise references to the record and the authorities; and

(5) Proposed findings and conclusions with appropriate references to the record or the prior discussion of the evidence and authorities relied upon.

(c) *Length.* Initial briefs shall not exceed 14,000 words. Reply briefs shall not exceed 7,000 words. Participants shall attest to the number of words contained in their brief.

(d) *Incorporation by reference.* Briefs before the Commission or a presiding officer shall be completely self-contained and shall not incorporate by reference any portion of any other brief, pleading, or document.

(e) *Excerpts from the record.* Testimony and exhibits shall not be quoted or included in briefs except for short excerpts pertinent to the argument presented.

(f) *Filing and service.* Briefs shall be filed in the form and manner and served as required by §§ 3001.9 to 3001.12 of this part.

Appendix A to Subpart D of Part 3001—Pro Forma N-Case Procedural Schedule

Line	Action	Day number
1	Pre-Filing Consultations [1]	n/a.
2	Commission Order [2]	n/a.
3	Filing of Postal Service Request	0.
4	Commission Notice and Order [3]	1–3.
5	Technical Conference	10.
6	Participant Discovery on Postal Service Case Ends	28.
7	Responses to Participant Discovery on Postal Service Case..	35.
8	Participants Confirm Intent to File a Rebuttal Case	37 [4].
9	Filing of Rebuttal Cases (if submitted)	42.
10	Deadline for Motions for Leave to File Surrebuttal	44 [5].
11	Deadline for Answers to Motions for Surrebuttal	46.
12	Filing of Surrebuttal Cases (if authorized)	49 [6].
13	Hearings	
	Hearings (with no Rebuttal Cases)	42–44.
	Hearings (with Rebuttal Cases, but no requests for leave to file Surrebuttal Cases)	49–51.
	Hearings (with Rebuttal Cases and requests for leave to file Surrebuttal Cases)	54–56.
14	Initial Briefs	(7 days after conclusion of hearings).
15	Reply Briefs	(7 days after filing of Initial Briefs).
16	Target Issuance Date of Advisory Opinion	90.

[1] The Postal Service would initiate pre-filing consultations and would file a notice with the Commission of such consultations prior to their commencement.
[2] This order would appoint a Public Representative.
[3] This notice and order would announce the Postal Service request, set a deadline for interventions, set a date for a technical conference, and establish a procedural schedule.
[4] If no participant elects to file a rebuttal case, hearings begin on Day 42.
[5] If no surrebuttal cases are requested, hearings begin on Day 49.
[6] If one or more surrebuttal cases are requested (whether or not authorized by the Commission), hearings begin on Day 54.

By the Commission.

Ruth Ann Abrams,

Acting Secretary.

[FR Doc. 2013–13502 Filed 6–13–13; 8:45 am]

BILLING CODE P

POSTAL REGULATORY COMMISSION

39 CFR Parts 3030, 3032, and 3033

[Docket No. RM2013–4; Order No. 1739]

Unfair Competitive Advantages; Enhancement of the Formal Complaint Process

AGENCY: Postal Regulatory Commission.

ACTION: Notice of proposed rulemaking.

SUMMARY: The Commission is proposing rules to enhance the formal complaint process in cases involving alleged violations of a law that prohibits the Postal Service from taking certain actions that might provide it with unfair competitive advantages. The proposal provides an optional accelerated procedure that allows for adjudication of this type of complaint within 90 days. The Commission invites public comment on the proposal.

DATES: *Comments are due:* July 29, 2013. *Reply comments are due:* August 28, 2013.

ADDRESSES: Submit comments electronically via the Commission's Filing Online system at *http://www.prc.gov.* Those who cannot submit comments electronically should contact the person identified in the **FOR FURTHER INFORMATION CONTACT** section by telephone for advice on filing alternatives.

FOR FURTHER INFORMATION CONTACT: Stephen L. Sharfman, General Counsel, at 202–789–6820.

SUPPLEMENTARY INFORMATION:

I. Introduction
II. Substantive Provisions
III. Procedural Provisions
IV. Section-by-Section Analysis
V. Public Representative
VI. Ordering Paragraphs

I. Introduction

The Commission is proposing rules to govern complaints alleging violations of 39 U.S.C. 404a. Section 404a(a) precludes the Postal Service from: (1) Establishing regulations that have the effect of harming competition; (2) compelling private entities to disclose information about their intellectual property; and (3) using information obtained from a person without their consent and then offering any postal product that uses or is based on such information.

Persons believing that the Postal Service is not complying with the section 404a(a) restrictions may file a complaint with the Commission. 39 U.S.C. 3662(a). The Commission's current complaint procedures are found in 39 CFR part 3030. These proposed rules would supplement the current complaint procedures and work in conjunction with the current rules. Proposed part 3032 would create substantive rules that implement the statutory prohibitions found in 39 U.S.C. 404a. It would enhance the discovery process by allowing complainants to utilize depositions.

Part 3033 proposes to create an optional accelerated procedure designed to have the Commission adjudicate certain types of 39 U.S.C. 404a complaints in 90 days. The Commission is concerned that, at least for some businesses, Postal Service violations of section 404a—whether through abuse of its governmental regulatory authority, improperly requiring parties to divulge intellectual property, or inappropriately obtaining information—could cause irreparable harm and threaten the livelihood of certain companies or individuals. Prolonged litigation might not be financially viable even if the complainant were to ultimately succeed. This would leave such parties without effective recourse and frustrate the purpose of section 404a. These proposed rules address this concern by providing a mechanism for prompt complaint resolution. This should benefit both the complainant and the Postal Service because prompt resolution will avoid the uncertainty and lack of finality that occurs in a long, drawn out, formal trial-type proceeding. The proposed rules afford parties raising claims that the Postal Service violated 39 U.S.C. 404a with an alternative to more prolonged litigation.

Below, the Commission discusses the proposed rules with respect to complaints alleging violations of 39 U.S.C. 404a. Part II presents a more thorough discussion and foundation for the issues raised in this docket by the Commission's proposed substantive rules found in proposed part 3032. Part III discusses the foundations and major issues of the Commission's proposed procedural rules found in proposed part 3033 and the procedural deposition rule of part 3032. Part IV provides a section-by-section analysis of each proposed new rule. The proposed rules are set forth at the end of this Notice.

Comments by interested persons are due no later than 45 days from the date of publication in the **Federal Register**. Reply comments are due no later than 75 days from the date of publication in the **Federal Register**.

II. Substantive Provisions

In this part, the Commission explains the derivation of the substantive provisions of its proposed 39 U.S.C. 404a rules. It begins with the text of the statute. Unless otherwise expressly authorized by law, 39 U.S.C. 404a prohibits the Postal Service from taking the following actions:

- Establish[ing] any rule or regulation (including any standard) the effect of which is to preclude competition or establish the terms of competition unless the Postal Service demonstrates that the regulation does not create an unfair competitive advantage for itself or any entity funded (in whole or in part) by the Postal Service;
- Compel[ling] the disclosure, transfer, or licensing of intellectual property to any third party (such as patents, copyrights, trademarks, trade secrets, and proprietary information); or
- Obtain[ing] information from a person that provides (or seeks to provide) any product, and then offer any postal service that uses or is based in whole or in part on such information, without the consent of the person providing that information, unless substantially the same information is obtained (or obtainable) from an independent source or is otherwise obtained (or obtainable).

39 U.S.C. 404a(a). The Commission then explores the policy considerations of section 404a. Taking these policies into account, the Commission explains its proposed substantive 39 U.S.C. 404a regulations found in proposed part 3032.

A. Policy Guidance

In evaluating the major policy objectives for implementing the substantive provisions of 39 U.S.C. 404a, the Commission considers the relevant legislative history of the Postal Accountability and Enhancement Act (PAEA), Public Law 109–435, 120 Stat. 3218 (2006) and its precursor bills.

Section 404a was enacted as part of the PAEA. The PAEA is not accompanied by any conference reports or committee reports. However, several precursor bills contain a provision identical to that which was ultimately enacted as 39 U.S.C. 404a. Those precursor bills were explained in two Congressional Reports from the 108th and 109th Congresses—a Senate Committee Report and a House Committee Report.

The Senate Committee on Government Affairs issued a written report on S. 2468, a precursor bill to the PAEA, during the 108th Congress. *See* Senate Report 108–318 (August 25, 2004).[1] With respect to proposed 39 U.S.C. 404a, that committee report noted:

> The new section 404[a] prohibits the Postal Service from: (1) Establishing rules or regulations which preclude competition or give the Postal Service an unfair competitive advantage; (2) compelling disclosure, transfer, or licensing of intellectual property; or (3) offering any product or service that makes use of information obtained from a person that provides or seeks to provide a product to the Postal Service unless the person has consented to such use or the information can be obtained from another source. The Regulatory Commission is required to prescribe regulations to carry out the purposes of this section, and the prohibitions will be enforced through the Commission's strengthened complaint process and remedies, which include ordering rescission of any regulation.

Senate Report 108–318 (August 25, 2004) at 51. The Senate Committee Report also proclaimed that:

> S. 2468 contains a number of provisions the Committee believes are necessary to ensure that the Postal Service competes fairly with the private sector, particularly when offering products and services classified as competitive. The Postal Service, in our view, plays an important role in offering competitive products, even though a number of private sector businesses provide alternative services. We also believe, however, that steps need to be taken to level the playing field between the Postal Service and its competitors in the competitive product market. This is especially important now that this legislation gives the Postal Service significant new commercial flexibilities, particularly in the area of pricing. *The language in Title IV ensures that the benefits the Postal Service gets by virtue of its status as a government entity do not give it an opportunity to abuse its new commercial freedom.*

Id. at 27 (emphasis added). The Senate Report makes clear that ''the Postal Service is barred from using its rulemaking authority to put itself at a competitive advantage or put another party at a competitive disadvantage.'' *Id.* at 28.

[1] *See also* Postal Accountability and Enhancement Act, S. 2468, 108th Congress (2004) (as reported by S. Comm. on Gov't Affairs, August 25, 2004).

In addition to the earlier Senate Committee Report, the House of Representatives issued a House Committee Report explaining a precursor House bill to the PAEA.[2] This precursor House bill contained a provision identical to that ultimately enacted later in the same Congress within the PAEA as 39 U.S.C. 404a. The related House Committee Report contained almost identical language to the earlier Senate Report cited above with respect to its explanation of the provision. Moreover, the Report states that ''unlike the unconstrained pricing flexibility recommended by the President's Commission for competitive products, the bill imposes limited but important controls to protect the public interest from unfair competition.'' House Report 109–66, Part I (April 28, 2005) at 43. The House Committee Report explains that ''[u]nder the legislation, the Postal Service will compete on a level playing field, under many of the same terms and conditions as faced by its private sector competitors, albeit with stronger controls, oversight, and limitations in recognition of its governmental status.'' *Id.* at 44.

These Committee reports demonstrate that the enactment of 39 U.S.C. 404a sought to create a level playing field between the Postal Service and its competitors. There was a concern that without the prohibitions in 39 U.S.C. 404a the Postal Service may use its authority as an arm of the government to create an unfair competitive advantage for itself in areas where it competes with private enterprises. Accordingly, these proposed rules are designed to prohibit the Postal Service from unfairly using its status as a governmental entity to provide itself or third parties with a competitive advantage.

B. Proposed Substantive 39 U.S.C. 404a Regulations

With these policy considerations and unfair competition principles in mind, the Commission turns to the substantive provisions of its proposed rules related to 39 U.S.C. 404a in proposed part 3032.

1. 39 U.S.C. 404a(a)(1)

In drafting proposed part 3032, the Commission reviewed other federal agencies' regulations for resolving analogous complaints. The Commission found the Federal Communications Commission's (FCC) complaint regulations on program access rules to be instructive and informative with respect to its responsibilities under 39 U.S.C. 404a(a)(1). *See* 47 U.S.C. 548(b); 47 CFR 76.1001–02.

Similar to 39 U.S.C. 404a(a)(1), Public Law 102–385 (October 8, 1992), the Cable Television Consumer Protection and Competition Act of 1992 has a program access provision that declared it unlawful for certain communications vendors to ''engage in unfair methods of competition or unfair or deceptive acts or practices, the purpose or effect of which is to hinder significantly or prevent'' the distribution of certain programming. 47 U.S.C. 578(b). The FCC's program access rules are intended, among other things, to promote competition in the video distribution market by limiting the ability of vertically integrated cable companies and common carriers to withhold satellite programming from competitors in the distribution market. *Cablevision Systems Corp.* v. *Federal Communications Commission,* 649 F.3d 695, 699 (D.C. Cir. 2011); *see also* 47 CFR 76.1004. Parties may file a complaint with the FCC to enforce these regulations. 47 U.S.C. 548(c)(1); 47 CFR 76.1003.[3]

The Commission's proposed rules in part 3032 draw upon similarities to the FCC's statutory mandate and regulations regarding program access where appropriate. In drafting proposed part 3032, the Commission's proposed regulations seek to assign the burden of proof and burden of persuasion as set forth in each provision of 39 U.S.C. 404a.

The Commission notes that to succeed on a claim under 39 U.S.C. 404a(a)(1), the complainant must demonstrate that Postal Service action or inaction ''precludes competition,'' or ''establish[es] the terms of competition.'' Similarly, to successfully mount an affirmative defense under 39 U.S.C. 404a(a)(1), the statute requires the Postal Service to show that its action or inaction ''does not create an unfair competitive advantage.'' In its application, the Commission anticipates, as a matter of policy, drawing upon the similarities between these provisions in 39 U.S.C. 404a(a)(1) and precedent developed under federal statutes concerning unfair methods of competition.[4]

Federal unfair competition claims are reviewed in two separate ways: Under a ''rule of reason'' analysis, or a ''*per se*'' analysis.[5] Most commonly, claims of unfair competition are reviewed under the rule of reason analysis. This analysis focuses on whether the behavior unreasonably restrains competition. In making such a determination, the decision maker reviews the ''anticompetitive effects'' of the action. These anticompetitive effects must ''harm the competitive process and thereby harm consumers. . . . [H]arm to one or more competitors will not suffice.''[6] Just as in 39 U.S.C. 404a(a)(1) cases where the burden is on the complainant to show that the conduct ''precludes competition,'' or ''establish[es] the terms of competition,'' in federal unfair competition cases, the burden is on the plaintiff to demonstrate that the conduct has the requisite anticompetitive effect. *Id.*[7] If such a showing is made, the defendant ''may proffer a 'procompetitive justification' for its conduct.''[8] Similarly, under 39 U.S.C. 404a(a)(1) cases, the Postal Service must show that its conduct ''does not create an unfair competitive advantage.''

In unfair methods of competition cases, the procompetitive justification must be ''a nonpretextual claim that its conduct is indeed a form of competition on the merits because it involves, for example, greater efficiency or enhanced consumer appeal—then the burden shifts back to the plaintiff to rebut that claim.''[9] If the defendant's procompetitive justification stands unrebutted, then the ''plaintiff must demonstrate that the anticompetitive harm of the conduct outweighs the procompetitive benefit.'' *Id.*

Application of analogous precedent concerning claims of unfair competition will serve as useful guidance in adjudicating claims under 39 U.S.C. 404a(a)(1).

Proposed rule 3032.5 also clarifies that 404a(a)(1)'s use of the phrase ''rule or regulation (including any standard)'' includes other documents or policies

[2] *See* House Report 109–66, Part I (April 28, 2005); *see also* Postal Accountability and Enhancement Act, H.R. 22, 109th Congress (2005) (as reported by H. Comm. on Gov't Reform, April 28, 2005).

[3] For example, in 2008, AT&T Services, Inc. (AT&T) filed an FCC program access complaint alleging that Cox Enterprises (Cox) violated the program access rules by failing to provide AT&T with access to live coverage of San Diego Padres baseball games. *See AT&T Services, Inc.* v. *Cox, FCC Program Access Complaint,* FCC Docket No. CSR–8066–P, September 11, 2008.

[4] *See, e.g.,*15 U.S.C. 45 (prohibiting ''unfair methods of competition'').

[5] The *per se* analysis does not allow potential positive effects on competition to be considered as a defense to the alleged anticompetitive behavior.

[6] *United States* v. *Microsoft Corp.,* 253 F.3d 58 (D.C. Cir. 2001).

[7] *See generally Brooke Group, Ltd.* v. *Brown & Williamson Tobacco Corp.,* 509 U.S. 209 (1993) at 225–26.

[8] *Microsoft,* 253 F. 3d at 59 (D.C. Cir. 2001); *Eastman Kodak Company* v. *Image Technical Services, Inc.,* 504 U.S. 451 (1992) at 483.

[9] *Microsoft,* 253 F. 3d at 59 (D.C. Cir. 2001).

issued by the Postal Service when it is acting as a governmental entity. Such a reading is suggested, as a matter of policy, by the legislative history in the precursor bills which clarifies that 39 U.S.C. 404a was enacted, in part, to keep the Postal Service from improperly using its governmental authority to stifle competition. Additionally, using the catch-all provision of ''other document or policies'' ensures that form is not elevated over substance. It would be inappropriate for the Postal Service to be able to avoid violations of 39 U.S.C. 404a by merely titling its governmental policies as ''manuals'' or ''operating procedures'' as opposed to ''regulations'' or ''standards.''

2. 39 U.S.C. 404a(a)(2)

In drafting the implementing regulation for 39 U.S.C. 404a(a)(2), the Commission attempts to ensure, by regulation, that parties attempting to do business or otherwise interact with the Postal Service will not be coerced into divulging their intellectual property to third parties. The proposed implementing regulation for 39 U.S.C. 404a(a)(2) ensures that parties' interactions with the Postal Service are shielded from third-party threats to their intellectual property. Third parties will be unable to use the Postal Service as a vehicle for obtaining their competitors' or potential competitors' intellectual property.

3. 39 U.S.C. 404a(a)(3)

In drafting the implementing regulation for 39 U.S.C. 404a(a)(3), the Commission attempts to ensure, by regulation, that the Postal Service may not use information obtained from a party to offer a postal service based on such information without the party's consent. The party's consent must be informed. As an exception to this prohibition, the Postal Service may show that it has obtained substantially the same information from an independent source.

III. Procedural Provisions

In this part, the Commission explains the derivation of the procedural provisions of its proposed 39 U.S.C. 404a rules. First, the Commission considers the relevant policy guidance that has shaped the proposed 39 U.S.C. 404a procedural regulations. Second, the Commission discusses the overall structure of these proposed procedural regulations.

A. Policy Guidance

In determining how to give effect, procedurally, to the provisions of 39 U.S.C. 404a, the Commission draws upon its experience and that of other agencies tasked with similar responsibilities. The Commission also takes note of a recent executive order regarding agency regulations. Executive Order No. 13563, entitled ''Improving Regulation and Regulatory Review,'' requests that agencies review their regulations and consider how best to ''modify, streamline, expand or repeal them in accordance with what has been learned.'' E.O. 13563 at section 6 (January 18, 2011).[10] In connection with that guidance, the Commission, as part of this rulemaking, considers how to streamline its complaint rules relating to section 404a complaints.

The Commission's initial PAEA complaint rules contemplate two types of complaints—those relating to broad postal policy matters and complaints relating to operational or service issues. *See* Docket No. RM2008–3, Order No. 101, Notice and Order of Proposed Rulemaking Establishing Rules for Complaints, August 21, 2008, at 6–9. Since the passage of the PAEA and the implementation of the Commission's PAEA complaint rules, the Commission has conducted one major complaint proceeding that raised issues relating to unfair competition: Docket No. C2009–1, GameFly Inc. (GameFly). Although the GameFly complaint did not directly raise issues related to 39 U.S.C. 404a, without changes to the Commission's procedural complaint rules, section 404a complaints would be adjudicated in a similar manner because they raise unfair competition issues. The Commission's experience with the GameFly complaint and others has provided valuable insight into identifying potential ways to accelerate resolution of complaints while still providing appropriate due process. Accordingly, the Commission proposes special procedural rules to provide for prompt, streamlined adjudication of section 404a complaints.

With respect to other agencies' experiences, the Commission notes that in the Telecommunications Act of 1996, Congress mandated that the FCC ''expedite the processing of formal complaints,'' including those similar to the Commission's section 404a complaints.[11] In response, the FCC adopted streamlined complaint procedures to provide a forum for prompt resolution of complaints. *Id.* at 1–2. Drawing upon that experience, the Commission proposes accelerated complaint procedures based in part on the FCC's revised formal complaint procedures. The Commission finds that many of the FCC's revised complaint procedures can be used by the Commission to accelerate 39 U.S.C. 404a complaints, while still preserving due process.

B. Proposed Procedural 39 U.S.C. 404a Regulations

These proposed section 404a procedural rules are designed to work in conjunction with the Commission's general complaint rules currently found in 39 CFR Part 3030. They complement existing rules, but are tailored to the specific circumstances raised by section 404a. These complaint procedures are well suited to the circumstances of complaints alleging violations of the prohibited actions specified in section 404a.

As noted, the Commission is concerned that, at least for some businesses, Postal Service violations of section 404a could cause irreparable harm and threaten the livelihood of certain companies or individuals. These proposed rules address these concerns by providing a mechanism for prompt complaint resolution. Moreover, for the vast majority of issues expected to arise under 39 U.S.C. 404a, complainants should have the information and documentation needed to support their claims well in advance of filing a complaint.

1. Special Accelerated Procedures

The proposed regulations implementing 39 U.S.C. 404a include regulations allowing for optional accelerated procedures for complaints alleging violations of 39 U.S.C. 404a. Under these accelerated procedures, a complainant can opt to have the Commission decide the case on the basis of only a complaint and answer, and in limited circumstances, a reply. As part of each pleading, participants are to file a complete statement of facts that set forth and support the facts demonstrating violation of 39 U.S.C. 404a. The accelerated procedural rules also contemplate allowing interested parties who could be directly impacted by a decision on the issues raised by the complaint, to intervene and argue their cases in a similar manner.

[10] E.O. 13563 does not directly apply to the Postal Regulatory Commission. E.O. 13563 section 7(a). Nonetheless, the Office of Management and Budget has stated that independent agencies, such as the Commission, ''are encouraged to give consideration to all of its provisions, consistent with their legal authority.'' Memorandum M–11–10 from Office of Management and Budget entitled ''Executive Order 13563, Improving Regulation and Regulatory Review'' at 6 (February 2, 2011).

[11] Amendment of Rules Governing Procedures to be Followed When Formal Complaints are Filed Against Common Carriers, 12 F.C.C.R. 22497 (November 25, 1997).

In essence, these requirements are designed to elicit, as expeditiously as possible, all the information necessary for the Commission to make a determination as to whether the complaint is justified under section 3662(c). These proposed rules are an attempt to accelerate the adjudicatory process to the maximum extent feasible consistent with due process. As proposed, the rules allow the participants to fully develop their theories of the case, applicable legal requirements, and the facts while still permitting the Commission to respond rapidly to the issues raised by the complainant.

Under these procedures, it is the Commission's intention to issue a final decision on the merits of a complaint filed using these accelerated procedures prior to the deadline in 39 U.S.C. 3662(b)(1) for making a finding that the complaint raises a material issue of fact or law; that is, within 90 days of the date the complaint is filed. As a result, if adopted as final rules, the Commission must strictly enforce all deadlines as set forth in the proposed rules. Failure to adhere to such deadlines may result in adverse action. The Commission's strong commitment to prompt resolution of accelerated complaints and their effective foreclosure of avenues for delaying litigation may foster and even encourage settlement or informal resolution of disputes.

The proposed accelerated complaint and pleadings procedures require the participants to produce at the outset of the case all the material and evidence on which they seek to rely. This ensures that litigation delay tactics will be avoided and the Commission can promptly issue a decision. The use of these accelerated procedures is also expected to significantly decrease litigation costs due to the absence of a prolonged formal discovery process and hearing.

The Commission does not anticipate the absence of discovery under these accelerated procedures to appreciably affect the complainant's ability to make a compelling case on the merits. For the vast majority of issues expected to arise under 39 U.S.C. 404a, complainants should have the information and documentation needed to support their claims well in advance of filing a complaint. For example, for complaints arising under section 404a(a)(1), the complainant should be in possession of the information and documents necessary to show how a Postal Service rule or regulation is causing competitive harm in the marketplace. Discovery from the Postal Service would not be expected to appreciably help the complainant demonstrate how the Postal Service's action causes competitive harm. The complainant is in the best position to directly establish such harm by reference to the effects the questionable rule or regulation has or will have on his or her business or other activities.

Notwithstanding these substantial benefits, the Commission recognizes that the proposed accelerated procedures place additional burdens and due process limitations compared to those traditionally afforded to complainants under 39 CFR Part 3030. In particular, these accelerated procedures will require both the Postal Service and the complainant to present their cases for adjudication without discovery and under compressed time frames. They may also require participants to expend additional resources to meet the condensed schedules. These burdens are not insignificant.

On balance, however, the Commission's initial analysis is that the additional burdens on the participants for complaints filed under the proposed accelerated procedures, while real, are justified and outweighed by the significant benefits of bringing the important issues raised in section 404a complaints to a prompt, potentially less costly resolution.

This initial analysis could change, however, if for example, other meaningful benefits or burdens are identified. Consequently, the Commission is especially interested in commenters' views on its identification and balancing of the proposed benefits and burdens of these accelerated procedures. It would be helpful for commenters to address these topics in their submissions.

It is important to highlight the fact that these accelerated 404a complaint procedures are proposed to be voluntary at the election of the complainant. This ensures that the complainant will have the option of either utilizing the accelerated complaint procedures or the typical complaint procedures. The Commission recognizes that some section 404a complainants may prefer the more thorough discovery process and Commission review that results from the Commission's traditional complaint procedures. Such actions may be preferable in those circumstances where the Postal Service is in possession of much of the information and documents necessary for a complainant to prove violations of 39 U.S.C. 404a. In such circumstances, the Commission's traditional complaint procedures, including their discovery options, may be better equipped to allow complainants to make their case before the Commission. The complainant will be in a good position to know whether the issues raised by the complaint are best suited for these proposed accelerated procedures or the traditional complaint procedures found in 39 CFR Part 3030.

Given these possibilities, the Commission does not believe it is prudent, at the current time, to foreclose the traditional complaint route option for complaints raising issues under 39 U.S.C. 404a.

2. Depositions in Non-Accelerated Section 404a Complaints

In order to streamline the discovery process for section 404a complaints that are not filed under the proposed accelerated procedures, the Commission is also proposing to allow depositions during the discovery phase of the complaint. Because section 404a complaints are expected to involve a limited number of participants, they would appear to be particularly well-suited for depositions. Depositions should allow participants to exchange information in a more efficient manner than the interrogatory procedures typical of the Commission's general rules of practice and procedure. Whereas, responses to interrogatories ordinarily take weeks, responses to questioning during depositions will result in immediate responses and allow for immediate follow up. This procedure should streamline Commission review by allowing participants to promptly narrow the issues for Commission review and decision.

The Commission recognizes that depositions can prove to be costly. As such, the Commission's proposal is not to make depositions mandatory, but rather to allow an expanded opportunity for participants to engage in depositions in order to facilitate the exchange of information.

IV. Section-by-Section Analysis

In this part, the Commission reviews the proposed rules, describing what each rule is designed to accomplish. The purpose of this section-by-section analysis is to assist commenters in determining the nature of each proposed regulation and the rationale behind it. Each proposed section is discussed below.

Section 3030.1 Applicability. The proposed changes to this section are designed to tie together the Commission's current complaint rules with proposed new parts 3032 and 3033

with respect to complaints filed under 39 U.S.C. 404a.

Section 3032.1 Applicability. This proposed rule identifies the types of complaints that the Commission will review under part 3032. In particular, it states that only complaints alleging violations of 39 U.S.C. 404a will be subject to the requirements of part 3032. Additionally, the rule recognizes that such complaints may be heard under the Commission's traditional procedural complaint rules in part 3030 or the Commission's new proposed accelerated complaint procedures of part 3033. Subsection (b) makes clear that the rules under part 3032 apply to only those portions of a complaint alleging violations of section 404a. Any remaining counts and complaint allegations will be reviewed under other applicable statutory and regulatory standards apart from part 3032.

Section 3032.5 Unfair competition. This proposed rule sets forth the requirements for the Commission to find a complaint alleging a violation of 39 U.S.C. 404a(a)(1) to be justified. It also sets forth the requirements for the Postal Service's statutory affirmative defense. This section defines the term ''rule or regulation (including any standard)'' as used in the statute to include documents or policies issued by the Postal Service exercising its regulatory authority or otherwise acting as a governmental entity, as opposed to acting solely as a competitor or market participant. This reflects legislative history that Congress intended for section 404a(a)(1) to, in part, place a check on the Postal Service and keep it from using its authority as a regulator or governmental entity to harm the marketplace. *See* Senate Report 108–318 (''The language in Title IV ensures that the benefits the Postal Service gets by virtue of its status as a government entity do not give it an opportunity to abuse its new commercial freedom.''); Senate Report 108–318 (''[T]he Postal Service is barred from using its rulemaking authority to put itself at a competitive advantage or put another party at a competitive disadvantage.''); House Report 109–66 (''Under the legislation, the Postal Service will compete on a level playing field, under many of the same terms and conditions as faced by its private sector competitors, albeit with stronger controls, oversight, and limitations in recognition of its governmental status.'').

Section 3032.6 Disclosure, transfer, and licensing of intellectual property. This proposed rule sets forth the requirements for the Commission to find a complaint alleging a violation of 39 U.S.C. 404a(a)(2) to be justified. This section defines the term ''disclosure, transfer, or licensing of intellectual property'' to include actions that have adverse effects on the value of intellectual property. This prevents form from being elevated over substance and ensures that the Commission can remedy a violation of 39 U.S.C. 404a(a)(2) regardless of the means used to compel a party to provide its intellectual property to a third party.

Section 3032.7 Unlawfully obtaining information. This proposed rule sets forth the requirements for the Commission to find a complaint alleging a violation of 39 U.S.C. 404a(a)(3) to be justified. It also sets forth the requirements for the Postal Service's statutory affirmative defenses. The section contains a provision establishing that the statutory affirmative defense of ''consent'' requires more than just a signature on a form that a party must sign before talking to the Postal Service. The consent must be informed and uncoerced. In determining whether consent is informed and uncoerced, the Commission draws upon the experience of the D.C. Bar Rule of Professional Conduct 1.0 and its associated comments.

The communication necessary to obtain consent will vary according to the circumstances. The Postal Service must make reasonable efforts to ensure that the party giving consent possesses information reasonably adequate to make an informed decision. Ordinarily, this will require communication that includes an explanation reasonably necessary to inform a party of their legal rights and obligations of the proposed course of conduct, and a discussion of the options and alternatives. In determining whether the information and explanation provided are reasonably adequate, relevant factors include the party's experience in legal matters generally and in making decisions of the type involved, and whether the party is independently represented by counsel in giving the consent. In all circumstances, the consent must be not only informed, but also uncoerced by the Postal Service or anyone working on the Postal Service's behalf.

Section 3032.8 Statutorily authorized affirmative defense. This proposed rule sets forth the Postal Service's statutory affirmative defense that its violations of 39 U.S.C. 404a are justified because those actions are specifically authorized by law. This affirmative defense may be used with respect to alleged violations of either 39 U.S.C. 404a(a)(1), (2), or (3). However, the Postal Service's statutory general and specific powers under 39 U.S.C. 401 and 404 are subject to the prohibitions of 39 U.S.C. 404a. *See* 39 U.S.C. 401 (''Subject to the provisions of section 404a, the Postal Service shall have the following general powers.''); 39 U.S.C. 404 (''Subject to the provisions of section 404a . . . the Postal Service shall have the following powers.''). Such statutory provisions provide that the Postal Service may not base any statutory affirmative defenses to alleged violations of 39 U.S.C. 404a(a) on the powers enumerated in 39 U.S.C. 401 and 404. However, this section does not preclude the Postal Service from arguing that a particular Postal Service regulation or other action (or inaction) does not have the requisite effect to violate 39 U.S.C. 404a(a).

Section 3032.15 Depositions in non-accelerated section 404a complaint proceedings. This proposed rule allows for the taking of depositions, in accordance with the Federal Rules of Civil Procedure, for section 404a complaints that are filed under the Commission's traditional complaint rules in part 3030. This rule is inapplicable until the Commission initiates a proceeding on the complaint, *i.e.,* until the Commission finds that the complaint raises a material issue of fact or law. Without such a provision, the deposition process might be abused. This ensures that only complainants raising material issues of fact or law will subject the Postal Service to the time and expense of the discovery process. The Commission anticipates that allowing depositions will expedite the discovery process since responses to oral questions posed during depositions allow for immediate follow up. This is in contrast to the Commission's typical discovery process which does not result in responses for 2 weeks and often involves follow up. *See* 39 CFR 3001.26. In proposing to adopt the deposition standard found in Federal Rule of Civil Procedure 30, the Commission anticipates that the deposition process should prove to be more like those routinely taken during proceedings in federal court rather than those taken in Docket No. C2008–3 pursuant to Commission rule 3001.33. Additionally, since section 404a complaints are expected to involve a limited number of participants, they would appear to be particularly well-suited for depositions. Logistically, depositions are more manageable when there are fewer participants conducting them.

Section 3033.1 Applicability. This proposed rule makes clear that the choice to use the accelerated procedures of part 3033 exclusively rests with the complainant. It also states the types of

complaints eligible for the accelerated procedures of part 3033—those alleging violations of 39 U.S.C. 404a or associated regulatory requirements. Paragraph (b) ensures that a complaint filed under part 3033 may only make claims arising under 39 U.S.C. 404a or associated regulatory requirements. Complaints arising under the same set of facts raising claims alleging violations of multiple statutory or regulatory requirements found in 39 U.S.C. 3662(a)—in addition to those related to 39 U.S.C. 404a—must be filed under part 3030.[12] This eliminates the possibility of requiring the Postal Service to litigate two complaints (one accelerated and one non-accelerated) arising out of the same set of facts. It avoids the potential unfairness that would result if the Postal Service had to effectively divulge its litigation strategy at an early stage of a non-accelerated complaint through its filings in a related accelerated proceeding.

Paragraph (c) ensures that complaints filed under part 3033 are adjudicated under these rules. A complainant may not file a complaint under part 3033, withdraw the complaint, and then re-file it under 3030. This eliminates the potential unfairness that would result if the Postal Service had to file its entire case in the expedited form and manner identified in part 3033 only to then have to relitigate the case under the rules of part 3030. Once a complaint is filed under part 3033, it either must be settled or decided by the Commission. However, if a complaint filed pursuant to part 3033 is dismissed without prejudice on procedural grounds pursuant to a motion to dismiss; such a complaint may be refiled under either part 3030 or part 3033. The legal doctrines of *res judicata* and *collateral estoppel* shall apply. Paragraph (d) identifies the other Commission rules that are applicable to complaints filed under this part.

Paragraph (e) sets forth the standard the Commission will apply in reviewing motions filed under this part. The Commission recognizes that unanticipated extraordinary circumstances may arise and participants may need to request relief from certain aspects of the rules of this part, *e.g.,* a severe illness to a witness or counsel. In such circumstances, a motion requesting a brief extension would be reasonable. However, the speedy resolution of complaints envisioned by these rules will be exceedingly difficult if the general substance of these regulations is not followed. Participants must file their complete cases, including pleadings and supporting documentation in the manner, structure (complaint, answer, reply), and under the procedural schedule set forth in the rules. If alterations to the procedural schedule routinely occur, the prompt adjudication of section 404a complaint disputes as intended by these rules will be compromised. Accordingly, motions to excuse participants from conforming to the substance of these rules generally will be looked on with disfavor. Such motions will only be granted in exceptional circumstances.

Responses to motions filed pursuant to paragraph (e) will be due 3 days after the motion is filed. This shortened time is consistent with the expedited schedule established by these rules.

Section 3033.5 General pleading requirements for accelerated 404a complaints. This rule sets forth the filing requirements for pleadings filed under this part and states that a complaint filed under part 3033 will be decided based on the record consisting of the complaint, the answer, a reply (if applicable), intervenor submissions, and supporting documentation.

Section 3033.6 Complaint contents. This proposed rule identifies the information that must be included in a complaint filing in order to satisfy the ''form and manner'' requirements of 39 U.S.C. 3662(a) for complaints filed pursuant to part 3033. These requirements are based in large part upon the Commission's general complaint content requirements of part 3030 but are specifically tailored to ensure that the Commission has the information it needs to decide the complaint under the accelerated time frame envisioned by part 3033.

Section 3033.7 Answers. This proposed rule identifies the information that must be included in the Postal Service's answer for complaints filed pursuant to part 3033. These requirements are based in large part upon the Commission's general complaint answer requirements of part 3030, but are specifically tailored to ensure that the Commission has the information it needs to decide the complaint under the accelerated time frame envisioned by part 3033.

The proposed rule is designed to ensure that the Postal Service narrows the issues for Commission adjudication in its answer. The rule also specifically requests that the Postal Service address the complainant's proposed remedies and their potential effects on the Postal Service—both intended and unintended. This will ensure that, if necessary, the Commission has the information necessary to determine how to best achieve compliance with applicable requirements and remedy the effects of any noncompliance.

Section 3033.8 Pleadings filed in response to a complaint. This proposed rule governs the timeline for the Postal Service to respond to complaints. In general, the Postal Service has 20 days to respond to a complaint. If the Postal Service files an appropriate motion, the timeline for the Postal Service to file its answer to a complaint is altered in a manner similar to that in the Federal Rules of Civil Procedure. If the Postal Service does file such motion, this rule also governs the deadline for filing a response to such motion.

Section 3033.9 Replies to answers raising affirmative defenses. This rule sets forth the limited circumstances under which replies to answers are allowed, and the contents allowed in such replies. In particular, replies are only allowed when the Postal Service's answer raises affirmative defenses, which are required to be clearly identified in the Postal Service's answer pursuant to section 3033.7(a)(6). The statutory affirmative defenses found in 39 U.S.C. 404a are restated in the Commission's rules in proposed sections 3032.5, 3032.7, and 3032.8. Other potential affirmative defenses may exist, depending on the facts and circumstances of each case (*e.g.,* statute of limitations, fair use, *Noerr-Pennington* doctrine, etc.).

Section 3033.10 Complete statement of facts. This proposed rule sets forth requirements for the statement of facts, which needs to be included as part of the complaint, answer, and reply. The statement of facts must include all documents and testimony (through affidavits or declarations) that the filing participant is relying upon in order to prove its case. The information submitted under this rule is expected to form the evidentiary basis of the Commission's findings of fact in connection with complaint proceedings filed under part 3033. Paragraph (b) ensures that participants do not submit documents or information exchanged as part of settlement discussions as evidence.

Section 3033.11 Intervention. This rule governs the types of intervenors that are allowed to participate in complaint proceedings filed under part 3033. Due to the accelerated time frames and the need for prompt action, the Commission proposes to limit intervenors to those interested persons who can demonstrate that intervention is necessary to protect their interests

[12] Alternatively, complainants may have their 39 U.S.C. 404a claims heard under the accelerated procedures of part 3033 by waiving their other claims under other statutory or regulatory provisions.

and that they be directly impacted by a decision on the merits. Intervenors also may not expand the scope of the proceeding. This ensures that the Commission and the parties will not have to spend time and resources responding to intervenors that do not have a sufficient stake in the outcome of the proceeding or attempt to change its focus.

Under this proposed rule, motions to intervene along with all associated supporting documentation are due within 10 days of an answer being filed, in conjunction with the reply deadline (if applicable). The supporting documentation must include a complete statement of facts pursuant to section 3033.10 related to the issues raised and facts alleged by the potential intervenor. The complainant and the Postal Service then have 10 days to respond to the issues raised in the motion to intervene and the supporting documentation. Such responses must comply with the requirements for replies under section 3033.9 and may only address the issues raised in the motion to intervene and the supporting documentation. This will ensure that the Commission will be able to issue its decision on the complaint in a timely manner as requested in the accelerated complaint while still appropriately balancing the rights of potential intervenors to have their views and concerns considered.

Section 3033.12 Notice of Proceeding. This rule sets forth the information that the Commission will provide in its notice docketing the section 404a complaint proceeding filed pursuant to part 3033. Such notice will be published on the Commission's Web site.

Section 3033.15 Final order. Under this proposed rule, the Commission shall issue a final order on the complaint in 90 days. The rule ensures that if the Commission finds the complaint to be justified, it will grant appropriate relief in accordance with rule 3030.50. The final order will also rule on any motions for intervention filed pursuant to proposed rule 3033.10 that have not been previously ruled upon. Due to the strict time constraints, the Commission anticipates ruling on most intervention motions in the final order.

V. Public Representative

Pursuant to 39 U.S.C. 505, Sean C. Duffy is appointed to serve as an officer of the Commission (Public Representative) to represent the interests of the general public in the above-captioned docket.

VI. Ordering Paragraphs

It is ordered:

1. Docket No. RM2013–4 is established for the purpose of receiving comments of the Commission's proposed rules under 39 U.S.C. 404a.

2. The Commission proposes to amend its regulations as shown below the signature of the Secretary. The proposed amendments involve altering and adding a new subsection to rule 3030.1 and adding new parts 3032 and 3033.

3. Sean C. Duffy is designated as an officer of the Commission to represent the interests of the general public in this docket.

4. Interested persons may submit comments no later than 45 days from the date of publication in the **Federal Register**.

5. Interested persons may submit reply comments no later than 75 days from the date of publication in the **Federal Register**.

6. The Secretary shall arrange for publication of this order in the **Federal Register**.

List of Subjects

39 CFR Part 3030

Administrative practice and procedure; Postal Service.

39 CFR Part 3031

Administrative practice and procedure; Postal Service.

39 CFR Part 3032

Administrative practice and procedure; Postal Service, trademarks.

For the reasons stated above, the Postal Regulatory Commission proposes to amend 39 CFR chapter III as follows:

PART 3030—RULES FOR COMPLAINTS

■ 1. The authority citation for part 3030 continues to read as follows:

Authority: 39 U.S.C. 503; 3662.

■ 2. Revise § 3030.1 to read as follows:

§ 3030.1 Applicability.

(a) Except as provided in paragraph (c) of this section, the rules in this part govern the procedure for complaints filed under 39 U.S.C. 3662 that meet the form and manner requirements of subpart B of this part. Part 3001, subpart A of this chapter, applies unless otherwise stated in this part or otherwise ordered by the Commission.

(b) Sections 3001.25 through 3001.27 of this chapter and § 3001.33 of this chapter do not apply to this part unless and until the Commission makes a finding under § 3030(a)(1) that the complaint raises material issues of fact or law.

(c) If a complaint under 39 U.S.C. 3662 alleges a violation of 39 U.S.C. 404a, the person filing the complaint may choose to file such complaint under this part or under the accelerated procedures provided in part 3033 of this chapter. If the complaint is filed under this part, the special rules under part 3032 of this chapter shall apply to the complaint in addition to the rules under this part.

■ 3. Add part 3032 to read as follows:

PART 3032—SPECIAL RULES FOR COMPLAINTS ALLEGING VIOLATIONS OF 39 U.S.C. 404a

Subpart A—General

Sec.
3032.1 Applicability.

Subpart B—Requirements and Defenses

3032.5 Unfair competition.
3032.6 Disclosure, transfer, and licensing of intellectual property.
3032.7 Unlawfully obtaining information.
3032.8 Statutorily authorized affirmative defense.

Subpart C—Special Procedural Rules for 39 U.S.C. 404a Complaints

3032.15 Depositions in non-accelerated 39 U.S.C. 404a complaint proceedings.

Authority: 39 U.S.C. 404a, 3662.

Subpart A—General

§ 3032.1 Applicability.

(a) The rules in this part govern proceedings filed under 39 U.S.C. 3662 alleging violations of 39 U.S.C. 404a that meet the requirements of:

(1) Sections 3030.2 and 3030.10 of this chapter; or

(2) Sections 3033.5 and 3033.6 of this chapter.

(b) If a complaint alleges violations of multiple legal or regulatory requirements, the rules in this part apply only to those claims of a complaint alleging violations of 39 U.S.C. 404a and associated regulatory requirements.

(c) Subpart B of this part applies to complaints adjudicated under part 3030 of this chapter and part 3033 of this chapter. Subpart C of this part applies only to complaints adjudicated under part 3030 of this chapter.

Subpart B—Requirements and Defenses

§ 3032.5 Unfair competition.

(a) A complaint alleging a violation of 39 U.S.C. 404a(a)(1) must show that:

(1) A Postal Service rule, regulation, or standard has the effect of:

(i) Precluding competition; or

(ii) Establishing the terms of competition; and

(2) The rule, regulation, or standard harms or harmed the person filing the complaint and competition.

(b) As an affirmative defense to a complaint under 39 U.S.C. 404a(a)(1), the Postal Service may demonstrate that the rule, regulation, or standard at issue does not create an unfair competitive advantage for itself or any entity funded, in whole or in part, by the Postal Service.

(c) As used in this section, the term ''rule, regulation, or standard'' includes, among other things, documents or policies issued by the Postal Service to exercise its regulatory authority or otherwise act as a governmental entity.

§ 3032.6 Disclosure, transfer, and licensing of intellectual property.

(a) A complaint alleging a violation of 39 U.S.C. 404a(a)(2) must show that the Postal Service has compelled or attempted to compel the disclosure, transfer, or licensing of the intellectual property of the person filing the complaint to a third party.

(b) As used in this section, the term ''intellectual property'' includes, among other things, patents, copyrights, trademarks, trade secrets, and proprietary information.

(c) As used in this section, the term ''disclosure, transfer, or licensing of intellectual property'' includes, among other things, an action that has an adverse effect on the value of intellectual property.

§ 3032.7 Unlawfully obtaining information.

(a) A complaint alleging a violation of 39 U.S.C. 404a(a)(3) must show that:

(1) The person filing the complaint has provided or sought to provide a product to the Postal Service;

(2) The Postal Service obtained information about such product from the person filing the complaint; and

(3) The Postal Service offers or offered a postal service that uses or is based, in whole or in part, on the information obtained from the person filing the complaint.

(b) As an affirmative defense to a complaint under 39 U.S.C. 404a(a)(3), the Postal Service may demonstrate that substantially the same information was obtained (or was obtainable) from an independent source or is otherwise obtained (or obtainable) through lawful means.

(c) As an affirmative defense to a complaint under 39 U.S.C. 404a(a)(3), the Postal Service may show that the information obtained was provided by consent. Such consent must be informed, uncoerced, and given only after the Postal Service has communicated adequate information and explanation about the risks of providing such consent.

§ 3032.8 Statutorily authorized affirmative defense.

(a) As an affirmative defense to an allegation of a violation of 39 U.S.C. 404a(a), the Postal Service may demonstrate that it is specifically authorized by law to take the action or inaction alleged to be a violation of that section.

(b) Authority under 39 U.S.C. 401 or 39 U.S.C. 404 may not form the basis of an affirmative defense under paragraph (a) of this section.

(c) Paragraph (b) of this section does not preclude the Postal Service from arguing that a particular Postal Service regulation or other action (or inaction) does not have the requisite effect to violate 39 U.S.C. 404a(a).

Subpart C—Special Procedural Rules for Section 404a Complaints

§ 3032.15 Depositions in non-accelerated Section 404a complaint. proceedings.

(a) If the complaint was filed under part 3030 of this chapter, participants may take depositions in accordance with Federal Rule of Civil Procedure 30. Participants may take depositions immediately after the Commission makes a finding under § 3030.30(a) of this chapter that the complaint raises material issues of fact or law.

(b) Section 3001.33 of this chapter does not apply to depositions under this section.

■ 4. Add part 3033 to read as follows:

PART 3033—ACCELERATED PROCEDURES FOR COMPLAINTS ALLEGING VIOLATIONS OF 39 U.S.C. 404a

Subpart A—General

Sec.
3033.1 Applicability.

Subpart B—Form and Manner Requirements for Pleadings in Accelerated Complaints

3033.5 General pleading requirements for accelerated section 404a complaints.
3033.6 Complaint contents.
3033.7 Answers.
3033.8 Pleadings filed in response to a complaint.
3033.9 Replies to answers raising affirmative defenses.
3033.10 Complete statement of facts.
3033.11 Intervention.
3033.12 Notice of proceeding.

Subpart C—Commission Determinations and Relief

3033.15 Final order.

Subpart A—General

§ 3033.1 Applicability.

(a) Any person filing a complaint under 39 U.S.C. 3662 alleging violations of 39 U.S.C. 404a and associated regulatory requirements may choose to have the complaint adjudicated under the accelerated procedures of this part. If the person does not choose to have the complaint adjudicated under the accelerated procedures of this part, the procedural requirements of part 3030 of this chapter will apply to the complaint.

(b) A complaint filed under this part may only make claims arising under 39 U.S.C. 404a and associated regulatory requirements. A complaint otherwise eligible for filing under this part containing additional claims raising one or more of the other statutory or regulatory provisions listed in 39 U.S.C. 3662(a) must be filed under part 3030 of this chapter if such additional claims arise out of the same set of facts.

(c) A complaint filed under this part may not be re-filed under part 3030 of this chapter unless:

(1) Withdrawn by the person filing the complaint prior to the Postal Service's answer to the complaint; or

(2) Dismissed without prejudice.

(d) Unless otherwise stated in this part or otherwise ordered by the Commission, §§ 3001.1, 3001.5 though 3001.15, 3001.21, 3001.23, 3001.32, 3030.2, 3030.11, 3030.20, 3030.21, 3030.40, 3030.41, and 3030.50 of this chapter apply to accelerated complaints filed under this part.

(e) Except as otherwise provided in this part, motion practice is limited to extraordinary circumstances. Motions requesting waiver from compliance with the substance of the rules of this part, including material modifications of the procedural schedule, will generally be disfavored and granted only in exceptional circumstances. Except as otherwise provided in this part, responses to motions are due within 3 days.

(f) The special rules under part 3032 of this chapter apply to each complaint filed under this part.

Subpart B—Form and Manner Requirements for Pleadings in Accelerated Complaints

§ 3033.5 General pleading requirements for accelerated 39 U.S.C. 404a complaints.

(a) A complaint filed under this part will be resolved on a written record consisting of a complaint and answer, along with all associated submissions. A reply to an answer is permissible only as set forth in § 3033.9. Intervenor filings and responses thereto are

permissible only as set forth in § 3033.11.

(b) Pleadings must be clear, concise, and explicit. All matters concerning a claim, defense or requested remedy, including damages, must be pleaded fully and with specificity.

(c) Pleadings must present facts which, if true, are sufficient to constitute a violation of the law, Commission regulation or order, or a defense to such alleged violation.

(d) Facts must be supported by relevant affidavit(s), declaration(s), or documentation.

(e) Legal arguments must be supported by appropriate statutory, judicial, Commission, or other administrative authority.

(f) If known, opposing authorities must be identified and distinguished.

(g) All authorities relied upon which are not routinely available in national reporting systems, such as unpublished decisions or slip opinions of courts or administrative agencies, must be included as part of filings.

(h) Information submitted, as well as relevant legal authorities, must be current, accurate, and updated as necessary and in a timely manner at any time before a decision is rendered on the merits of the complaint.

(i) Rules, regulations, and standards that are referred to or relied upon in a complaint, answer, or other pleading shall be appended to such complaint, answer, or other pleading.

(j) Pleadings shall identify the name, address, telephone number, and email address of the filing attorney or, if a participant is not represented by an attorney, the filing participant.

§ 3033.6 Complaint contents.

(a) A complaint filed under this part shall contain:

(1) An affirmative statement that the person filing the complaint seeks relief under the accelerated procedures of this part;

(2) A full explanation of how the Postal Service's action or inaction violates applicable statutory standards under 39 U.S.C. 404a or related regulatory requirements, including citations to the relied upon section or sections of statute, regulation, order, or other regulatory requirements;

(3) A statement of the specific relief requested and the basis for that relief;

(4) Identification of persons or classes of persons known, or believed to be similarly affected by the issues involved in the complaint, if applicable;

(5) A complete statement of facts that conforms with § 3033.10 that establishes the violation(s) described in paragraph (a)(2) of this section;

(6) Proposed findings of fact, conclusions of law, and legal analysis relevant to the claims and arguments set forth in the complaint;

(7) A certification that prior to the filing, the person filing the complaint attempted to meet or confer with the Postal Service's General Counsel to resolve or settle the complaint, why the person filing the complaint believes additional such steps would be unsuccessful, and the reasons for that belief;

(8) A statement as to whether the issues presented are pending in or have been resolved by an existing Commission proceeding or a proceeding in any other forum; and if so, an explanation of why timely resolution cannot be achieved in that proceeding;

(9) All affidavits, declarations, documents, data and analysis upon which the person filing the complaint intends to rely to support the facts alleged in the complaint; and

(10) A certification that the complaint has been served on the Postal Service as required by § 3030.11 of this chapter.

(b) The Commission may waive any of the requirements listed in paragraph (a) of this section to serve the interests of justice.

§ 3033.7 Answers.

(a) The Postal Service's answer to a complaint filed under § 3033.6 shall contain:

(1) Sufficient information to advise the person filing the complaint and the Commission fully and completely of the nature of each defense;

(2) A full explanation of why the Postal Service's action or inaction does not violate applicable statutory standards under 39 U.S.C. 404a or related regulatory requirements, including citations to the relied upon section or sections of statute, regulation, order, or other regulatory requirements;

(3) If applicable, a full explanation of why the relief requested is inappropriate, including information on how granting the relief requested could have unintended consequences or cause harm to the Postal Service unrelated to the issues raised in the complaint;

(4) Specific responses to all material allegations of the complaint and a detailed statement of the basis for such responses;

(5) A complete statement of facts that conforms with § 3033.10 that establishes the Postal Service's defenses, including affirmative defenses, to the allegations raised in the complaint;

(6) Identification of and justification for each defense asserted, including a separate section captioned ''Affirmative Defenses'' identifying any affirmative defenses and the justifications for each such defense;

(7) Proposed findings of fact, conclusions of law, and legal analysis relevant to the claims and arguments set forth in the answer;

(8) A certification that the Postal Service attempted to meet or confer with the person filing the complaint to resolve or settle the complaint, why the Postal Service believes additional such steps would be unsuccessful, and the reasons for that belief;

(9) A statement as to whether the issues presented are pending in or have been resolved by an existing Commission proceeding or a proceeding in any other forum; and

(10) All affidavits, declarations, documents, data and analysis upon which the Postal Service relies or intends to rely to support the facts alleged in the answer.

(b) The Commission may waive any of the requirements of paragraph (a) of this section to serve the interests of justice.

§ 3033.8 Pleadings filed in response to a complaint.

(a) Except as provided in paragraph (b) of this section or unless otherwise ordered by the Commission, the Postal Service shall file an answer to the complaint in the manner prescribed in this part within 20 days of service of the complaint.

(b) If appropriate, within 10 days after the complaint is filed, the Postal Service may file a dispositive motion with respect to the complaint, including a motion to dismiss. If the Postal Service files such a motion, unless otherwise ordered by the Commission, the period of time for filing its answer is altered such that if the Commission denies the motion or postpones disposition, the Postal Service shall file an answer within 7 days of the Commission's action.

(c) If the Postal Service files a motion pursuant to paragraph (b) of this section, responses to such motion are due within 7 days. The Commission shall issue its decision on such motion within 14 days or such other time as the Commission may establish.

(d) If the Postal Service's answer is delayed by the filing of a motion under paragraph (b) of this section, it may not obtain a further delay by filing another motion under paragraph (b) of this section.

§ 3033.9 Replies to answers raising affirmative defenses.

(a) Within 10 days after service of an answer containing affirmative defenses presented in accordance with the requirements of § 3033.7(a)(6), the

person that filed the complaint may file and serve a reply containing statements of relevant, material facts and legal arguments that are responsive to the specific factual allegations and legal arguments made by the Postal Service in support of its affirmative defenses. Material facts shall conform to the requirements of § 3033.10. No new causes of action may be raised in a reply.

(b) Failure to reply to an affirmative defense shall be deemed an admission of such affirmative defense and of any facts supporting such affirmative defense that are not specifically contradicted in the complaint.

(c) The reply shall contain proposed findings of fact, conclusions of law, and legal analysis relevant to the affirmative defenses raised in the answer.

(d) The reply shall contain as attachments all affidavits, declarations, documents, data and analysis upon which the complainant relies or intends to rely to support the facts alleged in the reply.

(e) If an answer does not contain affirmative defenses, the person filing the complaint may not file a reply to an answer.

(f) The Commission may waive any of the requirements of this section to serve the interests of justice.

§ 3033.10 Complete statement of facts.

(a) Each complaint, answer, and reply under this part must contain a statement of facts. All material facts in the statement of facts must be supported by relevant affidavits, declarations, and documentation, including copies of relevant written agreements, offers, counter offers, denials, and other correspondence. The statement of facts shall include a detailed explanation of how the facts presented are related to the allegations set forth in the pleadings, including a full identification and description of the communications, transmissions, services, or other conduct complained of and the nature of any alleged injury. Assertions based on information and beliefs are expressly prohibited unless accompanied by affidavit(s) or declaration(s) explaining the basis for the belief and why the facts could not be reasonably ascertained.

(b) Documents prepared for the purposes of settlement discussions may not be submitted as part of the statement of facts under paragraph (a) of this section.

§ 3033.11 Intervention.

(a) For purposes of this section, the term ''intervenor'' means a person who could be directly impacted by a decision on the merits of the complaint and who can demonstrate that intervention in the proceeding under this part is necessary to protect the person's interest(s).

(b) A potential intervenor may not expand the scope of the proceeding by addressing any issue(s) outside the scope of the complaint and answer.

(c) To intervene in a proceeding under this part, a potential intervenor must file a motion for leave to intervene within 10 days of an answer being filed pursuant to § 3033.7. The motion shall address how the potential intervenor meets the definition of intervenor under paragraph (a) of this section and how such intervention does not alter the scope of the proceeding pursuant to paragraph (b) of this section.

(d) The motion for leave to intervene must contain as an attachment an intervenor statement providing the following information:

(1) Whether the potential intervenor supports the complaint or answer; and

(2) The basis for potential intervenor's support.

(e) The attached intervenor statement filed pursuant to paragraph (d) of this section may contain the following supporting documentation, if applicable:

(1) A full explanation of why the Postal Service's action or inaction does or does not violate the applicable statutory standards under 39 U.S.C. 404a or related regulatory requirements, including citations to the relied upon section or sections of statute, regulation, order, or other regulatory requirements raised in the complaint or answer;

(2) A complete statement of facts that conforms with § 3033.10 that establishes the violation(s) or defense(s), including affirmative defense(s), raised by the potential intervenor in its intervenor statement;

(3) Proposed findings of fact, conclusions of law, and legal analysis relevant to the claims and arguments set forth in the intervenor statement; or

(4) All affidavits, declarations, data and analysis, and documents upon which the potential intervenor intends to rely to support the facts alleged in the intervenor statement;

(f) Responses to motions for leave to intervene, including responses to the intervenor statement filed pursuant to paragraph (d) of this section, may be filed by the person filing the complaint and the Postal Service within 10 days of the date the motion for leave to intervene is filed. Responses to the intervenor statement shall conform to the requirements of § 3033.9.

(g) No new causes of action may be raised in a response to a motion for leave to intervene.

(h) For purposes of this part, an officer of the Commission designated to represent the interests of the general public pursuant to 39 U.S.C. 505 shall be treated as an intervenor whose motion for leave to intervene has been granted.

§ 3033.12 Notice of proceeding.

(a) Whenever a complaint is filed under this part, the Commission shall issue a notice of the proceeding.

(b) Notice under paragraph (a) of this section shall be published on the Commission's Web site and contain the following:

(1) A brief summary outlining the claims and requested remedies contained in the complaint;

(2) A reference to the legal authority under which the proceeding is to be conducted;

(3) The identification of an officer of the Commission to represent the interests of the general public in the docket;

(4) A statement that interested persons may move to intervene in the proceeding in accordance with § 3033.11; and

(5) Such other information as the Commission deems appropriate.

Subpart C—Commission Determinations and Relief

§ 3033.15 Final order.

(a) The Commission will issue a final order on a complaint no later than 90 days after the complaint is filed. Such final order will also address outstanding intervention requests filed pursuant to § 3033.11, if applicable.

(b) Orders issued pursuant to paragraph (a) of this section shall include the Commission's written statement setting forth the bases for its determination.

(c) If the Commission finds the complaint to be justified, the Commission will provide for remedies in accordance with § 3030.50 of this chapter.

Shoshana M. Grove,

Secretary.

[FR Doc. 2013–13824 Filed 6–13–13; 8:45 am]

BILLING CODE 7710–FW–P

ENVIRONMENTAL PROTECTION AGENCY

40 CFR Part 271

[EPA–R04–RCRA–2012–0173; FRL–9822–9]

North Carolina: Final Authorization of State Hazardous Waste Management Program Revisions

AGENCY: Environmental Protection Agency (EPA).

ACTION: Proposed rule.

SUMMARY: North Carolina has applied to EPA for final authorization of changes to its hazardous waste program under the Resource Conservation and Recovery Act (RCRA). These changes correspond to certain Federal rules promulgated between July 1, 2004, and June 30, 2008 (also known as RCRA Clusters XV through XVIII). With this proposed rule, EPA is proposing to grant final authorization to North Carolina for these changes. Along with this proposed rule, EPA is publishing an immediate final rule in the ''Rules and Regulations'' section of today's **Federal Register** pursuant to which EPA is authorizing these changes. EPA did not issue a proposed rule before today because EPA believes this action is not controversial and does not expect comments that oppose it. EPA has explained the reasons for this authorization in the immediate final rule. Unless EPA receives written comments that oppose this authorization during the comment period, the immediate final rule in today's **Federal Register** will become effective on the date it establishes, and EPA will not take further action on this proposal. If EPA receives comments that oppose this action, EPA will withdraw the immediate final rule and it will not take effect. EPA will then respond to public comments in a later final rule based on this proposed rule. You may not have another opportunity to comment on these State program changes. If you want to comment on this action, you must do so at this time.

DATES: Send your written comments by July 15, 2013.

ADDRESSES: Submit your comments, identified by Docket ID No. EPA–R04–RCRA–2012–0173, by one of the following methods:

- *http://www.regulations.gov.* Follow the on-line instructions for submitting comments.
- *Email: gleaton.gwen@epa.gov*
- *Fax:* (404) 562–9964 (prior to faxing, please notify the EPA contact listed below)
- *Mail:* Send written comments to Gwendolyn Gleaton, Permits and State Programs Section, RCRA Programs and Materials Management Branch, RCRA Division, U.S. Environmental Protection Agency, Atlanta Federal Center, 61 Forsyth Street SW., Atlanta, Georgia 30303–8960.
- *Hand Delivery or Courier:* Gwendolyn Gleaton, Permits and State Programs Section, RCRA Programs and Materials Management Branch, RCRA Division, U.S. Environmental Protection Agency, Atlanta Federal Center, 61 Forsyth Street SW., Atlanta, Georgia 30303–8960. Such deliveries are only accepted during the Regional Office's normal hours of operation, and special arrangements should be made for deliveries of boxed information.

Instructions: Direct your comments to Docket ID No. EPA–R04–RCRA–2012–0173. EPA's policy is that all comments received will be included in the public docket without change and may be made available online at *www.regulations.gov* including any personal information provided, unless the comment includes information claimed to be Confidential Business Information (CBI), or other information whose disclosure is restricted by statute. Do not submit information that you consider to be CBI or otherwise protected through *www.regulations.gov* or email. The *www.regulations.gov* Web site is an ''anonymous access'' system, which means EPA will not know your identity or contact information unless you provide it in the body of your comment. If you send an email comment directly to EPA without going through *www.regulations.gov,* your email address will be automatically captured and included as part of the comment that is placed in the public docket and made available on the Internet. If you submit an electronic comment, EPA recommends that you include your name and other contact information in the body of your comment and with any disk or CD–ROM you submit. If EPA cannot read your comment due to technical difficulties and cannot contact you for clarification, EPA may not be able to consider your comment. Electronic files should avoid the use of special characters, any form of encryption, and be free of any defects or viruses. (For additional information about EPA's public docket, visit the EPA Docket Center homepage at *http://www.epa.gov/epahome/dockets.htm*).

Docket: All documents in the docket are listed in the *www.regulations.gov* index. Although listed in the index, some information is not publicly available, e.g., CBI or other information whose disclosure is restricted by statute. Certain other material, such as copyrighted material, will be publicly available only in hard copy. Publicly available docket materials are available either electronically in *www.regulations.gov,* or in hard copy. You may view and copy North Carolina's application at the EPA, Region 4, RCRA Division, Atlanta Federal Center, 61 Forsyth Street SW., Atlanta, Georgia 30303–8960.

You may also view and copy North Carolina's application from 8:00 a.m. to 4:00 p.m. at the North Carolina Department of Environment and Natural Resources, 217 West Jones Street, Raleigh, North Carolina 27603; telephone number (919) 707–8219. Interested persons wanting to examine these documents should make an appointment with the office at least a week in advance.

FOR FURTHER INFORMATION CONTACT: Gwendolyn Gleaton, Permits and State Programs Section, RCRA Programs and Materials Management Branch, RCRA Division, U.S. Environmental Protection Agency, Atlanta Federal Center, 61 Forsyth Street SW., Atlanta, Georgia 30303–8960; telephone number: (404) 562–8500; fax number: (404) 562–9964; email address: *gleaton.gwen@epa.gov.*

SUPPLEMENTARY INFORMATION: For additional information, please see the immediate final rule published in the ''Rules and Regulations'' section of this **Federal Register**.

Dated: May 16, 2013.

Gwendolyn Keyes Fleming,

Regional Administrator, Region 4.

[FR Doc. 2013–13847 Filed 6–13–13; 8:45 am]

BILLING CODE 6560–50–P

DEPARTMENT OF HEALTH AND HUMAN SERVICES

National Institutes of Health

42 CFR Part 52i

[Docket Number NIH–2007–0931]

RIN 0925–AA61

National Institute on Minority Health and Health Disparities Research Endowments

AGENCY: National Institutes of Health, Department of Health and Human Services.

ACTION: Notice of proposed rulemaking.

SUMMARY: The National Institutes of Health (NIH) proposes to issue regulations governing National Institute on Minority Health and Health Disparities (NIMHD) endowment grants awarded to section 736 and section 464z–4 Centers of Excellence to

facilitate minority health disparities research and other health disparities research.

DATES: Comments must be received on or before August 13, 2013 in order to ensure that the NIH will be able to consider the comments when preparing the final rule.

ADDRESSES: Individuals and organizations interested in submitting comments, identified by RIN 0925–AA47 and Docket No. NIH–2007–0931, may do so by any of the following methods:

Electronic Submissions

You may submit electronic comments in the following way:

• *Federal eRulemaking Portal: http://www.regulations.gov.* Follow the instructions for submitting comments.

To ensure timely processing of comments, the NIH is no longer accepting comments submitted to the agency by email. The NIH encourages you to continue to submit electronic comments by using the Federal eRulemaking Portal: *http://www.regulations.gov.*

Written Submissions

You may submit written comments in the following ways:

• *Fax:* 301–402–0169 (not a toll-free number).

• *Mail:* Jerry Moore, NIH Regulations Officer, Office of Management Assessment, National Institutes of Health, 6011 Executive Boulevard, Room 601, MSC 7669, Rockville, MD 20852–7669.

Instructions: All submissions received must include the agency name and docket number and Regulatory Information Number (RIN) for this rulemaking. All comments received may be posted without change, including any personal information provided.

Docket: For access to the docket to read background documents or comments received, go to the eRulemaking.gov Portal and insert the docket number provided in brackets in the heading on page one of this document into the ''Search'' box and follow the prompts.

FOR FURTHER INFORMATION CONTACT: Jerry Moore at the address above or telephone 301–496–4607 (not a toll-free number).

SUPPLEMENTARY INFORMATION: Section 464z–3 (42 U.S.C. 285t) of the Public Health Service (PHS) Act authorizes the Director of the NIMHD to carry out a program to facilitate minority health disparities research and other health disparities research by providing research endowments to eligible centers of excellence under sections 736 and 464z–4 of the PHS Act. The program is called the NIMHD Research Endowment Program (Endowment Program). The objective of the Endowment Program is to build research and training capacity and infrastructure at eligible section 736 health professions schools (42 U.S.C. 293) and section 464z–4 biomedical and behavioral research institutions (42 U.S.C. 285t–1) to facilitate minority health and other health disparities research to close the disparity gap in the burden of illness and death experienced by racial and ethnic minority Americans and other health disparity populations. Endowment Program activities may include strengthening the research infrastructure through the renovation of facilities, purchasing of state-of-the-art instruments and equipment, and enhancing information technology; enhancing the academic environment by recruiting a diverse faculty and creating relevant courses in such topics as research methodology and health disparities as additions to the existing curriculum; enhancing recruitment of individuals currently underrepresented in the biomedical, clinical, behavioral, and social sciences; or other relevant activities.

Section 464z–4 of the PHS Act authorizes the NIMHD Director to make awards to designated biomedical and behavioral research institutions, alone or as a participant in a consortium, that meet certain criteria for the purpose of assisting the institutions in supporting programs of excellence in training for members of health disparity populations or other health disparity populations. This program is called the NIMHD Center of Excellence for Research and Training. Section 464z–4(f) of the PHS Act permits the NIMHD Director to expend a portion of such an award for research endowment.

To be eligible to apply for the Endowment Program, Centers of Excellence (funded under section 736 or section 464z–4 of the PHS Act) must have an institutional endowment that is equal to or less than 50 percent of the national median of endowment funds at institutions that conduct similar biomedical research and training of health professionals. Endowment Program applications filed by institutions meeting eligibility requirements undergo peer review by outside experts to evaluate the scientific and technical merit of the proposed activities and the adequacy of the endowment fund management plan.

Reviewers use the criteria of significance, investigators, innovation, approach, and environment to determine the overall impact of the application. After receiving an Endowment Program award, a grantee must provide documentation to the NIMHD over a 20-year period regarding endowment fund activity, including investments, income, and expenditures for activities consistent with its strategic plan.

With this notice of proposed rulemaking (NPRM), the NIH is announcing its proposed regulations governing endowments and inviting the public to comment on this proposal.

This NPRM specifies the endowment research grants or endowment portion of an award to which the proposed regulations apply (section 52i.1), the definitions (section 52i.2), who is eligible (section 52i.3) and how to apply for a grant under the program (section 52i.5), and under what conditions an eligible institution that is a recipient may transfer to a foundation a research endowment grant (section 52i.4). Additionally, the NPRM specifies how endowment grant applications will be evaluated (section 52i.6), what is the nature of the grants (52i.7), how much endowment fund income a grantee may withdraw and for what purpose (sections 52i.9 and 52i.10), what a grantee must record and report (section 52i.11), and when and for what purposes a grantee may spend the endowment fund corpus (section 52i.8). This NPRM also specifies what happens if a grantee fails to administer the research endowment grant in accordance with applicable regulations (section 52i.12), what other HHS policies and regulations apply (section 52i.13), and what additional conditions the NIMHD Director may impose when, in his judgment, the conditions are necessary (section 52i.14).

The following is provided as public information.

Regulatory Impact Analyses (RIA)

We have examined the impacts of the this rule as required by Executive Order 12866, Regulatory Planning and Review (September 30, 1993); Executive Order 13563, Improving Regulation and Review (January 18, 2011); the Regulatory Flexibility Act (5 U.S.C. 601–612); the Unfunded Mandates Reform Act of 1995 (Pub. L. 104–4); and Executive Order 13132, Federalism (August 4, 1999).

Executive Orders 12866 and 13563

Executive Order 12866, Regulatory Planning and Review, directs agencies to assess all costs and benefits of available regulatory alternatives and, when regulation is necessary, to select regulatory approaches that maximize net benefits (including potential economic, environmental, public health

and safety, and other advantages; distributive impacts; and equity). A RIA must be prepared for major rules with economically significant effects ($100 million or more in one year). Based on our analysis, we believe that the proposed rulemaking does not constitute an economically significant regulatory action. Additionally, if a regulatory action is deemed to fall within the scope of the definition of the term ''significant regulatory action'' contained in section 3(f) of Executive Order 12866, pre-publication review by the Office of Information and Regulatory Affairs (OIRA), Office of Management and Budget (OMB) is required. This proposed rule was reviewed under the criteria of Executive Order 12866 and was not deemed a ''significant regulatory action.''

Executive Orders 12866 and 13563 direct agencies to assess all costs and benefits of available regulatory alternatives and, if regulation is necessary, to select regulatory approaches that maximize net benefits (including potential economic, environmental, public health, and safety effects; distributive impacts; and equity). Executive Order 13563 emphasizes the importance of quantifying both costs and benefits, of reducing costs, of harmonizing rules, and of promoting flexibility.

Benefits

The proposed regulations will add transparency for potential applicants regarding who is eligible and how to apply for a grant under the program, how grant applications will be evaluated, and under what conditions an eligible institution that is a recipient may transfer to a foundation a research endowment grant. Additionally, the NPRM specifies the nature of the grants, how much endowment fund income a grantee may withdraw and for what purpose, what a grantee must record and report, and when and for what purposes a grantee may spend the endowment fund corpus.

This NPRM also enhances compliance and effective fiduciary responsibilities for the federal government. It specifies what happens if a grantee fails to administer the research endowment grant in accordance with applicable regulations, what other HHS policies and regulations apply, and additional conditions the NIMHD Director may impose when, in his judgment, the conditions are necessary. The Director may, with respect to any grant award, impose additional conditions prior to, or at the time of, any award when in the Director's judgment the conditions are necessary to ensure the carrying out of the purposes of the award, the interests of the public health, or the conservation of grant funds.

Costs

Based on the provisions of the PHS Act, approximately twelve Institutions of Higher Education (IHEs) are eligible for the NIMHD Research Endowment Program. Costs for participation can be subdivided into those associated with the application process and those required for the necessary recordkeeping. The application process includes a competitive submission, as well as noncompetitive progress report for those institutions awarded funds under the NIMHD Research Endowment Program for subsequent years within the project period. Based on estimates provided in the PHS 424 instructions, an average application should require approximately 22 hours to complete and 15 hours for a subsequent progress report, according to the PHS 2590 instructions. The contribution of various professional disciplines such as biomedical researchers, contract/grants specialists, and technical staff to the reporting and recordkeeping requirements varies. Cost estimates are based on a blended analysis of institutional salary structure and prevailing market conditions for certain categories of personnel. In addition, fiscal year 2012 NIH salary limitations were included in the derivation of cost estimates, where applicable.

	Annual number of respondents [1]	Annual frequency	Estimated cost per response [2]	Estimated annual costs [3]
Reporting:				
§ 52i.3(b)(2)	4	1	[4] $134.60	$538.40
§ 52i.4(a)	4	1	[5] 33.65	134.60
§ 52i.4(c)	4	1	[6] 33.65	134.60
§ 52i.5(a)	4	1	[7] 3,602.00	14,408.00
§ 52i.9(b)	4	1	[8] 345.56	1,382.24
§ 52i.11(b)	12	1	[9] 1,775.00	21,300.00
§ 52i.11(d)	12	1	[10] 200.00	2,400.00
Subtotal				40,297.84
Recordkeeping:				
§ 52i.10	12	1	[11] 400.00	4,800.00
§ 52i.11(a)(1)	12	1	[12] 67.30	807.60
§ 52i.11(a)(2)	12	1	[13] 67.30	807.60
§ 52i.11(a)(3)	12	1	[14] 67.30	807.60
§ 52i.11(a)(4)	12	1	[15] 67.30	807.60
§ 52i.11(b)	12	1	[16] 269.20	3,230.40
Subtotal				11,260.80
Total				51,558.64

[1] There is currently a total of twelve institutions eligible for the NIMHD Research Endowment Program. Historically, requests for applications are solicited every three years.
[2] Average burden hours x average cost per hour.
[3] Annual number of respondents x cost per response.
[4,5,6] Based on contracts/grants staff at $33.65/hour.
[7] Based on the contributions of the principal investigator at $86.39/hour, participating faculty at $72.12/hour, contracts/grants staff at $33.65/hour, financial investment advisor at $200/hour, and administrative support at $16.83/hour.
[8] Based on principal investigator at $86.39/hour.
[9] Based on the contributions of the principal investigator at $86.39/hour, participating faculty at $72.12/hour, contracts/grants staff at $33.65/hour, financial investment advisor at $200/hour, and administrative support at $16.83/hour.
[10] Based on financial analyst/auditor at $100/hour.
[11] Based on financial investment advisor at $200/hour.

[12,13,14,15] Based on contracts/grants staff at $33.65/hour.
[16] Based on contracts/grants staff at $33.65/hour.

Alternatives

The unique and complex nature of the NIMHD Research Endowment Program with regard to the management of endowment funds, restrictive nature of expenditures, and strict reporting provides a challenge to the necessary federal oversight. The proposed draft rule provides the guidelines for the creation of an operation structure of the institutional program. The implementation of the draft rule would provide clarity to eligible and participating institutions with regard to expectations as a grantee under the program, as well as enhance the ability of the federal government to ensure the grantees are in compliance with all the applicable provisions of the statute.

The Regulatory Flexibility Act

The Regulatory Flexibility Act (5 U.S.C. 601–612) requires agencies to analyze regulatory options that would minimize any significant impact of the rule on small entities. For the purposes of this analysis, small entities include small business concerns as defined by the Small Business Administration, usually businesses with fewer than 500 employees. Eligibility requirements of the Research Endowment program, as codified in Public Law 111–148, limits the universe of potential applicants to approximately twelve IHEs. Utilizing sources of information such as local business bureaus, workforce statistics, and institution Web sites, a reasonable determination was made as to the approximate number of employees at eligible institutions. The range estimates are from 175–550 for the smallest institution to 3,976 for the largest. Consequently, less than 10 percent of these eligible IHEs have fewer than 500 employees. Accordingly, the Secretary certifies than any final rule resulting from this proposed rule will not have a significant impact on a significant number of small entities.

Unfunded Mandates Reform Act of 1995

Section 202(a) of the Unfunded Mandates Reform Act of 1995 requires that agencies prepare a written statement, which includes an assessment of anticipated costs and benefits, before proposing ''any rule that includes any Federal mandate that may result in the expenditure by State, local, and tribal governments, in the aggregate, or by the private sector, of $100,000,000 or more (adjusted annually for inflation [with base year of 1995]) in any 1 year.'' The current inflation-adjusted statutory threshold is approximately $139 million based on the Bureau of Labor Statistics inflation calculator. The Secretary certifies that this rule does not mandate any spending by state, local or tribal government in the aggregate or by the private sector. Participation in the NIMHD Research Endowment Program is voluntary and not mandated.

Executive Order 13132

Executive Order 13132, Federalism, requires federal agencies to consult with state and local government officials in the development of regulatory policies with federalism implications. The Secretary reviewed the proposed rule as required under the Executive Order and determined that it does not have federalism implications. The Secretary certifies that the proposed rule will not have an effect on the states or on the distribution of power and responsibilities among the various levels of government.

Paperwork Reduction Act

This proposed rule contains requirements that are subject to OMB approval under the Paperwork Reduction Act of 1995, as amended (44 U.S.C. chapter 35). Sections 52i.3(b)(2), 52i.4(a), 52i.4(c), 52i.5(a), 52i.9, 52i.11(b), and 52i.11(d) contain reporting and information collection requirements that are subject to OMB approval under the Paperwork Reduction Act. Sections 52i.10, 52i.11(a)(1), 52i.11(a)(2), 52i.11(a)(3), 52i.11(a)(4), and 52i.11(b) contain recordkeeping requirements that are subject to OMB review under the Paperwork Reduction Act. The title, description, and respondent description of the information collection and recordkeeping requirements contained in this proposed rule have been submitted to OMB for review. Other organizations and individuals desiring to submit comments on the information collection and recordkeeping requirements, including the burden estimates provided, should send their comments to: (1) Seleda Perryman, Project Clearance Officer, National Institutes of Health, Rockledge Center 1, 6705 Rockledge Drive, Room 3509, Bethesda, MD 29817, telephone 301–594–7949 (not a toll-free number); and (2) the Office of Information and Regulatory Affairs, OMB, *OIRA_submission@omb.eop* or by fax to 202–395–6974, and mark ''Attention: Desk Officer for the National Institutes of Health, Department of Health and Human Services.'' After we obtain OMB approval, we will publish the OMB control number in the **Federal Register**.

Title: National Institute on Minority Health and Health Disparities Research Endowments.

Description: The NIMHD Research Endowment Program builds research capacity and research infrastructure in order to facilitate minority health research and research regarding other health disparity populations at eligible institutions under sections 736 and 464z–4 of the PHS Act.

Respondent Description: Institutions currently funded under Section 736 or Section 464z–4 of the Public Health Service Act (PHS Act).

ESTIMATED ANNUAL REPORTING AND RECORDKEEPING BURDEN NIMHD RESEARCH ENDOWMENT PROGRAM

	Annual number of respondents	Annual frequency	Average burden hours	Annual burden hours per response [17]
Reporting:				
§ 52i.3(b)(2)	4	1	4	16
§ 52i.4(a)	4	1	1	4
§ 52i.4(c)	4	1	1	4
§ 52i.5(a)	4	1	22	88
§ 52i.9(b)	4	1	4	16
§ 52i.11(b)	12	1	15	180
§ 52i.11(d)	12	1	2	24
Subtotal			49	332

ESTIMATED ANNUAL REPORTING AND RECORDKEEPING BURDEN NIMHD RESEARCH ENDOWMENT PROGRAM—Continued

	Annual number of respondents	Annual frequency	Average burden hours	Annual burden hours per response [17]
Recordkeeping:.				
§ 52i.10	12	1	2	24
§ 52i.11(a)(1)	12	1	2	24
§ 52i.11(a)(2)	12	1	2	24
§ 52i.11(a)(3)	12	1	2	24
§ 52i.11(a)(4)	12	1	2	24
§ 52i.11(b)	12	1	8	96
Subtotal			18	216
Total			67	548

[17] Annual number of respondents × annual frequency × average burden hours.

Catalogue of Federal Domestic Assistance

The Catalogue of Federal Domestic Assistance-numbered program applicable to this rule is: 93.307—Minority Health and Health Disparities Research

List of Subjects in 42 CFR Part 52i

Grant programs—Health, medical research.

For reasons described in the preamble, it is proposed to amend title 42 of the Code of Federal Regulations by adding part 52i to read as follows.

PART 52i—NATIONAL INSTITUTE ON MINORITY HEALTH AND HEALTH DISPARITIES RESEARCH ENDOWMENT PROGRAMS

Sec.

52i.1 To what programs does this part apply?
52i.2 Definitions.
52i.3 Who is eligible to apply?
52i.4 Under what conditions may an eligible institution designate a foundation as the recipient of a research endowment grant?
52i.5 How to apply for a grant.
52i.6 Evaluation and disposition of research endowment grant applications.
52i.7 Grant awards.
52i.8 When and for what purposes may a grantee spend the endowment fund corpus?
52i.9 How much endowment fund income may a grantee spend and for what purposes?
52i.10 How shall a grantee calculate the amount of endowment fund income that it may withdraw and spend?
52i.11 What shall a grantee record and report?
52i.12 What happens if a grantee fails to administer the research endowment grant in accordance with applicable regulations?
52i.13 Other HHS policies and regulations that apply.
52i.14 Additional conditions.

Authority: 42 U.S.C. 216, 285t–285t–1.

§ 52i.1 To what programs does this part apply?

This part applies to grants awarded under section 464z–3(h) of the Public Health Service Act (the Act), which authorizes the Director of the National Institute on Minority Health and Health Disparities (NIMHD) to carry out a program of research endowment grants to eligible institutions to facilitate minority health and health disparities research (the NIMHD Research Endowment Program), and, with the exception of §§ 52i.5 and 52i.6, applies to that portion of an award made under section 464z–4(f) of the Act authorized by the NIMHD Director for research endowment.

§ 52i.2 Definitions.

As used in this part:

Act means the Public Health Service Act, as amended (42 U.S.C. 201 et seq.).

Center of Excellence means, for purposes of grants authorized by section 464z–3(h) of the Act, an institution designated as a Center of Excellence and receiving a grant under section 736 (42 U.S.C. 293) or section 464z–4 (42 U.S.C. 285t–1) of the Act.

Director means the Director, NIMHD, of the National Institutes of Health.

Endowment fund means a fund that is established by state law, by an institution, or by a foundation associated with an institution that is exempt from taxation and is maintained for the purpose of generating income for the support of minority and health disparities research or research training if the funds are from a grant made under section 464z–4 of the Act. The principal or corpus of the fund may not be spent except as noted in § 52i.8(b).

Endowment fund corpus means an amount equal to the total grant funds awarded under this part or equal to the amount designated as endowment under section 464z–4 of the Act.

Endowment fund income means the income generated from investing the corpus, i.e., the amount of which exceeds the endowment fund corpus.

Health disparity population means a population that, as determined by the Director of the NIMHD after consultation with the Director of the Agency for Healthcare Research and Quality, has a significant disparity in the overall rate of disease incidence, prevalence, morbidity, mortality, or survival rates in the population as compared to the health status of the general population.

Health disparities research means basic, clinical, and behavioral research on health disparity populations (including individual members and communities of such populations) that relates to health disparities, including the causes of such disparities and methods to prevent, diagnose, and treat such disparities.

Health disparity students means students of minority health disparity populations or other health disparities populations.

Institutional endowment (IE) means the corporate or system-wide endowment fund that is the sum total of the endowment assets of all campuses and their components. This includes, but is not limited to, endowments managed by an institution's foundations/associations as well as state university systems.

Institution system-wide means all campuses and components.

Minority health conditions means, with respect to individuals who are members of minority groups, all diseases, disorders, and conditions (including with respect to mental health and substance abuse):

(1) Unique to, more serious, or more prevalent in such individuals;

(2) For which the factors of medical risk or types of medical intervention may be different for such individuals, or for which it is unknown whether such

factors or types are different for such individuals; or

(3) With respect to which there has been insufficient research involving such individuals as subjects or insufficient data on such individuals.

Minority health disparities research means basic, clinical, and behavioral research on minority health conditions, including research to prevent, diagnose, and treat such conditions.

Racial and ethnic minority or minority group means American Indians (including Alaska Natives, Eskimos, and Aleuts), Asian Americans, Native Hawaiians and other Pacific Islanders, Blacks, and Hispanics. Hispanic means individuals whose origin is Mexican, Puerto Rican, Cuban, Central or South American, or other Spanish culture or origin.

Secretary means the Secretary of Health and Human Services and any other officer or employee of the Department of Health and Human Services to whom the authority involved has been delegated.

§ 52i.3 Who is eligible to apply?

(a) To be eligible for a grant under section 464z–3(h) of the Act an applicant:

(1) Must be a Center of Excellence under section 736 (42 U.S.C. 293) or section 464z–4 (42 U.S.C. 285t–1) of the Act, and

(2) Must have an institutional endowment that is equal to or less than 50 percent of the national median of endowment funds at institutions that conduct similar biomedical research and training of health professionals.

(b) To be eligible for a portion of a grant award to be expended as a research endowment under section 464z–4(f) of the Act, an applicant:

(1) Must be a designated biomedical and behavioral research institution under section 464z–4 of the Act, and

(2) Must submit those materials prescribed by the Director, NIMHD.

§ 52i.4 Under what conditions may an eligible institution designate a foundation as the recipient of a research endowment grant?

A number of universities and other organizations have established closely affiliated, but separately incorporated, organizations to facilitate the administration of research and other programs supported by federal funds. Such legally independent entities are often referred to as ''foundations,'' although this term does not necessarily appear in the name of the organization. An institution awarded an endowment grant under section 464z–3(h) of the Act or using designated grant funds for endowment purposes under section 464z–4(f) of the Act may designate a foundation associated with the institution to receive the endowment funds only for investment purposes if:

(a) The institution assures in its application that the foundation is legally authorized to receive the endowment funds and to administer the endowment funds in accordance with the regulations set forth in this part;

(b) The foundation agrees to administer the endowment funds in accordance with the regulations in this part;

(c) The institution agrees to be liable for any violation by the foundation of any applicable regulation, including any violation resulting in monetary liability; and

(d) The grantee institution has control and is responsible for the administration of the grant accounts.

§ 52i.5 How to apply for a grant.

(a) Each institution interested in applying for a grant under section 464z–3(h) of the Act must submit an application at such time and in such form and manner as the Secretary may prescribe.

(b) An institution described in § 52i.3 that has received a grant under this part may apply for another grant under this part if:

(1)(i) The institution still meets the eligibility requirements in § 52i.3; and

(ii) The institution is in the last year of funding provided by NIH under this part; or

(2) The institution no longer has an active grant under this part from NIH.

§ 52i.6 Evaluation and award of research endowment grant applications.

All applications filed in accordance with this part and meeting the minimal eligibility requirements shall be evaluated and recommended by technical and scientific peer review. The review evaluation shall take into account, among other pertinent factors:

(a) The scientific and technical merit of the proposed project to facilitate minority health disparities research and other health disparities research;

(b) The likelihood of its producing meaningful results;

(c) The adequacy of the applicant's resources available for the project; and

(d) The adequacy of the applicant's plan for managing the endowment fund.

§ 52i.7 Grant awards.

(a) Within the limits of funds, and upon such review and recommendation as may be required by law, the Director shall award a grant to those applicants whose approved projects will in the Director's judgment best promote the purposes of this part.

(b) An institution described in § 52i.3 that receives a grant under this part or an institution described in section 464z–4(f) of the Act authorized to use grant funds for endowment purposes shall follow the spending rules under the law of the state in which the institution is located and the spending rules/policies adopted by the recipient institution, provided that such spending rules are not inconsistent with applicable federal regulations/policies.

(c) Grants awarded under this part or grant funds designated for endowment purposes as described under section 464z–4(f) of the Act must be invested no later than 90 days after the start date of the grant.

(d) The institution, in investing the endowment fund established under this section, shall exercise the judgment and care, under the circumstances then prevailing, that a person of prudence, discretion, and intelligence would exercise in the management of such person's own affairs and avoid all appearances of conflict of interest in the management of this fund.

(e) The total amount of an endowment grant under this part or the designated amount of the grant under section 464z–4(f) of the Act must be maintained as corpus by the institution for 20 years from the date of award.

(f) In the case of situations in which investment conditions result in the corpus referred to in paragraph (e) of this section having a net market value less than the value of the funds at the time of their receipt, appropriate actions must be taken (e.g., careful review of the investment strategy) in order to preserve the value of the endowment corpus.

(g) An institution described in § 52i.3 receiving an endowment grant under section 464z–3(h) of the Act may not simultaneously receive endowment funds under section 464z–4(f) of the Act.

(h) Consistent with section 464z–4(f) of the Act, the Director, NIMHD, may designate for a research endowment some of the funds awarded to a Center of Excellence for research education and training.

§ 52i.8 When and for what purposes may a grantee spend the endowment fund corpus?

(a) A grantee may not withdraw or spend any part of the endowment fund corpus for a total of 20 years from the date of the original grant award.

(b) At the end of the 20-year period, during which the endowment corpus must be maintained, the grantee institution is encouraged to preserve the

endowment fund corpus but may use the endowment fund corpus for any purpose that expands or develops the institution's minority health and/or health disparities research and/or training capacity.

§ 52i.9 How much endowment fund income may a grantee spend and for what purposes?

(a) Any endowment income realized in the initial year following the grant award under this part shall not be expended to support programmatic activities until after conclusion of the initial year of the grant.

(b) After the first year of the grant, a grantee awarded funds under this part may spend endowment income realized from funds it receives solely in accordance with the regulations of this part, the terms and conditions of the award, NIMHD policies and procedures, and the grantee's strategic plan that has been approved by the NIMHD and includes priorities for the use of the endowment fund income.

§ 52i.10 How shall a grantee calculate the amount of endowment fund income that it may withdraw and spend?

A grantee awarded funds under this part shall calculate the amount of endowment fund income that it may withdraw and spend at a particular time as follows:

(a) On each date that the grantee plans a withdrawal of endowment fund income, the grantee must determine the amount of the income by calculating the value of the fund that exceeds the endowment fund corpus.

(b) If the total value of the endowment fund exceeds the endowment fund corpus, the grantee may withdraw and spend the excess amount, i.e., the endowment fund income, in accordance with § 52i.9.

§ 52i.11 What shall a grantee record and report?

A grantee awarded funds under this part shall:

(a) Maintain appropriate records in compliance with this part and other requirements as referenced in terms of the award, including documentation of:

(1) The type and amount of investments of the endowment fund;

(2) The amount of endowment fund income and corpus;

(3) The amount and purpose of expenditures of endowment fund income; and

(4) The expenses and charges associated with the management of the endowment funds if such expenses and charges were paid from the grant funds.

(b) Retain records in accordance with 45 CFR 74.53. The endowment fund corpus, fund income, and fund expenditures must be reported over a 20-year period, and supporting records are to be retained for 3 years after the submission of the final report to the NIMHD;

(c) Permit authorized officials the authority to conduct a review, as set forth in 45 CFR 74.53(e) (which states that the Department of Health and Human Services (HHS) awarding agencies, the HHS Inspector General, the U.S. Comptroller General, and any of their duly authorized representatives ''have the right of timely and unrestricted access to any books, documents, papers, or other records of recipients that are pertinent to the awards, in order to make audits, examinations, excerpts, transcripts, or copies of such documents''); and

(d) Submit Financial Status Reports, as set forth in 45 CFR 74.52, as required by the NIMHD and in the form prescribed. A final Financial Status Report shall be required 20 years after the date of the original grant award.

§ 52i.12 What happens if a grantee fails to administer the research endowment grant in accordance with applicable regulations?

(a) The Director, after giving notice and an opportunity for a hearing, may authorize the termination of a grant awarded and/or recovery of funds under this part during the 20-year period if the grantee:

(1) Withdraws or spends any part of the endowment fund corpus in violation of this part;

(2) Spends any portion of the endowment fund income not permitted to be spent in this part;

(3) Fails to invest the endowment fund corpus in accordance with the investment standards set forth in this part;

(4) Fails to meet the requirements in § 52i.7; or

(5) Otherwise fails to comply with the terms and conditions of the award.

(b) Recovery of funds may include up to the amount of endowment awards plus any income earned.

§ 52i.13 Other HHS policies and regulations that apply.

Several other regulations and policies apply to grants under this part. These include, but are not limited to:

(a) 2 CFR part 376—HHS Nonprocurement debarment and suspension

(b) 42 CFR part 50, Subpart A—Responsibilities of PHS awardee and applicant institutions for dealing with and reporting possible misconduct in science

(c) 42 CFR part 50, Subpart D—Public Health Service grant appeals procedures

(d) 45 CFR part 16—Procedures of the Departmental Grant Appeals Board

(e) 45 CFR part 46—Protection of human subjects

(f) 45 CFR part 74—Uniform administrative requirements for awards and subawards to institutions of higher education, hospitals, other nonprofit organizations, and commercial organizations; and certain grants and agreements with states, local governments, and Indian tribal governments

(g) 45 CFR part 80—Nondiscrimination under programs receiving federal assistance through the Department of Health and Human Services—Effectuation of Title VI of the Civil Rights Act of 1964

(h) 45 CFR part 81—Practice and procedure for hearings under part 80 of this title

(i) 45 CFR part 82—Government-wide requirements for drug-free workplace (financial assistance)

(j) 45 CFR part 84—Nondiscrimination on the basis of handicap in programs and activities receiving or benefiting from federal financial assistance

(k) 45 CFR part 86—Nondiscrimination on the basis of sex in education programs and activities receiving or benefiting from federal financial assistance

(l) 45 CFR part 91—Nondiscrimination on the basis of age in HHS programs and activities receiving federal financial assistance

(m) 45 CFR part 92—Uniform administrative requirements for grants and cooperative agreements to state and local government

(n) 45 CFR part 93—New restrictions on lobbying

(o) 59 FR 34496 (July 5, 1994)—NIH Guidelines for Research Involving Recombinant DNA Molecules. [**Note:** This policy is subject to change, and interested persons should contact the Office of Biotechnology Activities, NIH, Rockledge 1, 6705 Rockledge Drive, Suite 750, MSC 7985, Bethesda, MD 20892 (telephone 301–435–2152, not a toll-free number), to obtain references to the current version and any amendments. Information may be obtained also by contacting the Office of Biotechnology Activities via email at *oba@od.nih.gov* and via the OBA Web site at *http://www4.od.nih.gov/oba*.]

(p) 59 FR 14508 (March 28, 1994)—NIH Guidelines on the Inclusion of Women and Minorities as Subjects in Clinical Research. [**Note:** This policy is subject to change, and interested persons should contact the Office of Research on Women's Health, NIH, Suite 400, 6707 Democracy Boulevard,

MSC 5484, Bethesda, MD 20892–5484 (telephone 301–402–1770, not a toll-free number), to obtain references to the current version and any amendments. Information may be obtained also by contacting the Office of Research on Women's Health Web site at *http://ORWH.od.nih.gov.*]

(q) NIH Grants Policy Statement (October 1, 2012). This version is located on the NIH Web site at *http://grants.nih.gov/grants/policy/nihgps_2012/index.htm.* [**Note:** This policy is subject to change, and interested persons should contact the Office of Policy for Extramural Research Administration (OPERA), Office of Extramural Research, NIH, 6701 Rockledge Drive, Suite 350, MSC 7974, Bethesda, MD 20892–7974 (telephone 301–435–0938 or toll-free 800–518–4726), to obtain references to the current version and any amendments. Information may be obtained also by contacting the OPERA Division of Grants Policy via email at *GrantsPolicy@mail.nih.gov.* Previous versions of the NIH Grants Policy Statement are archived at *http://grants.nih.gov/grants/policy/policy.htm.*]

(r) Public Health Service Policy on Humane Care and Use of Laboratory Animals, Office of Laboratory Animal Welfare, NIH (Revised August 2002). [**Note:** This policy is subject to change, and interested persons should contact the Office of Laboratory Animal Welfare, NIH, Rockledge 1, Suite 360, MSC 7982, 6705 Rockledge Drive, Bethesda, MD 20892–7982 (telephone 301–594–2382, not a toll-free number), to obtain references to the current version and any amendments. Information may be obtained also via the OLAW Web site at *http://grants.nih.gov/grants/olaw/olaw.htm.*]

§ 52i.14 Additional conditions.

The Director may, with respect to any grant award, impose additional conditions prior to, or at the time of, any award when in the Director's judgment the conditions are necessary to ensure the carrying out of the purposes of the award, the interests of the public health, or the conservation of grant funds.

Dated: February 19, 2013.

Francis S. Collins,

Director, National Institutes of Health.

Approved: May 2, 2013.

Kathleen Sebelius,

Secretary.

[FR Doc. 2013–13991 Filed 6–13–13; 8:45 am]

BILLING CODE 4140–01–P

DEPARTMENT OF THE INTERIOR

Fish and Wildlife Service

50 CFR Part 20

[Docket No. FWS–HQ–MB–2013–0057; FF09M21200–134–FXMB1231099BPP0]

RIN 1018–AY87

Migratory Bird Hunting; Supplemental Proposals for Migratory Game Bird Hunting Regulations for the 2013–14 Hunting Season; Notice of Meetings

AGENCY: Fish and Wildlife Service, Interior.

ACTION: Proposed rule; supplemental.

SUMMARY: We, the U.S. Fish and Wildlife Service (Service), proposed in an earlier document to establish annual hunting regulations for certain migratory game birds for the 2013–14 hunting season. This supplement to the proposed rule provides the regulatory schedule, announces the Service Migratory Bird Regulations Committee and Flyway Council meetings, and provides Flyway Council recommendations resulting from their March meetings.

DATES: *Comments:* You must submit comments on the proposed regulatory alternatives for the 2013–14 duck hunting seasons on or before June 22, 2013. Following subsequent **Federal Register** notices, you will be given an opportunity to submit comments for proposed early-season frameworks by July 27, 2013, and for proposed late-season frameworks and subsistence migratory bird seasons in Alaska by August 31, 2013.

Meetings: The Service Migratory Bird Regulations Committee will meet to consider and develop proposed regulations for early-season migratory bird hunting on June 19 and 20, 2013, and for late-season migratory bird hunting and the 2014 spring/summer migratory bird subsistence season in Alaska on July 31 and August 1, 2013. All meetings will commence at approximately 8:30 a.m.

ADDRESSES: *Comments:* You may submit comments on the proposals by one of the following methods:

- *Federal eRulemaking Portal: http://www.regulations.gov.* Follow the instructions for submitting comments on Docket No. FWS–HQ–MB–2013–0057.
- *U.S. mail or hand-delivery:* Public Comments Processing, Attn: FWS–HQ–MB–2013–0057; Division of Policy and Directives Management; U.S. Fish and Wildlife Service; 4401 N. Fairfax Drive, MS 2042–PDM; Arlington, VA 22203.

We will not accept emailed or faxed comments. We will post all comments on *http://www.regulations.gov.* This generally means that we will post any personal information you provide us (see the Public Comments section below for more information).

Meetings: The Service Migratory Bird Regulations Committee will meet in room 200 of the U.S. Fish and Wildlife Service's Arlington Square Building, 4401 N. Fairfax Dr., Arlington, VA.

FOR FURTHER INFORMATION CONTACT: Ron W. Kokel, U.S. Fish and Wildlife Service, Department of the Interior, MS MBSP–4107–ARLSQ, 1849 C Street NW., Washington, DC 20240; 703–358–1714.

SUPPLEMENTARY INFORMATION:

Regulations Schedule for 2013

On April 9, 2013, we published in the **Federal Register** (78 FR 21200) a proposal to amend 50 CFR part 20. The proposal provided a background and overview of the migratory bird hunting regulations process, and addressed the establishment of seasons, limits, and other regulations for hunting migratory game birds under §§ 20.101 through 20.107, 20.109, and 20.110 of subpart K. This document is the second in a series of proposed, supplemental, and final rules for migratory game bird hunting regulations. We will publish proposed early-season frameworks in early July and late-season frameworks in early August. We will publish final regulatory frameworks for early seasons on or about August 16, 2013, and for late seasons on or about September 14, 2013.

Service Migratory Bird Regulations Committee Meetings

The Service Migratory Bird Regulations Committee (SRC) will meet June 19–20, 2013, to review information on the current status of migratory shore and upland game birds and develop 2013–14 migratory game bird regulations recommendations for these species, plus regulations for migratory game birds in Alaska, Puerto Rico, and the Virgin Islands. The Committee will also develop regulations recommendations for September waterfowl seasons in designated States, special sea duck seasons in the Atlantic Flyway, and extended falconry seasons. In addition, the Committee will review and discuss preliminary information on the status of waterfowl.

At the July 31–August 1, 2013, meetings, the Committee will review information on the current status of waterfowl and develop 2013–14 migratory game bird regulations recommendations for regular waterfowl

seasons and other species and seasons not previously discussed at the early-season meetings. In addition, the Committee will develop recommendations for the 2014 spring/summer migratory bird subsistence season in Alaska.

In accordance with Departmental policy, these meetings are open to public observation. You may submit written comments to the Service on the matters discussed.

Announcement of Flyway Council Meetings

Service representatives will be present at the individual meetings of the four Flyway Councils this July. Although agendas are not yet available, these meetings usually commence at 8 a.m. on the days indicated.

- *Atlantic Flyway Council:* July 18–19, Mystic Hilton, Mystic, CT.
- *Mississippi Flyway Council:* July 25–26, Biddle Hotel and Conference Center, Bloomington, IN.
- *Central Flyway Council:* July 25–26, The Lodge at Sierra Blanca, Ruidoso, NM.
- *Pacific Flyway Council:* July 26, Siena Hotel, Reno, NV.

Review of Public Comments

This supplemental rulemaking describes Flyway Council recommended changes based on the preliminary proposals published in the April 9, 2013, **Federal Register**. We have included only those recommendations requiring either new proposals or substantial modification of the preliminary proposals and do not include recommendations that simply support or oppose preliminary proposals and provide no recommended alternatives. Our responses to some Flyway Council recommendations, but not others, are merely a clarification aid to the reader on the overall regulatory process, not a definitive response to the issue. We will publish responses to all proposals and written comments when we develop final frameworks.

We seek additional information and comments on the recommendations in this supplemental proposed rule. New proposals and modifications to previously described proposals are discussed below. Wherever possible, they are discussed under headings corresponding to the numbered items identified in the April 9 proposed rule. Only those categories requiring your attention or for which we received Flyway Council recommendations are discussed below.

1. Ducks

Duck harvest management categories are: (A) General Harvest Strategy; (B) Regulatory Alternatives, including specification of framework dates, season length, and bag limits; (C) Zones and Split Seasons; and (D) Special Seasons/Species Management.

A. General Harvest Strategy

Council Recommendations: The Mississippi Flyway Council recommended that regulations changes be restricted to one step per year, both when restricting as well as liberalizing hunting regulations.

Service Response: As we stated in the April 9 **Federal Register**, the final AHM protocol for the 2013–14 season will be detailed in the early-season proposed rule, which will be published in mid-July.

B. Regulatory Alternatives

Council Recommendations: The Mississippi and Central Flyway Councils recommended that regulatory alternatives for duck hunting seasons remain the same as those used in 2012–13.

Service Response: As we stated in the April 9 **Federal Register**, the final regulatory alternatives for the 2013–14 season will be detailed in the early-season proposed rule, which will be published in mid-July.

D. Special Seasons/Species Management

i. September Teal Seasons

Council Recommendations: The Atlantic, Mississippi, and Central Flyway Councils recommended that the daily bag limit be increased from 4 to 6 teal in the aggregate during the Special September teal season. The Atlantic Flyway Council also recommended that we allow Maryland to adjust existing shooting hours during the Special September teal season from sunrise to one-half hour before sunrise on an experimental basis during 2013–15 seasons.

vi. Scaup

Council Recommendations: The Central Flyway Council recommended modifying the ''moderate'' regulatory alternative for the States of the Central Flyway from a 74-day season with a 2-bird daily bag limit to a 74-day season with a 3-bird daily bag limit. The Council recommended no changes to the ''restrictive'' and ''liberal'' alternative.

2. Sea Ducks

Council Recommendations: The Atlantic Flyway Council recommended that the Service amend the annual waterfowl hunting regulations at 50 CFR 20.105 to allow the shooting of crippled waterfowl from a motorboat under power in New Jersey, North Carolina, South Carolina, and Georgia in those areas described, delineated, and designated in their respective hunting regulations as special sea duck hunting areas.

4. Canada Geese

A. Special Seasons

Council Recommendations: The Mississippi Flyway Council recommended increasing the daily bag limit in Minnesota from 5 geese to 10 geese during the special September season in certain areas of the State.

B. Regular Seasons

Council Recommendations: The Mississippi Flyway Council recommended that the framework opening date for all species of geese for the regular goose seasons in the Lower Peninsula of Michigan and Wisconsin be September 16, 2013, and in the Upper Peninsula of Michigan be September 11, 2013.

9. Sandhill Cranes

Council Recommendations: The Mississippi Flyway Council recommended implementation of a 3-year experimental 60-day sandhill crane season in Tennessee beginning in the 2013–14 season.

The Central Flyway Council recommended increasing the season length in North Dakota's eastern sandhill crane hunting zone (Area-2) from 37 to 58 days in length.

The Central and Pacific Flyway Councils recommend using the 2013 Rocky Mountain Population (RMP) sandhill crane harvest allocation of 771 birds as proposed in the allocation formula using the 3-year running average for 2010–12.

16. Mourning Doves

Council Recommendations: The Atlantic and Mississippi Flyway Councils recommended use of the ''moderate'' season framework for States within the Eastern Management Unit population of mourning doves resulting in a 70-day season and 15-bird daily bag limit. The daily bag limit could be composed of mourning doves and white-winged doves, singly or in combination.

The Mississippi and Central Flyway Councils recommend the use of the standard (or ''moderate'') season package of a 15-bird daily bag limit and a 70-day season for the 2013–14 mourning dove season in the States

within the Central Management Unit. They also recommended that the Special White-winged Dove Area be expanded to Interstate Highway 37 in the 2013–14 season.

The Pacific Flyway Council recommended use of the ''moderate'' season framework for States in the Western Management Unit (WMU) population of doves, which represents no change from last year's frameworks.

The Atlantic, Mississippi, Central, and Pacific Flyway Councils also recommended that the present interim mourning dove harvest strategy be replaced by a new national mourning dove harvest strategy for implementation beginning with the 2014–15 season. The new strategy uses a discrete logistic growth model based on information derived from the banding program, the Harvest Information Program, and the mourning dove parts collection survey to predict mourning dove population size in a Bayesian statistical framework. The method is similar to other migratory bird strategies already in place and performs better than several other modeling strategies that were evaluated by the National Mourning Dove Task Force. The strategy uses mourning dove population thresholds to determine a regulation package for mourning doves for each year.

23. Other

Council Recommendations: The Atlantic Flyway Council recommended increasing the possession limits for sora and Virginia rails from 2 to 3 times the aggregate daily bag limit, consistent with the Council's proposed bag limits for all other migratory game birds during normal established hunting seasons.

The Atlantic, Mississippi, Central, and Pacific Flyway Councils recommended increasing the possession limit from 2 to 3 times the daily bag limit for doves.

The Pacific Flyway Councils recommended increasing the possession limit from 2 to 3 times the daily bag limit for band-tailed pigeons, special September Canada goose seasons, snipe, falconry, and Alaska seasons for brant, sandhill cranes, and geese (except dusky Canada geese).

The Mississippi Flyway Council recommended that the Service increase the possession limit from 2 times to 3 times the daily bag limit for all migratory game bird species and seasons except for Canada geese or other overabundant species for which no current possession limits are currently assigned (e.g., light geese), where there would continue to be no possession limits. The Council also recommended no change for those species that currently have permit hunts (e.g., cranes and swans). The Council recommends these changes be implemented beginning in the 2013–14 season. New and/or experimental seasons could have different possession limits if justified. The Council further recommended that possession limits not apply at one's personal permanent residence and specifically recommended language to modify 50 CFR 20.39 to do so.

Service Response: The issue of possession limits was first raised by the Flyway Councils in the summer of 2010. At that time, we stated that we were generally supportive of the Flyways' interest in increasing the possession limits for migratory game birds and appreciated the discussions to frame this important issue (75 FR 58250; September 23, 2010). We also stated that we believed there were many unanswered questions regarding how this interest could be fully articulated in a proposal that satisfies the harvest management community, while fostering the support of the law enforcement community and informing the general hunting public. Thus, we proposed the creation of a cross-agency Working Group, chaired by the Service, and comprised of staff from the Service's Migratory Bird Program, State Wildlife Agency representatives, and Federal and State law enforcement staff, to develop a recommendation that fully articulates a potential change in possession limits. This effort would include a discussion of the current status and use of possession limits, which populations and/or species/species groups should not be included in any proposed modification of possession limits, potential law enforcement issues, and a reasonable timeline for the implementation of any such proposed changes.

After discussions last year at the January SRC meeting, and March and July Flyway Council meetings, the Atlantic, Central, and Pacific Flyway Councils recommended that the Service increase the possession limit from 2 times to 3 times the daily bag limit for all migratory game bird species and seasons except for those species that currently have possession limits of less than 2 times the daily bag limit (e.g., some rail species), permit hunts (e.g., cranes and swans), and for overabundant species for which no current possession limits are assigned (e.g., light geese), beginning in the 2013–14 season (77 FR 58444; September 20, 2012). These recommendations from the Councils are one such outgrowth of the efforts started in 2010. With the new recommendation from the Mississippi Flyway Council and the additional input and recommendations from all four Flyway Councils from their March 2013 Council meetings, we plan to prepare a proposal for the SRC's consideration and discussion at the June 19–20 SRC meeting for the 2013–14 hunting seasons.

Additionally, as we discussed in the April 9 proposed rule (78 FR 21200), when our initial review of possession limits was instituted in 2010, we also realized that a review of possession limits could not be adequately conducted without expanding the initial review to include other possession-related regulations. In particular, it was our belief that any potential increase in the possession limits should be done in concert with a review and update of the wanton waste regulations in 50 CFR 20.25. We believed it prudent to review some of the long-standing sources of confusion (for both hunters and law enforcement) regarding wanton waste. A review of the current Federal wanton waste regulations, along with various State wanton waste regulations, has been recently completed, and we anticipate publishing a proposed rule this summer to revise 50 CFR 20.25.

Lastly, we recognize that there are other important issues surrounding possession that need to be reviewed, such as termination of possession (as recommended by the Mississippi Flyway Council). However, that issue is a much larger and more complex review than the wanton waste regulations and the possession limit regulations. We anticipate starting a review of termination of possession regulations upon completion of changes to the wanton waste and possession limits regulations.

Public Comments

The Department of the Interior's policy is, whenever practicable, to afford the public an opportunity to participate in the rulemaking process. Accordingly, we invite interested persons to submit written comments, suggestions, or recommendations regarding the proposed regulations. Before promulgation of final migratory game bird hunting regulations, we will take into consideration all comments we receive. Such comments, and any additional information we receive, may lead to final regulations that differ from these proposals.

You may submit your comments and materials concerning this proposed rule by one of the methods listed in the **ADDRESSES** section. We will not accept comments sent by email or fax or to an

address not listed in the **ADDRESSES** section. Finally, we will not consider hand-delivered comments that we do not receive, or mailed comments that are not postmarked, by the date specified in the **DATES** section.

We will post all comments in their entirety—including your personal identifying information—on *http://www.regulations.gov.* Before including your address, phone number, email address, or other personal identifying information in your comment, you should be aware that your entire comment—including your personal identifying information—may be made publicly available at any time. While you can ask us in your comment to withhold your personal identifying information from public review, we cannot guarantee that we will be able to do so.

Comments and materials we receive, as well as supporting documentation we used in preparing this proposed rule, will be available for public inspection on *http://www.regulations.gov,* or by appointment, during normal business hours, at the U.S. Fish and Wildlife Service, Division of Migratory Bird Management, Room 4107, 4501 North Fairfax Drive, Arlington, VA 22203.

For each series of proposed rulemakings, we will establish specific comment periods. We will consider, but possibly may not respond in detail to, each comment. As in the past, we will summarize all comments we receive during the comment period and respond to them after the closing date in any final rules.

Regulatory Planning and Review (Executive Orders 12866 and 13563)

Executive Order 12866 provides that the Office of Information and Regulatory Affairs (OIRA) will review all significant rules. The Office of Information and Regulatory Affairs has determined that this rule is significant because it will have an annual effect of $100 million or more on the economy.

An economic analysis was prepared for the 2008–09 season. This analysis was based on data from the 2006 National Hunting and Fishing Survey. This analysis estimated consumer surplus for three alternatives for duck hunting (estimates for other species are not quantified due to lack of data). The alternatives are (1) Issue restrictive regulations allowing fewer days than those issued during the 2007–08 season, (2) Issue moderate regulations allowing more days than those in alternative 1, and (3) Issue liberal regulations identical to the regulations in the 2007–08 season. For the 2008–09 season, we chose alternative 3, with an estimated consumer surplus across all flyways of $205–$270 million. We also chose alternative 3 for the 2009–10, the 2010–11, the 2011–12, and the 2012–13 seasons. At this time, we are proposing no changes to the season frameworks for the 2013–14 season, and as such, we will again consider these three alternatives. However, final frameworks will be dependent on population status information available later this year.

Recently, new economic data from the 2011 National Hunting and Fishing Survey has become available. As such, we are currently updating our previous economic analysis and plan to have it available for public review and comment later this summer. Until such time as our new analysis is available, we will continue to make the 2008–09 analysis available at *http://www.fws.gov/migratorybirds/NewReportsPublications/SpecialTopics/SpecialTopics.html#HuntingRegs* or at *http://www.regulations.gov* at Docket No. FWS–HQ–MB–2013–0057.

Executive Order 13563 reaffirms the principles of E.O. 12866 while calling for improvements in the nation's regulatory system to promote predictability, to reduce uncertainty, and to use the best, most innovative, and least burdensome tools for achieving regulatory ends. The executive order directs agencies to consider regulatory approaches that reduce burdens and maintain flexibility and freedom of choice for the public where these approaches are relevant, feasible, and consistent with regulatory objectives. E.O. 13563 emphasizes further that regulations must be based on the best available science and that the rulemaking process must allow for public participation and an open exchange of ideas. We have developed this rule in a manner consistent with these requirements.

Other Required Determinations

Based on our most current data, we are affirming our required determinations made in the proposed rule; for descriptions of our actions to ensure compliance with the following statutes and Executive orders, see our April 9, 2013, proposed rule (78 FR 21200):

- National Environmental Policy Act;
- Endangered Species Act;
- Regulatory Flexibility Act;
- Small Business Regulatory Enforcement Fairness Act;
- Paperwork Reduction Act;
- Unfunded Mandates Reform Act;
- Executive Orders 12630, 12988, 13175, 13132, and 13211.

List of Subjects in 50 CFR Part 20

Exports, Hunting, Imports, Reporting and recordkeeping requirements, Transportation, Wildlife.

Authority

The rules that eventually will be promulgated for the 2013–14 hunting season are authorized under 16 U.S.C. 703–711, 16 U.S.C. 712, and 16 U.S.C. 742 a–j.

Dated: June 3, 2013.

Rachel Jacobson,

Principal Deputy Assistant Secretary for Fish and Wildlife and Parks.

[FR Doc. 2013–14070 Filed 6–13–13; 8:45 am]

BILLING CODE 4310–55–P

Notices

Federal Register

Vol. 78, No. 115

Friday, June 14, 2013

This section of the FEDERAL REGISTER contains documents other than rules or proposed rules that are applicable to the public. Notices of hearings and investigations, committee meetings, agency decisions and rulings, delegations of authority, filing of petitions and applications and agency statements of organization and functions are examples of documents appearing in this section.

DEPARTMENT OF AGRICULTURE

Submission for OMB Review; Comment Request

June 10, 2013.

The Department of Agriculture has submitted the following information collection requirement(s) to Office of Management and Budget (OMB) for review and clearance under the Paperwork Reduction Act of 1995, Public Law 104–13. Comments regarding (a) whether the collection of information is necessary for the proper performance of the functions of the agency, including whether the information will have practical utility; (b) the accuracy of the agency's estimate of burden including the validity of the methodology and assumptions used; (c) ways to enhance the quality, utility and clarity of the information to be collected; (d) ways to minimize the burden of the collection of information on those who are to respond, including through the use of appropriate automated, electronic, mechanical, or other technological collection techniques or other forms of information technology should be addressed to: Desk Officer for Agriculture, Office of Information and Regulatory Affairs, Office of Management and Budget, New Executive Office Building, 725—17th Street NW., Washington, DC 20502. Commenters are encouraged to submit their comments to OMB via email to: *OIRA_Submission@OMB.EOP.GOV* or fax (202) 395–5806 and to Departmental Clearance Office, USDA, OCIO, Mail Stop 7602, Washington, DC 20250–7602. Comments regarding these information collections are best assured of having their full effect if received within 30 days of this notification. Copies of the submission(s) may be obtained by calling (202) 720–8681.

An agency may not conduct or sponsor a collection of information unless the collection of information displays a currently valid OMB control number and the agency informs potential persons who are to respond to the collection of information that such persons are not required to respond to the collection of information unless it displays a currently valid OMB control number.

Rural Utilities Service

Title: Environmental Policies and Procedures (7 CFR Part 1794).

OMB Control Number: 0572–0117.

Summary of Collection: In December 1998, the Rural Utilities Service (RUS) published its revised Environmental Policies and Procedures and in 2003 revisions were made to clarify policy on certain environmental review processes. The rule promulgated environmental regulations that cover all RUS Federal actions taken by RUS' electric, telecommunications, water and environmental programs. The regulation was necessary to ensure continued RUS compliance with the Council on Environmental Quality (CEQ) Regulations for Implementing the Procedural Provisions of the National Environmental Policy Act (NEPA) (40 CFR Parts 1500–1508), and certain related Federal environmental laws, statutes, regulations, and Executive Orders. RUS electric, telecommunications, water and environmental program borrowers provide environmental documentation to assure that policy contained in NEPA is followed.

Need and Use of the Information: Agency applicants provide environmental documentation, as prescribed by the rule, to assure that policy contained in NEPA is followed. RUS will collect information to evaluate the cost and feasibility of the proposed project and the environmental impact. If the information is not collected, the agency would not be in compliance with NEPA and CEQ regulations.

Description of Respondents: Non-for-profit institutions; Business or other for-profit.

Number of Respondents: 1,339.

Frequency of Responses: Reporting: On occasion.

Total Burden Hours: 486,440.

Rural Utility Service

Title: Water and Waste Disposal Programs Guaranteed Loans.

OMB Control Number: 0572–0122.

Summary of Collection: The Rural Utilities Service (RUS) is authorized by Section 306 of the Consolidated Farm and Rural Development Act (7 U.S.C. 1926) to make loans to public agencies, nonprofit corporations, and Indian tribes for the development of water and waste disposal facilities primarily servicing rural residents. The Waste and Water Disposal Programs (WW) of RUS provide insured loan and grant funds through the WW program to finance many types of projects varying in size and complexity. The Waste and Water Disposal Guaranteed Program is implemented through 7 CFR 1779. The guaranteed loan program encourages lender participation and provides specific guidance in the processing and servicing of guaranteed WW loans.

Need and Use of the Information: Rural Development's field offices will collect information from applicants/borrowers, lenders, and consultants to determine eligibility, project feasibility and to ensure borrowers operate on a sound basis and use loan funds for authorized purposes. There are agency forms required as well as other requirements that involve certifications from the borrower, lenders, and other parties. Failure to collect proper information could result in improper determinations of eligibility, improper use of funds and or unsound loans.

Description of Respondents: Business or other for-profit; Not-for-profit institutions; State, Local or Tribal Government.

Number of Respondents: 15.

Frequency of Responses: Reporting: On occasion.

Total Burden Hours: 858.

Charlene Parker,

Departmental Information Collection Clearance Officer.

[FR Doc. 2013–14094 Filed 6–13–13; 8:45 am]

BILLING CODE 3410–15–P

DEPARTMENT OF AGRICULTURE

Submission for OMB Review; Comment Request

June 10, 2013.

The Department of Agriculture has submitted the following information collection requirement(s) to OMB for review and clearance under the Paperwork Reduction Act of 1995, Public Law 104–13. Comments regarding (a) whether the collection of information is necessary for the proper

performance of the functions of the agency, including whether the information will have practical utility; (b) the accuracy of the agency's estimate of burden including the validity of the methodology and assumptions used; (c) ways to enhance the quality, utility and clarity of the information to be collected; (d) ways to minimize the burden of the collection of information on those who are to respond, including through the use of appropriate automated, electronic, mechanical, or other technological collection techniques or other forms of information technology should be addressed to: Desk Officer for Agriculture, Office of Information and Regulatory Affairs, Office of Management and Budget (OMB), New Executive Office Building, 725—17th Street NW., Washington, DC 20502. Commenters are encouraged to submit their comments to OMB via email to: *OIRA_Submission@omb.eop.gov* or fax (202) 395–5806 and to Departmental Clearance Office, USDA, OCIO, Mail Stop 7602, Washington, DC 20250–7602. Comments regarding these information collections are best assured of having their full effect if received by July 15, 2013. Copies of the submission(s) may be obtained by calling (202) 720–8681.

An agency may not conduct or sponsor a collection of information unless the collection of information displays a currently valid OMB control number and the agency informs potential persons who are to respond to the collection of information that such persons are not required to respond to the collection of information unless it displays a currently valid OMB control number.

Rural Housing Service

Title: 7 CFR 1942–A, Community Facility Loans.

OMB Control Number: 0575–0015.

Summary Of Collection: The Rural Housing Service (RHS) is a credit agency within the Rural Development mission area of the U.S. Department of Agriculture. The Community Programs Division of the RHS administers the Community Facilities program under 7 CFR Part 1942, Subpart A. The Rural Utilities Service also services outstanding Water and Waste loans under 7 CFR Part 1942, Subpart A. Rural Development provides loan and grant funds through the Community Facilities program to finance many types of projects varying in size and complexity, from large general hospitals to small fire trucks. The facilities financed are designed to promote the development of rural communities by providing the infrastructure necessary to attract residents and rural jobs. RHS will collect information using several forms.

Need and Use of the Information: RHS will collect information to determine applicant/borrower eligibility, project feasibility, and to ensure borrowers operate on a sound basis and use loan and grant funds for authorized purposes. Failure to collect proper information could result in improper determinations of eligibility, improper use of funds, and/or unsound loans.

Description of Respondents: Not-for-profit institutions; State, Local or Tribal Government.

Number of Respondents: 3,231.

Frequency of Responses: Recordkeeping; Reporting: On occasion; Annually

Total Burden Hours: 56,943.

Rural Housing Service

Title: 7 CFR 3575–A, Community Programs Guaranteed Loans.

OMB Control Number: 0575–0137.

Summary of Collection: The Rural Housing Service (RHS) is authorized by Section 306 of the Consolidated Farm and Rural Development Act (7 U.S.C. 1926) to make loans to public agencies, nonprofit corporations, and Indian tribes for the development of essential community facilities primarily serving rural residents. The Community Facilities Division of the RHS is considered Community Programs under the 7 CFR, part 3575, subpart A. Implementation of the Community Programs guaranteed loan program was affected to comply with the Appropriations Act of 1990 when Congress allocated funds for this authority. The guaranteed loan program encourages lender participation and provides specific guidance in the processing and servicing of guaranteed Community Facilities loans. RHS will collect information in a written format and using several forms.

Need and Use of the Information: RHS will collect information to determine applicant/borrower eligibility, project feasibility, and to ensure borrowers operate on a sound basis and use loan funds for authorized purposes. Failure to collect proper information could result in improper determination of eligibility, improper use of funds, and/or unsound loans.

Description of Respondents: Not-for-profit institutions; State, Local or Tribal Government.

Number of Respondents: 146,250.

Frequency of Responses: Reporting: Quarterly; Annually.

Total Burden Hours: 156,463.

Rural Housing Service

Title: USDA Rural Development—Centralized Servicing Center—Loan Servicing Satisfaction Survey.

OMB Control Number: 0575–0187.

Summary of Collection: The Rural Housing Service (RHS) provides insured loans to low and moderate-income applicants located in rural geographic areas to assist them in obtaining decent, sanitary and safe dwellings. RHS Centralized Servicing Center (CSC) has been in operation since October 1996. The CSC was established to achieve a high level of customer service and operating efficiency that provides its borrowers with convenient access to their loan account information. RHS has developed a survey to measure the results and overall effectiveness of customer services provided.

Need and Use of the Information: RHS will use the outcome of the Customer Satisfaction Survey to determine the general satisfaction level among its customers throughout the nation, highlight areas that need improvement and provide a benchmark for future surveys and improvement in customer service. The survey is administered as part of CSC's on going service quality improvement program.

Description of Respondents: Individual or households.

Number of Respondents: 6,000.

Frequency of Responses: Reporting: On occasion.

Total Burden Hours: 960.

Charlene Parker,

Departmental Information Collection Clearance Officer.

[FR Doc. 2013–14098 Filed 6–13–13; 8:45 am]

BILLING CODE 3410–XV–P

DEPARTMENT OF AGRICULTURE

Submission for OMB Review; Comment Request

June 10, 2013.

The Department of Agriculture has submitted the following information collection requirement(s) to OMB for review and clearance under the Paperwork Reduction Act of 1995, Public Law 104–13. Comments regarding (a) Whether the collection of information is necessary for the proper performance of the functions of the agency, including whether the information will have practical utility; (b) the accuracy of the agency's estimate of burden including the validity of the methodology and assumptions used; (c) ways to enhance the quality, utility and clarity of the information to be collected; (d) ways to minimize the

burden of the collection of information on those who are to respond, including through the use of appropriate automated, electronic, mechanical or other technological collection techniques or other forms of information technology.

Comments regarding this information collection received by July 15, 2013 will be considered. Written comments should be addressed to: Desk Officer for Agriculture, Office of Information and Regulatory Affairs, Office of Management and Budget (OMB), New Executive Office Building, 725—17th Street NW., Washington, DC, 20503. Commenters are encouraged to submit their comments to OMB via email to: *OIRA_Submission@omb.eop.gov* or fax (202) 395–5806 and to Departmental Clearance Office, USDA, OCIO, Mail Stop 7602, Washington, DC 20250–7602. Copies of the submission(s) may be obtained by calling (202) 720–8681.

An agency may not conduct or sponsor a collection of information unless the collection of information displays a currently valid OMB control number and the agency informs potential persons who are to respond to the collection of information that such persons are not required to respond to the collection of information unless it displays a currently valid OMB control number.

National Agricultural Statistics Service

Title: Fruits, Nut, and Specialty Crops.

OMB Control Number: 0535–0039.

Summary of Collection: The primary function of the National Agricultural Statistics Service (NASS) is to prepare and issue current official state and national estimates of crop and livestock production. Estimates of fruit, tree nuts, and specialty crops are an integral part of this program. These estimates support the NASS strategic plan to cover all agricultural cash receipts. The authority to collect these data activities is granted under U.S. Code title 7, Section 2204. Information is collected on a voluntary basis from growers, processors, and handlers through surveys.

Need and Use of the Information: Data reported on fruit, nut, specialty crops and Hawaii tropical crops are used by NASS to estimate acreage, yield, production, utilization, and crop value in States with significant commercial production. These estimates are essential to farmers, processors, and handlers in making production and marketing decisions. Estimates from these inquiries are used by market order administrators in their determination of expected supplies of crop under federal and state market orders as well as competitive fruits and nuts.

Description of Respondents: Farms; Business or other for-profit.

Number of Respondents: 68,400.

Frequency of Responses: Reporting: On occasion; Annually; Quarterly; Semi-annually; Monthly.

Total Burden Hours: 18,358.

Charlene Parker,

Departmental Information Collection Clearance Officer.

[FR Doc. 2013–14099 Filed 6–13–13; 8:45 am]

BILLING CODE 3410–20–P

DEPARTMENT OF AGRICULTURE

Submission for OMB Review; Comment Request

June 10, 2013.

The Department of Agriculture has submitted the following information collection requirement(s) to OMB for review and clearance under the Paperwork Reduction Act of 1995, Public Law 104–13. Comments regarding (a) Whether the collection of information is necessary for the proper performance of the functions of the agency, including whether the information will have practical utility; (b) the accuracy of the agency's estimate of burden including the validity of the methodology and assumptions used; (c) ways to enhance the quality, utility and clarity of the information to be collected; (d) ways to minimize the burden of the collection of information on those who are to respond, including through the use of appropriate automated, electronic, mechanical, or other technological collection techniques or other forms of information technology should be addressed to: Desk Officer for Agriculture, Office of Information and Regulatory Affairs, Office of Management and Budget (OMB), *OIRA_Submission@OMB.EOP.GOV* or fax (202) 395–5806 and to Departmental Clearance Office, USDA, OCIO, Mail Stop 7602, Washington, DC 20250–7602. Comments regarding these information collections are best assured of having their full effect if received within 30 days of this notification. Copies of the submission(s) may be obtained by calling (202) 720–8958.

An agency may not conduct or sponsor a collection of information unless the collection of information displays a currently valid OMB control number and the agency informs potential persons who are to respond to the collection of information that such persons are not required to respond to the collection of information unless it displays a currently valid OMB control number.

Food and Nutrition Service

Title: Child and Adult Care Food Program; National Disqualified List 7 CFR Part 226.6(c)(7).

OMB Control Number: 0584–NEW.

Summary of Collection: Section 17 of the National School Lunch Act, as amended (42 U.S.C. 1766), authorizes the Child and Adult Care Food Program (CACFP). Section 243(c) of the Public Law 106–224, the Agricultural Risk Protection Act of 2000, amended section 17(d)(5) of the Richard B. National School Lunch Act (NSLA) (42 U.S.C. 1766(d)(5)(E)(i) and (ii) by requiring the Department of Agriculture, Food and Nutrition Service (FNS) to maintain a list of institutions, day care home providers, and individuals that have been terminated or otherwise disqualified from CACFP participation. These federal requirements affect eligibility under the CACFP.

Need and Use of the Information: FNS will collect information using forms FNS 843, ''Report of Disqualification from Participation—Institution and Responsible Principals/Individuals'' and FNS 844, ''Report of Disqualification from Participation—Individually Disqualified Responsible Principal/Individual or Day Care Home Provider.'' The data collected will be used to collect and maintain information on all individuals and institutions that have been disqualified and are therefore ineligible to participate in CACFP. Without this data collection, State agencies and sponsoring organizations would have no way of knowing if an applicant has been disqualified from participating in CACFP in another State.

Description of Respondents: State, Local, or Tribal Government.

Number of Respondents: 56.

Frequency of Responses: Report: On occasion; Other (as needed).

Total Burden Hours: 784.

Ruth Brown,

Departmental Information Collection Clearance Officer.

[FR Doc. 2013–14100 Filed 6–13–13; 8:45 am]

BILLING CODE 3410–30–P

DEPARTMENT OF COMMERCE

National Oceanic and Atmospheric Administration

RIN 0648–XC564

Takes of Marine Mammals Incidental to Specified Activities; Taking Marine Mammals Incidental to Marine Seismic Survey in the Beaufort Sea, Alaska

AGENCY: National Marine Fisheries Service (NMFS), National Oceanic and Atmospheric Administration (NOAA), Commerce.

ACTION: Notice; proposed incidental harassment authorization; request for comments.

SUMMARY: NMFS received an application from SAExploration, Inc. (SAE) for an Incidental Harassment Authorization (IHA) to take marine mammals, by harassment only, incidental to a marine 3-dimensional (3D) ocean bottom cable (OBC) seismic surveys program in the state and federal waters of the Beaufort Sea, Alaska, during the open water season of 2013. Pursuant to the Marine Mammal Protection Act (MMPA), NMFS is requesting comments on its proposal to issue an IHA to SAE to take, by Level B harassment, nine species of marine mammals during the specified activity.

DATES: Comments and information must be received no later than July 15, 2013.

ADDRESSES: Comments on the application should be addressed to P. Michael Payne, Chief, Permits and Conservation Division, Office of Protected Resources, National Marine Fisheries Service, 1315 East-West Highway, Silver Spring, MD 20910. The mailbox address for providing email comments is *ITP.guan@noaa.gov.* NMFS is not responsible for email comments sent to addresses other than the one provided here. Comments sent via email, including all attachments, must not exceed a 10-megabyte file size.

Instructions: All comments received are a part of the public record and will generally be posted to *http://www.nmfs.noaa.gov/pr/permits/incidental.htm#applications* without change. All Personal Identifying Information (for example, name, address, etc.) voluntarily submitted by the commenter may be publicly accessible. Do not submit Confidential Business Information or otherwise sensitive or protected information.

The application used in this document may be obtained by visiting the internet at: *http://www.nmfs.noaa.gov/pr/permits/incidental.htm#applications.* Documents cited in this notice may also be viewed, by appointment, during regular business hours, at the aforementioned address.

FOR FURTHER INFORMATION CONTACT: Shane Guan, Office of Protected Resources, NMFS, (301) 427–8401.

SUPPLEMENTARY INFORMATION:

Background

Sections 101(a)(5)(A) and (D) of the MMPA (16 U.S.C. 1361 *et seq.*) direct the Secretary of Commerce to allow, upon request, the incidental, but not intentional, taking of small numbers of marine mammals by U.S. citizens who engage in a specified activity (other than commercial fishing) within a specified geographical region if certain findings are made and either regulations are issued or, if the taking is limited to harassment, a notice of a proposed authorization is provided to the public for review.

Authorization for incidental takings shall be granted if NMFS finds that the taking will have a negligible impact on the species or stock(s), will not have an unmitigable adverse impact on the availability of the species or stock(s) for subsistence uses (where relevant), and if the permissible methods of taking and requirements pertaining to the mitigation, monitoring and reporting of such takings are set forth. NMFS has defined ''negligible impact'' in 50 CFR 216.103 as ''. . . an impact resulting from the specified activity that cannot be reasonably expected to, and is not reasonably likely to, adversely affect the species or stock through effects on annual rates of recruitment or survival.''

Section 101(a)(5)(D) of the MMPA established an expedited process by which citizens of the U.S. can apply for an authorization to incidentally take small numbers of marine mammals by harassment. Section 101(a)(5)(D) establishes a 45-day time limit for NMFS review of an application followed by a 30-day public notice and comment period on any proposed authorizations for the incidental harassment of marine mammals. Within 45 days of the close of the comment period, NMFS must either issue or deny the authorization.

Except with respect to certain activities not pertinent here, the MMPA defines ''harassment'' as: any act of pursuit, torment, or annoyance which (i) has the potential to injure a marine mammal or marine mammal stock in the wild [''Level A harassment'']; or (ii) has the potential to disturb a marine mammal or marine mammal stock in the wild by causing disruption of behavioral patterns, including, but not limited to, migration, breathing, nursing, breeding, feeding, or sheltering [''Level B harassment''].

Summary of Request

On December 12, 2012, NMFS received an application from SAE requesting an authorization for the harassment of small numbers of marine mammals incidental to conducting an open water 3D OBC seismic survey in the Beaufort Sea off Alaska. After addressing comments from NMFS, SAE modified its application and submitted a revised application on April 14, 2013. SAE's proposed activities discussed here are based on its April 14, 2013, IHA application.

Description of the Specified Activity

The planned 3D seismic survey would occur in the nearshore waters of the Colville River Delta in the Alaskan Beaufort Sea (Figure 1–1 of SAE's IHA application). The components of the project include laying nodal recording sensors (nodes) on the ocean floor, operating seismic source vessels towing active airgun arrays, and retrieval of nodes. There will also be additional boat activity associated with crew transfer, recording support, and additional monitoring for marine mammals.

A total of 210 nodal (receiver) lines will be laid perpendicular from the shoreline spaced 200 to 268 m (660 to 880 ft) apart. Receiver line lengths range between 20 and 32 km (13 and 20 mi) long. The total receiver area is 1,225 km^2 (473 mi^2). Sixty-five source (shot) transect lines will run perpendicular to the receiver nodal lines, each spaced 300 to 335 m (990 to 1,100 ft) apart. These lines will be approximately 51 km (32 mi) long. The total source survey area is 995 km^2 (384 mi^2).

The receiver layout and seismic survey data will be acquired using the stroke technique—multiple strokes with 6 receiver lines per stroke. Source lines will be acquired perpendicular to the receiver lines for each stroke, only 6 receiver lines will be laid at a time, with enough associated source survey to fully acquisition data for that stroke. Once data is acquired for a given stroke, the nodal lines (strings of individual nodes tethered together by rope) will be retrieved and repositioned into a second 6 line stroke, and the seismic survey operations begin anew. This will allow the most rapid acquisition of data using the minimum number of active nodes.

Acoustical Sources

The acoustic sources of primary concern are the airguns that will be deployed from the seismic source

vessels. However, there are other noise sources to be addressed including the pingers and transponders associated with locating receiver nodes, as well as propeller noise from the vessel fleet.

The seismic sources to be used will include using 880 and 1,760 cubic inch (in^3) sleeve airgun arrays for use in the deeper waters, and a 440 in^3 array in the very shallow (<1.5 m) water locations. The arrays will be towed approximately 15 to 22 m (50 to 75 ft) behind the source vessel stern, at a depth of 4 m (12 ft), and towed along predetermined source lines at speeds between 4 and 5 knots. Two vessels with full arrays will be operating simultaneously in an alternating shot mode; one vessel shooting while the other is recharging. Shot intervals are expected to be about 8 to 10 seconds for each array resulting in an overall shot interval of 4 to 5 seconds considering the two arrays. Operations are expected to occur 24 hours a day.

Based on the manufacturer's specifications, the 440 in^3 array has a peak-peak estimated 1-meter sound source of 239.1 dB re 1 μPa, and root mean square (rms) at 221.1 dB re 1 μPa. The 880 in^3 array produces sound levels at source estimated at peak-peak 244.86 dB re 1 μPa @ 1 m, and rms at 226.86 dB re 1 μPa. The 1,760 in^3 array has a peak-peak estimated sound source of 254.55 dB re 1 μPa @ 1 m, with an rms sound source of 236.55 dB re 1 μPa. The 1,760 in^3 array has a sound source level approximately 10 dB higher than the 880 in^3 array.

Pingers and Transponders

An acoustical pinger system will be used to position and interpolate the location of the nodes. Pingers will be positioned at predetermined intervals throughout the shoot patch and signals transmitted by the pingers will be received by a transponder mounted on a recording and retrieving vessel. The pingers and transponder communicate via sonar and, therefore, each generates underwater sounds potentially disturbing to marine mammals. The exact model of pinger system to be used is yet to be determined, but available pingers transmit short pulses at between 19 to 55 kHz and have published source levels between 185 and 193 dB (rms) re 1 μPa @ 1 m. Available transponders generally transmit at between 7 and 50 kHz, with similar source levels also between 185 and 193 dB re 1 μPa @ 1 m. Aerts *et al.* (2008) measured the sound source signature of the same pingers and transponders to be used in this survey and found the pinger to have a source level of 185 dB re 1 μPa and the transponder at 193 dB re 1 μPa.

Both the pingers and the transponders produce noise levels within the most sensitive hearing range of seals (10 to 30 kHz; Schusterman 1981) and beluga whales (12 to ~100 kHz; Wartzok and Ketten 1999), and the functional hearing range of baleen whales (20 Hz to 30 kHz; NRC 2003), although baleen whale hearing is probably most sensitive nearer 1 kHz (Richardson *et al.* 1995). However, given the low acoustical output, the range of acoustical harassment to marine mammals is between about 24 to 61 m (80 and 200 ft), or significantly less than the output from the airgun arrays (see below).

Vessels

Several offshore vessels will be required to support recording, shooting, and housing in the marine and transition zone environments. The exact vessels that will be used have not yet been determined. However, the types of vessels that will be used to fulfill these roles are listed in Table 1.

Source Vessels—Source vessels will have the ability to deploy two arrays off the stern using large A-frames and winches and have a draft shallow enough to operate in waters less than 1.5 m (5 ft) deep. On the source vessels the airgun arrays are typically mounted on the stern deck with an umbilical that allow the arrays to be deployed and towed from the stern without having to re-rig or move arrays. A large bow deck will allow for sufficient space for source compressors and additional airgun equipment to be stored. The two marine vessels likely to be used are the *Peregrine* and *Miss Diane.* Both were acoustically measured by Aerts *et al.* (2008). The *Peregrine* was found to have a source level of 179.0 dB re 1 μPa, while the smaller *Miss Diane* has a source level of 165.7 dB re 1 μPa.

TABLE 1—VESSELS TO BE USED DURING SAE'S 3D OBC SEISMIC SURVEYS

Vessel	Size (ft)	Activity and frequency	Source level (dB)
Source vessel 1	120 x 25	Seismic data acquisition; 24 hr operation	179
Source vessel 2	80 x 25	Seismic data acquisition; 24 hr operation	166
Node equipment vessel 1	80 x 20	Deploying and retrieving nodes; 24 hr operation	165
Node equipment vessel 2	80 x 20	Deploying and retrieving nodes; 24 hr operation	165
Mitigation/housing vessel	90 x 20	House crew; 24 hr operation	200
Crew transport vessel	30 x 20	Transport crew; intermittent 8 hrs	192
Bow picker 1	30 x 20	Deploying & retrieving nodes; intermittent operation	172
Bow picker 2	30 x 20	Deploying & retrieving nodes; intermittent operation	172

Recording Deployment and Retrieval—Jet driven shallow draft vessels and bow pickers will be used for the deployment and retrieval of the offshore recording equipment. These vessels will be rigged with hydraulically driven deployment and retrieval squirters allowing for automated deployment and retrieval from the bow or stern of the vessel. These vessels will also carry the recording equipment on the deck in fish totes. Aerts *et al.* (2008) found the recording and deployment vessels to have a source level of approximately 165.3 dB re 1 μPa, while the smaller bow pickers produce more cavitation resulting in source levels of 171.8 dB re 1 μPa.

Housing and Transfer Vessels—Housing vessel(s) will be larger with sufficient berthing to house crews and management. The housing vessel will have ample office and bridge space to facilitate the role as the mother ship and central operations. Crew transfer vessels will be sufficiently large to safely transfer crew between vessels as needed. Aerts *et al.* (2008) found the housing vessel to produce the loudest propeller noise of all the vessels in the fleet (200.1 dB re 1 μPa), but this vessel is mostly anchored up once it gets on site. The crew transfer vessel also travels only infrequently relative to other vessels, and is usually operated at different speeds. During higher speed runs the vessel produces source noise levels of about 191.8 dB re 1 μPa, while during slower on-site movements the vessel source levels are only 166.4 dB re 1 μPa (Aerts *et al.* 2008).

Mitigation Vessel—To facilitate marine mammal monitoring of the Level B harassment zone, one dedicated vessel will be deployed a few kilometers northeast of the active seismic source vessels to provide a survey platform for 2 or 3 Protected Species Observers (PSOs). These PSOs will work in concert with PSOs stationed aboard the source vessels, and will provide an early warning of the approach of any bowhead whale, beluga, or other marine mammal. It is assumed that the vessel will be of similar size and acoustical signature as a bowpicker.

Acoustic Footprint

SAE used the JASCO model provided in Aerts *et al.* (2008) to predict its source levels for the 880 and 1,760 in^3 airgun array, corrected with the measured or manufacture's source levels. For the 440-in^3 and 880-in^3 arrays, the choices were to either use the radii values already determined by Aerts *et al.* (2008), further choosing between the 50th or 100th percentile values, or applying factory-measured sound source levels to the model. Aerts *et al.* (2008) did not measure the 1,760-in^3 array, so the former choice is not available for this array.

While NMFS and SAE considered using the 100th percentile values generated by Aerts *et al.* (2008) to estimate the airgun array source would have the benefit of being the most protective approach, it was not used because the estimated value from this model is very unlikely to represent the actual source level as the model is based on far-field measurements. In addition, a close examination of the endfire measurements in Figure 3.4 provided by Aerts *et al.* (2008) show that the measured values within 600 m of the source nearly all fall along or below the 50th percentile line, while the 100th percentile is influenced by values between 600 and 1,000 m. Therefore, NMFS believes that the 50th percentile or 230.9 dB is closer to the actual source level of the 880-in^3 airgun array, which was also supported by the 550 m of measurements (between 50 and 600 m) during the BP's sound source verification (SSV) measurements reported by Aerts *et al.* (2008). The modeled source levels of 230.9 dB for the 880-in^3 array is still higher than the manufacture source value for the SeaScan 880-in^3 array (peak to peak 17.5 bar-m, which is roughly equivalent to 226.86 dB rms).

Applying the 230.9 dB modeled source level for the 880 in^3 array to JASCO's modeled propagation equation for the same volume of airgun array,

$$18\ \mathrm{Log}(R) - 0.0047(R)$$

(where R is the range in meter from the source), which was based on BP's SSV measurements (Aerts *et al.* 2008), results in exclusion zone radii of 167 m (190 dB) and 494 m (180 dB).

Similar modeling effects were done on the 440-in^3 array, which results inexclusion zone radii of 126 m (190 dB) and 325 m (180 dB).

However, this approach does not work for establishing safety radii for the 1,760-in^3 array as Aerts *et al.* (2008) did not measure such an array. Using the manufacturer source value of 236.6 dB rms and the JASCO model, $18\ \mathrm{Log}(R) - 0.0047(R)$, yields safety radii of 321 m (190 dB) and 846 m (180 dB).

A similar method was used to calculate the estimated 160 dB radii for the three different volumes of airgun arrays. A summary of airgun array modeled source levels and their respective exclusion zones are listed in Table 2.

TABLE 2—MODELED AIRGUN ARRAY SOURCE LEVELS AND EXCLUSION ZONE AND ZONES OF INFLUENCE RADII

Array size (in^3)	Source level (dB)	190 dB radius (m)	180 dB radius (m)	160 dB radius (m)
440	221.10	126	325	1,330
880	226.86	167	494	1,500
1,760	236.55	321	842	2,990

While the pingers and transponders that will be used to relocate nodes generate sound source levels at approximately 185 to 193 dB re 1 μPa, the associated exclusion zones are estimated at about 0 to 6 m from the source.

Dates and Duration of the Proposed Seismic Survey

SAE's proposed 3D OBC seismic survey is for the 2013 open water season between July 1 and October 15. All associated activities, including mobilization, survey activities, and demobilization of survey and support crews, would occur inclusive of the above dates. The actual data acquisition is expected to take approximately 70 days (July 25 to September 30), dependent of weather. Based on past similar seismic shoots in the Beaufort Sea, it is expected that effective shooting would occur over about 70 percent of the 70 days (or about 1,176 hours). If required in the Conflict Avoidance Agreement (CAA), surveys will temporarily cease during the fall bowhead whale hunt to avoid acoustical interference with the Cross Island, Kaktovik, or Barrow based hunts. Still, seismic surveys will begin in the more offshore areas first with the intention of completing survey of the bowhead whale migration corridor (waters >15 meters deep) region prior to the arrival of the fall migration. It is expected that by September 1, the northernmost 8 to 10 kilometers of the survey box will have been shot, with the remaining area to be surveyed found 5 to 8 kilometers south of the southern edge of the bowhead migration corridor (the 15-meter isobath).

Description of Marine Mammals in the Area of the Specified Activity

The marine mammal species under NMFS jurisdiction most likely to occur in the seismic survey area include five cetacean species, beluga whale (*Delphinapterus leucas*), narwhal (*Monodon monoceros*), bowhead whale (*Balaena mysticetus*), gray whale (*Eschrichtius robustus*), and humpback whale (*Megaptera novaeangliae*), and four pinniped species, ringed (*Phoca hispida*), spotted (*P. largha*), bearded (*Erignathus barbatus*), and ribbon seals (*Histriophoca fasciata*).

The bowhead and humpback whales are listed as ''endangered'', and the ringed and bearded seals are listed as ''threatened'' under the Endangered Species Act (ESA) and as depleted under the MMPA. Certain stocks or populations of gray and beluga whales and spotted seals are also listed under the ESA, however, none of those stocks or populations occur in the proposed activity area.

SAE's application contains information on the status, distribution, seasonal distribution, and abundance of each of the species under NMFS jurisdiction mentioned in this document. Please refer to the application for that information (see

ADDRESSES). Additional information can also be found in the NMFS Stock Assessment Reports (SAR). The Alaska 2012 SAR is available at: *http://www.nmfs.noaa.gov/pr/sars/pdf/ak2012.pdf.*

Potential Effects of the Specified Activity on Marine Mammals

Operating active acoustic sources such as airgun arrays, navigational sonars, and vessel activities have the potential for adverse effects on marine mammals.

Potential Effects of Airgun Sounds on Marine Mammals

The effects of sounds from airgun pulses might include one or more of the following: tolerance, masking of natural sounds, behavioral disturbance, and temporary or permanent hearing impairment or non-auditory effects (Richardson *et al.* 1995). As outlined in previous NMFS documents, the effects of noise on marine mammals are highly variable, and can be categorized as follows (based on Richardson *et al.* 1995):

(1) Behavioral Disturbance

Marine mammals may behaviorally react to sound when exposed to anthropogenic noise. These behavioral reactions are often shown as: changing durations of surfacing and dives, number of blows per surfacing, or moving direction and/or speed; reduced/increased vocal activities; changing/cessation of certain behavioral activities (such as socializing or feeding); visible startle response or aggressive behavior (such as tail/fluke slapping or jaw clapping); avoidance of areas where noise sources are located; and/or flight responses (e.g., pinnipeds flushing into water from haulouts or rookeries).

The biological significance of many of these behavioral disturbances is difficult to predict, especially if the detected disturbances appear minor. However, the consequences of behavioral modification could be expected to be biologically significant if the change affects growth, survival, and reproduction. Some of these potential significant behavioral modifications include:

- Drastic change in diving/surfacing patterns (such as those thought to be causing beaked whale stranding due to exposure to military mid-frequency tactical sonar);
- Habitat abandonment due to loss of desirable acoustic environment; and
- Cease feeding or social interaction.

For example, at the Guerreo Negro Lagoon in Baja California, Mexico, which is one of the important breeding grounds for Pacific gray whales, shipping and dredging associated with a salt works may have induced gray whales to abandon the area through most of the 1960s (Bryant *et al.* 1984). After these activities stopped, the lagoon was reoccupied, first by single whales and later by cow-calf pairs.

The onset of behavioral disturbance from anthropogenic noise depends on both external factors (characteristics of noise sources and their paths) and the receiving animals (hearing, motivation, experience, demography) and is also difficult to predict (Southall *et al.* 2007).

Currently NMFS uses 160 dB re 1 μPa (rms) at received level for impulse noises (such as airgun pulses) as the threshold for the onset of marine mammal behavioral harassment.

In addition, behavioral disturbance is also expressed as the change in vocal activities of animals. For example, there is one recent summary report indicating that calling fin whales distributed in one part of the North Atlantic went silent for an extended period starting soon after the onset of a seismic survey in the area (Clark and Gagnon 2006). It is not clear from that preliminary paper whether the whales ceased calling because of masking, or whether this was a behavioral response not directly involving masking (i.e., important biological signals for marine mammals being ''masked'' by anthropogenic noise; see below). Also, bowhead whales in the Beaufort Sea may decrease their call rates in response to seismic operations, although movement out of the area might also have contributed to the lower call detection rate (Blackwell *et al.* 2009a; 2009b). Some of the changes in marine mammal vocal communication are thought to be used to compensate for acoustic masking resulting from increased anthropogenic noise (see below). For example, blue whales are found to increase call rates when exposed to seismic survey noise in the St. Lawrence Estuary (Di Iorio and Clark 2009). The North Atlantic right whales (*Eubalaena glacialis*) exposed to high shipping noise increase call frequency (Parks *et al.* 2007) and intensity (Parks *et al.* 2010), while some humpback whales respond to low-frequency active sonar playbacks by increasing song length (Miller *el al.* 2000). These behavioral responses could also have adverse effects on marine mammals.

Mysticetes: Baleen whales generally tend to avoid operating airguns, but avoidance radii are quite variable. Whales are often reported to show no overt reactions to airgun pulses at distances beyond a few kilometers, even though the airgun pulses remain well above ambient noise levels out to much longer distances (reviewed in Richardson *et al.* 1995; Gordon *et al.* 2004). However, studies done since the late 1990s of migrating humpback and migrating bowhead whales show reactions, including avoidance, that sometimes extend to greater distances than documented earlier. Therefore, it appears that behavioral disturbance can vary greatly depending on context, and not just received levels alone. Avoidance distances often exceed the distances at which boat-based observers can see whales, so observations from the source vessel can be biased. Observations over broader areas may be needed to determine the range of potential effects of some large-source seismic surveys where effects on cetaceans may extend to considerable distances (Richardson *et al.* 1999; Moore and Angliss 2006). Longer-range observations, when required, can sometimes be obtained via systematic aerial surveys or aircraft-based observations of behavior (e.g., Richardson *et al.* 1986, 1999; Miller *et al.* 1999, 2005; Yazvenko *et al.* 2007a, 2007b) or by use of observers on one or more support vessels operating in coordination with the seismic vessel (e.g., Smultea *et al.* 2004; Johnson *et al.* 2007). However, the presence of other vessels near the source vessel can, at least at times, reduce sightability of cetaceans from the source vessel (Beland *et al.* 2009), thus complicating interpretation of sighting data.

Some baleen whales show considerable tolerance of seismic pulses. However, when the pulses are strong enough, avoidance or other behavioral changes become evident. Because the responses become less obvious with diminishing received sound level, it has been difficult to determine the maximum distance (or minimum received sound level) at which reactions to seismic activity become evident and, hence, how many whales are affected.

Studies of gray, bowhead, and humpback whales have determined that received levels of pulses in the 160–170 dB re 1 μPa (rms) range seem to cause obvious avoidance behavior in a substantial fraction of the animals exposed (McCauley *et al.* 1998, 1999, 2000). In many areas, seismic pulses diminish to these levels at distances ranging from 4–15 km from the source. A substantial proportion of the baleen whales within such distances may show avoidance or other strong disturbance reactions to the operating airgun array. Some extreme examples including migrating bowhead whales avoiding considerably larger distances (20–30 km) and lower received sound levels

(120–130 dB re 1 μPa (rms)) when exposed to airguns from seismic surveys. Also, even in cases where there is no conspicuous avoidance or change in activity upon exposure to sound pulses from distant seismic operations, there are sometimes subtle changes in behavior (e.g., surfacing-respiration-dive cycles) that are only evident through detailed statistical analysis (e.g., Richardson *et al.* 1986; Gailey *et al.* 2007).

Data on short-term reactions by cetaceans to impulsive noises are not necessarily indicative of long-term or biologically significant effects. It is not known whether impulsive sounds affect reproductive rate or distribution and habitat use in subsequent days or years. However, gray whales have continued to migrate annually along the west coast of North America despite intermittent seismic exploration (and much ship traffic) in that area for decades (Appendix A in Malme *et al.* 1984; Richardson *et al.* 1995), and there has been a substantial increase in the population over recent decades (Allen and Angliss 2010). The western Pacific gray whale population did not seem affected by a seismic survey in its feeding ground during a prior year (Johnson *et al.* 2007). Similarly, bowhead whales have continued to travel to the eastern Beaufort Sea each summer despite seismic exploration in their summer and autumn range for many years (Richardson *et al.* 1987), and their numbers have increased notably (Allen and Angliss 2010). Bowheads also have been observed over periods of days or weeks in areas ensonified repeatedly by seismic pulses (Richardson *et al.* 1987; Harris *et al.* 2007). However, it is generally not known whether the same individual bowheads were involved in these repeated observations (within and between years) in strongly ensonified areas.

Odontocete: Relatively little systematic information is available about reactions of toothed whales to airgun pulses. A few studies similar to the more extensive baleen whale/seismic pulse work summarized above have been reported for toothed whales. However, there are recent systematic data on sperm whales (e.g., Gordon *et al.* 2006; Madsen *et al.* 2006; Winsor and Mate 2006; Jochens *et al.* 2008; Miller *et al.* 2009) and beluga whales (e.g., Miller *et al.* 2005). There is also an increasing amount of information about responses of various odontocetes to seismic surveys based on monitoring studies (e.g., Stone 2003; Smultea *et al.* 2004; Moulton and Miller 2005; Holst *et al.* 2006; Stone and Tasker 2006; Potter *et al.* 2007; Hauser *et al.* 2008; Holst and Smultea 2008; Weir 2008; Barkaszi *et al.* 2009; Richardson *et al.* 2009).

Dolphins and porpoises are often seen by observers on active seismic vessels, occasionally at close distances (e.g., bow riding). Marine mammal monitoring data during seismic surveys often show that animal detection rates drop during the firing of seismic airguns, indicating that animals may be avoiding the vicinity of the seismic area (Smultea *et al.* 2004; Holst *et al.* 2006; Hauser *et al.* 2008; Holst and Smultea 2008; Richardson *et al.* 2009). Also, belugas summering in the Canadian Beaufort Sea showed larger-scale avoidance, tending to avoid waters out to 10–20 km from operating seismic vessels (Miller *et al.* 2005). In contrast, recent studies show little evidence of conspicuous reactions by sperm whales to airgun pulses, contrary to earlier indications (e.g., Gordon *et al.* 2006; Stone and Tasker 2006; Winsor and Mate 2006; Jochens *et al.* 2008), except the lower buzz (echolocation signals) rates that were detected during exposure of airgun pulses (Miller *et al.* 2009).

There are almost no specific data on responses of beaked whales to seismic surveys, but it is likely that most if not all species show strong avoidance. There is increasing evidence that some beaked whales may strand after exposure to strong noise from tactical military mid-frequency sonars. Whether they ever do so in response to seismic survey noise is unknown. Northern bottlenose whales seem to continue to call when exposed to pulses from distant seismic vessels.

For delphinids, and possibly the Dall's porpoise, the available data suggest that a ≥170 dB re 1 μPa (rms) disturbance criterion (rather than ≥160 dB) would be appropriate. With a medium-to-large airgun array, received levels typically diminish to 170 dB within 1–4 km, whereas levels typically remain above 160 dB out to 4–15 km (e.g., Tolstoy *et al.* 2009). Reaction distances for delphinids are more consistent with the typical 170 dB re 1 μPa (rms) distances. Stone (2003) and Stone and Tasker (2006) reported that all small odontocetes (including killer whales) observed during seismic surveys in UK waters remained significantly further from the source during periods of shooting on surveys with large volume airgun arrays than during periods without airgun shooting.

Due to their relatively higher frequency hearing ranges when compared to mysticetes, odontocetes may have stronger responses to mid- and high-frequency sources such as sub-bottom profilers, side scan sonar, and echo sounders than mysticetes (Richardson *et al.* 1995; Southall *et al.* 2007).

Pinnipeds: Few studies of the reactions of pinnipeds to noise from open-water seismic exploration have been published (for review of the early literature, see Richardson *et al.* 1995). However, pinnipeds have been observed during a number of seismic monitoring studies. Monitoring in the Beaufort Sea during 1996–2002 provided a substantial amount of information on avoidance responses (or lack thereof) and associated behavior. Additional monitoring of that type has been done in the Beaufort and Chukchi Seas in 2006–2009. Pinnipeds exposed to seismic surveys have also been observed during seismic surveys along the U.S. west coast. Also, there are data on the reactions of pinnipeds to various other related types of impulsive sounds.

Early observations provided considerable evidence that pinnipeds are often quite tolerant of strong pulsed sounds. During seismic exploration off Nova Scotia, gray seals exposed to noise from airguns and linear explosive charges reportedly did not react strongly (J. Parsons in Greene *et al.* 1985). An airgun caused an initial startle reaction among South African fur seals but was ineffective in scaring them away from fishing gear. Pinnipeds in both water and air sometimes tolerate strong noise pulses from non-explosive and explosive scaring devices, especially if attracted to the area for feeding or reproduction (Mate and Harvey 1987; Reeves *et al.* 1996). Thus, pinnipeds are expected to be rather tolerant of, or to habituate to, repeated underwater sounds from distant seismic sources, at least when the animals are strongly attracted to the area.

In summary, visual monitoring from seismic vessels has shown only slight (if any) avoidance of airguns by pinnipeds, and only slight (if any) changes in behavior. These studies show that many pinnipeds do not avoid the area within a few hundred meters of an operating airgun array. However, based on the studies with large sample size, or observations from a separate monitoring vessel, or radio telemetry, it is apparent that some phocid seals do show localized avoidance of operating airguns. The limited nature of this tendency for avoidance is a concern. It suggests that one cannot rely on pinnipeds to move away, or to move very far away, before received levels of sound from an approaching seismic survey vessel approach those that may cause hearing impairment.

(2) Masking

Masking occurs when noise and signals (that animal utilizes) overlap at both spectral and temporal scales. Chronic exposure to elevated sound levels could cause masking at particular frequencies for marine mammals, which utilize sound for important biological functions. Masking can interfere with detection of acoustic signals used for orientation, communication, finding prey, and avoiding predators. Marine mammals that experience severe (high intensity and extended duration) acoustic masking could potentially suffer reduced fitness, which could lead to adverse effects on survival and reproduction.

For the airgun noise generated from the proposed marine seismic survey, these are low frequency (under 1 kHz) pulses with extremely short durations (in the scale of milliseconds). Lower frequency man-made noises are more likely to affect detection of communication calls and other potentially important natural sounds such as surf and prey noise. There is little concern regarding masking due to the brief duration of these pulses and relatively longer silence between airgun shots (9–12 seconds) near the noise source, however, at long distances (over tens of kilometers away) in deep water, due to multipath propagation and reverberation, the durations of airgun pulses can be ''stretched'' to seconds with long decays (Madsen *et al.* 2006; Clark and Gagnon 2006). Therefore it could affect communication signals used by low frequency mysticetes when they occur near the noise band and thus reduce the communication space of animals (e.g., Clark *et al.* 2009a, 2009b) and affect their vocal behavior (e.g., Foote *et al.* 2004; Holt *et al.* 2009). Further, in areas of shallow water, multipath propagation of airgun pulses could be more profound, thus affecting communication signals from marine mammals even at close distances. Average ambient noise in areas where received seismic noises are heard can be elevated. At long distances, however, the intensity of the noise is greatly reduced. Nevertheless, partial informational and energetic masking of different degrees could affect signal receiving in some marine mammals within the ensonified areas. Additional research is needed to further address these effects.

Although masking effects of pulsed sounds on marine mammal calls and other natural sounds are expected to be limited, there are few specific studies on this. Some whales continue calling in the presence of seismic pulses and whale calls often can be heard between the seismic pulses (e.g., Richardson *et al.* 1986; McDonald *et al.* 1995; Greene *et al.* 1999a, 1999b; Nieukirk *et al.* 2004; Smultea *et al.* 2004; Holst *et al.* 2005a, 2005b, 2006; Dunn and Hernandez 2009).

Among the odontocetes, there has been one report that sperm whales ceased calling when exposed to pulses from a very distant seismic ship (Bowles *et al.* 1994). However, more recent studies of sperm whales found that they continued calling in the presence of seismic pulses (Madsen *et al.* 2002; Tyack *et al.* 2003; Smultea *et al.* 2004; Holst *et al.* 2006; Jochens *et al.* 2008). Madsen *et al.* (2006) noted that airgun sounds would not be expected to mask sperm whale calls given the intermittent nature of airgun pulses. Dolphins and porpoises are also commonly heard calling while airguns are operating (Gordon *et al.* 2004; Smultea *et al.* 2004; Holst *et al.* 2005a, 2005b; Potter *et al.* 2007). Masking effects of seismic pulses are expected to be negligible in the case of the smaller odontocetes, given the intermittent nature of seismic pulses plus the fact that sounds important to them are predominantly at much higher frequencies than are the dominant components of airgun sounds.

Pinnipeds have best hearing sensitivity and/or produce most of their sounds at frequencies higher than the dominant components of airgun sound, but there is some overlap in the frequencies of the airgun pulses and the calls. However, the intermittent nature of airgun pulses presumably reduces the potential for masking.

Marine mammals are thought to be able to compensate for masking by adjusting their acoustic behavior such as shifting call frequencies, and increasing call volume and vocalization rates, as discussed earlier (e.g., Miller et al. 2000; Parks *et al.* 2007; Di Iorio and Clark 2009; Parks *et al.* 2010); the biological significance of these modifications is still unknown.

(3) Hearing Impairment

Marine mammals exposed to high intensity sound repeatedly or for prolonged periods can experience hearing threshold shift (TS), which is the loss of hearing sensitivity at certain frequency ranges (Kastak *et al.* 1999; Schlundt *et al.* 2000; Finneran *et al.* 2002; 2005). TS can be permanent (PTS), in which case the loss of hearing sensitivity is unrecoverable, or temporary (TTS), in which case the animal's hearing threshold will recover over time (Southall *et al.* 2007). Marine mammals that experience TTS or PTS will have reduced sensitivity at the frequency band of the TS, which may affect their capability of communication, orientation, or prey detection. The degree of TS depends on the intensity of the received levels the animal is exposed to, and the frequency at which TS occurs depends on the frequency of the received noise. It has been shown that in most cases, TS occurs at the frequencies approximately one-octave above that of the received noise. Repeated noise exposure that leads to TTS could cause PTS. For transient sounds, the sound level necessary to cause TTS is inversely related to the duration of the sound.

TTS:

TTS is the mildest form of hearing impairment that can occur during exposure to a strong sound (Kryter 1985). While experiencing TTS, the hearing threshold rises and a sound must be stronger in order to be heard. It is a temporary phenomenon, and (especially when mild) is not considered to represent physical damage or ''injury'' (Southall *et al.* 2007). Rather, the onset of TTS is an indicator that, if the animal is exposed to higher levels of that sound, physical damage is ultimately a possibility.

The magnitude of TTS depends on the level and duration of noise exposure, and to some degree on frequency, among other considerations (Kryter 1985; Richardson *et al.* 1995; Southall *et al.* 2007). For sound exposures at or somewhat above the TTS threshold, hearing sensitivity recovers rapidly after exposure to the noise ends. In terrestrial mammals, TTS can last from minutes or hours to (in cases of strong TTS) days. Only a few data have been obtained on sound levels and durations necessary to elicit mild TTS in marine mammals (none in mysticetes), and none of the published data concern TTS elicited by exposure to multiple pulses of sound during operational seismic surveys (Southall *et al.* 2007).

For toothed whales, experiments on a bottlenose dolphin (*Tursiops truncates*) and beluga whale showed that exposure to a single watergun impulse at a received level of 207 kPa (or 30 psi) peak-to-peak (p-p), which is equivalent to 228 dB re 1 μPa (p-p), resulted in a 7 and 6 dB TTS in the beluga whale at 0.4 and 30 kHz, respectively. Thresholds returned to within 2 dB of the pre-exposure level within 4 minutes of the exposure (Finneran *et al.* 2002). No TTS was observed in the bottlenose dolphin.

Finneran *et al.* (2005) further examined the effects of tone duration on TTS in bottlenose dolphins. Bottlenose dolphins were exposed to 3 kHz tones (non-impulsive) for periods of 1, 2, 4 or

8 seconds (s), with hearing tested at 4.5 kHz. For 1-s exposures, TTS occurred with SELs of 197 dB, and for exposures >1 s, SEL >195 dB resulted in TTS (SEL is equivalent to energy flux, in dB re 1 μPa²-s). At an SEL of 195 dB, the mean TTS (4 min after exposure) was 2.8 dB. Finneran *et al.* (2005) suggested that an SEL of 195 dB is the likely threshold for the onset of TTS in dolphins and belugas exposed to tones of durations 1–8 s (i.e., TTS onset occurs at a near-constant SEL, independent of exposure duration). That implies that, at least for non-impulsive tones, a doubling of exposure time results in a 3 dB lower TTS threshold.

However, the assumption that, in marine mammals, the occurrence and magnitude of TTS is a function of cumulative acoustic energy (SEL) is probably an oversimplification. Kastak *et al.* (2005) reported preliminary evidence from pinnipeds that, for prolonged non-impulse noise, higher SELs were required to elicit a given TTS if exposure duration was short than if it was longer, i.e., the results were not fully consistent with an equal-energy model to predict TTS onset. Mooney *et al.* (2009a) showed this in a bottlenose dolphin exposed to octave-band non-impulse noise ranging from 4 to 8 kHz at SPLs of 130 to 178 dB re 1 μPa for periods of 1.88 to 30 minutes (min). Higher SELs were required to induce a given TTS if exposure duration was short than if it was longer. Exposure of the aforementioned bottlenose dolphin to a sequence of brief sonar signals showed that, with those brief (but non-impulse) sounds, the received energy (SEL) necessary to elicit TTS was higher than was the case with exposure to the more prolonged octave-band noise (Mooney *et al.* 2009b). Those authors concluded that, when using (non-impulse) acoustic signals of duration ~0.5 s, SEL must be at least 210–214 dB re 1 μPa²-s to induce TTS in the bottlenose dolphin. The most recent studies conducted by Finneran *et al.* also support the notion that exposure duration has a more significant influence compared to SPL as the duration increases, and that TTS growth data are better represented as functions of SPL and duration rather than SEL alone (Finneran *et al.* 2010a, 2010b). In addition, Finneran *et al.* (2010b) conclude that when animals are exposed to intermittent noises, there is recovery of hearing during the quiet intervals between exposures through the accumulation of TTS across multiple exposures. Such findings suggest that when exposed to multiple seismic pulses, partial hearing recovery also occurs during the seismic pulse intervals.

For baleen whales, there are no data, direct or indirect, on levels or properties of sound that are required to induce TTS. The frequencies to which baleen whales are most sensitive are lower than those to which odontocetes are most sensitive, and natural ambient noise levels at those low frequencies tend to be higher (Urick 1983). As a result, auditory thresholds of baleen whales within their frequency band of best hearing are believed to be higher (less sensitive) than are those of odontocetes at their best frequencies (Clark and Ellison 2004). From this, it is suspected that received levels causing TTS onset may also be higher in baleen whales. However, no cases of TTS are expected given the small size of the airguns proposed to be used and the strong likelihood that baleen whales (especially migrating bowheads) would avoid the approaching airguns (or vessel) before being exposed to levels high enough for there to be any possibility of TTS.

In pinnipeds, TTS thresholds associated with exposure to brief pulses (single or multiple) of underwater sound have not been measured. Initial evidence from prolonged exposures suggested that some pinnipeds may incur TTS at somewhat lower received levels than do small odontocetes exposed for similar durations (Kastak *et al.* 1999; 2005). However, more recent indications are that TTS onset in the most sensitive pinniped species studied (harbor seal, which is closely related to the ringed seal) may occur at a similar SEL as in odontocetes (Kastak *et al.* 2004).

Most cetaceans show some degree of avoidance of seismic vessels operating an airgun array (see above). It is unlikely that these cetaceans would be exposed to airgun pulses at a sufficiently high level for a sufficiently long period to cause more than mild TTS, given the relative movement of the vessel and the marine mammal. TTS would be more likely in any odontocetes that bow- or wake-ride or otherwise linger near the airguns. However, while bow- or wake-riding, odontocetes would be at the surface and thus not exposed to strong sound pulses given the pressure release and Lloyd Mirror effects at the surface. But if bow- or wake-riding animals were to dive intermittently near airguns, they would be exposed to strong sound pulses, possibly repeatedly.

If some cetaceans did incur mild or moderate TTS through exposure to airgun sounds in this manner, this would very likely be a temporary and reversible phenomenon. However, even a temporary reduction in hearing sensitivity could be deleterious in the event that, during that period of reduced sensitivity, a marine mammal needed its full hearing sensitivity to detect approaching predators, or for some other reason.

Some pinnipeds show avoidance reactions to airguns, but their avoidance reactions are generally not as strong or consistent as those of cetaceans. Pinnipeds occasionally seem to be attracted to operating seismic vessels. There are no specific data on TTS thresholds of pinnipeds exposed to single or multiple low-frequency pulses. However, given the indirect indications of a lower TTS threshold for the harbor seal than for odontocetes exposed to impulse sound (see above), it is possible that some pinnipeds close to a large airgun array could incur TTS.

NMFS currently typically includes mitigation requirements to ensure that cetaceans and pinnipeds are not exposed to pulsed underwater noise at received levels exceeding, respectively, 180 and 190 dB re 1 μPa (rms). The 180/190 dB acoustic criteria were taken from recommendations by an expert panel of the High Energy Seismic Survey (HESS) Team that performed an assessment on noise impacts by seismic airguns to marine mammals in 1997, although the HESS Team recommended a 180-dB limit for pinnipeds in California (HESS 1999). The 180 and 190 dB re 1 μPa (rms) levels have not been considered to be the levels above which TTS might occur. Rather, they were the received levels above which, in the view of a panel of bioacoustics specialists convened by NMFS before TTS measurements for marine mammals started to become available, one could not be certain that there would be no injurious effects, auditory or otherwise, to marine mammals. As summarized above, data that are now available imply that TTS is unlikely to occur in various odontocetes (and probably mysticetes as well) unless they are exposed to a sequence of several airgun pulses stronger than 190 dB re 1 μPa (rms). On the other hand, for the harbor seal, harbor porpoise, and perhaps some other species, TTS may occur upon exposure to one or more airgun pulses whose received level equals the NMFS ''do not exceed'' value of 190 dB re 1 μPa (rms). That criterion corresponds to a single-pulse SEL of 175–180 dB re 1 μPa²-s in typical conditions, whereas TTS is suspected to be possible in harbor seals and harbor porpoises with a cumulative SEL of ~171 and ~164 dB re 1 μPa²-s, respectively.

It has been shown that most large whales and many smaller odontocetes

(especially the harbor porpoise) show at least localized avoidance of ships and/or seismic operations. Even when avoidance is limited to the area within a few hundred meters of an airgun array, that should usually be sufficient to avoid TTS based on what is currently known about thresholds for TTS onset in cetaceans. In addition, ramping up airgun arrays, which is standard operational protocol for many seismic operators, may allow cetaceans near the airguns at the time of startup (if the sounds are aversive) to move away from the seismic source and to avoid being exposed to the full acoustic output of the airgun array. Thus, most baleen whales likely will not be exposed to high levels of airgun sounds provided the ramp-up procedure is applied. Likewise, many odontocetes close to the trackline are likely to move away before the sounds from an approaching seismic vessel become sufficiently strong for there to be any potential for TTS or other hearing impairment. Hence, there is little potential for baleen whales or odontocetes that show avoidance of ships or airguns to be close enough to an airgun array to experience TTS. Nevertheless, even if marine mammals were to experience TTS, the magnitude of the TTS is expected to be mild and brief, only in a few decibels for minutes.

PTS:

When PTS occurs, there is physical damage to the sound receptors in the ear. In some cases, there can be total or partial deafness, whereas in other cases, the animal has an impaired ability to hear sounds in specific frequency ranges (Kryter 1985). Physical damage to a mammal's hearing apparatus can occur if it is exposed to sound impulses that have very high peak pressures, especially if they have very short rise times. (Rise time is the interval required for sound pressure to increase from the baseline pressure to peak pressure.)

There is no specific evidence that exposure to pulses of airgun sound can cause PTS in any marine mammal, even with large arrays of airguns. However, given the likelihood that some mammals close to an airgun array might incur at least mild TTS (see above), there has been further speculation about the possibility that some individuals occurring very close to airguns might incur PTS (e.g., Richardson *et al.* 1995; Gedamke *et al.* 2008). Single or occasional occurrences of mild TTS are not indicative of permanent auditory damage, but repeated or (in some cases) single exposures to a level well above that causing TTS onset might elicit PTS.

Relationships between TTS and PTS thresholds have not been studied in marine mammals, but are assumed to be similar to those in humans and other terrestrial mammals (Southall *et al.* 2007). Based on data from terrestrial mammals, a precautionary assumption is that the PTS threshold for impulse sounds (such as airgun pulses as received close to the source) is at least 6 dB higher than the TTS threshold on a peak-pressure basis, and probably >6 dB higher (Southall *et al.* 2007). The low-to-moderate levels of TTS that have been induced in captive odontocetes and pinnipeds during controlled studies of TTS have been confirmed to be temporary, with no measurable residual PTS (Kastak *et al.* 1999; Schlundt *et al.* 2000; Finneran *et al.* 2002; 2005; Nachtigall *et al.* 2003; 2004). However, very prolonged exposure to sound strong enough to elicit TTS, or shorter-term exposure to sound levels well above the TTS threshold, can cause PTS, at least in terrestrial mammals (Kryter 1985). In terrestrial mammals, the received sound level from a single non-impulsive sound exposure must be far above the TTS threshold for any risk of permanent hearing damage (Kryter 1994; Richardson *et al.* 1995; Southall *et al.* 2007). However, there is special concern about strong sounds whose pulses have very rapid rise times. In terrestrial mammals, there are situations when pulses with rapid rise times (e.g., from explosions) can result in PTS even though their peak levels are only a few dB higher than the level causing slight TTS. The rise time of airgun pulses is fast, but not as fast as that of an explosion.

Some factors that contribute to onset of PTS, at least in terrestrial mammals, are as follows:

- Exposure to a single very intense sound,
- Fast rise time from baseline to peak pressure,
- Repetitive exposure to intense sounds that individually cause TTS but not PTS, and
- Recurrent ear infections or (in captive animals) exposure to certain drugs.

Cavanagh (2000) reviewed the thresholds used to define TTS and PTS. Based on this review and SACLANT (1998), it is reasonable to assume that PTS might occur at a received sound level 20 dB or more above that inducing mild TTS. However, for PTS to occur at a received level only 20 dB above the TTS threshold, the animal probably would have to be exposed to a strong sound for an extended period, or to a strong sound with a rather rapid rise time.

More recently, Southall *et al.* (2007) estimated that received levels would need to exceed the TTS threshold by at least 15 dB, on an SEL basis, for there to be risk of PTS. Thus, for cetaceans exposed to a sequence of sound pulses, they estimate that the PTS threshold might be an M-weighted SEL (for the sequence of received pulses) of ~198 dB re 1 μPa^2-s. Additional assumptions had to be made to derive a corresponding estimate for pinnipeds, as the only available data on TTS-thresholds in pinnipeds pertained to nonimpulse sound (see above). Southall *et al.* (2007) estimated that the PTS threshold could be a cumulative SEL of ~186 dB re 1 μPa^2-s in the case of a harbor seal exposed to impulse sound. The PTS threshold for the California sea lion and northern elephant seal would probably be higher given the higher TTS thresholds in those species. Southall *et al.* (2007) also note that, regardless of the SEL, there is concern about the possibility of PTS if a cetacean or pinniped received one or more pulses with peak pressure exceeding 230 or 218 dB re 1 μPa, respectively. Thus, PTS might be expected upon exposure of cetaceans to either SEL ≥198 dB re 1 μPa^2-s or peak pressure ≥230 dB re 1 μPa. Corresponding proposed dual criteria for pinnipeds (at least harbor seals) are ≥186 dB SEL and ≥218 dB peak pressure (Southall *et al.* 2007). These estimates are all first approximations, given the limited underlying data, assumptions, species differences, and evidence that the ''equal energy'' model may not be entirely correct.

Sound impulse duration, peak amplitude, rise time, number of pulses, and inter-pulse interval are the main factors thought to determine the onset and extent of PTS. Ketten (1994) has noted that the criteria for differentiating the sound pressure levels that result in PTS (or TTS) are location and species specific. PTS effects may also be influenced strongly by the health of the receiver's ear.

As described above for TTS, in estimating the amount of sound energy required to elicit the onset of TTS (and PTS), it is assumed that the auditory effect of a given cumulative SEL from a series of pulses is the same as if that amount of sound energy were received as a single strong sound. There are no data from marine mammals concerning the occurrence or magnitude of a potential partial recovery effect between pulses. In deriving the estimates of PTS (and TTS) thresholds quoted here, Southall *et al.* (2007) made the precautionary assumption that no recovery would occur between pulses.

It is unlikely that an odontocete would remain close enough to a large airgun array for sufficiently long to

incur PTS. There is some concern about bowriding odontocetes, but for animals at or near the surface, auditory effects are reduced by Lloyd's mirror and surface release effects. The presence of the vessel between the airgun array and bow-riding odontocetes could also, in some but probably not all cases, reduce the levels received by bow-riding animals (e.g., Gabriele and Kipple 2009). The TTS (and thus PTS) thresholds of baleen whales are unknown but, as an interim measure, assumed to be no lower than those of odontocetes. Also, baleen whales generally avoid the immediate area around operating seismic vessels, so it is unlikely that a baleen whale could incur PTS from exposure to airgun pulses. The TTS (and thus PTS) thresholds of some pinnipeds (e.g., harbor seal) as well as the harbor porpoise may be lower (Kastak *et al.* 2005; Southall *et al.* 2007; Lucke *et al.* 2009). If so, TTS and potentially PTS may extend to a somewhat greater distance for those animals. Again, Lloyd's mirror and surface release effects will ameliorate the effects for animals at or near the surface.

(4) Non-Auditory Physical Effects

Non-auditory physical effects might occur in marine mammals exposed to strong underwater pulsed sound. Possible types of non-auditory physiological effects or injuries that theoretically might occur in mammals close to a strong sound source include neurological effects, bubble formation, and other types of organ or tissue damage. Some marine mammal species (i.e., beaked whales) may be especially susceptible to injury and/or stranding when exposed to intense sounds. However, there is no definitive evidence that any of these effects occur even for marine mammals in close proximity to large arrays of airguns, and beaked whales do not occur in the proposed project area. In addition, marine mammals that show behavioral avoidance of seismic vessels, including most baleen whales, some odontocetes (including belugas), and some pinnipeds, are especially unlikely to incur non-auditory impairment or other physical effects.

Therefore, it is unlikely that such effects would occur during SAE's proposed seismic surveys given the brief duration of exposure, the small sound sources, and the planned monitoring and mitigation measures described later in this document.

Additional non-auditory effects include elevated levels of stress response (Wright *et al.* 2007; Wright and Highfill 2007). Although not many studies have been done on noise-induced stress in marine mammals, extrapolation of information regarding stress responses in other species seems applicable because the responses are highly consistent among all species in which they have been examined to date (Wright *et al.* 2007). Therefore, it is reasonable to conclude that noise acts as a stressor to marine mammals. Furthermore, given that marine mammals will likely respond in a manner consistent with other species studied, repeated and prolonged exposures to stressors (including or induced by noise) could potentially be problematic for marine mammals of all ages. Wright *et al.* (2007) state that a range of issues may arise from an extended stress response including, but not limited to, suppression of reproduction (physiologically and behaviorally), accelerated aging and sickness-like symptoms. However, as mentioned above, SAE's proposed activity is not expected to result in these severe effects due to the nature of the potential sound exposure.

(5) Stranding and Mortality

Marine mammals close to underwater detonations can be killed or severely injured, and the auditory organs are especially susceptible to injury (Ketten *et al.* 1993; Ketten 1995). Airgun pulses are less energetic and their peak amplitudes have slower rise times, while stranding and mortality events would include other energy sources (acoustical or shock wave) far beyond just seismic airguns. To date, there is no evidence that serious injury, death, or stranding by marine mammals can occur from exposure to airgun pulses, even in the case of large airgun arrays.

However, in numerous past IHA notices for seismic surveys, commenters have referenced two stranding events allegedly associated with seismic activities, one off Baja California and a second off Brazil. NMFS has addressed this concern several times, and, without new information, does not believe that this issue warrants further discussion. For information relevant to strandings of marine mammals, readers are encouraged to review NMFS' response to comments on this matter found in 69 FR 74906 (December 14, 2004), 71 FR 43112 (July 31, 2006), 71 FR 50027 (August 24, 2006), and 71 FR 49418 (August 23, 2006).

It should be noted that strandings related to sound exposure have not been recorded for marine mammal species in the Chukchi or Beaufort seas. NMFS notes that in the Beaufort and Chukchi seas, aerial surveys have been conducted by BOEM (previously MMS) and industry during periods of industrial activity (and by BOEM during times with no activity). No strandings or marine mammals in distress have been observed during these surveys and none have been reported by North Slope Borough inhabitants. In addition, there are very few instances that seismic surveys in general have been linked to marine mammal strandings, other than those mentioned above. As a result, NMFS does not expect any marine mammals will incur serious injury or mortality in the Arctic Ocean or strand as a result of the proposed marine survey.

Potential Effects of Sonar Signals

Industrial standard navigational sonars would be used during SAE's proposed 3D seismic surveys program for navigation safety. Source characteristics of the representative generic equipment are discussed in the ''Description of Specific Activity'' section above. In general, the potential effects of this equipment on marine mammals are similar to those from the airgun, except the magnitude of the impacts is expected to be much less due to the lower intensity, higher frequencies, and with downward narrow beam patterns. In some cases, due to the fact that the operating frequencies of some of this equipment (e.g., Kongsberg EA600 with frequencies up to 200 kHz) are above the hearing ranges of marine mammals, they are not expected to have any impacts to marine mammals.

Vessel Sounds

In addition to the noise generated from seismic airguns and active sonar systems, two vessels would be involved in the operations, including a source vessel and a support vessel that provides marine mammal monitoring and logistic support. Sounds from boats and vessels have been reported extensively (Greene and Moore 1995; Blackwell and Greene 2002; 2005; 2006). Numerous measurements of underwater vessel sound have been performed in support of recent industry activity in the Chukchi and Beaufort Seas. Results of these measurements were reported in various 90-day and comprehensive reports since 2007 (e.g., Aerts *et al.* 2008; Hauser *et al.* 2008; Brueggeman 2009; Ireland *et al.* 2009; O'Neill and McCrodan 2011; Chorney *et al.* 2011; McPherson and Warner 2012). For example, Garner and Hannay (2009) estimated sound pressure levels of 100 dB at distances ranging from approximately 1.5 to 2.3 mi (2.4 to 3.7 km) from various types of barges. MacDonald *et al.* (2008) estimated higher underwater SPLs from the

seismic vessel *Gilavar* of 120 dB at approximately 13 mi (21 km) from the source, although the sound level was only 150 dB at 85 ft (26 m) from the vessel. Compared to airgun pulses, underwater sound from vessels is generally at relatively low frequencies.

The primary sources of sounds from all vessel classes are propeller cavitation, propeller singing, and propulsion or other machinery. Propeller cavitation is usually the dominant noise source for vessels (Ross 1976). Propeller cavitation and singing are produced outside the hull, whereas propulsion or other machinery noise originates inside the hull. There are additional sounds produced by vessel activity, such as pumps, generators, flow noise from water passing over the hull, and bubbles breaking in the wake. Source levels from various vessels would be empirically measured before the start of the seismic surveys.

Anticipated Effects on Habitat

The primary potential impacts to marine mammals and other marine species are associated with elevated sound levels produced by airguns and vessels operating in the area. However, other potential impacts to the surrounding habitat from physical disturbance are also possible.

With regard to fish as a prey source for cetaceans and pinnipeds, fish are known to hear and react to sounds and to use sound to communicate (Tavolga *et al.* 1981) and possibly avoid predators (Wilson and Dill 2002). Experiments have shown that fish can sense both the strength and direction of sound (Hawkins 1981). Primary factors determining whether a fish can sense a sound signal, and potentially react to it, are the frequency of the signal and the strength of the signal in relation to the natural background noise level.

The level of sound at which a fish will react or alter its behavior is usually well above the detection level. Fish have been found to react to sounds when the sound level increased to about 20 dB above the detection level of 120 dB (Ona 1988); however, the response threshold can depend on the time of year and the fish's physiological condition (Engas *et al.* 1993). In general, fish react more strongly to pulses of sound rather than non-pulse signals (such as noise from vessels) (Blaxter *et al.* 1981), and a quicker alarm response is elicited when the sound signal intensity rises rapidly compared to sound rising more slowly to the same level.

Investigations of fish behavior in relation to vessel noise (Olsen *et al.* 1983; Ona 1988; Ona and Godo 1990) have shown that fish react when the sound from the engines and propeller exceeds a certain level. Avoidance reactions have been observed in fish such as cod and herring when vessels approached close enough that received sound levels are 110 dB to 130 dB (Nakken 1992; Olsen 1979; Ona and Godo 1990; Ona and Toresen 1988). However, other researchers have found that fish such as polar cod, herring, and capeline are often attracted to vessels (apparently by the noise) and swim toward the vessel (Rostad *et al.* 2006). Typical sound source levels of vessel noise in the audible range for fish are 150 dB to 170 dB (Richardson *et al.* 1995).

Further, during the seismic survey only a small fraction of the available habitat would be ensonified at any given time. Disturbance to fish species would be short-term and fish would return to their pre-disturbance behavior once the seismic activity ceases (McCauley *et al.* 2000a, 2000b; Santulli *et al.* 1999; Pearson *et al.* 1992). Thus, the proposed survey would have little, if any, impact on the abilities of marine mammals to feed in the area where seismic work is planned.

Some mysticetes, including bowhead whales, feed on concentrations of zooplankton. Some feeding bowhead whales may occur in the Alaskan Beaufort Sea in July and August, and others feed intermittently during their westward migration in September and October (Richardson and Thomson [eds.] 2002; Lowry *et al.* 2004). A reaction by zooplankton to a seismic impulse would only be relevant to whales if it caused concentrations of zooplankton to scatter. Pressure changes of sufficient magnitude to cause that type of reaction would probably occur only very close to the source. Impacts on zooplankton behavior are predicted to be negligible, and that would translate into negligible impacts on feeding mysticetes. Thus, the proposed activity is not expected to have any habitat-related effects on prey species that could cause significant or long-term consequences for individual marine mammals or their populations.

Potential Impacts on Availability of Affected Species or Stock for Taking for Subsistence Uses

Subsistence hunting is an essential aspect of Inupiat Native life, especially in rural coastal villages. The Inupiat participate in subsistence hunting activities in and around the Beaufort Sea. The animals taken for subsistence provide a significant portion of the food that will last the community through the year. Marine mammals represent on the order of 60–80% of the total subsistence harvest. Along with the nourishment necessary for survival, the subsistence activities strengthen bonds within the culture, provide a means for educating the young, provide supplies for artistic expression, and allow for important celebratory events.

The proposed seismic activities will occur within the marine subsistence area used by the village of Nuiqsut. Nuiqsut was established in 1973 at a traditional location on the Colville River providing equal access to upland (e.g., caribou, Dall sheep) and marine (e.g., whales, seals, and eiders) resources (Brown 1979).

Potential Impacts to Subsistence Uses

NMFS has defined ''unmitigable adverse impact'' in 50 CFR 216.103 as: ''. . . an impact resulting from the specified activity: (1) That is likely to reduce the availability of the species to a level insufficient for a harvest to meet subsistence needs by: (i) Causing the marine mammals to abandon or avoid hunting areas; (ii) Directly displacing subsistence users; or (iii) Placing physical barriers between the marine mammals and the subsistence hunters; and (2) That cannot be sufficiently mitigated by other measures to increase the availability of marine mammals to allow subsistence needs to be met.''

(1) Bowhead Whales

Ten primary coastal Alaskan villages deploy whaling crews during whale migrations. Around SAE's proposed project areas in the Beaufort Sea, the primary bowhead hunting villages that could be affected are Barrow and Nuiqsut.

Whaling crews in Barrow hunt in both the spring and the fall (Funk and Galginaitis 2005). The primary bowhead whale hunt in Barrow occurs during spring, while the fall hunt is used to meet the quota and seek strikes that can be transferred from other communities. In the spring, the whales are hunted along leads that occur when the pack ice starts deteriorating. This tends to occur between the first week of April through May in Barrow, well before the proposed 3D OBC seismic survey would be conducted. The survey will start after all the ice melts, which would occur around mid-July.

Although Nuiqsut is located 40 km (25 mi) inland, bowhead whales are still a major fall subsistence resource. Although bowhead whales have been harvested in the past all along the barrier islands, Cross Island is the site currently used as the fall whaling base as it includes cabins and equipment for butchering whales. However, whalers

must travel about 160 km (100 mi) annually to reach the Cross Island whaling camp which is located over 110 direct km (70 mi) from Nuiqsut. Whaling activity usually begins in late August with the arrival of whales migrating from the Canadian Beaufort Sea, and may occur as late as early October depending on ice conditions and quota fulfillment. Most whaling occurs relatively near (<16 km; <10 mi) the island, largely to prevent meat spoilage that can occur with a longer tow back to Cross Island. Since 1993, Cross Island hunters have harvested one to four whales annually, averaging three.

Cross Island is located 70 km (44 mi) east of the eastern boundary of the seismic survey box, while Barrow is located approximately 350 km (217 mi) west of the western boundary of the seismic survey box. At this far distance, seismic activities are unlikely to affect Barrow or Cross Island based whaling, especially if the seismic operations temporarily cease during the fall bowhead whale hunt.

(2) Beluga Whales

Belugas typically do not represent a large proportion of the subsistence harvests by weight in the communities of Nuiqsut and Barrow. Barrow residents hunt beluga in the spring (normally after the bowhead hunt) in leads between Point Barrow and Skull Cliffs in the Chukchi Sea primarily in April–June, and later in the summer (July–August) on both sides of the barrier island in Elson Lagoon/Beaufort Sea (MMS 2008), but harvest rates indicate the hunts are not frequent. Although Nuiqsut whalers may incidentally harvest beluga whales while hunting bowheads, these whales are rarely seen and are not actively pursued. Any harvest would occur most likely in association with Cross Island.

For the same reason discussed above, the great distances from Barrow and Cross Island to either of the boundaries of the seismic survey box prompt NMFS to preliminarily determine that the proposed seismic activities would not adversely affect subsistence beluga whale hunt.

(3) Seals

The potential seismic survey area is also used by Nuiqsut villagers for hunting seals. All three seal species—ringed, spotted, and bearded—are taken. Sealing begins in April and May when villagers hunt seals at breathing holes in Harrison Bay. In early June, hunting is concentrated at the mouth of the Colville River where ice breakup flooding results in the ice thinning and seals becoming more visible. Once the ice is clear of the Delta (late June), hunters will hunt in open boats along the ice edge from Harrison Bay to Thetis Island in a route called ''round the world''. Thetis Island is important as it provides a weather refuge and a base for hunting bearded seals. During the July and August ringed and spotted seals are hunted in the lower 65 km (40 mi) of the Colville River proper.

In terms of pounds, approximately one-third of the village of Nuiqsut's annual subsistence harvest is marine mammals (fish and caribou dominate the rest), of which bowhead whales contribute by far the most (Fuller and George 1999). Seals contribute only 2 to 3 percent of annual subsistence harvest (Brower and Opie 1997, Brower and Hepa 1998, Fuller and George 1999). Fuller and George (1999) estimated that 46 seals were harvested in 1992. The more common ringed seals appear to dominate the harvest although the larger and thicker skinned bearded seals are probably preferred. Spotted seals occur in the Colville River Delta in small numbers, which is reflected in the harvest.

Available harvest records suggest that most seal harvest occurs in the months preceding the July start of seismic survey when waning ice conditions provide the best opportunity to approach and kill hauled out seals. Much of the late summer seal harvest occurs in the Colville River as the seals follow fish runs upstream. Still, open water seal hunting could occur coincident with the seismic surveys, especially bearded seal hunts based from Thetis Island. In general, however, given the relatively low contribution of seals to the Nuiqsut subsistence, and the greater opportunity to hunt seals earlier in the season, the seismic survey impact to seal hunting is likely remote. Impacts to seal populations in general are also very small.

As stated earlier, the proposed seismic survey would take place between July and October. The timing of the surveys activities would mostly avoid any spring hunting activities in Beaufort Sea villages. In addition, the proposed seismic surveys would occur in areas great distances from the places where subsistence activities occur. Therefore, due to the time and spatial separation of SAE's proposed 3D seismic surveys and the subsistent harvest by the local communities, it is anticipated to have no effects on spring harvesting and little or no effects on the occasional summer harvest of beluga whale, subsistence seal hunts (ringed and spotted seals are primarily harvested in winter while bearded seals are hunted during July–September in the Beaufort Sea), or the fall bowhead hunt.

In addition, SAE has developed and proposes to implement a number of mitigation measures (described in the next section) which include a proposed Marine Mammal Monitoring and Mitigation Plan (4MP), employment of subsistence advisors in the villages, and implementation of a Communications Plan (with operation of Communication Centers). SAE has also prepared a Plan of Cooperation (POC) under 50 CFR 216.104 Article 12 of the MMPA that addresses potential impacts on subsistent seal hunting activities.

Finally, to ensure that there will be no conflict from SAE's proposed open-water seismic surveys to subsistence activities, SAE stated that it will maintain communications with subsistence communities via the communication centers (Com and Call Centers) and signed the Conflict Avoidance Agreement (CAA) with Alaska whaling communities.

Proposed Mitigation

In order to issue an incidental take authorization under Section 101(a)(5)(D) of the MMPA, NMFS must set forth the permissible methods of taking pursuant to such activity, and other means of effecting the least practicable adverse impact on such species or stock and its habitat, paying particular attention to rookeries, mating grounds, and areas of similar significance, and on the availability of such species or stock for taking for certain subsistence uses.

For the proposed SAE open-water 3D OBC seismic surveys in the Beaufort Sea, SAE worked with NMFS and proposed the following mitigation measures to minimize the potential impacts to marine mammals in the project vicinity as a result of the marine seismic survey activities. The primary purpose of these mitigation measures is to detect marine mammals within, or about to enter designated exclusion zones and to initiate immediate shutdown or power down of the airgun(s), therefore it's very unlikely potential injury or TTS to marine mammals would occur, and Level B behavioral of marine mammals would be reduced to the lowest level practicable.

(1) Establishing Exclusion and Disturbance Zones

Under current NMFS guidelines, the ''exclusion zone'' for marine mammal exposure to impulse sources is customarily defined as the area within which received sound levels are ≥180 dB (rms) re 1 μPa for cetaceans and ≥190

dB (rms) re 1 μPa for pinnipeds. These safety criteria are based on an assumption that SPL received at levels lower than these will not injure these animals or impair their hearing abilities, but that at higher levels might have some such effects. Disturbance or behavioral effects to marine mammals from underwater sound may occur after exposure to sound at distances greater than the exclusion zones (Richarcdson *et al.* 1995). Currently, NMFS uses 160 dB (rms) re 1 μPa as the threshold for Level B behavioral harassment from impulses noise.

As discussed above, the acoustic propagation of the proposed 440-in^3, 880-in^3, and 1,760-in^3 airgun arrays were predicted using JASCO's model provided in Aerts *et al.* (2008), corrected with the measured or manufacture's source levels. The resulting isopleths modeled for the 190, 180, and 160 dB (rms) re 1 μPa exclusion zones and zones of influence are listed in Table 2.

These safety distances will be implemented at the commencement of 2013 airgun operations to establish marine mammal exclusion zones used for mitigation. SAE will conduct sound source measurements of the airgun array at the beginning of survey operations in 2013 to verify the size of the various marine mammal exclusion zones. The acoustic data will be analyzed as quickly as reasonably practicable in the field and used to verify and adjust the marine mammal exclusion zone distances. The mitigation measures to be implemented at the 190 and 180 dB (rms) sound levels will include power downs and shut downs as described below.

(2) Vessel Related Mitigation Measures

This proposed mitigation measures apply to all vessels that are part of the Beaufort Sea seismic survey activities, including supporting vessels.

- Avoid concentrations or groups of whales by all vessels under the direction of SAE. Operators of vessels should, at all times, conduct their activities at the maximum distance possible from such concentrations of whales.
- Vessels in transit shall be operated at speeds necessary to ensure no physical contact with whales occurs. If any vessel approaches within 1.6 km (1 mi) of observed bowhead whales, except when providing emergency assistance to whalers or in other emergency situations, the vessel operator will take reasonable precautions to avoid potential interaction with the bowhead whales by taking one or more of the following actions, as appropriate:
  - Reducing vessel speed to less than 5 knots within 300 yards (900 feet or 274 m) of the whale(s);
  - Steering around the whale(s) if possible;
  - Operating the vessel(s) in such a way as to avoid separating members of a group of whales from other members of the group;
  - Operating the vessel(s) to avoid causing a whale to make multiple changes in direction; and
  - Checking the waters immediately adjacent to the vessel(s) to ensure that no whales will be injured when the propellers are engaged.
- When weather conditions require, such as when visibility drops, adjust vessel speed accordingly to avoid the likelihood of injury to whales.

(3) Mitigation Measures for Airgun Operations

The primary role for airgun mitigation during the seismic surveys is to monitor marine mammals near the airgun array during all daylight airgun operations and during any nighttime start-up of the airguns. During the seismic surveys PSOs will monitor the pre-established exclusion zones for the presence of marine mammals. When marine mammals are observed within, or about to enter, designated safety zones, PSOs have the authority to call for immediate power down (or shutdown) of airgun operations as required by the situation. A summary of the procedures associated with each mitigation measure is provided below.

Ramp Up Procedure

A ramp up of an airgun array provides a gradual increase in sound levels, and involves a step-wise increase in the number and total volume of airguns firing until the full volume is achieved. The purpose of a ramp up (or ''soft start'') is to ''warn'' cetaceans and pinnipeds in the vicinity of the airguns and to provide time for them to leave the area and thus avoid any potential injury or impairment of their hearing abilities.

During the proposed open-water survey program, the seismic operator will ramp up the airgun arrays slowly. Full ramp ups (i.e., from a cold start after a shut down, when no airguns have been firing) will begin by firing a single airgun in the array (i.e., the mitigation airgun). A full ramp up, after a shut down, will not begin until there has been a minimum of 30 min of observation of the safety zone by PSOs to assure that no marine mammals are present. The entire exclusion zone must be visible during the 30-minute lead-in to a full ramp up. If the entire exclusion zone is not visible, then ramp up from a cold start cannot begin. If a marine mammal(s) is sighted within the safety zone during the 30-minute watch prior to ramp up, ramp up will be delayed until the marine mammal(s) is sighted outside of the exclusion zone or the animal(s) is not sighted for at least 15–30 minutes: 15 minutes for small odontocetes (harbor porpoise) and pinnipeds, or 30 minutes for baleen whales and large odontocetes (including beluga and killer whales and narwhal).

Use of a Small-Volume Airgun During Turns and Transits

Throughout the seismic survey, particularly during turning movements, and short transits, SAE will employ the use of the smallest volume airgun (i.e., ''mitigation airgun'') to deter marine mammals from being within the immediate area of the seismic operations. The mitigation airgun would be operated at approximately one shot per minute and would not be operated for longer than three hours in duration (turns may last two to three hours for the proposed project).

During turns or brief transits (e.g., less than three hours) between seismic tracklines, one mitigation airgun will continue operating. The ramp-up procedure will still be followed when increasing the source levels from one airgun to the full airgun array. However, keeping one airgun firing will avoid the prohibition of a ''cold start'' during darkness or other periods of poor visibility. Through use of this approach, seismic surveys using the full array may resume without the 30 minute observation period of the full exclusion zone required for a ''cold start''. PSOs will be on duty whenever the airguns are firing during daylight, during the 30 minute periods prior to ramp-ups.

Power-Down and Shut-Down Procedures

A power down is the immediate reduction in the number of operating energy sources from all firing to some smaller number (e.g., single mitigation airgun). A shut down is the immediate cessation of firing of all energy sources. The array will be immediately powered down whenever a marine mammal is sighted approaching close to or within the applicable safety zone of the full array, but is outside the applicable safety zone of the single mitigation source. If a marine mammal is sighted within or about to enter the applicable safety zone of the single mitigation airgun, the entire array will be shut down (i.e., no sources firing).

Poor Visibility Conditions

SAE plans to conduct 24-hour operations. PSOs will not be on duty during ongoing seismic operations during darkness, given the very limited effectiveness of visual observation at night (there will be no periods of darkness in the survey area until mid-August). The proposed provisions associated with operations at night or in periods of poor visibility include the following:

• If during foggy conditions, heavy snow or rain, or darkness (which may be encountered starting in late August), the full 180 dB exclusion zone is not visible, the airguns cannot commence a ramp-up procedure from a full shut-down.

• If one or more airguns have been operational before nightfall or before the onset of poor visibility conditions, they can remain operational throughout the night or poor visibility conditions. In this case ramp-up procedures can be initiated, even though the exclusion zone may not be visible, on the assumption that marine mammals will be alerted by the sounds from the single airgun and have moved away.

(4) Mitigation Measures for Subsistence Activities

Regulations at 50 CFR 216.104(a)(12) require IHA applicants for activities that take place in Arctic waters to provide a Plan of Cooperation (POC) or information that identifies what measures have been taken and/or will be taken to minimize adverse effects on the availability of marine mammals for subsistence purposes.

SAE has prepared a draft POC, which was developed based on identifying and evaluating any potential effects on seasonal abundance that is relied upon for subsistence use. For the proposed project SAE states that it will work closely with the North Slope Borough (NSB) and its partner Kuukpik Corporation, to identify subsistence communities and activities that may take place within or near the project area.

The scheduling of seismic activities will be discussed with representatives of all those concerned with the subsistence hunts. SAE presented the seismic project at the Alaska Eskimo Whaling Commission (AEWC) conference in December 2012 in Anchorage, Alaska. SAE also had presented the project at the open-water meeting in March 2013 in Anchorage, Alaska.

In addition, SAE plans to hold additional meeting(s) the NSB and the villages of Nuiqsut, Barrow, and Kaktovik to discuss the proposed activities and monitoring and mitigation plans to minimize impacts. These discussions are scheduled for June/July and will include:

• A description of the proposed marine seismic survey, documentation of the crew's activities;

• documentation of consultation with local communities and tribal governments;

• project maps showing project boundaries;

• ongoing scheduling updates for information on the subsistence marine activities; and

• a plan for meetings and communication with post project subsistence communities.

A final POC that documents all meetings and consultations with community leaders and subsistence users will be submitted to NMFS.

In addition, SAE is planning to sign a CAA with the Alaska whaling communities to further ensure that its proposed open-water seismic survey activities in the Beaufort Sea will not have unmitigable impacts to subsistence activities. NMFS has included appropriate measures identified in the CAA in the IHA.

Mitigation Conclusions

NMFS has carefully evaluated the applicant's proposed mitigation measures and considered a range of other measures in the context of ensuring that NMFS prescribes the means of effecting the least practicable impact on the affected marine mammal species and stocks and their habitat. Our evaluation of potential measures included consideration of the following factors in relation to one another:

• The manner in which, and the degree to which, the successful implementation of the measure is expected to minimize adverse impacts to marine mammals; and

• the practicability of the measure for applicant implementation.

Based on our evaluation of the applicant's proposed measures, as well as other measures considered by NMFS, NMFS has preliminarily determined that the proposed mitigation measures provide the means of effecting the least practicable impact on marine mammal species or stocks and their habitat, paying particular attention to rookeries, mating grounds, and areas of similar significance.

Proposed Monitoring and Reporting

In order to issue an ITA for an activity, Section 101(a)(5)(D) of the MMPA states that NMFS must set forth ''requirements pertaining to the monitoring and reporting of such taking''. The MMPA implementing regulations at 50 CFR 216.104(a)(13) indicate that requests for ITAs must include the suggested means of accomplishing the necessary monitoring and reporting that will result in increased knowledge of the species and of the level of taking or impacts on populations of marine mammals that are expected to be present in the proposed action area.

I. Proposed Monitoring Measures

The monitoring plan proposed by SAE is included in its IHA application and can be found in its Marine Mammal Monitoring and Mitigation Plan (4MP). The plan may be modified or supplemented based on comments or new information received from the public during the public comment period. A summary of the primary components of the plan follows.

Monitoring will provide information on the numbers of marine mammals potentially affected by the exploration operations and facilitate real time mitigation to prevent injury of marine mammals by industrial sounds or activities. These goals will be accomplished in the Beaufort Sea during 2013 by conducting vessel-based monitoring from both source vessels and the mitigation vessel and an acoustic monitoring program using a bottom-mounted hydrophone array to document marine mammal presence and distribution in the vicinity of the survey area.

Visual monitoring by Protected Species Observers (PSOs) during active marine survey operations, and periods when these surveys are not occurring, will provide information on the numbers of marine mammals potentially affected by these activities and facilitate real time mitigation to prevent impacts to marine mammals by industrial sounds or operations. Vessel-based PSOs onboard the survey vessels and mitigation vessel will record the numbers and species of marine mammals observed in the area and any observable reaction of marine mammals to the survey activities in the Beaufort Sea.

Visual-Based Protected Species Observers (PSOs)

The visual-based marine mammal monitoring will be implemented by a team of experienced PSOs, including both biologists and Inupiat personnel. PSOs will be stationed aboard the survey vessels and mitigation vessel through the duration of the project. The vessel-based marine mammal monitoring will provide the basis for

real-time mitigation measures as discussed in the Proposed Mitigation section. In addition, monitoring results of the vessel-based monitoring program will include the estimation of the number of ''takes'' as stipulated in the IHA.

(1) Protected Species Observers

Vessel-based monitoring for marine mammals will be done by trained PSOs throughout the period of survey activities. The observers will monitor the occurrence of marine mammals near the survey vessel during all daylight periods during operation, and during most daylight periods when operations are not occurring. PSO duties will include watching for and identifying marine mammals; recording their numbers, distances, and reactions to the survey operations; and documenting ''take by harassment''.

A sufficient number of PSOs will be required onboard the survey vessel to meet the following criteria:

- 100% monitoring coverage during all periods of survey operations in daylight;
- maximum of 4 consecutive hours on watch per PSO; and
- maximum of 12 hours of watch time per day per PSO.

PSO teams will consist of Inupiat observers and experienced field biologists. Each vessel will have an experienced field crew leader to supervise the PSO team. The total number of PSOs may decrease later in the season as the duration of daylight decreases.

(2) Observer Qualifications and Training

Crew leaders and most PSOs will be individuals with experience as observers during recent seismic, site clearance and shallow hazards, and other monitoring projects in Alaska or other offshore areas in recent years.

Biologist-observers will have previous marine mammal observation experience, and field crew leaders will be highly experienced with previous vessel-based marine mammal monitoring and mitigation projects. Resumes for those individuals will be provided to NMFS for review and acceptance of their qualifications. Inupiat observers will be experienced in the region and familiar with the marine mammals of the area. All observers will complete a NMFS-approved observer training course designed to familiarize individuals with monitoring and data collection procedures.

PSOs will complete a two or three-day training and refresher session on marine mammal monitoring, to be conducted shortly before the anticipated start of the 2013 open-water season. Any exceptions will have or receive equivalent experience or training. The training session(s) will be conducted by qualified marine mammalogists with extensive crew-leader experience during previous vessel-based seismic monitoring programs.

(3) Marine Mammal Observer Protocol

The PSOs will watch for marine mammals from the best available vantage point on the survey vessels, typically the bridge. The PSOs will scan systematically with the unaided eye and 7 x 50 reticle binoculars, supplemented with 20 x 60 image-stabilized binoculars or 25 x 150 binoculars, and night-vision equipment when needed. Personnel on the bridge will assist the marine mammal observer(s) in watching for marine mammals.

The observer(s) aboard the survey and mitigation vessels will give particular attention to the areas within the marine mammal exclusion zones around the source vessel. These zones are the maximum distances within which received levels may exceed 180 dB (rms) re 1 μPa (rms) for cetaceans, or 190 dB (rms) re 1 μPa for pinnipeds.

Distances to nearby marine mammals will be estimated with binoculars (7 x 50 binoculars) containing a reticle to measure the vertical angle of the line of sight to the animal relative to the horizon. Observers may use a laser rangefinder to test and improve their abilities for visually estimating distances to objects in the water.

When a marine mammal is seen approaching or within the exclusion zone applicable to that species, the marine survey crew will be notified immediately so that mitigation measures called for in the applicable authorization(s) can be implemented.

Night-vision equipment (Generation 3 binocular image intensifiers or equivalent units) will be available for use when/if needed. Past experience with night-vision devices (NVDs) in the Beaufort Sea and elsewhere has indicated that NVDs are not nearly as effective as visual observation during daylight hours (e.g., Harris *et al.* 1997, 1998; Moulton and Lawson 2002).

Pinniped Surveys Before, During and After Seismic Surveys

SAE will also conduct a pinniped survey in the proposed seismic survey area before, during, and after the seismic surveys to provide a basis for determining whether ringed and bearded seals alter their habitat use patterns during the seismic survey. At the moment, SAE is in the process of developing a survey design using a combination of shipboard and aerial survey of the seismic survey block. This design will focus on resident ringed and spotted seals, spotted seal haul out use in the Colville River delta, and migrating and perhaps resident bearded seals. Both vessels and aircraft surveys will follow standard line transect methods.

Field Data-Recording

The PSOs aboard the vessels will maintain a digital log of seismic surveys, noting the date and time of all changes in seismic activity (ramp-up, power-down, changes in the active seismic source, shutdowns, etc.) and any corresponding changes in monitoring radii in a project-customized Mysticetus™ observation software spreadsheet. In addition, PSOs will utilize this standardized format to record all marine mammal observations and mitigation actions (seismic source power-downs, shut-downs, and ramp-ups). Information collected during marine mammal observations will include the following:

- Vessel speed, position, and activity
- Date, time, and location of each marine mammal sighting
- Number of marine mammals observed, and group size, sex, and age categories
- Observer's name and contact information
- Weather, visibility, and ice conditions at the time of observation
- Estimated distance of marine mammals at closest approach
- Activity at the time of observation, including possible attractants present
- Animal behavior
- Description of the encounter
- Duration of encounter
- Mitigation action taken

Data will preferentially be recorded directly into handheld computers or as a back-up, transferred from hard-copy data sheets into an electronic database. A system for quality control and verification of data will be facilitated by the pre-season training, supervision by the lead PSOs, in-season data checks. Computerized data validity checks will also be conducted, and the data will be managed in such a way that it is easily summarized during and after the field program and transferred into statistical, graphical, or other programs for further processing.

Passive Acoustic Monitoring

(1) Sound Source Measurements

Prior to or at the beginning of the seismic survey, sound levels will be measured as a function of distance and direction from the proposed seismic

source array (full array and reduced to a single mitigation airgun). Results of the acoustic characterization and SSV will be used to empirically refine the modeled distance estimates of the pre-season 190 dB, 180 dB, and 160 dB isopleths. The refined SSV exclusion zones will be used for the remainder of the seismic survey. Distance estimates for the 120 dB isopleth will also be modeled. The results of the SSV will be submitted to NMFS within five days after completing the measurements, followed by a report in 14 days. A more detailed report will be provided to NMFS as part of the 90-day report following completion of the acoustic program.

(2) Passive Acoustic Monitoring Using Bottom-Mounted Hydrophones

SAE also plans to contract a hydroacoustic firm to conduct passive acoustic monitoring (PAM) with bottom-mounted hydrophones. The exact PAM methodology will depend on the firm selected, and the coordination that can be established with existing acoustical monitoring programs, but it will involve strategically placing bottom-anchored receivers near the survey area. The purpose will be to record seismic noise levels and marine mammal vocalizations before, during, and after the seismic survey. The PAM will provide additional information on marine mammal distribution and movement beyond what are observed by PSOs during the proposed seismic survey.

Monitoring Plan Peer Review

The MMPA requires that monitoring plans be independently peer reviewed ''where the proposed activity may affect the availability of a species or stock for taking for subsistence uses'' (16 U.S.C. 1371(a)(5)(D)(ii)(III)). Regarding this requirement, NMFS' implementing regulations state, ''Upon receipt of a complete monitoring plan, and at its discretion, [NMFS] will either submit the plan to members of a peer review panel for review or within 60 days of receipt of the proposed monitoring plan, schedule a workshop to review the plan'' (50 CFR 216.108(d)).

NMFS convened an independent peer review panel to review SAE's mitigation and monitoring plan in its IHA application for taking marine mammals incidental to the proposed open-water marine surveys and equipment recovery and maintenance in the Beaufort Sea during 2013. The panel initially met on January 8 and 9, 2013, in Seattle, Washington. However, the panel decided that SAE's IHA application and its 4MP did not contain adequate information for the panel to provide meaningful recommendations. After SAE revised its IHA application with additional information, on April 29, 2013, NMFS convened a new 2-person panel to conduct additional review of SAE's 4MP. Both panel members provided their final reports to NMFS in May 2013. The reports from both panel members can be viewed at: *http://www.nmfs.noaa.gov/pr/permits/incidental.htm#applications.*

NMFS provided the panel with SAE's monitoring and mitigation plan and asked the panel to address the following questions and issues for SAE's plan:

- Will the applicant's stated objectives effectively further the understanding of the impacts of their activities on marine mammals and otherwise accomplish the goals stated below? If not, how should the objectives be modified to better accomplish the goals above?
- Can the applicant achieve the stated objectives based on the methods described in the plan?
- Are there technical modifications to the proposed monitoring techniques and methodologies proposed by the applicant that should be considered to better accomplish their stated objectives?
- Are there techniques not proposed by the applicant (i.e., additional monitoring techniques or methodologies) that should be considered for inclusion in the applicant's monitoring program to better accomplish their stated objectives?
- What is the best way for an applicant to present their data and results (formatting, metrics, graphics, etc.) in the required reports that are to be submitted to NMFS (i.e., 90-day report and comprehensive report)?

The peer review panel reports contain recommendations that the panel members felt were applicable to SAE's monitoring plans. The panel agrees that the objective of vessel-based monitoring to implement mitigation measures to prevent or limit Level A takes is appropriate. In addition, at the time the panel reviewed SAE's proposed marine mammal monitoring and mitigation plan, SAE only proposed vessel-based visual monitoring, and there was no pinniped survey being proposed to document pinniped habitat usage before, during, and after the seismic surveys.

Specific recommendations provided by the peer review panel to enhance marine mammal monitoring and information sharing include:

(1) Passive acoustic monitoring for marine mammals in their study area before, during, and after operations to provide further understanding of the spatiotemporal distribution and acoustics of the marine mammal community in the area, and to provide a method of far-field monitoring;

(2) pinniped survey in the proposed seismic survey area before, during, and after the seismic surveys to provide a basis for determining whether ringed and bearded seals alter their habitat use patterns during the seismic survey;

(3) consultation and coordination with other oil and gas companies and with federal, state, and borough agencies to ensure that they have the most up-to-date information and can take advantage of other monitoring efforts; and

(4) providing a database of the information collected, plus a number of summary analyses and graphics to help NMFS assess the potential impacts of their survey. Specific summaries/analyses/graphics would include:

- Sound verification results including isopleths of sound pressure levels plotted geographically;
- A table or other summary of survey activities (i.e., did the survey proceed as planned);
- A table of sightings by time, location, species, and distance from the survey vessel;
- A geographic depiction of sightings for each species by area and month;
- A table and/or graphic summarizing behaviors observed by species;
- A table and/or graphic summarizing observed responses to the survey by species;
- A table of mitigation measures (e.g., powerdowns, shutdowns) taken by date, location, and species;
- A graphic of sightings by distance for each species and location;
- A table or graphic illustrating sightings during the survey versus sightings when the airguns were silent; and
- A summary of times when the survey was interrupted because of interactions with marine mammals.

NMFS worked with SAE on implementing the panel members' recommendations and suggestions. As a result, SAE agreed that all the above recommendations are reasonable and can be incorporated into its 4MP, and be included in the monitoring and mitigation measures.

II. Reporting Measures

Sound Source Verification Reports

A report on the preliminary results of the sound source verification measurements, including the measured 190, 180, and 160 dB (rms) radii of the airgun sources, would be submitted

within 14 days after collection of those measurements at the start of the field season. This report will specify the distances of the exclusion zones that were adopted for the survey.

Technical Reports

The results of SAE's 2013 vessel-based monitoring, including estimates of ''take'' by harassment, would be presented in the ''90-day'' and Final Technical reports, if the IHA is issued. The Technical Reports should be submitted to NMFS within 90 days after the end of the seismic survey. The Technical Reports will include:

(a) Summaries of monitoring effort (e.g., total hours, total distances, and marine mammal distribution through the study period, accounting for sea state and other factors affecting visibility and detectability of marine mammals);

(b) Analyses of the effects of various factors influencing detectability of marine mammals (e.g., sea state, number of observers, and fog/glare);

(c) Species composition, occurrence, and distribution of marine mammal sightings, including date, water depth, numbers, age/size/gender categories (if determinable), group sizes, and ice cover;

(d) To better assess impacts to marine mammals, data analysis should be separated into periods when a seismic airgun array (or a single mitigation airgun) is operating and when it is not. Final and comprehensive reports to NMFS should summarize and plot:

- Data for periods when a seismic array is active and when it is not; and
- The respective predicted received sound conditions over fairly large areas (tens of km) around operations;

(e) sighting rates of marine mammals during periods with and without airgun activities (and other variables that could affect detectability), such as:

- Initial sighting distances versus airgun activity state;
- Closest point of approach versus airgun activity state;
- Observed behaviors and types of movements versus airgun activity state;
- Numbers of sightings/individuals seen versus airgun activity state;
- Distribution around the survey vessel versus airgun activity state; and
- Estimates of take by harassment;

(f) Reported results from all hypothesis tests should include estimates of the associated statistical power when practicable;

(g) Estimate and report uncertainty in all take estimates. Uncertainty could be expressed by the presentation of confidence limits, a minimum-maximum, posterior probability distribution, etc.; the exact approach would be selected based on the sampling method and data available;

(h) The report should clearly compare authorized takes to the level of actual estimated takes; and

(i) Methodology used to estimate marine mammal takes and relative abundance on towed PAM.

Notification of Injured or Dead Marine Mammals

In addition, NMFS would require SAE to notify NMFS' Office of Protected Resources and NMFS' Stranding Network within 48 hours of sighting an injured or dead marine mammal in the vicinity of marine survey operations. SAE shall provide NMFS with the species or description of the animal(s), the condition of the animal(s) (including carcass condition if the animal is dead), location, time of first discovery, observed behaviors (if alive), and photo or video (if available).

In the event that an injured or dead marine mammal is found by SAE that is not in the vicinity of the proposed open-water marine survey program, SAE would report the same information as listed above as soon as operationally feasible to NMFS.

Estimated Take by Incidental Harassment

Except with respect to certain activities not pertinent here, the MMPA defines ''harassment'' as: any act of pursuit, torment, or annoyance which (i) has the potential to injure a marine mammal or marine mammal stock in the wild [Level A harassment]; or (ii) has the potential to disturb a marine mammal or marine mammal stock in the wild by causing disruption of behavioral patterns, including, but not limited to, migration, breathing, nursing, breeding, feeding, or sheltering [Level B harassment]. Only take by Level B behavioral harassment is anticipated as a result of the proposed open water marine survey program. Anticipated impacts to marine mammals are associated with noise propagation from the survey airgun(s) used in the seismic surveys.

The full suite of potential impacts to marine mammals was described in detail in the ''Potential Effects of the Specified Activity on Marine Mammals'' section found earlier in this document. The potential effects of sound from the proposed open water marine survey programs might include one or more of the following: Masking of natural sounds; behavioral disturbance; non-auditory physical effects; and, at least in theory, temporary or permanent hearing impairment (Richardson *et al.* 1995). As discussed earlier in this document, the most common impact will likely be from behavioral disturbance, including avoidance of the ensonified area or changes in speed, direction, and/or diving profile of the animal. For reasons discussed previously in this document, hearing impairment (TTS and PTS) is highly unlikely to occur based on the proposed mitigation and monitoring measures that would preclude marine mammals from being exposed to noise levels high enough to cause hearing impairment.

For impulse sounds, such as those produced by airgun(s) used in the 3D OBC seismic surveys, NMFS uses the 160 dB (rms) re 1 μPa isopleth to indicate the onset of Level B harassment. SAE provided calculations for the 160-dB isopleths produced by the proposed seismic surveys and then used those isopleths to estimate takes by harassment. NMFS used the calculations to make the necessary MMPA preliminary findings. SAE provided a full description of the methodology used to estimate takes by harassment in its IHA application, which is also provided in the following sections.

Basis for Estimating ''Take by Harassment''

The estimate of the numbers of each species of marine mammals that could be ''taken'' by exposure to OBC seismic survey noise levels is determined by multiplying the maximum seasonal density of each species by the area that will be ensonified by greater than 160 dB (rms) re 1 μPa.

The areas ensonified by NMFS current Level B harassment exposure guideline levels was determined by assuming that the entire survey area is ensonified (given that the distance to the 160 dB isopleth during seismic survey is greater than the distance spacing between seismic source lines), plus a buffer area around the survey box corresponding to the distance to the 160 dB isopleth. The estimated distance to the 160 dB isopleth is 3 km (1.86 mi) based on a sound source of 236.55 dB (rms) re 1 μPa for the 1,760-in^3 seismic array and JASCO's spreading model of 18 log r + 0.0047 estimated for similar Beaufort nearshore waters (BP Liberty) by Aerts *et al.* (2008). Placing a 3 km buffer around the 995 km^2 (384 mi^2) seismic source area expands the ensonification (or Zone of Influence [ZOI]) area to approximately 1,476 km^2 (570 mi^2).

Within the 1,476 km^2 ensonified area, 10 percent (148 km^2) falls within the 0 to 1.5 m depth range, 25 percent (362 km^2) falls within the 1.5 to 5 m depth

range, 54 percent (793 km²) with the 5 to 15 m depth range, and 12 percent (177 km²) within waters greater than 15 m deep (bowhead migration corridor).

Marine Mammal Density Estimates

Density estimates were derived for bowhead whales, beluga whales, ringed seals, spotted seals, and bearded seals as described below. There are no available Beaufort Sea density estimates for gray whales, or extralimital species such as humpback whales, narwhals, and ribbon seals.

Bowhead Whale:

Summer density estimates for bowhead whales are based on surveys conducted by Brandon *et al.* (2011) in Harrison Bay during July and August of 2010. Their estimate, corrected for observer and availability bias (Thomas *et al.* 2002), was 0.004 whales per square kilometer. A maximum density (0.016/km²) was derived by multiplying this value by 4 to account for variability.

Fall density estimates were based on Clarke and Ferguson's (2010) summarization of the 2000–2009 Bowhead Whale Aerial Survey Program (BWASP) conducted annually by the Bureau of Ocean and Energy Management (BOEM). The center of the potential survey box occurs between 150⁰ and 151⁰ longitude, and the survey area occurs in waters between 1 and 20 meters deep. Based on these same locations and water depths, LAMA Ecological and OASIS Environmental (2011) applied Thomas *et al.*'s (2002) bias correction factors to the number of whales and transect survey effort from September (96 animals, 9,933 km) and October (42 animals, 6,143 km) summarized in Clarke and Ferguson (2010) and calculated a September density of 0.1381 whales/km² and an October density of 0.0977 whales/km². LAMA Ecological and OASIS Environmental (2011) also derived a mean density (0.1226 whales/km²) by averaging the September and October densities, and used the higher September value as the maximum density. Recognizing the validity of this approach, these same values are used in the calculations for this proposed IHA.

Beluga Whale:

The best data available for estimating summer beluga whale densities in the Alaskan Beaufort Sea is from Moore *et al.* (2000) based on aerial survey data collected 1982–1986. The best fall data is from Clarke *et al.*'s (2011) compilation of beluga records collected during the 2006–2008 BWASP surveys. Using these sighting records (summer 9; fall 7) and associated survey effort (summer 7,447 mi; fall 8,808 mi), average group size (summer 1.63, fall 2.9), and f(0) and g(0) values from Harwood *et al.* (1996), Shell Offshore, Inc. (2011), estimated summer and fall average density values for nearshore Beaufort Sea belugas. The estimates were multiplied by 4 to derive a maximum density.

Ringed Seal:

Surveys for ringed seals have been recently conducted in the Beaufort Sea by Kingsley (1986), Frost *et al.* (2002), Moulton and Lawson (2002), Green and Negri (2005), and Green *et al.* (2006, 2007). The shipboard monitoring surveys by Green and Negri (2005) and Green *et al.* (2006, 2007) were not systematically based, but are useful in estimating the general composition of pinnipeds in the Beaufort nearshore, including the Colville River Delta. Frost *et al.*'s aerial surveys were conducted during ice coverage and don't fully represent the summer and fall conditions under which the Beaufort surveys will occur. Moulton and Lawson (2002) conducted summer shipboard-based surveys for pinnipeds along the nearshore Beaufort Sea coast and developed seasonal average and maximum densities representative of SAE's Beaufort summer seismic project, while the Kingsley (1986) conducted surveys along the ice margin representing fall conditions.

Spotted Seal:

Green and Negri (2005) and Green *et al.* (2006, 2007) recorded pinnipeds during barging activity between West Dock and Cape Simpson, and found high numbers of ringed seal in Harrison Bay, and peaks in spotted seal numbers off the Colville River Delta where a haulout site is located. Approximately 5% of all phocid sightings recorded by Green and Negri (2005) and Green *et al.* (2006, 2007) were spotted seals, which provide a suitable estimate of the proportion of ringed seals versus spotted seals in the Colville River Delta and Harrison Bay. Thus, the estimated densities of spotted seals in the seismic survey area were derived by multiplying the ringed seal densities from Moulton and Lawson (2002) and Kingsley (1986) by 0.05.

Bearded Seal:

Bearded seals were also recorded in Harrison Bay and the Colville River Delta by Green and Negri (2005) and Green *et al.* (2006, 2007), but at lower proportions to ringed seals than spotted seals. However, estimating bearded seal densities based on the proportion of bearded seals observed during the barge-based surveys results in density estimates that appear unrealistically low given density estimates from other studies, especially given that nearby Thetis Island is used as a base for annually hunting this seal (densities are seasonally high enough for focused hunting). For protective purposes, the bearded seal density values used in this application are derived from Stirling *et al.*'s (1982) observations that the proportion of eastern Beaufort Sea bearded seals is 5 percent that of ringed seals, similar as was done for spotted seals.

Exposure Calculation Methods

The estimated potential harassment take of local marine mammals by SAE's Beaufort seismic project was determined by multiplying the animal densities with the area ensonified by seismic-generated noise greater than 160 dB (rms) re 1 μPa that constitutes habitat for each respective species. For pinnipeds, which occupy all water depths, this includes the entire seismic survey area plus the additional 3 km (1.86 mi) buffer of noise exceeding 160 dB, or 1,476 km² (570 mi²).

Although the vast majority of bowhead whales migrate through the Beaufort sea in waters greater than 15 m (50 ft) deep (Miller *et al.* 2002), feeding and migrating bowheads have been found in waters as shallow as 5 m (16 ft) (Clarke *et al.* 2011). Thus, the seismic survey area potentially inhabitable by bowhead whales is all waters greater than 5 m deep. This area, including the 3 km buffer, is 970 km² (375 mi²).

Beluga whales have been observed inside the barrier islands where they would have to traverse water depths as low as 1.8 meters, but these whales are unlikely to inhabit the shallowest water (<1.5 m deep) inside the barrier islands where stranding risk can be high. Therefore, the area of beluga habitat potentially ensonified (>160 dB) by the seismic operations is the waters greater than 1.5 m (5 ft) deep with the 3 km buffer, or approximately 1,332 km² (514 mi²).

Bowhead whale take estimates were calculated both for waters >5 and >15 m deep. Because the seismic surveys are expected to be operating 5 to 8 km south of the edge of the migration corridor by the time the fall migration commences, the fall exposure numbers (fall maximum of 24 whales) for waters greater than 15 m deep do not apply, and should be subtracted from the exposure estimate for waters greater than 5 m deep leaving an exposure estimate of 110 whales. However, even this fall maximum estimate is likely very protective given the fall density estimate is skewed by higher whale numbers in the deeper waters.

The take estimates also include species in which the estimated exposure is zero, but for which records for the

Alaskan Beaufort Sea occur (i.e., humpback whale, gray whale, narwhal, and ribbon seal).

The take estimates also do not account for mitigation measures that will be implemented including shutting down operations during the fall bowhead hunt (thereby avoiding any noise exposure during the peak of fall bowhead whale migration) and completing the seismic survey in waters greater than 15 m (50 ft) deep in August (thereby avoiding seismic survey within the bowhead whale migration corridor after the fall hunt). These measures, coupled with ramping up of airguns, should reduce the estimated take from seismic survey operations.

Potential Number of ''Take by Harassment''

As stated earlier, the estimates of potential Level B takes of marine mammals by noise exposure are based on a consideration of the number of marine mammals that might be present during operations in the Beaufort Sea and the anticipated area exposed to those sound pressure levels (SPLs) above 160 dB re 1 μPa for impulse sources (seismic airgun during 3D seismic surveys).

TABLE 3—ESTIMATED TAKE OF MARINE MAMMALS FROM THE PROPOSED SAE'S 3D OBC SEISMIC SURVEY IN THE BEAUFORT SEA DURING 2013 OPEN-WATER SEASON

Species	Population	Estimated take	Abundance	Percent population
Bowhead whale	Bering-Chukchi-Beaufort	126	10,545	1.19
Gray whale	Eastern North Pacific	2	19,126	0.01
Humpback whale	Western North Pacific	2	939	0.21
Beluga whale	Beaufort Sea	35	39,258	0.09
Narwhal	Baffin Bay	2	45,000	0.004
Ringed seal	Alaska	3,476	208,857	1.71
Bearded seal	Alaska	179	250,000	0.07
Spotted seal	Alaska	179	59,214	0.30
Ribbon seal	Alaska	2	49,000	0.004

Estimated Take Conclusions

Effects on marine mammals are generally expected to be restricted to avoidance of the area around the planned activities and short-term changes in behavior, falling within the MMPA definition of ''Level B harassment''.

Cetaceans—The take calculation estimates suggest a total of 126 bowhead whales may be exposed to sounds at or above 160 dB (rms) re 1 μPa (Table 3). This number is approximately 1.19% of the Bering-Chukchi-Beaufort (BCB) population of 10,545 assessed in 2001 (Allen and Angliss 2011) and is assuming to be increasing at an annual growth rate of 3.4% (Zeh and Punt 2005), which is supported by a 2004 population estimate of 12,631 by Koski *et al.* (2010). The total estimated number of beluga whales that may be exposed to sounds from the activities is 35 (Table 3). The small numbers of other whale species that may occur in the Beaufort Sea are unlikely to be present around the planned operations but chance encounters may occur. The few individuals would represent a very small proportion of their respective populations.

Pinnipeds—Ringed seal is by far the most abundant species expected to be encountered during the planned operations. The best estimate of the numbers of ringed seals exposed to sounds at the specified received levels during the planned activities is 3,476, which represent up to 1.71% of the Alaska population. Fewer individuals of other pinniped species are estimated to be exposed to sounds at Level B behavioral harassment level, also representing small proportions of their populations (Table 3).

Negligible Impact and Small Numbers Analysis and Preliminary Determination

As a preliminary matter, we typically include our negligible impact and small numbers analysis and determination under the same section heading of our **Federal Register** Notices. Despite co-locating these terms, we acknowledge that negligible impact and small numbers are distinct standards under the MMPA and treat them as such. The analysis presented below does not conflate the two standards; instead, each has been considered independently and we have applied the relevant factors to inform our negligible impact and small numbers determinations.

NMFS has defined ''negligible impact'' in 50 CFR 216.103 as ''. . . an impact resulting from the specified activity that cannot be reasonably expected to, and is not reasonably likely to, adversely affect the species or stock through effects on annual rates of recruitment or survival.'' In making a negligible impact determination, NMFS considers a variety of factors, including but not limited to: (1) The number of anticipated mortalities; (2) the number and nature of anticipated injuries; (3) the number, nature, intensity, and duration of Level B harassment; and (4) the context in which the takes occur.

No injuries or mortalities are anticipated to occur as a result of SAE's proposed 2013 open-water 3D OBC seismic survey in the Beaufort Sea, and none are proposed to be authorized. Additionally, animals in the area are not expected to incur hearing impairment (i.e., TTS or PTS) or non-auditory physiological effects. Takes will be limited to Level B behavioral harassment. Although it is possible that some individuals of marine mammals may be exposed to sounds from marine survey activities more than once, the expanse of these multi-exposures are expected to be less extensive since both the animals and the survey vessels will be moving constantly in and out of the survey areas.

Most of the bowhead whales encountered will likely show overt disturbance (avoidance) only if they receive airgun sounds with levels ≥ 160 dB re 1 μPa. Odontocete reactions to seismic airgun pulses are usually assumed to be limited to shorter distances from the airgun(s) than are those of mysticetes, probably in part because odontocete low-frequency hearing is assumed to be less sensitive than that of mysticetes. However, at least when in the Canadian Beaufort Sea in summer, belugas appear to be fairly responsive to seismic energy, with few being sighted within 6–12 mi (10–20 km) of seismic vessels during aerial surveys (Miller *et al.* 2005). Belugas will likely occur in small numbers in the Beaufort Sea during the survey period

and few will likely be affected by the survey activity.

As noted, elevated background noise level from the seismic airgun reverberant field could cause acoustic masking to marine mammals and reduce their communication space. However, even though the decay of the signal is extended, the fact that pulses are separated by approximately 8 to 10 seconds (or 4 to 5 seconds by two separate source vessels stationed 300 to 335 m (990 to 1,100 ft) apart) means that overall received levels at distance are expected to be much lower, thus resulting in less acoustic masking.

Taking into account the mitigation measures that are planned, effects on marine mammals are generally expected to be restricted to avoidance of a limited area around SAE's proposed open-water activities and short-term changes in behavior, falling within the MMPA definition of ''Level B harassment''. The many reported cases of apparent tolerance by cetaceans of seismic exploration, vessel traffic, and some other human activities show that co-existence is possible. Mitigation measures such as controlled vessel speed, dedicated marine mammal observers, non-pursuit, and shut downs or power downs when marine mammals are seen within defined ranges will further reduce short-term reactions and minimize any effects on hearing sensitivity. In all cases, the effects are expected to be short-term, with no lasting biological consequence.

Of the nine marine mammal species likely to occur in the proposed marine survey area, bowhead and humpback whales and ringed and bearded seals are listed as endangered or threatened under the ESA. These species are also designated as ''depleted'' under the MMPA. Despite these designations, the BCB stock of bowheads has been increasing at a rate of 3.4 percent annually for nearly a decade (Allen and Angliss 2010). Additionally, during the 2001 census, 121 calves were counted, which was the highest yet recorded. The calf count provides corroborating evidence for a healthy and increasing population (Allen and Angliss 2010). The occurrence of fin and humpback whales in the proposed marine survey areas is considered very rare. There is no critical habitat designated in the U.S. Arctic for the bowhead and humpback whales. The Alaska stock of bearded seals, part of the Beringia distinct population segment (DPS), and the Arctic stock of ringed seals, have recently been listed by NMFS as threatened under the ESA. None of the other species that may occur in the project area are listed as threatened or endangered under the ESA or designated as depleted under the MMPA.

Potential impacts to marine mammal habitat were discussed previously in this document (see the ''Anticipated Effects on Habitat'' section). Although some disturbance is possible to food sources of marine mammals, the impacts are anticipated to be minor enough as to not affect rates of recruitment or survival of marine mammals in the area. Based on the vast size of the Arctic Ocean where feeding by marine mammals occurs versus the localized area of the marine survey activities, any missed feeding opportunities in the direct project area would be minor based on the fact that other feeding areas exist elsewhere.

The estimated takes proposed to be authorized represent 0.09% of the Beaufort Sea population of approximately 39,258 beluga whales, 0.01% of the Eastern North Pacific stock of approximately 19,126 gray whales, 1.19% of the Bering-Chukchi-Beaufort population of 10,545 bowhead whales, 0.21% of the Western North Pacific stock of approximately 938 humpback whales, and 0.004% of the Baffin Bay stock of approximately 45,000 narwhals. The take estimates presented for ringed, bearded, spotted, and ribbon seals represent 1.71, 0.07, 0.30, and 0.004% of U.S. Arctic stocks of each species, respectively. The mitigation and monitoring measures (described previously in this document) proposed for inclusion in the IHA (if issued) are expected to reduce even further any potential disturbance to marine mammals.

In addition, no important feeding and reproductive areas are known in the vicinity of SAE's proposed seismic surveys at the time the proposed surveys are to take place. No critical habitat of ESA-listed marine mammal species occurs in the Beaufort Sea.

Based on the analysis contained herein of the likely effects of the specified activity on marine mammals and their habitat, and taking into consideration the implementation of the mitigation and monitoring measures, NMFS preliminarily finds that SAE's proposed 2013 open-water 3D OBC seismic surveys in the Beaufort Sea may result in the incidental take of small numbers of marine mammals, by Level B harassment only, and that the total taking from the marine surveys will have a negligible impact on the affected species or stocks.

Unmitigable Adverse Impact Analysis and Preliminary Determination

NMFS has preliminarily determined that SAE's proposed 2013 open-water 3D OBC seismic surveys in the Beaufort Sea will not have an unmitigable adverse impact on the availability of species or stocks for taking for subsistence uses. This preliminary determination is supported by information contained in this document and SAE's POC. SAE has adopted a spatial and temporal strategy for its Beaufort Sea open-water seismic surveys that should minimize impacts to subsistence hunters. Due to the timing of the project and the distance from the surrounding communities, it is anticipated to have no effects on spring harvesting and little or no effects on the occasional summer harvest of beluga whale, subsistence winter seal hunts, or the fall bowhead hunt.

In addition, based on the measures described in SAE's POC, the proposed mitigation and monitoring measures (described earlier in this document), and the project design itself, NMFS has determined preliminarily that there will not be an unmitigable adverse impact on subsistence uses from SAE's 2013 open-water 3D OBC seismic surveys in the Beaufort Sea.

Proposed Incidental Harassment Authorization

This section contains a draft of the IHA itself. The wording contained in this section is proposed for inclusion in the IHA (if issued).

(1) This Authorization is valid from July 15, 2013, through October 31, 2013.

(2) This Authorization is valid only for activities associated with open-water 3D seismic surveys and related activities in the Beaufort Sea. The specific areas where SAE's surveys will be conducted are within the Beaufort Sea, Alaska, as shown in Figure 1–1 of SAE's IHA application.

(3)(a) The species authorized for incidental harassment takings, Level B harassment only, are: Beluga whales (*Delphinapterus leucas*); narwhals (*Monodon monoceros*); bowhead whales (*Balaena mysticetus*); gray whales (*Eschrichtius robustus*); humpback whales (*Megaptera novaeangliae*); bearded seals (*Erignathus barbatus*); spotted seals (*Phoca largha*); ringed seals (*P. hispida*); and ribbon seals (*P. fasciata*).

(3)(b) The authorization for taking by harassment is limited to the following acoustic sources and from the following activities:

(i) 440-in^3, 880-in^3, and 1,760-in^3 airgun arrays and other acoustic sources for 3D open-water seismic surveys; and

(ii) Vessel activities related to open-water seismic surveys listed in (i).

(3)(c) The taking of any marine mammal in a manner prohibited under this Authorization must be reported within 24 hours of the taking to the Alaska Regional Administrator (907–586–7221) or his designee in Anchorage (907–271–3023), National Marine Fisheries Service (NMFS) and the Chief of the Permits and Conservation Division, Office of Protected Resources, NMFS, at (301) 427–8401, or his designee (301–427–8418).

(4) The holder of this Authorization must notify the Chief of the Permits and Conservation Division, Office of Protected Resources, at least 48 hours prior to the start of collecting seismic data (unless constrained by the date of issuance of this Authorization in which case notification shall be made as soon as possible).

(5) Prohibitions

(a) The taking, by incidental harassment only, is limited to the species listed under condition 3(a) above and by the numbers listed in Table 3. The taking by Level A harassment, injury or death of these species or the taking by harassment, injury or death of any other species of marine mammal is prohibited and may result in the modification, suspension, or revocation of this Authorization.

(b) The taking of any marine mammal is prohibited whenever the required source vessel protected species observers (PSOs), required by condition 7(a)(i), are not onboard in conformance with condition 7(a)(i) of this Authorization.

(6) Mitigation

(a) Establishing Exclusion and Disturbance Zones

(i) Establish and monitor with trained PSOs a preliminary exclusion zones for cetaceans surrounding the airgun array on the source vessel where the received level would be 180 dB (rms) re 1 μPa. For purposes of the field verification test, described in condition 7(e)(i), these radii are estimated to be 325, 494, and 842 m from the seismic source for the 440-in^3, 880-in^3, and 1,760-in^3 airgun arrays, respectively.

(ii) Establish and monitor with trained PSOs a preliminary exclusion zones for pinnipeds surrounding the airgun array on the source vessel where the received level would be 190 dB (rms) re 1 μPa. For purposes of the field verification test, described in condition 7(e)(i), these radii are estimated to be 126, 167, and 321 m from the seismic source for the 440-in^3, 880-in^3, and 1,760-in^3 airgun arrays, respectively.

(iii) Establish a zone of influence (ZOIs) for cetaceans and pinnipeds surrounding the airgun array on the source vessel where the received level would be 160 dB (rms) re 1 μPa. For purposes of the field verification test described in condition 7(e)(i), these radii are estimated to be 1,330, 1,500, and 2,990 m from the seismic source for the 440-in^3, 880-in^3, and 1,760-in^3 airgun arrays, respectively.

(iv) Immediately upon completion of data analysis of the field verification measurements required under condition 7(e)(i) below, the new 160-dB, 180-dB, and 190-dB marine mammal ZOIs and exclusion zones shall be established based on the sound source verification.

(b) Vessel Movement Mitigation:

(i) Avoid concentrations or groups of whales by all vessels under the direction of SAE. Operators of support vessels should, at all times, conduct their activities at the maximum distance possible from such concentrations of whales.

(ii) Vessels in transit shall be operated at speeds necessary to ensure no physical contact with whales occurs. If any vessel approaches within 1.6 km (1 mi) of observed bowhead whales, except when providing emergency assistance to whalers or in other emergency situations, the vessel operator will take reasonable precautions to avoid potential interaction with the bowhead whales by taking one or more of the following actions, as appropriate:

(A) Reducing vessel speed to less than 5 knots within 300 yards (900 feet or 274 m) of the whale(s);

(B) Steering around the whale(s) if possible;

(C) Operating the vessel(s) in such a way as to avoid separating members of a group of whales from other members of the group;

(D) Operating the vessel(s) to avoid causing a whale to make multiple changes in direction; and

(E) Checking the waters immediately adjacent to the vessel(s) to ensure that no whales will be injured when the propellers are engaged.

(iii) When weather conditions require, such as when visibility drops, adjust vessel speed accordingly to avoid the likelihood of injury to whales.

(c) Mitigation Measures for Airgun Operations

(i) Ramp-up:

(A) A ramp up, following a cold start, can be applied if the exclusion zone has been free of marine mammals for a consecutive 30-minute period. The entire exclusion zone must have been visible during these 30 minutes. If the entire exclusion zone is not visible, then ramp up from a cold start cannot begin.

(B) If a marine mammal(s) is sighted within the exclusion zone during the 30-minute watch prior to ramp up, ramp up will be delayed until the marine mammal(s) is sighted outside of the exclusion zone or the animal(s) is not sighted for at least 15–30 minutes: 15 minutes for pinnipeds, or 30 minutes for cetaceans.

(C) If, for any reason, electrical power to the airgun array has been discontinued for a period of 10 minutes or more, ramp-up procedures shall be implemented. Only if the PSO watch has been suspended, a 30-minute clearance of the exclusion zone is required prior to commencing ramp-up. Discontinuation of airgun activity for less than 10 minutes does not require a ramp-up.

(D) The seismic operator and PSOs shall maintain records of the times when ramp-ups start and when the airgun arrays reach full power.

(ii) Power-down/Shutdown:

(A) The airgun array shall be immediately powered down whenever a marine mammal is sighted approaching close to or within the applicable exclusion zone of the full array, but is outside the applicable exclusion zone of the single mitigation airgun.

(B) If a marine mammal is already within the exclusion zone when first detected, the airguns shall be powered down immediately.

(C) Following a power-down, firing of the full airgun array shall not resume until the marine mammal has cleared the exclusion. The animal will be considered to have cleared the exclusion zone if it is visually observed to have left the exclusion zone of the full array, or has not been seen within the zone for 15 minutes (pinnipeds) or 30 minutes (cetaceans).

(D) If a marine mammal is sighted within or about to enter the 190 or 180 dB (rms) applicable exclusion zone of the single mitigation airgun, the airgun array shall be shutdown.

(E) Firing of the full airgun array or the mitigation gun shall not resume until the marine mammal has cleared the exclusion zone of the full array or mitigation gun, respectively. The animal will be considered to have cleared the exclusion zone as described above under ramp up procedures.

(iii) Poor Visibility Conditions:

(A) If during foggy conditions, heavy snow or rain, or darkness, the full 180 dB exclusion zone is not visible, the airguns cannot commence a ramp-up procedure from a full shut-down.

(B) If one or more airguns have been operational before nightfall or before the onset of poor visibility conditions, they can remain operational throughout the night or poor visibility conditions. In this case ramp-up procedures can be

initiated, even though the exclusion zone may not be visible, on the assumption that marine mammals will be alerted by the sounds from the single airgun and have moved away.

(iv) Use of a Small-Volume Airgun during Turns and Transits

(A) Throughout the seismic survey, particularly during turning movements, and short transits, SAE will employ the use of the smallest volume airgun (i.e., ''mitigation airgun'') to deter marine mammals from being within the immediate area of the seismic operations. The mitigation airgun would be operated at approximately one shot per minute and would not be operated for longer than three hours in duration (turns may last two to three hours for the proposed project).

(B) During turns or brief transits (e.g., less than three hours) between seismic tracklines, one mitigation airgun will continue operating. The ramp-up procedure will still be followed when increasing the source levels from one airgun to the full airgun array. However, keeping one airgun firing will avoid the prohibition of a ''cold start'' during darkness or other periods of poor visibility. Through the use of this approach, seismic surveys using the full array may resume without the 30 minute observation period of the full exclusion zone required for a ''cold start''. PSOs will be on duty whenever the airguns are firing during daylight, during the 30 minute periods prior to ramp-ups.

(d) Mitigation Measures for Subsistence Activities:

(i) For the purposes of reducing or eliminating conflicts between subsistence whaling activities and SAE's survey program, the holder of this Authorization will participate with other operators in the Communication and Call Centers (Com-Center) Program. The Com-Centers will be operated 24 hours/day during the 2013 fall subsistence bowhead whale hunt.

(ii) The appropriate Com-Center shall be notified if there is any significant change in plans.

(iii) Upon notification by a Com-Center operator of an at-sea emergency, the holder of this Authorization shall provide such assistance as necessary to prevent the loss of life, if conditions allow the holder of this Authorization to safely do so.

(7) Monitoring:

(a) Vessel-based Visual Monitoring:

(i) Vessel-based visual monitoring for marine mammals shall be conducted by NMFS-approved protected species observers (PSOs) throughout the period of survey activities.

(ii) PSOs shall be stationed aboard the seismic survey vessels and mitigation vessel through the duration of the surveys.

(iii) A sufficient number of PSOs shall be onboard the survey vessel to meet the following criteria:

(A) 100% monitoring coverage during all periods of survey operations in daylight;

(B) maximum of 4 consecutive hours on watch per PSO; and

(C) maximum of 12 hours of watch time per day per PSO.

(iv) The vessel-based marine mammal monitoring shall provide the basis for real-time mitigation measures as described in (6)(c) above.

(v) Results of the vessel-based marine mammal monitoring shall be used to calculate the estimation of the number of ''takes'' from the marine surveys and equipment recovery and maintenance program.

(b) Protected Species Observers and Training

(i) PSO teams shall consist of Inupiat observers and NMFS-approved field biologists.

(ii) Experienced field crew leaders shall supervise the PSO teams in the field. New PSOs shall be paired with experienced observers to avoid situations where lack of experience impairs the quality of observations.

(iii) Crew leaders and most other biologists serving as observers in 2013 shall be individuals with experience as observers during recent seismic or shallow hazards monitoring projects in Alaska, the Canadian Beaufort, or other offshore areas in recent years.

(iv) Resumes for PSO candidates shall be provided to NMFS for review and acceptance of their qualifications. Inupiat observers shall be experienced in the region and familiar with the marine mammals of the area.

(v) All observers shall complete a NMFS-approved observer training course designed to familiarize individuals with monitoring and data collection procedures. The training course shall be completed before the anticipated start of the 2013 open-water season. The training session(s) shall be conducted by qualified marine mammalogists with extensive crew-leader experience during previous vessel-based monitoring programs.

(vi) Training for both Alaska native PSOs and biologist PSOs shall be conducted at the same time in the same room. There shall not be separate training courses for the different PSOs.

(vii) Crew members should not be used as primary PSOs because they have other duties and generally do not have the same level of expertise, experience, or training as PSOs, but they could be stationed on the fantail of the vessel to observe the near field, especially the area around the airgun array and implement a power down or shutdown if a marine mammal enters the safety zone (or exclusion zone).

(viii) If crew members are to be used as PSOs, they shall go through some basic training consistent with the functions they will be asked to perform. The best approach would be for crew members and PSOs to go through the same training together.

(ix) PSOs shall be trained using visual aids (e.g., videos, photos), to help them identify the species that they are likely to encounter in the conditions under which the animals will likely be seen.

(x) SAE shall train its PSOs to follow a scanning schedule that consistently distributes scanning effort according to the purpose and need for observations. All PSOs should follow the same schedule to ensure consistency in their scanning efforts.

(xi) PSOs shall be trained in documenting the behaviors of marine mammals. PSOs should simply record the primary behavioral state (i.e., traveling, socializing, feeding, resting, approaching or moving away from vessels) and relative location of the observed marine mammals.

(c) Marine Mammal Observation Protocol

(i) PSOs shall watch for marine mammals from the best available vantage point on the survey vessels, typically the bridge.

(ii) Observations by the PSOs on marine mammal presence and activity shall begin a minimum of 30 minutes prior to the estimated time that the seismic source is to be turned on and/or ramped-up.

(iii) PSOs shall scan systematically with the unaided eye and 7 x 50 reticle binoculars, supplemented with 20 x 60 image-stabilized binoculars or 25 x 150 binoculars, and night-vision equipment when needed.

(iv) Personnel on the bridge shall assist the marine mammal observer(s) in watching for marine mammals.

(v) PSOs aboard the marine survey vessel shall give particular attention to the areas within the marine mammal exclusion zones around the source vessel, as noted in (6)(a)(i) and (ii). They shall avoid the tendency to spend too much time evaluating animal behavior or entering data on forms, both of which detract from their primary purpose of monitoring the exclusion zone.

(vi) Monitoring shall consist of recording of the following information:

(A) the species, group size, age/size/sex categories (if determinable), the

general behavioral activity, heading (if consistent), bearing and distance from seismic vessel, sighting cue, behavioral pace, and apparent reaction of all marine mammals seen near the seismic vessel and/or its airgun array (e.g., none, avoidance, approach, paralleling, etc);

(B) the time, location, heading, speed, and activity of the vessel (shooting or not), along with sea state, visibility, cloud cover and sun glare at (I) any time a marine mammal is sighted (including pinnipeds hauled out on barrier islands), (II) at the start and end of each watch, and (III) during a watch (whenever there is a change in one or more variable);

(C) the identification of all vessels that are visible within 5 km of the seismic vessel whenever a marine mammal is sighted and the time observed;

(D) any identifiable marine mammal behavioral response (sighting data should be collected in a manner that will not detract from the PSO's ability to detect marine mammals);

(E) any adjustments made to operating procedures; and

(F) visibility during observation periods so that total estimates of take can be corrected accordingly.

(vii) Distances to nearby marine mammals will be estimated with binoculars (7 x 50 binoculars) containing a reticle to measure the vertical angle of the line of sight to the animal relative to the horizon. Observers may use a laser rangefinder to test and improve their abilities for visually estimating distances to objects in the water.

(viii) PSOs shall understand the importance of classifying marine mammals as ''unknown'' or ''unidentified'' if they cannot identify the animals to species with confidence. In those cases, they shall note any information that might aid in the identification of the marine mammal sighted. For example, for an unidentified mysticete whale, the observers should record whether the animal had a dorsal fin.

(ix) Additional details about unidentified marine mammal sightings, such as ''blow only'', mysticete with (or without) a dorsal fin, ''seal splash'', etc., shall be recorded.

(x) When a marine mammal is seen approaching or within the exclusion zone applicable to that species, the marine survey crew shall be notified immediately so that mitigation measures described in (6) can be promptly implemented.

(xi) SAE shall use the best available technology to improve detection capability during periods of fog and other types of inclement weather. Such technology might include night-vision goggles or binoculars as well as other instruments that incorporate infrared technology.

(d) Field Data-Recording and Verification

(A) PSOs aboard the vessels shall maintain a digital log of seismic surveys, noting the date and time of all changes in seismic activity (ramp-up, power-down, changes in the active seismic source, shutdowns, etc.) and any corresponding changes in monitoring radii in a software spreadsheet.

(B) PSOs shall utilize standardized format to record all marine mammal observations and mitigation actions (seismic source power-downs, shut-downs, and ramp-ups).

(C) Information collected during marine mammal observations shall include the following:

(I) Vessel speed, position, and activity
(II) Date, time, and location of each marine mammal sighting
(III) Number of marine mammals observed, and group size, sex, and age categories
(IV) Observer's name and contact information
(V) Weather, visibility, and ice conditions at the time of observation
(VI) Estimated distance of marine mammals at closest approach
(VII) Activity at the time of observation, including possible attractants present
(VIII) Animal behavior
(IX) Description of the encounter
(X) Duration of encounter
(XI) Mitigation action taken

(D) Data shall be recorded directly into handheld computers or as a back-up, transferred from hard-copy data sheets into an electronic database.

(E) A system for quality control and verification of data shall be facilitated by the pre-season training, supervision by the lead PSOs, in-season data checks, and shall be built into the software.

(F) Computerized data validity checks shall also be conducted, and the data shall be managed in such a way that it is easily summarized during and after the field program and transferred into statistical, graphical, or other programs for further processing.

(e) Passive Acoustic Monitoring

(i) Sound Source Measurements: Using a hydrophone system, the holder of this Authorization is required to conduct sound source verification tests for seismic airgun array(s) and other marine survey equipment that are involved in the open-water seismic surveys.

(A) Sound source verification shall consist of distances where broadside and endfire directions at which broadband received levels reach 190, 180, 170, and 160 dB (rms) re 1 μPa for the airgun array(s). The configurations of airgun arrays shall include at least the full array and the operation of a single source that will be used during power downs.

(B) The test results shall be reported to NMFS within 5 days of completing the test.

(ii) Passive Acoustic Monitoring (PAM)

(A) SAE shall conduct passive acoustic monitoring using fixed hydrophone(s) to (I) collect information on the occurrence and distribution of marine mammals (including beluga whale, bowhead whale, walrus and other species) that may be available to subsistence hunters near villages located on the Beaufort Sea coast and to document their relative abundance, habitat use, and migratory patterns; and (II) measure the ambient soundscape throughout the Beaufort Sea coast and to record received levels of sounds from industry and other activities.

(f) Pinniped Surveys Before, During and After Seismic Surveys

(i) SAE shall conduct a pinniped survey in the proposed seismic survey area before, during, and after the seismic surveys to provide a basis for determining whether ringed and bearded seals alter their habitat use patterns during the seismic survey.

(ii) The design of the pinniped survey will focus on resident ringed and spotted seals, spotted seal haul out use in the Colville River delta.

(g) SAE shall engage in consultation and coordination with other oil and gas companies and with federal, state, and borough agencies to ensure that they have the most up-to-date information and can take advantage of other monitoring efforts; and

(8) Data Analysis and Presentation in Reports:

(a) Estimation of potential takes or exposures shall be improved for times with low visibility (such as during fog or darkness) through interpolation or possibly using a probability approach. Those data could be used to interpolate possible takes during periods of restricted visibility.

(b) SAE shall provide a database of the information collected, plus a number of summary analyses and graphics to help NMFS assess the potential impacts of their survey. Specific summaries/analyses/graphics would include:

(i) sound verification results including isopleths of sound pressure levels plotted geographically;

(ii) a table or other summary of survey activities (i.e., did the survey proceed as planned);

(iii) a table of sightings by time, location, species, and distance from the survey vessel;

(iv) a geographic depiction of sightings for each species by area and month;

(v) a table and/or graphic summarizing behaviors observed by species;

(vi) a table and/or graphic summarizing observed responses to the survey by species;

(vii) a table of mitigation measures (e.g., powerdowns, shutdowns) taken by date, location, and species;

(viii) a graphic of sightings by distance for each species and location;

(ix) a table or graphic illustrating sightings during the survey versus sightings when the airguns were silent; and

(x) a summary of times when the survey was interrupted because of interactions with marine mammals.

(c) To help evaluate the effectiveness of PSOs and more effectively estimate take, if appropriate data are available, SAE shall perform analysis of sightability curves (detection functions) for distance-based analyses.

(d) SAE shall collaborate with other organizations operating in the Beaufort Sea and share visual and acoustic data to improve understanding of impacts from single and multiple operations and efficacy of mitigation measures.

(9) Reporting:

(a) Sound Source Verification Report: A report on the preliminary results of the sound source verification measurements, including the measured 190, 180, and 160 dB (rms) radii of the airgun sources and other acoustic survey equipment, shall be submitted within 14 days after collection of those measurements at the start of the field season. This report will specify the distances of the exclusion zones that were adopted for the survey.

(b) Throughout the survey program, PSOs shall prepare a report each day or at such other intervals, summarizing the recent results of the monitoring program. The reports shall summarize the species and numbers of marine mammals sighted. These reports shall be provided to NMFS.

(c) Seismic Vessel Monitoring Program: A draft report will be submitted to the Director, Office of Protected Resources, NMFS, within 90 days after the end of SAE's 2013 open-water seismic surveys in the Beaufort Sea. The report will describe in detail:

(i) summaries of monitoring effort (e.g., total hours, total distances, and marine mammal distribution through the study period, accounting for sea state and other factors affecting visibility and detectability of marine mammals);

(ii) analyses of the effects of various factors influencing detectability of marine mammals (e.g., sea state, number of observers, and fog/glare);

(iii) species composition, occurrence, and distribution of marine mammal sightings, including date, water depth, numbers, age/size/gender categories (if determinable), group sizes, and ice cover;

(iv) to better assess impacts to marine mammals, data analysis should be separated into periods when an airgun array (or a single airgun) is operating and when it is not. Final and comprehensive reports to NMFS should summarize and plot: (A) Data for periods when a seismic array is active and when it is not; and (B) The respective predicted received sound conditions over fairly large areas (tens of km) around operations.

(v) sighting rates of marine mammals during periods with and without airgun activities (and other variables that could affect detectability), such as: (A) initial sighting distances versus airgun activity state; (B) closest point of approach versus airgun activity state; (C) observed behaviors and types of movements versus airgun activity state; (D) numbers of sightings/individuals seen versus airgun activity state; (E) distribution around the survey vessel versus airgun activity state; and (F) estimates of take by harassment.

(vi) reported results from all hypothesis tests should include estimates of the associated statistical power when practicable.

(vii) estimate and report uncertainty in all take estimates. Uncertainty could be expressed by the presentation of confidence limits, a minimum-maximum, posterior probability distribution, etc.; the exact approach would be selected based on the sampling method and data available.

(viii) The report should clearly compare authorized takes to the level of actual estimated takes.

(d) The draft report shall be subject to review and comment by NMFS. Any recommendations made by NMFS must be addressed in the final report prior to acceptance by NMFS. The draft report will be considered the final report for this activity under this Authorization if NMFS has not provided comments and recommendations within 90 days of receipt of the draft report.

(10) (a) In the unanticipated event that survey operations clearly cause the take of a marine mammal in a manner prohibited by this Authorization, such as an injury (Level A harassment), serious injury or mortality (e.g., ship-strike, gear interaction, and/or entanglement), SAE shall immediately cease survey operations and immediately report the incident to the Supervisor of the Incidental Take Program, Permits and Conservation Division, Office of Protected Resources, NMFS, at 301–427–8401 and/or by email to *Jolie.Harrison@noaa.gov* and *Shane.Guan@noaa.gov* and the Alaska Regional Stranding Coordinators (*Aleria.Jensen@noaa.gov* and *Barbara.Mahoney@noaa.gov*). The report must include the following information:

(i) time, date, and location (latitude/longitude) of the incident;

(ii) the name and type of vessel involved;

(iii) the vessel's speed during and leading up to the incident;

(iv) description of the incident;

(v) status of all sound source use in the 24 hours preceding the incident;

(vi) water depth;

(vii) environmental conditions (e.g., wind speed and direction, Beaufort sea state, cloud cover, and visibility);

(viii) description of marine mammal observations in the 24 hours preceding the incident;

(ix) species identification or description of the animal(s) involved;

(x) the fate of the animal(s); and

(xi) photographs or video footage of the animal (if equipment is available).

Activities shall not resume until NMFS is able to review the circumstances of the prohibited take. NMFS shall work with SAE to determine what is necessary to minimize the likelihood of further prohibited take and ensure MMPA compliance. SAE may not resume their activities until notified by NMFS via letter, email, or telephone.

(b) In the event that SAE discovers an injured or dead marine mammal, and the lead PSO determines that the cause of the injury or death is unknown and the death is relatively recent (i.e., in less than a moderate state of decomposition as described in the next paragraph), SAE will immediately report the incident to the Supervisor of the Incidental Take Program, Permits and Conservation Division, Office of Protected Resources, NMFS, at 301–427–8401, and/or by email to *Jolie.Harrison@noaa.gov* and *Shane.Guan@noaa.gov* and the NMFS Alaska Stranding Hotline (1–877–925–7773) and/or by email to the Alaska Regional Stranding Coordinators (*Aleria.Jensen@noaa.gov* and *Barabara.Mahoney@noaa.gov*). The report must include the same

information identified in Condition 10(a) above. Activities may continue while NMFS reviews the circumstances of the incident. NMFS will work with SAE to determine whether modifications in the activities are appropriate.

(c) In the event that SAE discovers an injured or dead marine mammal, and the lead PSO determines that the injury or death is not associated with or related to the activities authorized in Condition 3 of this Authorization (e.g., previously wounded animal, carcass with moderate to advanced decomposition, or scavenger damage), SAE shall report the incident to the Supervisor of the Incidental Take Program, Permits and Conservation Division, Office of Protected Resources, NMFS, at 301–427–8401, and/or by email to *Jolie.Harrison@noaa.gov* and *Shane.Guan@noaa.gov* and the NMFS Alaska Stranding Hotline (1–877–925–7773) and/or by email to the Alaska Regional Stranding Coordinators (*Aleria.Jensen@noaa.gov* and *Barbara.Mahoney@noaa.gov*), within 24 hours of the discovery. SAE shall provide photographs or video footage (if available) or other documentation of the stranded animal sighting to NMFS and the Marine Mammal Stranding Network. SAE can continue its operations under such a case.

(11) Activities related to the monitoring described in this Authorization do not require a separate scientific research permit issued under section 104 of the Marine Mammal Protection Act.

(12) The Plan of Cooperation outlining the steps that will be taken to cooperate and communicate with the native communities to ensure the availability of marine mammals for subsistence uses, must be implemented.

(13) This Authorization may be modified, suspended or withdrawn if the holder fails to abide by the conditions prescribed herein or if the authorized taking is having more than a negligible impact on the species or stock of affected marine mammals, or if there is an unmitigable adverse impact on the availability of such species or stocks for subsistence uses.

(14) A copy of this Authorization and the Incidental Take Statement must be in the possession of each seismic vessel operator taking marine mammals under the authority of this Incidental Harassment Authorization.

(15) SAE is required to comply with the Terms and Conditions of the Incidental Take Statement corresponding to NMFS' Biological Opinion.

Endangered Species Act (ESA)

The bowhead and humpback whales and ringed and bearded seals are the only marine mammal species currently listed as endangered or threatened under the ESA that could occur during SAE's proposed seismic surveys during the Arctic open-water season. NMFS' Permits and Conservation Division has initiated consultation with NMFS' Protected Resources Division under section 7 of the ESA on the issuance of an IHA to SAE under section 101(a)(5)(D) of the MMPA for this activity. Consultation will be concluded prior to a determination on the issuance of an IHA.

National Environmental Policy Act (NEPA)

NMFS is currently preparing an Environmental Assessment, pursuant to NEPA, to determine whether or not this proposed activity may have a significant effect on the human environment. This analysis will be completed prior to the issuance or denial of the IHA.

Proposed Authorization

As a result of these preliminary determinations, NMFS proposes to authorize the take of marine mammals incidental to SAE's 2013 open-water 3D OBC seismic surveys in the Alaskan Beaufort Sea, provided the previously mentioned mitigation, monitoring, and reporting requirements are incorporated.

Dated: June 10, 2013.

Donna S. Wieting,

Director, Office of Protected Resources, National Marine Fisheries Service.

[FR Doc. 2013–14188 Filed 6–11–13; 4:15 pm]

BILLING CODE 3510–22–P

COMMITTEE FOR PURCHASE FROM PEOPLE WHO ARE BLIND OR SEVERELY DISABLED

Procurement List; Additions and Deletions; Clarification

AGENCY: Committee for Purchase From People Who Are Blind or Severely Disabled.

ACTION: Notice.

SUMMARY: The Committee for Purchase From People Who Are Blind or Severely Disabled (Committee) is providing supplementary information to its Notice in the **Federal Register** of May 10, 2013.

FOR FURTHER INFORMATION CONTACT: Barry S. Lineback, Director, Business Operations, 1421 Jefferson Davis Highway, Jefferson Plaza II, Suite 10800, Arlington, VA, Telephone: (703) 603–2118; FAX 703–603–0655 or email *CMTEFedReg@abilityone.gov*.

SUPPLEMENTARY INFORMATION: The Committee's Notice in the **Federal Register** of Friday, May 10, 2013 (77 FR 27369), concerning additions to the Procurement List, specified NSN: 7930–00–NIB–0644—Cleaning Pad, Melamine Foam, White, 4″ x 1.5″ x 4″. This Notice is to clarify that the actual size of the Cleaning Pad, Melamine Foam, White that was added to the Procurement List is 4″ x 2.63″ x 1.38″.

Interested parties may submit comments pertaining to the Cleaning Pad, Melamine Foam, White, 4″ x 2.63″ x 1.38″ for the Committee's consideration no later than 5 p.m. on June 28, 2013. Comments received after this date will not be considered. Comments should be submitted to Barry S. Lineback at the address above.

Dated: June 10, 2013.

Barry S. Lineback,

Director, Business Operations.

[FR Doc. 2013–14170 Filed 6–13–13; 8:45 am]

BILLING CODE 6353–01–P

COMMITTEE FOR PURCHASE FROM PEOPLE WHO ARE BLIND OR SEVERELY DISABLED

Procurement List; Proposed Additions

AGENCY: Committee for Purchase From People Who Are Blind or Severely Disabled.

ACTION: Proposed Additions to the Procurement List.

SUMMARY: The Committee is proposing to add products and a service to the Procurement List that will be furnished by nonprofit agencies employing persons who are blind or have other severe disabilities.

DATES: *Comments Must Be Received on or Before:* 7/15/2013.

ADDRESSES: Committee for Purchase From People Who Are Blind or Severely Disabled, 1401 S. Clark Street, Suite 10800, Arlington, Virginia, 22202–4149.

FOR FURTHER INFORMATION OR TO SUBMIT COMMENTS CONTACT: Barry S. Lineback, Telephone: (703) 603–7740, Fax: (703) 603–0655, or email *CMTEFedReg@AbilityOne.gov*.

SUPPLEMENTARY INFORMATION: This notice is published pursuant to 41 U.S.C. 8503(a)(2) and 41 CFR 51–2.3. Its purpose is to provide interested persons an opportunity to submit comments on the proposed actions.

Additions

If the Committee approves the proposed additions, the entities of the

Federal Government identified in this notice will be required to procure the products and service listed below from nonprofit agencies employing persons who are blind or have other severe disabilities.

The following products and service are proposed for addition to the Procurement List for production by the nonprofit agencies listed:

Products

Cover, Certificate-Document, Gold Foil Stamped

NSN: 7510–01–519–5770—Black
NSN: 7510–01–519–5771—Blue
NPA: Dallas Lighthouse for the Blind, Inc., Dallas, TX
Contracting Activity: General Services Administration, New York, NY Coverage: A-List for the Total Government Requirement as aggregated by the General Services Administration.

NSN: 7110–00–NIB–0077—Work/Plan Kit, Magnetic, 3′ x 2′
NSN: 7110–00–NIB–0078—Work/Plan Kit, Magnetic, 4′ x 3′
NSN: 7110–00–NIB–0079—Work/Plan Kit, Magnetic, 6′ x 4′
NSN: 7110–00–NIB–0081—White Board, Subtle Grid, 3′ x 2′
NSN: 7110–00–NIB–0082—White Board, Subtle Grid, 4′ x 3′
NSN: 7110–00–NIB–0083—White Board, Subtle Grid, 2′ x 1.5′
NSN: 7110–00–NIB–0084—White Board, Subtle Grid, 3′ x 2′
NSN: 7110–00–NIB–0085—White Board, Subtle Grid, 4′ x 3′
NSN: 7110–00–NIB–0086—White Board, Subtle Grid, 6′ x 4′
NSN: 7110–00–NIB–0087—White Board, Cubicle, Aluminum, 14″ x 11″
NSN: 7110–00–NIB–2200—Calendar, Four-Month, Aluminum, 4′ x 3′
NSN: 7195–00–NIB–0040—Bulletin Board, Cubicle Cork, Aluminum, 24″ x 14″
NPA: The Lighthouse for the Blind, Inc. (Seattle Lighthouse), Seattle, WA
Contracting Activity: General Services Administration, FSS Household and Industrial Furniture, Arlington, VA
Coverage: A-List for the Total Government Requirement as aggregated by the General Services Administration.
NSN: 7510–00–NIB–9905—Self Stick Rectangular Flag, 1″ x 1.7″, Bright Blue
NPA: Association for the Blind and Visually Impaired—Goodwill Industries of Greater Rochester, Rochester, NY
Contracting Activity: General Services Administration, New York, NY
Coverage: A-List for the Total Government Requirement as aggregated by the General Services Administration.

File Jackets, Letter and Legal, Manila

NSN: 7530–00–NIB–1077—Letter, Straight Tab Cut
NSN: 7530–00–NIB–1078—Letter, Straight Tab Cut, 1″ Expansion
NSN: 7530–00–NIB–1079—Letter, Straight Tab Cut, 1.5″ Expansion
NSN: 7530–00–NIB–1080—Letter, Straight Tab Cut, 2″ Expansion
NSN: 7530–00–NIB–1081—Legal, Straight Tab Cut
NSN: 7530–00–NIB–1082—Legal, Straight Tab Cut, 1″ Expansion
NSN: 7530–00–NIB–1083—Legal, Straight Tab Cut, 1.5″ Expansion
NSN: 7530–00–NIB–1084—Legal, Straight Tab Cut, 2″ Expansion
NPA: Association for Vision Rehabilitation and Employment, Inc., Binghamton, NY
Contracting Activity: General Services Administration, New York, NY
Coverage: A-List for the Total Government Requirement as aggregated by the General Services Administration.

NSN: 7530–01–364–9489—Tabs, Multicolor, Numerical, 1–5
NSN: 7530–00–NIB–1120—Tabs, Multicolor, Numerical, 1–12
NSN: 7530–01–407–2250—Tabs, Legal, Clear, Numerical, 1–25
NSN: 7530–01–407–2248—Tabs, Legal, Clear, Numerical, 26–50
NPA: South Texas Lighthouse for the Blind, Corpus Christi, TX
Contracting Activity: General Services Administration, New York, NY
Coverage: A-List for the Total Government Requirement as aggregated by the General Services Administration.

NSN: MR 10609—Bowl, Insulated Thermal, Toddler, 8oz
NSN: MR 10626—Poster Book, Coloring, Assorted, 36 x 42
NSN: MR 10629—Scrub Stone, Grill Cleaner
NPA: Winston-Salem Industries for the Blind, Inc., Winston-Salem, NC
Contracting Activity: Defense Commissary Agency, Fort Lee, VA
Coverage: C-List For The Requirements Of Military Commissaries And exchanges as aggregated by the Defense Commissary Agency.

Service

Service Type: Procurement Portal Service
Service Location: Federal Bureau of Prisons, Washington, DC
NPA: Industries for the Blind, Inc., West Allis, Wisconsin
Contracting Activity: Federal Bureau of Prisons, Washington, DC

Barry S. Lineback,

Director, Business Operations.

[FR Doc. 2013–14149 Filed 6–13–13; 8:45 am]

BILLING CODE 6353–01–P

PRODUCT SAFETY COMMISSION

[Docket No. CPSC–2009–0092]

Proposed Extension of Approval of Information Collection; Comment Request: Clothing Textiles, Vinyl Plastic Film

AGENCY: Consumer Product Safety Commission.

ACTION: Notice.

SUMMARY: As required by the Paperwork Reduction Act of 1995 (44 U.S.C. chapter 35), the Consumer Product Safety Commission (CPSC or Commission) requests comments on a proposed request for extension of approval of a collection of information from manufacturers and importers of clothing, textiles and related materials intended for use in clothing under the Standard for the Flammability of Clothing Textiles (16 CFR part 1610) and the Standard for the Flammability of Vinyl Plastic Film (16 CFR part 1611). These regulations establish requirements for testing and recordkeeping for manufacturers and importers who furnish guaranties for products subject to these standards. The Office of Management and Budget (OMB) previously approved the collection of information under control number 3041–0024. OMB's most recent extension of approval will expire on August 31, 2013. The Commission will consider all comments received in response to this notice before requesting an extension of approval of this collection of information from OMB.

DATES: The Office of the Secretary must receive comments not later than August 13, 2013.

ADDRESSES: You may submit comments, identified by Docket No. CPSC–2009–0092, by any of the following methods:

Electronic Submissions: Submit electronic comments to the Federal eRulemaking Portal at: *http://www.regulations.gov*. Follow the instructions for submitting comments. The Commission does not accept comments submitted by electronic mail (email), except through *www.regulations.gov*. The Commission encourages you to submit electronic comments by using the Federal eRulemaking Portal, as described above.

Written Submissions: Submit written submissions in the following way: Mail/Hand delivery/Courier (for paper, disk, or CD–ROM submissions), preferably in five copies, to: Office of the Secretary, Consumer Product Safety Commission, Room 820, 4330 East West Highway, Bethesda, MD 20814; telephone (301) 504–7923.

Instructions: All submissions received must include the agency name and docket number for this notice. All comments received may be posted without change, including any personal identifiers, contact information, or other personal information provided, to: *http://www.regulations.gov*. Do not submit confidential business information, trade secret information, or other sensitive or protected information that you do not want to be available to the public. If furnished at all, such information should be submitted in writing.

Docket: For access to the docket to read background documents or comments received, go to: *http://www.regulations.gov,* and insert the docket number, CPSC–2009–0092, into the ''Search'' box, and follow the prompts.

FOR FURTHER INFORMATION CONTACT: For further information contact: Robert H. Squibb, Consumer Product Safety Commission, 4330 East West Highway, Bethesda, MD 20814; (301) 504–7815, or by email to: *rsquibb@cpsc.gov.*

SUPPLEMENTARY INFORMATION:

A. Background

Clothing and fabrics intended for use in clothing (except children's sleepwear in sizes 0 through 14) are subject to the Standard for the Flammability of Clothing Textiles (16 CFR part 1610). Clothing made from vinyl plastic film and vinyl plastic film intended for use in clothing (except children's sleepwear in sizes 0 through 14) are subject to the Standard for the Flammability of Vinyl Plastic Film (16 CFR part 1611). These standards prescribe a test to assure that articles of wearing apparel, and fabrics and film intended for use in wearing apparel, are not dangerously flammable because of rapid and intense burning. (Children's sleepwear and fabrics and related materials intended for use in children's sleepwear in sizes 0 through 14 are subject to other, more stringent flammability standards codified at 16 CFR parts 1615 and 1616.) The flammability standards for clothing textiles and vinyl plastic film were made mandatory by the Flammable Fabrics Act of 1953 (FFA) (Pub. L. 83–88, 67 Stat. 111; June 30, 1953).

Section 8 of the FFA (15 U.S.C. 1197) provides that a person who receives a guaranty in good faith that a product complies with an applicable flammability standard is not subject to criminal prosecution for a violation of the FFA resulting from the sale of any product covered by the guaranty. The Commission uses the information compiled and maintained by firms that issue these guaranties to help protect the public from risks of injury or death associated with clothing and fabrics and vinyl film intended for use in clothing. In addition, the information helps the Commission arrange corrective actions if any products covered by a guaranty fail to comply with the applicable standard in a manner that creates a substantial risk of injury or death to the public. Section 8 of the FFA requires that a guaranty must be based on ''reasonable and representative tests.'' The testing and recordkeeping requirements by firms that issue guaranties are set forth under 16 CFR part 1610, subpart B, and 16 CFR part 1611, subpart B.

B. Burden Hours

The Commission estimates that approximately 1,000 manufacturers and importers of garments, textiles, and related materials issue guaranties. The Commission estimates that the flammability standards for clothing textiles and vinyl plastic film and enforcement regulations impose an average annual burden of about 101.6 hours on each of those firms. That burden will result from conducting the testing required by the regulations and maintaining records of the results of that testing. The total annual burden imposed by the flammability standards for clothing textiles and vinyl plastic film and enforcement regulations on manufacturers and importers of garments, fabrics, and related materials is about 101,600 hours.

The hourly wage for the testing and recordkeeping required by the standards is about $61.06 (for management, professional, and related occupations in goods-producing industries, Bureau of Labor Statistics, December 2012), for an estimated annual cost to the industry of approximately $6.2 million (101,600 × $61.06).

The estimated annual cost of the information collection requirements to the federal government is approximately $3,264, which includes 80 staff hours to examine and evaluate the information as needed for Compliance activities. This is based on a GS–12 level salaried employee. The average hourly wage rate for a mid-level salaried GS–12 employee in the Washington, DC metropolitan area (effective as of January 2011) is $40.80 (GS–12, step 5). This represents 69.5 percent of total compensation (U.S. Bureau of Labor Statistics, ''Employer Costs for Employee Compensation,'' December 2012, Table 1, percentage of wages and salaries for all civilian management, professional, and related employees: *http://www.bls.gov/ncs/*). Adding an additional 30.5 percent for benefits brings average hourly compensation for a mid-level salaried GS–12 employee to $58.70.

C. Request for Comments

The Commission solicits written comments from all interested persons about the proposed collection of information. The Commission specifically solicits information relevant to the following topics:

—Whether the collection of information described above is necessary for the proper performance of the Commission's functions, including whether the information would have practical utility;

—Whether the estimated burden of the proposed collection of information is accurate;

—Whether the quality, utility, and clarity of the information to be collected could be enhanced; and

—Whether the burden imposed by the collection of information could be minimized by use of automated, electronic or other technological collection techniques, or other forms of information technology.

Dated: June 11, 2013.

Todd A. Stevenson,

Secretary, Consumer Product Safety Commission.

[FR Doc. 2013–14171 Filed 6–13–13; 8:45 am]

BILLING CODE 6355–01–P

DEPARTMENT OF DEFENSE

Office of the Secretary

Notice of Intent To Seek Public and Private Organizations, Associations, and Other Entities Which Are Working on the West, East, and North Coasts of Africa in the Maritime Domain Sector To Participate as Military Exercise Observers in Order To Enhance U.S. Military and Host Nation Maritime Security Forces' Exercise Fidelity and Effectiveness, and To Improve Maritime Domain Awareness

AGENCY: United States Africa Command (USAFRICOM), DOD.

ACTION: Notice of intent to obtain expressions of interest from organizations active on the West, East, and North Coasts of Africa for the purpose of information sharing.

SUMMARY: This notice announces that the U.S. Africa Command (USAFRICOM) is seeking information about, and expressions of interest by, organizations, associations, and other entities, both public and private, which are currently working on the West, East, and North Coasts of Africa in the areas of maritime domain awareness and maritime security. This information and expressions of interest in observing the aforementioned exercises is being solicited to inform USAFRICOM and African Host Nations of potential public and private sector capability to improve maritime security. It is expected that these private entities will enrich the exercises planned in Africa concerning maritime awareness and maritime security on the West, East, and North coasts of Africa.

DATES: Submission of information is continuous on or before December 31, 2014.

ADDRESSES: Entities wishing to inform USAFRICOM of their work in Africa and their interest in sharing information and observing a maritime domain awareness exercise on the West, East, South and North Coasts of Africa in order to enhance USAFRICOM exercises may email *africom.stuttgart.acj95.list.ppp-branch-mba@mail.mil* or Ms. Stefanie Perkowski at *Stefanie.c.perkowski.civ@mail.mil* or call +49 711 729 4545 or Mr. Richard Parker at *Richard.a.parker26.civ@mail.mil* or call +49 711 729 2000 or write Attn: Branch Chief, Public Private Partnerships, Plieninger Strasse 289, Stuttgart Moehringen, 70567. Additional instructions will be provided after contact.

FOR FURTHER INFORMATION CONTACT: AFRICOM J9—Outreach Directorate, +49 711–729–3260 LtCol James Hensien or email *james.r.hensien.mil@mail.mil*.

SUPPLEMENTARY INFORMATION: Specifically, USAFRICOM seeks to include a limited number of local, national, and international public and private organizations, associations, and entities as observers into the USAFRICOM Express Series Exercises in order to familiarize U.S. forces and Host Nation Maritime forces with public and private entities which are often the first affected by maritime domain awareness and/or maritime security issues. USAFRICOM and African Host Nation Maritime forces seek to understand the objectives, capabilities, operating procedures, coordination processes, and information sharing tools of these organizations, associations, and entities. USAFRICOM and African Host Nation Maritime forces desire to eventually build collaborative relationships with non-federal entities and promote a sustainable unity of effort among these stakeholder public and private organizations, associations, and entities. Finally, USAFRICOM and African Host Nation Maritime forces desire to eliminate gaps in response, set standard operating processes and procedures for interaction, and promote understanding within the multi-faceted community of key maritime stakeholders.

Types of Public and Private Organizations Sought: Local, regional, and international public and private sector organizations, associations, and entities operating within USAFRICOM's area of responsibility (AOR) who are interested in working with African Host Nation Maritime forces, USAFRICOM, and African Regional Economic Communities on a non-reimbursable basis. Information and expressions of interest provided to USAFRICOM are not for the purposes of obtaining a contract nor would the information provided and expression of interest provided be a guarantee of exercise participation. Finally, exercise participation will not constitute endorsement by DoD or USAFRICOM.

There are no fees involved and no funding will be provided. Vetted and selected observers will be expected to provide their own travel to the organizing conference and exercise locations with a possibility of limited exceptions for African organizations. USAFRICOM may only provide publicly releasable information about USAFRICOM's mission and goals. If potential observers currently represent an entity that is under contract with the U.S. Government, the following information must be provided: (1) Confirmation that participation is not part of a contract and will not be billed to the U.S. government; (2) a written description of any current contracts with USAFRICOM, its components, subordinate commands, or Joint Task Forces; and (3) whether awaiting the result of any U.S. government acquisition process or contract award. The information sought and expressions of interest will be used to more effectively identify potential exercise observers for the USAFRICOM Express Series Exercises taking place in the U.S. Government's Fiscal Year 2013–2014.

Dated: June 10, 2013.

Aaron Siegel,

Alternate OSD Federal Register Liaison Officer, Department of Defense.

[FR Doc. 2013–14142 Filed 6–13–13; 8:45 am]

BILLING CODE 5001–06–P

DEPARTMENT OF EDUCATION

Applications for New Awards; Native Hawaiian Career and Technical Education Program

AGENCY: Office of Vocational and Adult Education, Department of Education.

ACTION: Notice.

Overview Information: Native Hawaiian Career and Technical Education Program Notice inviting applications for new awards for fiscal year (FY) 2013.

Catalog of Federal Domestic Assistance (CFDA) Number: 84.259A.

DATES: *Applications Available:* June 14, 2013.

Deadline for Transmittal of Applications: July 17, 2013.

Full Text of Announcement

I. Funding Opportunity Description

Purpose of Program: The Native Hawaiian Career and Technical Education Program (NHCTEP) provides grants to eligible community-based organizations to plan, conduct, and administer programs, or portions of programs, that are for the benefit of Native Hawaiians and authorized by and consistent with the purposes of section 116 of the Carl D. Perkins Career and Technical Education Act of 2006 (Act). Section 116(e) of the Act provides that programs, services, and activities funded under NHCTEP must support and improve career and technical education programs. (20 U.S.C. 2326(e))

SUPPLEMENTARY INFORMATION: Under this competition the Department awards grants to carry out projects that provide organized educational activities offering a sequence of courses that—

(a) Provides individuals with coherent and rigorous content aligned with challenging academic standards and relevant technical knowledge and skills needed to prepare for further education and careers in current or emerging professions;

(b) Provides technical skill proficiency, an industry-recognized credential, a certificate, or an associate degree; and

(c) Includes competency-based applied learning that contributes to the academic knowledge, higher-order reasoning and problem-solving skills, work attitudes, general employability skills, technical skills, and occupation-specific skills, and knowledge of all aspects of an industry, including entrepreneurship, of an individual. Projects may include prerequisite courses (other than remedial courses) that meet the definitional requirements of section 3(5)(A) of the Act. (20 U.S.C. 2302(5)(A)) *Priorities:* On December 15, 2010, the Department published in the **Federal Register** a notice of final supplemental priorities and definitions for discretionary grant programs (75 FR 78486), and corrected the notice on May 12, 2011 (76 FR 27637) (supplemental priorities). Under this competition we are using the Secretary's Promoting Science, Technology, Engineering, and Mathematics (STEM) Education (paragraphs (a) through (c)) and Technology priorities from the supplemental priorities, since both of these are key Administration priorities in education. The use of technology within career and technical education (CTE) programs funded under the Act,

including NHCTEP, can help improve the quality of instruction and the connections that students have to universities, colleges, employers, and industries that are far from campus. CTE in the STEM fields is important in providing students with education that can lead to employment in high growth, in-demand industry sectors. If we are to prepare Native Hawaiian students for the jobs of the future, we believe it is important for STEM to be a focus of the CTE programs available to them.

Therefore, in this competition we are particularly interested in applications that address the STEM and Technology priorities.

Invitational Priorities: For this FY 2013 NHCTEP competition, these priorities are invitational priorities. Under 34 CFR 75.105(c)(1) we do not give an application that meets one or both of these invitational priorities a competitive or absolute preference over other applications. An application that meets either or both of the invitational priorities will not receive any additional points for doing so.

These priorities are:

Priority 1—Technology.

Under this priority, we invite applications that propose projects that are designed to improve student achievement (as defined elsewhere in this notice under the heading *Definitions*) or teacher effectiveness through the use of high-quality digital tools or materials, which may include preparing teachers to use the technology to improve instruction, as well as developing, implementing, or evaluating digital tools or materials.

Priority 2—Promoting Science, Technology, Engineering, and Mathematics (STEM) Education.

Under this priority, we invite applications that propose projects that are designed to address one or more of the following priority areas:

(a) Providing students with increased access to rigorous and engaging coursework in STEM.

(b) Increasing the number and proportion of students prepared for postsecondary or graduate study and careers in STEM.

(c) Increasing the opportunities for high-quality preparation of, or professional development for, teachers or other educators of STEM subjects.

Requirements: The Assistant Secretary for Vocational and Adult Education has established the following requirements for this program. These requirements, which include Authorized Programs, Services, and Activities, Evaluation Requirements, and Performance Measures, are from the notice of final requirements, definitions, and selection criteria published in the **Federal Register** on March 24, 2009 (74 FR 12341).

Authorized Programs, Services, and Activities:

(a) *Authorized Programs.* In accordance with section 116(e) of the Act, under this program, NHCTEP projects must—

(1) Develop new programs, services, or activities or improve or expand existing programs, services, or activities that are consistent with the purposes of the Act. In other words, the Department will support ''expansions'' or ''improvements'' that include, but are not necessarily limited to, the expansion of effective programs or practices; upgrading of activities, equipment, or materials; increasing staff capacity; adoption of new technology; modification of curriculum; or implementation of new policies to improve program effectiveness and outcomes; and

(2) Fund a career and technical education program, service, or activity that—

(i) Is a new program, service, or activity that was not provided by the applicant during the instructional term (a defined period, such as a semester, trimester, or quarter, within the academic year) that preceded the request for funding under NHCTEP;

(ii) Will improve or expand an existing career and technical education program; or

(iii) Inherently improves career and technical education. A program, service, or activity ''inherently improves career and technical education'' if it—

(A) Develops new career and technical education programs of study for approval by the appropriate accreditation agency;

(B) Strengthens the rigor of the academic and career and technical components of funded programs;

(C) Uses curriculum that is aligned with industry-recognized standards and will result in students attaining industry-recognized credentials, certificates, or degrees;

(D) Integrates academics (other than remedial courses) with career and technical education programs through a coherent sequence of courses to help ensure learning in the core academic and career and technical subjects;

(E) Links career and technical education at the secondary level with career and technical education at the postsecondary level, and facilitates students' pursuit of a baccalaureate degree;

(F) Expands the scope, depth, and relevance of curriculum, especially content that provides students with a comprehensive understanding of all aspects of an industry and a variety of hands-on, job-specific experiences; or

(G) Offers—

(1) Work-related experience, internships, cooperative education, school-based enterprises, studies in entrepreneurship, community service learning, and job shadowing that are related to career and technical education programs;

(2) Coaching/mentoring, support services, and extra help for students after school, on the weekends, or during the summer so they can meet higher standards;

(3) Career guidance and academic counseling for students participating in career and technical education programs under NHCTEP;

(4) Placement services for students who have successfully completed career and technical education programs and attained a technical skill proficiency that is aligned with industry-recognized standards;

(5) Professional development programs for teachers, counselors, and administrators;

(6) Strong partnerships among grantees and local educational agencies, postsecondary institutions, community leaders, adult education providers, and, as appropriate, other entities, such as employers, labor organizations, parents, and local partnerships, to enable students to achieve State academic standards and attain career and technical skills;

(7) The use of student assessment and evaluation data to improve continually instruction and staff development; or

(8) Research, development, demonstration, dissemination, evaluation and assessment, capacity-building, and technical assistance related to career and technical education programs.

(b) *Student stipends.* (1) A portion of an award under this program may be used to provide stipends (as defined elsewhere in this notice under the heading *Definitions*) to help students meet the costs of participation in a NHCTEP project.

(2) To be eligible for a stipend a student must—

(i) Be enrolled in a career and technical education project funded under this program;

(ii) Be in regular attendance in a NHCTEP project and meet the training institution's attendance requirement;

(iii) Maintain satisfactory progress in his or her program of study according to the training institution's published standards for satisfactory progress; and

(iv) Have an acute economic need that—

(A) Prevents participation in a project funded under this program without a stipend; and

(B) Cannot be met through a work-study program.

(3) The amount of a stipend is the greater of either the minimum hourly wage prescribed by State or local law, or the minimum hourly wage established under the Fair Labor Standards Act.

(4) A grantee may award a stipend only if the stipend combined with other resources the student receives does not exceed the student's financial need. A student's financial need is the difference between the student's cost of attendance and the financial aid or other resources available to defray the student's cost of attending a NHCTEP project.

(5) To calculate the amount of a student's stipend, a grantee must multiply the number of hours a student actually attends career and technical education instruction by the amount of the minimum hourly wage that is prescribed by State or local law or by the minimum hourly wage that is established under the Fair Labor Standards Act. The grantee must reduce the amount of a stipend if necessary to ensure that it does not exceed the student's financial need.

Example: If a grantee uses the Fair Labor Standards Act minimum hourly wage of $7.25 and a student attends classes for 20 hours a week, the student's stipend would be $145 for the week during which the student attends classes ($7.25 × 20 = $145). If the program lasts 16 weeks and the student's total financial need is $2,000, the grantee must reduce the weekly stipend to $125, because the total stipend for the course would otherwise exceed the student's financial need by $320 (or $20 a week).

Note: In accordance with applicable Department statutory requirements and administrative regulations, grantees must maintain records that fully support their decisions to award stipends to students, as well as the amounts that are paid, such as proof of a student's enrollment in the NHCTEP project, stipend applications, timesheets showing the number of hours of student attendance that are confirmed in writing by an instructor, student financial status information, and evidence that a student could not participate in the NHCTEP project without a stipend. (*See generally* 20 U.S.C. 1232f; 34 CFR 75.700–75.702; 75.730; and 75.731.)

(6) An eligible student may earn a stipend when taking a course for the first time, although a stipend may not be provided to a student for a particular course if the student has already taken, completed, and had the opportunity to benefit from the course and is merely repeating the course.

(7) An applicant must include, in its application, the procedure it intends to use in determining student eligibility for stipends and stipend amounts, and its oversight procedures for the awarding and payment of stipends.

(c) *Direct Assistance to Students.* A grantee may provide direct assistance (as defined elsewhere in this notice under the heading *Definitions*) to a student only if the following conditions are met:

(1) The recipient of the direct assistance is an individual who is a member of a special population (as defined elsewhere in this notice under the heading *Definitions*) and who is participating in a NHCTEP project.

(2) The direct assistance is needed to address barriers to the individual's successful participation in a NHCTEP project.

(3) The direct assistance is part of a broader, more generally focused program or activity for addressing the needs of an individual who is a member of a special population.

Note: Direct assistance to individuals who are members of special populations is not, by itself, a ''program or activity for special populations.''

(4) The grant funds used for direct assistance must be expended to supplement, and not supplant, assistance that is otherwise available from non-Federal sources. For example, generally, a community-based organization could not use NHCTEP funds to provide child care for single parents if non-Federal funds previously were made available for this purpose, or if non-Federal funds are used to provide child care services for single parents participating in non-career and technical education programs and these services otherwise (in the absence of NHCTEP funds) would have been available to career and technical education students.

(5) In determining how much of the NHCTEP grant funds it will use for direct assistance to an eligible student, a grantee—

(i) May only provide assistance to the extent that it is needed to address barriers to the individual's successful participation in career and technical education; and

(ii) Considers whether the specific services to be provided are a reasonable and necessary cost of providing career and technical education programs for special populations. However, the Secretary does not envision a circumstance in which it would be a reasonable and necessary expenditure of NHCTEP project funds for a grantee to utilize a majority of a project's budget to pay direct assistance to students, in lieu of providing the students served by the project with career and technical education.

(d) *Career and Technical Education Agreement.* Any applicant that is not proposing to provide career and technical education directly to Native Hawaiian students and proposes instead to pay one or more qualified educational entities to provide such career and technical education to Native Hawaiian students must include with its application a written career and technical education agreement between the applicant and the educational entity. The written agreement must describe the commitment between the applicant and the educational entity and must include, at a minimum, a statement of the responsibilities of the applicant and the entity. The agreement must be signed by the appropriate individuals on behalf of each party, such as the authorizing official or administrative head of the applicant Native Hawaiian community-based organization.

(e) *Supplement-Not-Supplant.* Grantees may not use funds under NHCTEP to replace otherwise available non-Federal funding for ''direct assistance to students'' (as defined elsewhere in this notice under the heading *Definitions*) and family assistance programs. For example, NHCTEP funds must not be used to supplant non-Federal funds to pay the costs of students' tuition, dependent care, transportation, books, supplies, and other costs associated with participation in a career and technical education program.

Further, funds under NHCTEP may not be used to replace Federal student financial aid. The Act does not authorize the Secretary to fund projects that serve primarily as entities through which students may apply for and receive tuition and other financial assistance.

Additional Statutory Requirement Limiting Services:

Section 315 of the Act prohibits the use of funds received under the Act to provide vocational and technical education programs to students prior to the seventh grade, except that equipment and facilities purchased with funds under the Act may be used by such students. (20 U.S.C. 2395)

Evaluation Requirements:

To help ensure the high quality of NHCTEP projects and the achievement of the goals and purposes of section 116(h) of the Act, each grantee must budget for and conduct an ongoing evaluation of the effectiveness of its project. An independent evaluator must conduct the evaluation. The evaluation must—

(a) Be appropriate for the project and be both formative and summative in nature; and

(b) Include—

(1) Collection and reporting of the performance measures for NHCTEP that are identified in the *Performance Measures* section of this notice; and

(2) Qualitative and quantitative data with respect to—

(i) Academic and career and technical competencies demonstrated by the participants and the number and kinds of academic and work credentials acquired by individuals, including their participation in programs providing skill proficiency assessments, industry certifications, or training at the associate degree level that is articulated with an advanced degree option;

(ii) Enrollment, completion, and placement of participants by gender, for each occupation for which training was provided;

(iii) Job or work skill attainment or enhancement, including participation in apprenticeship and work-based learning programs, and student progress in achieving technical skill proficiencies necessary to obtain employment in the field for which the student has been prepared, including attainment or enhancement of technical skills in the industry the student is preparing to enter;

(iv) Activities, during the formative stages of the project, to help guide and improve the project, as well as a summative evaluation that includes recommendations for disseminating information on project activities and results;

(v) The number and percentage of students who obtained industry-recognized credentials, certificates, or degrees;

(vi) The outcomes of students' technical assessments, by type and scores, if available;

(vii) The rates of attainment of a proficiency credential or certificate, in conjunction with a secondary school diploma;

(viii) The effectiveness of the project, including a comparison between the intended and observed results and a demonstration of a clear link between the observed results and the specific treatment given to project participants;

(ix) The extent to which information about or resulting from the project was disseminated at other sites, such as through the grantee's development and use of guides or manuals that provide step-by-step directions for practitioners to follow when initiating similar efforts; and

(x) The impact of the project, e.g., follow-up data on students' employment, sustained employment, promotions, further and continuing education or training, or the impact the project had on Native Hawaiian economic development or career and technical education activities.

Definitions:

The following definitions govern this program. The definitions of ''acute economic need,'' ''coherent sequence of courses,'' ''direct assistance to students,'' and ''stipend'' are from the notice of final requirements, definitions, and selection criteria published in the **Federal Register** on March 24, 2009 (74 FR 12341). The definition of ''individual with a disability'' is from section 3 of the Americans with Disabilities Act of 1990 (42 U.S.C. 12102). The definition of ''Native Hawaiian'' is from section 116 of the Act (20 U.S.C. 2326(a)(4)). The definition of ''student achievement'' is from the notice of final supplemental priorities and definitions for discretionary grant programs published in the **Federal Register** on December 15, 2010 (75 FR 78486), and the notice corrected on May 12, 2011 (76 FR 27637). The definitions of the remaining terms are from section 3 of the Act (20 U.S.C. 2303).

Acute economic need means an income that is at or below the national poverty level according to the latest available data from the U.S. Department of Commerce or the U.S. Department of Health and Human Services Poverty Guidelines.

Career and technical education means organized educational activities that—

(a) Offer a sequence of courses that—

(1) Provides individuals with coherent and rigorous content aligned with challenging academic standards and relevant technical knowledge and skills needed to prepare for further education and careers in current or emerging professions;

(2) Provides technical skills proficiency, an industry-recognized credential, a certificate, or an associate degree; and

(3) May include prerequisite courses (other than a remedial course) that meet the requirements of this definition; and

(b) Include competency-based applied learning that contributes to the academic knowledge, higher-order reasoning and problem-solving skills, work attitudes, general employability skills, technical skills, and occupation-specific skills, and knowledge of all aspects of an industry, including entrepreneurship, of an individual.

Coherent sequence of courses means a series of courses in which career and academic education is integrated, and that directly relates to, and leads to, both academic and occupational competencies. The term includes competency-based education and academic education, and adult training or retraining, including sequential units encompassed within a single adult retraining course that otherwise meets the requirements of this definition.

Direct assistance to students means tuition, dependent care, transportation, books, and supplies that are necessary for a student to participate in a project funded under this program.

Individual with a disability means an individual with any disability (as defined in section 3 of the Americans with Disabilities Act of 1990 (42 U.S.C. 12102)).

Individual with limited English proficiency means a secondary school student, an adult, or an out-of-school youth, who has limited ability in speaking, reading, writing, or understanding the English language, and—

(a) Whose native language is a language other than English; or

(b) Who lives in a family or community environment in which a language other than English is the dominant language.

Native Hawaiian means any individual any of whose ancestors were natives, prior to 1778, of the area which now comprises the State of Hawaii.

Non-traditional fields means occupations or fields of work, including careers in computer science, technology, and other current and emerging high-skill occupations, for which individuals from one gender comprise less than 25 percent of the individuals employed in each such occupation or field of work.

Special populations means—

(a) Individuals with disabilities;

(b) Individuals from economically disadvantaged families, including foster children;

(c) Individuals preparing for non-traditional fields;

(d) Single parents, including single pregnant women;

(e) Displaced homemakers; and

(f) Individuals with limited English proficiency.

Stipend means a subsistence allowance—

(a) For a student who is enrolled in a career and technical education program funded under the NHCTEP;

(b) For a student who has an acute economic need that cannot be met through work-study programs; and

(c) That is necessary for the student to participate in a project funded under this program.

Student achievement means—

(a) For tested grades and subjects:

(1) A student's score on the State's assessments under the ESEA; and, as appropriate,

(2) Other measures of student learning, such as those described in paragraph (b) of this definition, provided they are rigorous and comparable across schools.

(b) For non-tested grades and subjects: alternative measures of student learning and performance, such as student scores on pre-tests and end-of-course tests; student performance on English language proficiency assessments; and other measures of student achievement that are rigorous and comparable across schools.

Support services means services related to curriculum modification, equipment modification, classroom modification, supportive personnel, and instructional aids and devices.

Program Authority: 20 U.S.C. 2326(a)–(h).

Applicable Regulations: (a) The Education Department General Administrative Regulations (EDGAR) in 34 CFR parts 74, 75, 77, 81, 82, 84, 86, 97, 98, and 99. (b) The Education Department suspension and debarment regulations in 2 CFR part 3485. (c) The notice of final requirements, definitions, and selection criteria published in the **Federal Register** on March 24, 2009 (74 FR 12341). (d) The notice of final supplemental priorities and definitions for discretionary grant programs published in the **Federal Register** on December 15, 2010 (75 FR 78486), and the notice corrected on May 12, 2011 (76 FR 27637).

II. Award Information

Type of Award: Discretionary grants.

Estimated Available Funds: $2,779,500 is available for the NHCTEP from the FY 2012 appropriation. Funding for the second year is contingent upon the availability of funds and to a grantee meeting the requirements of 34 CFR 75.253.

Contingent upon the availability of funds and the quality of applications, we may make additional awards in FY 2014 from the list of unfunded applicants from this competition.

Estimated Range of Awards: $250,000–$500,000.

Estimated Average Size of Awards: $277,950.

Estimated Number of Awards: 10.

Note: The Department is not bound by any estimates in this notice.

Project Period: Up to 24 months.

III. Eligibility Information

1. *Eligible Applicants:*

(a) Community-based organizations primarily serving and representing Native Hawaiians. For purposes of the NHCTEP, a community-based organization means a public or private organization that provides career and technical education, or related services, to individuals in the Native Hawaiian community.

(b) Any community-based organization may apply individually or as part of a consortium with one or more eligible community-based organizations. (34 CFR 75.127)

2.a. *Cost Sharing or Matching:* This program does not require cost sharing or matching.

b. *Supplement-Not-Supplant:* This program includes a supplement-not-supplant requirement. In accordance with section 311(a) of the Act, funds under this program may not be used to supplant non-Federal funds used to carry out career and technical education activities and tech prep program activities. Furthermore, the prohibition against supplanting also means that grantees are required to use their negotiated restricted indirect cost rates under this program. (34 CFR 75.563)

The Secretary cautions applicants not to plan to use funds under NHCTEP to replace otherwise available non-Federal funding for ''direct assistance to students'' (as defined elsewhere in this notice under the heading *Definitions*) and family assistance programs. For example, NHCTEP funds must not be used to supplant non-Federal funds to pay the costs of students' tuition, dependent care, transportation, books, supplies, and other costs associated with participation in a career and technical education program.

Further, funds under NHCTEP may not be used to replace Federal student financial aid. The Secretary wishes to highlight that the Act does not authorize the Secretary to fund projects that serve primarily as entities through which students may apply for and receive tuition and other financial assistance.

IV. Application and Submission Information

1. *Address to Request Application Package:* Linda Mayo, U.S. Department of Education, 400 Maryland Avenue SW., Room 11075, Potomac Center Plaza (PCP), Washington, DC 20202–7241. Telephone: (202) 245–7792. Fax: (202) 245–7170 or by email: *linda.mayo@ed.gov.*

If you use a telecommunications device for the deaf (TDD) or a text telephone (TTY), call the Federal Relay Service (FRS), toll free, at 1–800–877–8339.

You can also obtain an application package via the Internet from the following address: *www.grants.gov/.*

Individuals with disabilities can obtain a copy of the application package in an accessible format (e.g., braille, large print, audiotape, or compact disc) by contacting the program contact person listed in this section.

2. *Content and Form of Application Submission:* Requirements concerning the content of an application, together with the forms you must submit, are in the application package for this competition.

Page Limit: The application narrative (Part III of the application) is where you, the applicant, address the selection criteria that reviewers use to evaluate your application. You must limit the application narrative to no more than 50 pages, using the following standards:

- A ''page'' is 8.5″ x 11″, on one side only, with 1″ margins at the top, bottom, and both sides.
- Double space (no more than three lines per vertical inch) all text in the application narrative, including titles, headings, footnotes, quotations, references, and captions, as well as all text in charts, tables, figures, and graphs.
- Use a font that is either 12 point or larger or no smaller than 10 pitch (characters per inch).
- Use one of the following fonts: Times New Roman, Courier, Courier New, or Arial. An application submitted in any other font (including Times Roman or Arial Narrow) will not be accepted.

The page limit does not apply to Part I, the cover sheet; Part II, the budget section, including the narrative budget justification; Part IV, the assurances and certifications; or the one-page abstract, the resumes, the bibliography, or the letters of support. However, the page limit does apply to all of the application narrative section.

Our reviewers will not read any pages of your application that exceed the page limit.

3. *Submission Dates and Times:*

Applications Available: July 17, 2013.

Deadline for Transmittal of Applications: July 15, 2013.

Applications for grants under this program must be submitted electronically using the Grants.gov Apply site (Grants.gov). For information (including dates and times) about how to submit your application electronically, or in paper format by mail or hand delivery if you qualify for an exception to the electronic submission requirement, please refer to section IV. 7. Other Submission Requirements of this notice.

We do not consider an application that does not comply with the deadline requirements.

Individuals with disabilities who need an accommodation or auxiliary aid

in connection with the application process should contact the person listed under **FOR FURTHER INFORMATION CONTACT** in section VII of this notice. If the Department provides an accommodation or auxiliary aid to an individual with a disability in connection with the application process, the individual's application remains subject to all other requirements and limitations in this notice.

4. *Intergovernmental Review:* This program is not subject to Executive Order 12372 and the regulations in 34 CFR part 79.

5. *Funding Restrictions:* We reference regulations outlining funding restrictions in the *Applicable Regulations* section of this notice.

6. *Data Universal Numbering System Number, Taxpayer Identification Number, Central Contractor Registry, and System for Award Management:* To do business with the Department of Education, you must—

a. Have a Data Universal Numbering System (DUNS) number and a Taxpayer Identification Number (TIN);

b. Register both your DUNS number and TIN with the Central Contractor Registry (CCR)—and, after July 24, 2012, with the System for Award Management (SAM), the Government's primary registrant database;

c. Provide your DUNS number and TIN on your application; and

d. Maintain an active CCR or SAM registration with current information while your application is under review by the Department and, if you are awarded a grant, during the project period.

You can obtain a DUNS number from Dun and Bradstreet. A DUNS number can be created within one business day.

If you are a corporate entity, agency, institution, or organization, you can obtain a TIN from the Internal Revenue Service. If you are an individual, you can obtain a TIN from the Internal Revenue Service or the Social Security Administration. If you need a new TIN, please allow 2–5 weeks for your TIN to become active.

The CCR or SAM registration process may take five or more business days to complete. If you are currently registered with the CCR, you may not need to make any changes. However, please make certain that the TIN associated with your DUNS number is correct. Also note that you will need to update your registration annually. This may take three or more business days to complete. Information about SAM is available at SAM.gov.

In addition, if you are submitting your application via Grants.gov, you must (1) be designated by your organization as an Authorized Organization Representative (AOR); and (2) register yourself with Grants.gov as an AOR. Details on these steps are outlined at the following Grants.gov Web page: *www.grants.gov/applicants/get_registered.jsp.*

7. *Other Submission Requirements:*

Applications for grants under this program must be submitted electronically unless you qualify for an exception to this requirement in accordance with the instructions in this section.

a. *Electronic Submission of Applications.*

Applications for grants under the NHCTEP, CFDA number 84.259A, must be submitted electronically using the Governmentwide Grants.gov Apply site at www.Grants.gov. Through this site, you will be able to download a copy of the application package, complete it offline, and then upload and submit your application. You may not email an electronic copy of a grant application to us.

We will reject your application if you submit it in paper format unless, as described elsewhere in this section, you qualify for one of the exceptions to the electronic submission requirement *and* submit, no later than two weeks before the application deadline date, a written statement to the Department that you qualify for one of these exceptions. Further information regarding calculation of the date that is two weeks before the application deadline date is provided later in this section under *Exception to Electronic Submission Requirement.*

You may access the electronic grant application for the NHCTEP at *www.Grants.gov.* You must search for the downloadable application package for this program by the CFDA number. Do not include the CFDA number's alpha suffix in your search (e.g., search for 84.259, not 84.259A).

Please note the following:

- When you enter the Grants.gov site, you will find information about submitting an application electronically through the site, as well as the hours of operation.
- Applications received by Grants.gov are date and time stamped. Your application must be fully uploaded and submitted and must be date and time stamped by the Grants.gov system no later than 4:30:00 p.m., Washington, DC time, on the application deadline date. Except as otherwise noted in this section, we will not accept your application if it is received—that is, date and time stamped by the Grants.gov system—after 4:30:00 p.m., Washington, DC time, on the application deadline date. We do not consider an application that does not comply with the deadline requirements. When we retrieve your application from Grants.gov, we will notify you if we are rejecting your application because it was date and time stamped by the Grants.gov system after 4:30:00 p.m., Washington, DC time, on the application deadline date.
- The amount of time it can take to upload an application will vary depending on a variety of factors, including the size of the application and the speed of your Internet connection. Therefore, we strongly recommend that you do not wait until the application deadline date to begin the submission process through Grants.gov.
- You should review and follow the Education Submission Procedures for submitting an application through Grants.gov that are included in the application package for this program to ensure that you submit your application in a timely manner to the Grants.gov system. You can also find the Education Submission Procedures pertaining to Grants.gov under News and Events on the Department's G5 system home page at *www.G5.gov.*
- You will not receive additional point value because you submit your application in electronic format, nor will we penalize you if you qualify for an exception to the electronic submission requirement, as described elsewhere in this section, and submit your application in paper format.
- You must submit all documents electronically, including all information you typically provide on the following forms: the Application for Federal Assistance (SF 424), the Department of Education Supplemental Information for SF 424, Budget Information—Non-Construction Programs (ED 524), and all necessary assurances and certifications.
- You must upload any narrative sections and all other attachments to your application as files in a PDF (Portable Document) read-only, non-modifiable format. Do not upload an interactive or fillable PDF file. If you upload a file type other than a read-only, non-modifiable PDF or submit a password-protected file, we will not review that material.
- Your electronic application must comply with any page-limit requirements described in this notice.
- After you electronically submit your application, you will receive from Grants.gov an automatic notification of receipt that contains a Grants.gov tracking number. (This notification indicates receipt by Grants.gov only, not receipt by the Department.) The Department then will retrieve your application from Grants.gov and send a

second notification to you by email. This second notification indicates that the Department has received your application and has assigned your application a PR/Award number (an ED-specified identifying number unique to your application).

• We may request that you provide us original signatures on forms at a later date.

Application Deadline Date Extension in Case of Technical Issues with the Grants.gov System: If you are experiencing problems submitting your application through Grants.gov, please contact the Grants.gov Support Desk, toll free, at 1–800–518–4726. You must obtain a Grants.gov Support Desk Case Number and must keep a record of it.

If you are prevented from electronically submitting your application on the application deadline date because of technical problems with the Grants.gov system, we will grant you an extension until 4:30:00 p.m., Washington, DC time, the following business day to enable you to transmit your application electronically or by hand delivery. You also may mail your application by following the mailing instructions described elsewhere in this notice.

If you submit an application after 4:30:00 p.m., Washington, DC time, on the application deadline date, please contact the person listed under **FOR FURTHER INFORMATION CONTACT** in section VII of this notice and provide an explanation of the technical problem you experienced with Grants.gov, along with the Grants.gov Support Desk Case Number. We will accept your application if we can confirm that a technical problem occurred with the Grants.gov system and that that problem affected your ability to submit your application by 4:30:00 p.m., Washington, DC time, on the application deadline date. The Department will contact you after a determination is made on whether your application will be accepted.

Note: The extensions to which we refer in this section apply only to the unavailability of, or technical problems with, the Grants.gov system. We will not grant you an extension if you failed to fully register to submit your application to Grants.gov before the application deadline date and time or if the technical problem you experienced is unrelated to the Grants.gov system.

Exception to Electronic Submission Requirement: You qualify for an exception to the electronic submission requirement, and may submit your application in paper format, if you are unable to submit an application through the Grants.gov system because—

• You do not have access to the Internet; or

• You do not have the capacity to upload large documents to the Grants.gov system; *and*

• No later than two weeks before the application deadline date (14 calendar days or, if the fourteenth calendar day before the application deadline date falls on a Federal holiday, the next business day following the Federal holiday), you mail or fax a written statement to the Department, explaining which of the two grounds for an exception prevents you from using the Internet to submit your application.

If you mail your written statement to the Department, it must be postmarked no later than two weeks before the application deadline date. If you fax your written statement to the Department, we must receive the faxed statement no later than two weeks before the application deadline date.

Address and mail or fax your statement to: Linda Mayo, U.S. Department of Education, 400 Maryland Avenue SW., Room 11075, PCP, Washington, 20202–7241. Fax: (202) 245–7792.

Your paper application must be submitted in accordance with the mail or hand delivery instructions described in this notice.

b. *Submission of Paper Applications by Mail.*

If you qualify for an exception to the electronic submission requirement, you may mail (through the U.S. Postal Service or a commercial carrier) your application to the Department. You must mail the original and two copies of your application, on or before the application deadline date, to the Department at the following address: U.S. Department of Education, Application Control Center, Attention: (CFDA Number 84.259A), LBJ Basement Level 1, 400 Maryland Avenue SW., Washington, DC 20202–4260.

You must show proof of mailing consisting of one of the following:

(1) A legibly dated U.S. Postal Service postmark.

(2) A legible mail receipt with the date of mailing stamped by the U.S. Postal Service.

(3) A dated shipping label, invoice, or receipt from a commercial carrier.

(4) Any other proof of mailing acceptable to the Secretary of the U.S. Department of Education.

If you mail your application through the U.S. Postal Service, we do not accept either of the following as proof of mailing:

(1) A private metered postmark.

(2) A mail receipt that is not dated by the U.S. Postal Service.

If your application is postmarked after the application deadline date, we will not consider your application.

Note: The U.S. Postal Service does not uniformly provide a dated postmark. Before relying on this method, you should check with your local post office.

c. *Submission of Paper Applications by Hand Delivery.*

If you qualify for an exception to the electronic submission requirement, you (or a courier service) may deliver your paper application to the Department by hand. You must deliver the original and two copies of your application by hand, on or before the application deadline date, to the Department at the following address: U.S. Department of Education, Application Control Center, Attention: (CFDA Number 84.259A), 550 12th Street SW., Room 7041, Potomac Center Plaza, Washington, DC 20202–4260.

The Application Control Center accepts hand deliveries daily between 8:00 a.m. and 4:30:00 p.m., Washington, DC time, except Saturdays, Sundays, and Federal holidays.

Note for Mail or Hand Delivery of Paper Applications: If you mail or hand deliver your application to the Department—

(1) You must indicate on the envelope and—if not provided by the Department—in Item 11 of the SF 424 the CFDA number, including suffix letter, if any, of the competition under which you are submitting your application; and

(2) The Application Control Center will mail to you a notification of receipt of your grant application. If you do not receive this notification within 15 business days from the application deadline date, you should call the U.S. Department of Education Application Control Center at (202) 245–6288.

V. Application Review Information

1. *Selection Criteria:* The selection criteria for this program are from the notice of final requirements, definitions, and selection criteria published in the **Federal Register** on March 24, 2009 (74 FR 12341). The total maximum score for all of the selection criteria is 120 points. The maximum score for each criterion is indicated in parenthesis. The program criteria are as follows:

(a) *Quality of the Project Design (35 points).* In determining the quality of the design of the proposed project, we consider the following factors:

(1) The extent to which the design of the proposed project is appropriate to and will successfully address the needs of the target population or other identified needs (as evidenced by such data as local labor market demand, occupational trends, and surveys). (5 points)

(2) The extent to which goals, objectives, and outcomes are clearly

specified and measurable. (For example, we look for clear descriptions of proposed student career and technical education activities; recruitment and retention strategies; expected student enrollments, completions, and placements in jobs, military specialties, and continuing education/training opportunities; the number of teachers, counselors, and administrators to be trained; and identification of requirements for each program of study to be provided under the project, including related training areas and a description of performance outcomes.) (10 points)

(3) The extent to which the proposed project will establish linkages with other appropriate agencies (e.g., community, State, and other Federal resources) and organizations providing services to the target population in order to improve services to students and strengthen outcomes for the proposed project. (5 points)

(4) The extent to which the services to be provided by the proposed project will create and offer activities that focus on enabling participants to obtain the skills necessary to gain employment in high-skill, high-wage, and high-demand occupations in emerging fields or in a specific career field. (5 points)

(5) The extent to which the services to be provided by the proposed project will create opportunities for students to acquire skills identified by the State at the secondary level or by industry-recognized career and technical education programs for licensure, degree, certification, or as required by a career or profession. (5 points)

(6) The extent to which the proposed project will provide opportunities for high-quality training or professional development services that—

(i) Are of sufficient quality, intensity, and duration to lead to improvements in practice among instructional personnel;

(ii) Will improve and increase instructional personnel's knowledge and skills to help students meet challenging and rigorous academic and career and technical skill proficiencies;

(iii) Will advance instructional personnel's understanding of effective instructional strategies that are supported by scientifically based research; and

(iv) Include professional development plans that clearly address ways in which learning gaps will be addressed and how continuous review of performance will be conducted to identify training needs. (5 points)

(b) *Quality of the Management Plan (15 points).* In determining the quality of the management plan for the proposed project, we consider the following factors:

(1) The adequacy of the management plan to achieve the objectives of the proposed project on time and within budget, including clearly defined responsibilities, timelines, and the milestones and performance standards for accomplishing project tasks. (5 points)

(2) The extent to which the time commitments of the project director and other key project personnel, including instructors, are appropriate and adequate to meet the objectives of the proposed project. (5 points)

(3) The adequacy of procedures for ensuring feedback and continuous improvement in the operation of the proposed project. (5 points)

(c) *Quality of Data Collection Plan (10 points).* In determining the quality of the data collection plan, we consider the following factors:

(1) The adequacy of procedures and methods for collecting data. (5 points)

(2) The adequacy of the data collection plan in allowing comparison with other similar secondary, postsecondary, and adult career and technical education programs. (5 points)

(d) *Quality of Project Personnel (25 points).* In determining the quality of project personnel, we consider the following factors:

(1) The extent to which the applicant encourages applications for employment from persons who are members of groups that have traditionally been underrepresented based on race, color, national origin, gender, age, or disability. (5 points)

(2) The qualifications, including relevant training, expertise, and experience, of the project director. (5 points)

(3) The qualifications, including relevant training, expertise, and experience, of key project personnel, especially the extent to which the project will use instructors who are certified to teach in the field in which they will provide instruction. (10 points)

(4) The qualifications, including training, expertise, and experience, of project consultants. (5 points)

(e) *Adequacy of Resources (15 points).* In determining the adequacy of resources for the proposed project, we consider the following factors:

(1) The adequacy of support, including facilities, equipment, supplies, and other resources, from the applicant organization(s) and the entities to be served, including the evidence and relevance of commitments (e.g., articulation agreements, memoranda of understanding, letters of support, or commitments to employ project participants) of the applicant, local employers, or entities to be served by the project. (5 points)

(2) The extent to which the budget is adequate and costs are reasonable in relation to the objectives and design of the proposed project. (5 points)

(3) The potential for continued support of the project after Federal funding ends. (5 points)

(f) *Quality of the Project Evaluation (20 points).* In determining the quality of the evaluation, we consider the following factors:

(1) The extent to which the methods of evaluation proposed by the grantee are thorough, feasible, and appropriate to the goals, objectives, and outcomes of the proposed project. (5 points)

(2) The extent to which the methods of evaluation include the use of objective performance measures that are clearly related to the intended outcomes of the project and the performance measures discussed elsewhere in this notice and will produce quantitative and qualitative data, to the extent possible. (5 points)

(3) The extent to which the methods of evaluation will provide performance feedback and continuous improvement toward achieving intended outcomes. (5 points)

(4) The quality of the proposed evaluation to be conducted by an external evaluator with the necessary background and technical expertise to carry out the evaluation. (5 points)

2. *Review and Selection Process:* We remind potential applicants that in reviewing applications in any discretionary grant competition, the Secretary may consider, under 34 CFR 75.217(d)(3), the past performance of the applicant in carrying out a previous award, such as the applicant's use of funds, achievement of project objectives, and compliance with grant conditions. The Secretary may also consider whether the applicant failed to submit a timely performance report or submitted a report of unacceptable quality.

In addition, in making a competitive grant award, the Secretary also requires various assurances including those applicable to Federal civil rights laws that prohibit discrimination in programs or activities receiving Federal financial assistance from the Department of Education (34 CFR 100.4, 104.5, 106.4, 108.8, and 110.23).

3. *Special Conditions:* Under 34 CFR 74.14 and 80.12, the Secretary may impose special conditions on a grant if the applicant or grantee is not financially stable; has a history of unsatisfactory performance; has a

financial or other management system that does not meet the standards in 34 CFR parts 74 or 80, as applicable; has not fulfilled the conditions of a prior grant; or is otherwise not responsible.

VI. Award Administration Information

1. *Award Notices:* If your application is successful, we notify your U.S. Representative and U.S. Senators and send you a Grant Award Notification (GAN); or we may send you an email containing a link to access an electronic version of your GAN. We may notify you informally, also. If your application is not evaluated or not selected for funding, we notify you.

2. *Administrative and National Policy Requirements:* We identify administrative and national policy requirements in the application package and reference these and other requirements in the *Applicable Regulations* section of this notice.

We reference the regulations outlining the terms and conditions of an award in the *Applicable Regulations* section of this notice and include these and other specific conditions in the GAN. The GAN also incorporates your approved application as part of your binding commitments under the grant.

3. *Reporting:* (a) If you apply for a grant under this competition, you must ensure that you have in place the necessary processes and systems to comply with the reporting requirements in 2 CFR part 170 should you receive funding under the competition. This does not apply if you have an exception under 2 CFR 170.110(b).

(b) At the end of your project period, you must submit a final performance report, including financial information, as directed by the Secretary. If you receive a multi-year award, you must submit an annual performance report that provides the most current performance and financial expenditure information as directed by the Secretary under 34 CFR 75.118. The Secretary may also require more frequent performance reports under 34 CFR 75.720(c). For specific requirements on reporting, please go to *www.ed.gov/fund/grant/apply/appforms/appforms.html.*

4. *Performance Measures:* Under the Government Performance and Results Act of 1993 (GPRA), Federal departments and agencies must clearly describe the goals and objectives of their programs, identify resources and actions needed to accomplish these goals and objectives, develop a means of measuring progress made, and regularly report on their achievement. One important source of program information on successes and lessons learned is the project evaluation conducted under individual grants. The Department has established the following core factors and measures for evaluating the overall effectiveness of the NHCTEP and projects supported under this program. Consequently, we advise an applicant for a grant under this program to give careful consideration to these core factors and measures.

(a) *Number of Secondary, Postsecondary, and Adult Projects.* The number of secondary, postsecondary, and adult projects that—

(1) Apply industry-recognized skill standards so that students can earn skill certificates in those projects; and

(2) Offer skill competencies, related assessments, and industry-recognized skill certificates in an area of study offered by secondary and postsecondary institutions.

(b) *Secondary Projects.* The percentage of participating secondary career and technical education students who—

(1) Meet or exceed State proficiency standards in reading/language arts and mathematics;

(2) Attain a secondary school diploma or its State-recognized equivalent, or a proficiency credential in conjunction with a secondary school diploma;

(3) Attain career and technical education skill proficiencies aligned with industry-recognized standards; and

(4) Are placed in postsecondary education, advanced training, military service, or employment in high-skill, high-wage, and high-demand occupations or in current or emerging occupations.

(c) *Postsecondary Projects.* The percentage of participating postsecondary students in career and technical education programs who—

(1) Receive postsecondary degrees, certificates, or credentials;

(2) Attain career and technical education skill proficiencies aligned with industry-recognized standards;

(3) Receive industry-recognized credentials, certificates, or degrees;

(4) Are retained in postsecondary education or transfer to a baccalaureate degree program; and

(5) Are placed in military service or apprenticeship programs, or are placed in employment, receive an employment promotion, or retain employment.

(d) *Adult Projects.* The percentage of participating adult career and technical education students who—

(1) Enroll in a postsecondary education or training program;

(2) Attain career and technical education skill proficiencies aligned with industry-recognized standards;

(3) Receive industry-recognized credentials, certificates, or degrees; and

(4) Are placed in employment, receive an employment promotion, or retain employment.

Note: All grantees must submit an annual performance report addressing these performance measures, to the extent feasible and to the extent that they apply to each grantee's NHCTEP project.

5. *Continuation Awards:* In making a continuation award, the Secretary may consider, under 34 CFR 75.253, the extent to which a grantee has made ''substantial progress toward meeting the objectives in its approved application.'' This consideration includes the review of a grantee's progress in meeting the targets and projected outcomes in its approved application, and whether the grantee has expended funds in a manner that is consistent with its approved application and budget. In making a continuation grant, the Secretary also considers whether the grantee is operating in compliance with the assurances in its approved application, including those applicable to Federal civil rights laws that prohibit discrimination in programs or activities receiving Federal financial assistance from the Department (34 CFR 100.4, 104.5, 106.4, 108.8, and 110.23).

VII. Agency Contact

FOR FURTHER INFORMATION CONTACT: Linda Mayo, U.S. Department of Education, 400 Maryland Avenue SW., Room 11075, PCP, Washington, DC 20202–7241. Telephone: (202) 245–7792, or by email: *linda.mayo@ed.gov.*

If you use a TDD or a TTY, call the FRS, toll free, at 1–800–877–8339.

VIII. Other Information

Accessible Format: Individuals with disabilities can obtain this notice and a copy of the application package in an accessible format (e.g., braille, large print, audiotape, or compact disc) on request to the program contact person listed under **FOR FURTHER INFORMATION CONTACT** in section VII of this notice.

Electronic Access to This Document: The official version of this document is the document published in the **Federal Register**. Free Internet access to the official edition of the **Federal Register** and the Code of Federal Regulations is available via the Federal Digital System at: *www.gpo.gov/fdsys.* At this site you can view this document, as well as all other documents of this Department published in the **Federal Register**, in text or Adobe Portable Document Format (PDF). To use PDF you must have Adobe Acrobat Reader, which is available free at the site.

You may also access documents of the Department published in the **Federal Register** by using the article search feature at: *www.federalregister.gov.* Specifically, through the advanced search feature at this site, you can limit your search to documents published by the Department.

Dated: June 10, 2013.

Brenda Dann-Messier,

Assistant Secretary for Vocational and Adult Education.

[FR Doc. 2013–14064 Filed 6–13–13; 8:45 am]

BILLING CODE 4000–01–P

DEPARTMENT OF EDUCATION

Applications for New Awards; National Institute on Disability and Rehabilitation Research—Rehabilitation Research and Training Centers

AGENCY: Office of Special Education and Rehabilitative Services, Department of Education.

ACTION: Notice.

Overview Information

National Institute on Disability and Rehabilitation Research (NIDRR)—Disability and Rehabilitation Research Projects and Centers Program—Rehabilitation Research and Training Centers (RRTCs)—Research and Capacity Building for Minority Entities

Notice inviting applications for new awards for fiscal year (FY) 2013.

Catalog of Federal Domestic Assistance (CFDA) Number: 84.133B–1.

DATES:

Applications Available: June 14, 2013.

Date of Pre-Application Meeting: July 5, 2013.

Deadline for Transmittal of Applications: August 13, 2013.

Full Text of Announcement

I. Funding Opportunity Description

Purpose of Program: The purpose of the Disability and Rehabilitation Research Projects and Centers Program is to plan and conduct research, demonstration projects, training, and related activities, including international activities, to develop methods, procedures, and rehabilitation technology that maximize the full inclusion and integration into society, employment, independent living, family support, and economic and social self-sufficiency of individuals with disabilities, especially individuals with the most severe disabilities, and to improve the effectiveness of services authorized under the Rehabilitation Act of 1973, as amended (Rehabilitation Act).

Rehabilitation Research and Training Centers

The purpose of the RRTCs, which are funded through the Disability and Rehabilitation Research Projects and Centers Program, is to improve the effectiveness of services authorized under the Rehabilitation Act through advanced research, training, technical assistance, and dissemination activities in general problem areas, as specified by NIDRR. Such activities are designed to benefit rehabilitation service providers, individuals with disabilities, and the family members or other authorized representatives of individuals with disabilities. Additional information on the RRTC program can be found at: *www.ed.gov/rschstat/research/pubs/res-program.html#RRTC.*

Priority: There are two priorities for this competition. One priority is from the notice of final priority for this program, published elsewhere in this issue of the **Federal Register**. The other priority—the General RRTC Requirements priority—is from the notice of final priorities for the Disability and Rehabilitation Research Projects and Centers Program, published in the **Federal Register** on February 1, 2008 (73 FR 6132), and it applies to all RRTC competitions.

Absolute Priorities: For FY 2013 and any subsequent year in which we make awards from the list of unfunded applicants from this competition, these priorities are absolute priorities. Under 34 CFR 75.105(c)(3) we consider only applications that meet these priorities.

These priorities are:

Priority 1—Research and Capacity Building for Minority Entities

Note: The full text of this priority is included in the notice of final priority published elsewhere in this issue of the **Federal Register** and in the application package for this competition.

Priority 2—General RRTC Requirements

Note: The full text of this priority is included in the notice of final priorities for the Disability and Rehabilitation Research Projects and Centers Program, published in the **Federal Register** on February 1, 2008 (73 FR 6132), and in the application package for this competition.

Program Authority: 29 U.S.C. 762(g) and 764(b)(2).

Applicable Regulations: (a) The Education Department General Administrative Regulations in 34 CFR parts 74, 75, 77, 80, 81, 82, 84, 86, and 97. (b) The Education Department suspension and debarment regulations in 2 CFR part 3485. (c) The regulations for this program in 34 CFR part 350. (d) The notice of final priority for this program, published elsewhere in this issue of the **Federal Register.** (e) The notice of final priorities for the Disability and Rehabilitation Research Projects and Centers Program, published in the **Federal Register** on February 1, 2008 (73 FR 6132).

Note: The regulations in 34 CFR part 86 apply to institutions of higher education (IHEs) only.

II. Award Information

Type of Award: Discretionary grants.

Estimated Available Funds: $875,000.

Maximum Award: We will reject any application that proposes a budget exceeding $875,000 for a single budget period of 12 months. The Assistant Secretary for the Office of Special Education and Rehabilitative Services may change the maximum amount through a notice published in the **Federal Register**.

Estimated Number of Awards: 1.

Note: The Department is not bound by any estimates in this notice.

Project Period: Up to 60 months.

III. Eligibility Information

1. *Eligible Applicants:* Eligible applicants are limited to minority entities and Indian tribes as authorized by section 21(b)(2)(A) of the Rehabilitation Act. Section 21 of the Rehabilitation Act defines a ''minority entity'' as a historically Black college or university (a part B institution, as defined in section 322(2) of the Higher Education Act of 1965, as amended), a Hispanic-serving institution of higher education, an American Indian tribal college or university, or another institution of higher education whose minority student enrollment is at least 50 percent.

2. *Cost Sharing or Matching:* This competition does not require cost sharing or matching.

IV. Application and Submission Information

1. *Address to Request Application Package:* You can obtain an application package via the Internet or from the Education Publications Center (ED Pubs). To obtain a copy via the Internet, use the following address: *www.ed.gov/fund/grant/apply/grantapps/index.html.* To obtain a copy from ED Pubs, write, fax, or call the following: ED Pubs, U.S. Department of Education, P.O. Box 22207, Alexandria, VA 22304. Telephone, toll free: 1–877–433–7827. FAX: (703) 605–6794. If you use a

telecommunications device for the deaf (TDD) or a text telephone (TTY), call, toll free: 1–877–576–7734.

You can contact ED Pubs at its Web site, also: www.EDPubs.gov or at its email address: *edpubs@inet.ed.gov.*

If you request an application from ED Pubs, be sure to identify this competition as follows: CFDA number 84.133B–1.

Individuals with disabilities can obtain a copy of the application package in an accessible format (e.g., braille, large print, audiotape, or compact disc) by contacting the person or team listed under *Accessible Format* in section VIII of this notice.

2. *Content and Form of Application Submission:* Requirements concerning the content of an application, together with the forms you must submit, are in the application package for this competition. Page Limit: The application narrative (Part III of the application) is where you, the applicant, address the selection criteria that reviewers use to evaluate your application. We recommend that you limit Part III to the equivalent of no more than 100 pages, using the following standards:

• A ''page'' is 8.5″ x 11″, on one side only, with 1″ margins at the top, bottom, and both sides.

• Double space (no more than three lines per vertical inch) all text in the application narrative, including titles, headings, footnotes, quotations, references, and captions, as well as all text in charts, tables, figures, and graphs.

• Use a font that is either 12 point or larger or no smaller than 10 pitch (characters per inch).

• Use one of the following fonts: Times New Roman, Courier, Courier New, or Arial. An application submitted in any other font (including Times Roman or Arial Narrow) will not be accepted.

The recommended page limit does not apply to Part I, the cover sheet; Part II, the budget section, including the narrative budget justification; Part IV, the assurances and certifications; or the one-page abstract, the resumes, the bibliography, or the letters of support. However, the recommended page limit does apply to all of the application narrative section (Part III).

An applicant should consult NIDRR's Long-Range Plan for Fiscal Years 2013–2017 (78 FR 20299) (Plan) when preparing its application. The Plan is organized around the following research domains: (1) Community Living and Participation; (2) Health and Function; and (3) Employment.

3. *Submission Dates and Times:*

Applications Available: June 14, 2013.

Date of Pre-Application Meeting: Interested parties are invited to participate in a pre-application meeting and to receive information and technical assistance through individual consultation with NIDRR staff. The pre-application meeting will be held on July 5, 2013. Interested parties may participate in this meeting by conference call with NIDRR staff from the Office of Special Education and Rehabilitative Services between 1:00 p.m. and 3:00 p.m., Washington, DC time. NIDRR staff also will be available from 3:30 p.m. to 4:30 p.m., Washington, DC time, on the same day, by telephone, to provide information and technical assistance through individual consultation. For further information or to make arrangements to participate in the meeting via conference call or for an individual consultation, contact the person listed under **FOR FURTHER INFORMATION CONTACT** in section VII of this notice.

Deadline for Transmittal of Applications: August 13, 2013.

Applications for grants under this competition must be submitted electronically using the Grants.gov Apply site (Grants.gov). For information (including dates and times) about how to submit your application electronically, or in paper format by mail or hand delivery if you qualify for an exception to the electronic submission requirement, please refer to section IV.7. *Other Submission Requirements* of this notice.

We do not consider an application that does not comply with the deadline requirements.

Individuals with disabilities who need an accommodation or auxiliary aid in connection with the application process should contact the person listed under **FOR FURTHER INFORMATION CONTACT** in section VII of this notice. If the Department provides an accommodation or auxiliary aid to an individual with a disability in connection with the application process, the individual's application remains subject to all other requirements and limitations in this notice.

4. *Intergovernmental Review:* This program is not subject to Executive Order 12372 and the regulations in 34 CFR part 79.

5. *Funding Restrictions:* We reference regulations outlining funding restrictions in the *Applicable Regulations* section of this notice.

6. *Data Universal Numbering System Number, Taxpayer Identification Number, Central Contractor Registry, and System for Award Management:* To do business with the Department of Education, you must—

a. Have a Data Universal Numbering System (DUNS) number and a Taxpayer Identification Number (TIN);

b. Register both your DUNS number and TIN with the Central Contractor Registry (CCR)—and, after July 24, 2012, with the System for Award Management (SAM), the Government's primary registrant database;

c. Provide your DUNS number and TIN on your application; and

d. Maintain an active CRR or SAM registration with current information while your application is under review by the Department and, if you are awarded a grant, during the project period.

You can obtain a DUNS number from DUN and Bradstreet. A DUNS number can be created within one business day.

If you are a corporate entity, agency, institution, or organization, you can obtain a TIN from the Internal Revenue Service. If you are an individual, you can obtain a TIN from the Internal Revenue Service or the Social Security Administration. If you need a new TIN, please allow 2–5 weeks for your TIN to become active.

The CCR or SAM registration process may take five or more business days to complete. If you are currently registered with the CCR, you may not need to make any changes. However, please make certain that the TIN associated with your DUNS number is correct. Also note that you will need to update your registration annually. This may take three or more business days to complete. Information about SAM is available at SAM.gov.

In addition, if you are submitting your application via Grants.gov, you must (1) be designated by your organization as an Authorized Organization Representative (AOR); and (2) register yourself with Grants.gov as an AOR. Details on these steps are outlined at the following Grants.gov Web page: *www.grants.gov/aapplicants/get_registered.jsp.*

7. *Other Submission Requirements:* Applications for grants under this competition must be submitted electronically unless you qualify for an exception to this requirement in accordance with the instructions in this section.

a. Electronic Submission of Applications

Applications for grants under the RRTC on Research and Capacity Building for Minority Entities program, CFDA number 84.133B–1, must be submitted electronically using the Governmentwide Grants.gov Apply site at *www.Grants.gov.* Through this site,

you will be able to download a copy of the application package, complete it offline, and then upload and submit your application. You may not email an electronic copy of a grant application to us.

We will reject your application if you submit it in paper format unless, as described elsewhere in this section, you qualify for one of the exceptions to the electronic submission requirement *and* submit, no later than two weeks before the application deadline date, a written statement to the Department that you qualify for one of these exceptions. Further information regarding calculation of the date that is two weeks before the application deadline date is provided later in this section under *Exception to Electronic Submission Requirement.*

You may access the electronic grant application for the RRTC program at *www.Grants.gov.* You must search for the downloadable application package for this program by the CFDA number. Do not include the CFDA number's alpha suffix in your search (e.g., search for 84.133, not 84.133B).

Please note the following:

- When you enter the Grants.gov site, you will find information about submitting an application electronically through the site, as well as the hours of operation.
- Applications received by Grants.gov are date and time stamped. Your application must be fully uploaded and submitted and must be date and time stamped by the Grants.gov system no later than 4:30:00 p.m., Washington, DC time, on the application deadline date. Except as otherwise noted in this section, we will not accept your application if it is received—that is, date and time stamped by the Grants.gov system—after 4:30:00 p.m., Washington, DC time, on the application deadline date. We do not consider an application that does not comply with the deadline requirements. When we retrieve your application from Grants.gov, we will notify you if we are rejecting your application because it was date and time stamped by the Grants.gov system after 4:30:00 p.m., Washington, DC time, on the application deadline date.
- The amount of time it can take to upload an application will vary depending on a variety of factors, including the size of the application and the speed of your Internet connection. Therefore, we strongly recommend that you do not wait until the application deadline date to begin the submission process through Grants.gov.
- You should review and follow the Education Submission Procedures for submitting an application through Grants.gov that are included in the application package for this competition to ensure that you submit your application in a timely manner to the Grants.gov system. You can also find the Education Submission Procedures pertaining to Grants.gov under News and Events on the Department's G5 system home page at *www.G5.gov.*
- You will not receive additional point value because you submit your application in electronic format, nor will we penalize you if you qualify for an exception to the electronic submission requirement, as described elsewhere in this section, and submit your application in paper format.
- You must submit all documents electronically, including all information you typically provide on the following forms: the Application for Federal Assistance (SF 424), the Department of Education Supplemental Information for SF 424, Budget Information—Non-Construction Programs (ED 524), and all necessary assurances and certifications.
- You must upload any narrative sections and all other attachments to your application as files in a PDF (Portable Document) read-only, non-modifiable format. Do not upload an interactive or fillable PDF file. If you upload a file type other than a read-only, non-modifiable PDF or submit a password-protected file, we will not review that material.
- Your electronic application must comply with any page-limit requirements described in this notice.
- After you electronically submit your application, you will receive from Grants.gov an automatic notification of receipt that contains a Grants.gov tracking number. (This notification indicates receipt by Grants.gov only, not receipt by the Department.) The Department then will retrieve your application from Grants.gov and send a second notification to you by email. This second notification indicates that the Department has received your application and has assigned your application a PR/Award number (a Department-specified identifying number unique to your application).
- We may request that you provide us original signatures on forms at a later date.

Application Deadline Date Extension in Case of Technical Issues with the Grants.gov System: If you are experiencing problems submitting your application through Grants.gov, please contact the Grants.gov Support Desk, toll free, at 1–800–518–4726. You must obtain a Grants.gov Support Desk Case Number and must keep a record of it.

If you are prevented from electronically submitting your application on the application deadline date because of technical problems with the Grants.gov system, we will grant you an extension until 4:30:00 p.m., Washington, DC time, the following business day to enable you to transmit your application electronically or by hand delivery. You also may mail your application by following the mailing instructions described elsewhere in this notice.

If you submit an application after 4:30:00 p.m., Washington, DC time, on the application deadline date, please contact the person listed under **FOR FURTHER INFORMATION CONTACT** in section VII of this notice and provide an explanation of the technical problem you experienced with Grants.gov, along with the Grants.gov Support Desk Case Number. We will accept your application if we can confirm that a technical problem occurred with the Grants.gov system and that that problem affected your ability to submit your application by 4:30:00 p.m., Washington, DC time, on the application deadline date. The Department will contact you after a determination is made on whether your application will be accepted.

Note: The extensions to which we refer in this section apply only to the unavailability of, or technical problems with, the Grants.gov system. We will not grant you an extension if you failed to fully register to submit your application to Grants.gov before the application deadline date and time or if the technical problem you experienced is unrelated to the Grants.gov system.

Exception to Electronic Submission Requirement: You qualify for an exception to the electronic submission requirement, and may submit your application in paper format, if you are unable to submit an application through the Grants.gov system because—

- You do not have access to the Internet; or
- You do not have the capacity to upload large documents to the Grants.gov system; *and*
- No later than two weeks before the application deadline date (14 calendar days or, if the fourteenth calendar day before the application deadline date falls on a Federal holiday, the next business day following the Federal holiday), you mail or fax a written statement to the Department, explaining which of the two grounds for an exception prevents you from using the Internet to submit your application.

If you mail your written statement to the Department, it must be postmarked no later than two weeks before the application deadline date. If you fax your written statement to the Department, we must receive the faxed

statement no later than two weeks before the application deadline date.

Address and mail or fax your statement to: Marlene Spencer, U.S. Department of Education, 400 Maryland Avenue SW., Room 5133, PCP, Washington, DC 20202–2700. FAX: (202) 245–7323.

Your paper application must be submitted in accordance with the mail or hand delivery instructions described in this notice.

b. Submission of Paper Applications by Mail

If you qualify for an exception to the electronic submission requirement, you may mail (through the U.S. Postal Service or a commercial carrier) your application to the Department. You must mail the original and two copies of your application, on or before the application deadline date, to the Department at the following address: U.S. Department of Education, Application Control Center, Attention: (CFDA Number 84.133B–1), LBJ Basement Level 1, 400 Maryland Avenue SW., Washington, DC 20202–4260.

You must show proof of mailing consisting of one of the following:

(1) A legibly dated U.S. Postal Service postmark.

(2) A legible mail receipt with the date of mailing stamped by the U.S. Postal Service.

(3) A dated shipping label, invoice, or receipt from a commercial carrier.

(4) Any other proof of mailing acceptable to the Secretary of the U.S. Department of Education.

If you mail your application through the U.S. Postal Service, we do not accept either of the following as proof of mailing:

(1) A private metered postmark.

(2) A mail receipt that is not dated by the U.S. Postal Service.

If your application is postmarked after the application deadline date, we will not consider your application.

Note: The U.S. Postal Service does not uniformly provide a dated postmark. Before relying on this method, you should check with your local post office.

c. Submission of Paper Applications by Hand Delivery

If you qualify for an exception to the electronic submission requirement, you (or a courier service) may deliver your paper application to the Department by hand. You must deliver the original and two copies of your application by hand, on or before the application deadline date, to the Department at the following address: U.S. Department of Education, Application Control Center, Attention: (CFDA Number 84.133B–1), 550 12th Street SW., Room 7041, Potomac Center Plaza, Washington, DC 20202–4260.

The Application Control Center accepts hand deliveries daily between 8:00 a.m. and 4:30:00 p.m., Washington, DC time, except Saturdays, Sundays, and Federal holidays.

Note for Mail or Hand Delivery of Paper Applications: If you mail or hand deliver your application to the Department—

(1) You must indicate on the envelope and—if not provided by the Department—in Item 11 of the SF 424 the CFDA number, including suffix letter, if any, of the competition under which you are submitting your application; and

(2) The Application Control Center will mail to you a notification of receipt of your grant application. If you do not receive this notification within 15 business days from the application deadline date, you should call the U.S. Department of Education Application Control Center at (202) 245–6288.

V. Application Review Information

1. *Selection Criteria:* The selection criteria for this competition are from 34 CFR 350.54 and are listed in the application package.

2. *Review and Selection Process:* We remind potential applicants that in reviewing applications in any discretionary grant competition, the Secretary may consider, under 34 CFR 75.217(d)(3), the past performance of the applicant in carrying out a previous award, such as the applicant's use of funds, achievement of project objectives, and compliance with grant conditions. The Secretary may also consider whether the applicant failed to submit a timely performance report or submitted a report of unacceptable quality.

In addition, in making a competitive grant award, the Secretary also requires various assurances including those applicable to Federal civil rights laws that prohibit discrimination in programs or activities receiving Federal financial assistance from the Department of Education (34 CFR 100.4, 104.5, 106.4, 108.8, and 110.23).

3. *Special Conditions:* Under 34 CFR 74.14 and 80.12, the Secretary may impose special conditions on a grant if the applicant or grantee is not financially stable; has a history of unsatisfactory performance; has a financial or other management system that does not meet the standards in 34 CFR parts 74 or 80, as applicable; has not fulfilled the conditions of a prior grant; or is otherwise not responsible.

VI. Award Administration Information

1. *Award Notices:* If your application is successful, we notify your U.S. Representative and U.S. Senators and send you a Grant Award Notification (GAN) or we may send you an email containing a link to access an electronic version of your GAN. We may notify you informally, also.

If your application is not evaluated or not selected for funding, we notify you.

2. *Administrative and National Policy Requirements:* We identify administrative and national policy requirements in the application package and reference these and other requirements in the *Applicable Regulations* section of this notice.

We reference the regulations outlining the terms and conditions of an award in the *Applicable Regulations* section of this notice and include these and other specific conditions in the GAN. The GAN also incorporates your approved application as part of your binding commitments under the grant.

3. *Reporting:* (a) If you apply for a grant under this competition, you must ensure that you have in place the necessary processes and systems to comply with the reporting requirements in 2 CFR part 170 should you receive funding under the competition. This does not apply if you have an exception under 2 CFR 170.110(b).

(b) At the end of your project period, you must submit a final performance report, including financial information, as directed by the Secretary. If you receive a multi-year award, you must submit an annual performance report that provides the most current performance and financial expenditure information as directed by the Secretary under 34 CFR 75.118. The Secretary may also require more frequent performance reports under 34 CFR 75.720(c). For specific requirements on reporting, please go to *www.ed.gov/fund/grant/apply/appforms/appforms.html*.

4. *Performance Measures:* To evaluate the overall success of its research program, NIDRR assesses the quality of its funded projects through a review of grantee performance and products. Each year, NIDRR examines a portion of its grantees to determine:

- The number of products (e.g., new or improved tools, methods, discoveries, standards, interventions, programs, or devices) developed or tested with NIDRR funding that have been judged by expert panels to be of high quality and to advance the field.
- The average number of publications per award based on NIDRR-funded research and development activities in refereed journals.

• The percentage of new NIDRR grants that assess the effectiveness of interventions, programs, and devices using rigorous methods.

• The number of new or improved NIDRR-funded assistive and universally designed technologies, products, and devices transferred to industry for potential commercialization.

NIDRR uses information submitted by grantees as part of their Annual Performance Reports for these reviews.

Department of Education program performance reports, which include information on NIDRR programs, are available on the Department's Web site: *www.ed.gov/about/offices/list/opepd/sas/index.html*.

5. *Continuation Awards:* In making a continuation award, the Secretary may consider, under 34 CFR 75.253, the extent to which a grantee has made ''substantial progress toward meeting the objectives in its approved application.'' This consideration includes the review of a grantee's progress in meeting the targets and projected outcomes in its approved application, and whether the grantee has expended funds in a manner that is consistent with its approved application and budget. In making a continuation grant, the Secretary also considers whether the grantee is operating in compliance with the assurances in its approved application, including those applicable to Federal civil rights laws that prohibit discrimination in programs or activities receiving Federal financial assistance from the Department (34 CFR 100.4, 104.5, 106.4, 108.8, and 110.23).

VII. Agency Contact

FOR FURTHER INFORMATION CONTACT: Marlene Spencer, U.S. Department of Education, 400 Maryland Avenue SW., Room 5133, PCP, Washington, DC 20202–2700. Telephone: (202) 245–7532 or by email: *marlene.spencer@ed.gov*.

If you use a TDD or a TTY call the Federal Relay Service (FRS), toll free, at 1–800–877–8339.

VIII. Other Information

Accessible Format: Individuals with disabilities can obtain this document and a copy of the application package in an accessible format (e.g., braille, large print, audiotape, or compact disc) by contacting the Grants and Contracts Services Team, U.S. Department of Education, 400 Maryland Avenue SW., Room 5075, PCP, Washington, DC 20202–2550. Telephone: (202) 245–7363. If you use a TDD or a TTY, call the FRS, toll-free, at 1–800–877–8339.

Electronic Access to This Document: The official version of this document is the document published in the **Federal Register**. Free Internet access to the official edition of the **Federal Register** and the Code of Federal Regulations is available via the Federal Digital System at: *www.gpo.gov/fdsys*. At this site you can view this document, as well as all other documents of this Department published in the **Federal Register,** in text or Adobe Portable Document Format (PDF). To use PDF you must have Adobe Acrobat Reader, which is available free at the site.

You may also access documents of the Department published in the **Federal Register** by using the article search feature at: *www.federalregister.gov*. Specifically, through the advanced search feature at this site, you can limit your search to documents published by the Department.

Dated: June 11, 2013.

Michael K. Yudin,

Delegated the authority to perform the functions and duties of the Assistant Secretary for Special Education and Rehabilitative Services.

[FR Doc. 2013–14222 Filed 6–13–13; 8:45 am]

BILLING CODE 4000–01–P

DEPARTMENT OF EDUCATION

Applications for New Awards; National Institute on Disability and Rehabilitation Research—Disability and Rehabilitation Research Projects and Centers Program—Rehabilitation Engineering Research Centers

AGENCY: Office of Special Education and Rehabilitative Services, Department of Education.

ACTION: Notice.

Overview Information

National Institute on Disability and Rehabilitation Research (NIDRR)—Disability and Rehabilitation Research Projects and Centers Program—Rehabilitation Engineering Research Centers (RERCs)—Universal Interfaces and Information Technology Access.

Notice inviting applications for new awards for fiscal year (FY) 2013.

Catalog of Federal Domestic Assistance (CFDA) Number: 84.133E–4.

DATES:

Applications Available: June 14, 2013.

Date of Pre-Application Meeting: July 5, 2013.

Deadline for Transmittal of Applications: August 13, 2013.

Full Text of Announcement

I. Funding Opportunity Description

Purpose of Program: The purpose of the Disability and Rehabilitation Research Projects and Centers Program is to plan and conduct research, demonstration projects, training, and related activities, including international activities, to develop methods, procedures, and rehabilitation technology that maximize the full inclusion and integration into society, employment, independent living, family support, and economic and social self-sufficiency of individuals with disabilities, especially individuals with the most severe disabilities; and to improve the effectiveness of services authorized under the Rehabilitation Act of 1973, as amended (Rehabilitation Act).

Rehabilitation Engineering Research Centers Program

The purpose of NIDRR's RERCs program, which is funded through the Disability and Rehabilitation Research Projects and Centers Program, is to improve the effectiveness of services authorized under the Rehabilitation Act. It does so by conducting advanced engineering research, developing and evaluating innovative technologies, facilitating service delivery system changes, stimulating the production and distribution of new technologies and equipment in the private sector, and providing training opportunities. RERCs seek to solve rehabilitation problems and remove environmental barriers to improvements in employment, community living and participation, and health and function outcomes of individuals with disabilities.

Priority: This priority is from the notice of final priority for this program, published elsewhere in this issue of the **Federal Register**.

Absolute Priority: For FY 2013 and any subsequent year in which we make awards from the list of unfunded applicants from this competition, this priority is an absolute priority. Under 34 CFR 75.105(c)(3) we consider only applications that meet this priority.

This priority is:

Universal Interfaces and Information Technology Access

Note: The full text of this priority is included in the pertinent notice of final priority published in this issue of the **Federal Register** and in the application package for this competition.

Program Authority: 29 U.S.C. 762(g) and 764(b)(3).

Applicable Regulations: (a) The Education Department General Administrative Regulations in 34 CFR parts 74, 75, 77, 80, 81, 82, 84, 86, and 97. (b) The Education Department suspension and debarment regulations in 2 CFR part 3485. (c) The regulations

for this program in 34 CFR part 350. (d) The notice of final priority for this program, published elsewhere in this issue of the **Federal Register**.

Note: The regulations in 34 CFR part 86 apply to institutions of higher education (IHEs) only.

II. Award Information

Type of Award: Discretionary grants.

Estimated Available Funds: $925,000.

Maximum Award: We will reject any application that proposes a budget exceeding $925,000 for a single budget period of 12 months. The Assistant Secretary for the Office of Special Education and Rehabilitative Services may change the maximum amount through a notice published in the **Federal Register**.

Estimated Number of Awards: 1.

Note: The Department is not bound by any estimates in this notice.

Project Period: Up to 60 months.

III. Eligibility Information

1. *Eligible Applicants:* States; public or private agencies, including for-profit agencies; public or private organizations, including for-profit organizations; IHEs; and Indian tribes and tribal organizations.

2. *Cost Sharing or Matching:* This competition does not require cost sharing or matching.

IV. Application and Submission Information

1. *Address to Request Application Package:* You can obtain an application package via the Internet or from the Education Publications Center (ED Pubs). To obtain a copy via the Internet, use the following address: *www.ed.gov/fund/grant/apply/grantapps/index.html*. To obtain a copy from ED Pubs, write, fax, or call the following: ED Pubs, U.S. Department of Education, P.O. Box 22207, Alexandria, VA 22304. Telephone, toll free: 1–877–433–7827. FAX: (703) 605–6794. If you use a telecommunications device for the deaf (TDD) or a text telephone (TTY), call, toll free: 1–877–576–7734.

You can contact ED Pubs at its Web site, also: *www.EDPubs.gov* or at its email address: *edpubs@inet.ed.gov*.

If you request an application from ED Pubs, be sure to identify this competition as follows: CFDA number 84.133E.

Individuals with disabilities can obtain a copy of the application package in an accessible format (e.g., braille, large print, audiotape, or compact disc) by contacting the person or team listed under *Accessible Format* in section VIII of this notice.

2. *Content and Form of Application Submission:* Requirements concerning the content of an application, together with the forms you must submit, are in the application package for this competition. Page Limit: The application narrative (Part III of the application) is where you, the applicant, address the selection criteria that reviewers use to evaluate your application. We recommend that you limit Part III to the equivalent of no more than 100 pages, using the following standards:

- A ''page'' is 8.5″ x 11″, on one side only, with 1″ margins at the top, bottom, and both sides.
- Double space (no more than three lines per vertical inch) all text in the application narrative, including titles, headings, footnotes, quotations, references, and captions, as well as all text in charts, tables, figures, and graphs.
- Use a font that is either 12 point or larger or no smaller than 10 pitch (characters per inch).
- Use one of the following fonts: Times New Roman, Courier, Courier New, or Arial. An application submitted in any other font (including Times Roman or Arial Narrow) will not be accepted.

The recommended page limit does not apply to Part I, the cover sheet; Part II, the budget section, including the narrative budget justification; Part IV, the assurances and certifications; or the one-page abstract, the resumes, the bibliography, or the letters of support. However, the recommended page limit does apply to all of the application narrative section (Part III).

An applicant should consult NIDRR's currently approved Long-Range Plan (Plan) for Fiscal Years 2013–2017, when preparing its application. The Plan, which was published in the **Federal Register** on April 4, 2013 (78 FR 20299), can be accessed on the Internet at the following site: *www.ed.gov/about/offices/list/osers/nidrr/policy.html*.

3. *Submission Dates and Times:*

Applications Available: June 14, 2013.

Date of Pre-Application Meeting: Interested parties are invited to participate in a pre-application meeting and to receive information and technical assistance through individual consultation with NIDRR staff. The pre-application meeting will be held on July 5, 2013. Interested parties may participate in this meeting by conference call with NIDRR staff from the Office of Special Education and Rehabilitative Services between 1:00 p.m. and 3:00 p.m., Washington, DC time. NIDRR staff also will be available from 3:30 p.m. to 4:30 p.m., Washington, DC time, on the same day, by telephone, to provide information and technical assistance through individual consultation. For further information or to make arrangements to participate in the meeting via conference call or for an individual consultation, contact the person listed under **FOR FURTHER INFORMATION CONTACT** in section VII of this notice.

Deadline for Transmittal of Applications: August 13, 2013.

Applications for grants under this competition must be submitted electronically using the Grants.gov Apply site (Grants.gov). For information (including dates and times) about how to submit your application electronically, or in paper format by mail or hand delivery if you qualify for an exception to the electronic submission requirement, please refer to section IV. 7. *Other Submission Requirements* of this notice.

We do not consider an application that does not comply with the deadline requirements.

Individuals with disabilities who need an accommodation or auxiliary aid in connection with the application process should contact the person listed under **FOR FURTHER INFORMATION CONTACT** in section VII of this notice. If the Department provides an accommodation or auxiliary aid to an individual with a disability in connection with the application process, the individual's application remains subject to all other requirements and limitations in this notice.

4. *Intergovernmental Review:* This program is not subject to Executive Order 12372 and the regulations in 34 CFR part 79.

5. *Funding Restrictions:* We reference regulations outlining funding restrictions in the *Applicable Regulations* section of this notice.

6. *Data Universal Numbering System Number, Taxpayer Identification Number, Central Contractor Registry, and System for Award Management:* To do business with the Department of Education, you must—

a. Have a Data Universal Numbering System (DUNS) number and a Taxpayer Identification Number (TIN);

b. Register both your DUNS number and TIN with the Central Contractor Registry (CCR)—and, after July 24, 2012, with the System for Award Management (SAM), the Government's primary registrant database;

c. Provide your DUNS number and TIN on your application; and

d. Maintain an active CRR or SAM registration with current information while your application is under review

by the Department and, if you are awarded a grant, during the project period.

You can obtain a DUNS number from DUN and Bradstreet. A DUNS number can be created within one business day.

If you are a corporate entity, agency, institution, or organization, you can obtain a TIN from the Internal Revenue Service. If you are an individual, you can obtain a TIN from the Internal Revenue Service or the Social Security Administration. If you need a new TIN, please allow 2–5 weeks for your TIN to become active.

The CCR or SAM registration process may take five or more business days to complete. If you are currently registered with the CCR, you may not need to make any changes. However, please make certain that the TIN associated with your DUNS number is correct. Also note that you will need to update your registration annually. This may take three or more business days to complete. Information about SAM is available at SAM.gov.

In addition, if you are submitting your application via Grants.gov, you must (1) be designated by your organization as an Authorized Organization Representative (AOR); and (2) register yourself with Grants.gov as an AOR. Details on these steps are outlined at the following Grants.gov Web page: *www.grants.gov/aapplicants/get_registered.jsp*.

7. *Other Submission Requirements:* Applications for grants under this competition must be submitted electronically unless you qualify for an exception to this requirement in accordance with the instructions in this section.

a. Electronic Submission of Applications

Applications for grants under the RERC on Universal Interfaces and Information Technology Access program, CFDA Number 84.133E–4, must be submitted electronically using the Governmentwide Grants.gov Apply site at *www.Grants.gov.* Through this site, you will be able to download a copy of the application package, complete it offline, and then upload and submit your application. You may not email an electronic copy of a grant application to us.

We will reject your application if you submit it in paper format unless, as described elsewhere in this section, you qualify for one of the exceptions to the electronic submission requirement *and* submit, no later than two weeks before the application deadline date, a written statement to the Department that you qualify for one of these exceptions. Further information regarding calculation of the date that is two weeks before the application deadline date is provided later in this section under *Exception to Electronic Submission Requirement.*

You may access the electronic grant application for the RERC program at *www.Grants.gov.* You must search for the downloadable application package for this program by the CFDA number. Do not include the CFDA number's alpha suffix in your search (e.g., search for 84.133, not 84.133E).

Please note the following:

- When you enter the Grants.gov site, you will find information about submitting an application electronically through the site, as well as the hours of operation.
- Applications received by Grants.gov are date and time stamped. Your application must be fully uploaded and submitted and must be date and time stamped by the Grants.gov system no later than 4:30:00 p.m., Washington, DC time, on the application deadline date. Except as otherwise noted in this section, we will not accept your application if it is received—that is, date and time stamped by the Grants.gov system—after 4:30:00 p.m., Washington, DC time, on the application deadline date. We do not consider an application that does not comply with the deadline requirements. When we retrieve your application from Grants.gov, we will notify you if we are rejecting your application because it was date and time stamped by the Grants.gov system after 4:30:00 p.m., Washington, DC time, on the application deadline date.
- The amount of time it can take to upload an application will vary depending on a variety of factors, including the size of the application and the speed of your Internet connection. Therefore, we strongly recommend that you do not wait until the application deadline date to begin the submission process through Grants.gov.
- You should review and follow the Education Submission Procedures for submitting an application through Grants.gov that are included in the application package for this competition to ensure that you submit your application in a timely manner to the Grants.gov system. You can also find the Education Submission Procedures pertaining to Grants.gov under News and Events on the Department's G5 system home page at *www.G5.gov.*
- You will not receive additional point value because you submit your application in electronic format, nor will we penalize you if you qualify for an exception to the electronic submission requirement, as described elsewhere in this section, and submit your application in paper format.
- You must submit all documents electronically, including all information you typically provide on the following forms: the Application for Federal Assistance (SF 424), the Department of Education Supplemental Information for SF 424, Budget Information—Non-Construction Programs (ED 524), and all necessary assurances and certifications.
- You must upload any narrative sections and all other attachments to your application as files in a PDF (Portable Document) read-only, non-modifiable format. Do not upload an interactive or fillable PDF file. If you upload a file type other than a read-only, non-modifiable PDF or submit a password-protected file, we will not review that material.
- Your electronic application must comply with any page-limit requirements described in this notice.
- After you electronically submit your application, you will receive from Grants.gov an automatic notification of receipt that contains a Grants.gov tracking number. (This notification indicates receipt by Grants.gov only, not receipt by the Department.) The Department then will retrieve your application from Grants.gov and send a second notification to you by email. This second notification indicates that the Department has received your application and has assigned your application a PR/Award number (a Department-specified identifying number unique to your application).
- We may request that you provide us original signatures on forms at a later date.

Application Deadline Date Extension in Case of Technical Issues with the Grants.gov System: If you are experiencing problems submitting your application through Grants.gov, please contact the Grants.gov Support Desk, toll free, at 1–800–518–4726. You must obtain a Grants.gov Support Desk Case Number and must keep a record of it.

If you are prevented from electronically submitting your application on the application deadline date because of technical problems with the Grants.gov system, we will grant you an extension until 4:30:00 p.m., Washington, DC time, the following business day to enable you to transmit your application electronically or by hand delivery. You also may mail your application by following the mailing instructions described elsewhere in this notice.

If you submit an application after 4:30:00 p.m., Washington, DC time, on the application deadline date, please contact the person listed under **FOR**

FURTHER INFORMATION CONTACT in section VII of this notice and provide an explanation of the technical problem you experienced with Grants.gov, along with the Grants.gov Support Desk Case Number. We will accept your application if we can confirm that a technical problem occurred with the Grants.gov system and that that problem affected your ability to submit your application by 4:30:00 p.m., Washington, DC time, on the application deadline date. The Department will contact you after a determination is made on whether your application will be accepted.

Note: The extensions to which we refer in this section apply only to the unavailability of, or technical problems with, the Grants.gov system. We will not grant you an extension if you failed to fully register to submit your application to Grants.gov before the application deadline date and time or if the technical problem you experienced is unrelated to the Grants.gov system.

Exception to Electronic Submission Requirement: You qualify for an exception to the electronic submission requirement, and may submit your application in paper format, if you are unable to submit an application through the Grants.gov system because—

- You do not have access to the Internet; or
- You do not have the capacity to upload large documents to the Grants.gov system; *and*
- No later than two weeks before the application deadline date (14 calendar days or, if the fourteenth calendar day before the application deadline date falls on a Federal holiday, the next business day following the Federal holiday), you mail or fax a written statement to the Department, explaining which of the two grounds for an exception prevents you from using the Internet to submit your application.

If you mail your written statement to the Department, it must be postmarked no later than two weeks before the application deadline date. If you fax your written statement to the Department, we must receive the faxed statement no later than two weeks before the application deadline date.

Address and mail or fax your statement to: Marlene Spencer, U.S. Department of Education, 400 Maryland Avenue SW., Room 5133, PCP, Washington, DC 20202–2700. FAX: (202) 245–7323.

Your paper application must be submitted in accordance with the mail or hand delivery instructions described in this notice.

b. *Submission of Paper Applications by Mail.* If you qualify for an exception to the electronic submission requirement, you may mail (through the U.S. Postal Service or a commercial carrier) your application to the Department. You must mail the original and two copies of your application, on or before the application deadline date, to the Department at the following address: U.S. Department of Education, Application Control Center, Attention: (CFDA Number 84.133E–4), LBJ Basement Level 1, 400 Maryland Avenue SW., Washington, DC 20202–4260.

You must show proof of mailing consisting of one of the following:

(1) A legibly dated U.S. Postal Service postmark.

(2) A legible mail receipt with the date of mailing stamped by the U.S. Postal Service.

(3) A dated shipping label, invoice, or receipt from a commercial carrier.

(4) Any other proof of mailing acceptable to the Secretary of the U.S. Department of Education.

If you mail your application through the U.S. Postal Service, we do not accept either of the following as proof of mailing:

(1) A private metered postmark.

(2) A mail receipt that is not dated by the U.S. Postal Service.

If your application is postmarked after the application deadline date, we will not consider your application.

Note: The U.S. Postal Service does not uniformly provide a dated postmark. Before relying on this method, you should check with your local post office.

c. *Submission of Paper Applications by Hand Delivery.* If you qualify for an exception to the electronic submission requirement, you (or a courier service) may deliver your paper application to the Department by hand. You must deliver the original and two copies of your application by hand, on or before the application deadline date, to the Department at the following address: U.S. Department of Education, Application Control Center, Attention: (CFDA Number 84.133E–4), 550 12th Street SW., Room 7041, Potomac Center Plaza, Washington, DC 20202–4260.

The Application Control Center accepts hand deliveries daily between 8:00 a.m. and 4:30:00 p.m., Washington, DC time, except Saturdays, Sundays, and Federal holidays.

Note for Mail or Hand Delivery of Paper Applications: If you mail or hand deliver your application to the Department—

(1) You must indicate on the envelope and—if not provided by the Department—in Item 11 of the SF 424 the CFDA number, including suffix letter, if any, of the competition under which you are submitting your application; and

(2) The Application Control Center will mail to you a notification of receipt of your grant application. If you do not receive this notification within 15 business days from the application deadline date, you should call the U.S. Department of Education Application Control Center at (202) 245–6288.

V. Application Review Information

1. *Selection Criteria:* The selection criteria for this competition are from 34 CFR 350.54 and are listed in the application package.

2. *Review and Selection Process:* We remind potential applicants that in reviewing applications in any discretionary grant competition, the Secretary may consider, under 34 CFR 75.217(d)(3), the past performance of the applicant in carrying out a previous award, such as the applicant's use of funds, achievement of project objectives, and compliance with grant conditions. The Secretary may also consider whether the applicant failed to submit a timely performance report or submitted a report of unacceptable quality.

In addition, in making a competitive grant award, the Secretary also requires various assurances including those applicable to Federal civil rights laws that prohibit discrimination in programs or activities receiving Federal financial assistance from the Department of Education (34 CFR 100.4, 104.5, 106.4, 108.8, and 110.23).

3. *Special Conditions:* Under 34 CFR 74.14 and 80.12, the Secretary may impose special conditions on a grant if the applicant or grantee is not financially stable; has a history of unsatisfactory performance; has a financial or other management system that does not meet the standards in 34 CFR parts 74 or 80, as applicable; has not fulfilled the conditions of a prior grant; or is otherwise not responsible.

VI. Award Administration Information

1. *Award Notices:* If your application is successful, we notify your U.S. Representative and U.S. Senators and send you a Grant Award Notification (GAN) or we may send you an email containing a link to access an electronic version of your GAN. We may notify you informally, also.

If your application is not evaluated or not selected for funding, we notify you.

2. *Administrative and National Policy Requirements:* We identify administrative and national policy requirements in the application package and reference these and other requirements in the *Applicable Regulations* section of this notice.

We reference the regulations outlining the terms and conditions of an award in the *Applicable Regulations* section of

this notice and include these and other specific conditions in the GAN. The GAN also incorporates your approved application as part of your binding commitments under the grant.

3. *Reporting:* (a) If you apply for a grant under this competition, you must ensure that you have in place the necessary processes and systems to comply with the reporting requirements in 2 CFR part 170 should you receive funding under the competition. This does not apply if you have an exception under 2 CFR 170.110(b).

(b) At the end of your project period, you must submit a final performance report, including financial information, as directed by the Secretary. If you receive a multi-year award, you must submit an annual performance report that provides the most current performance and financial expenditure information as directed by the Secretary under 34 CFR 75.118. The Secretary may also require more frequent performance reports under 34 CFR 75.720(c). For specific requirements on reporting, please go to *www.ed.gov/fund/grant/apply/appforms/appforms.html.*

4. *Performance Measures:* To evaluate the overall success of its research program, NIDRR assesses the quality of its funded projects through a review of grantee performance and products. Each year, NIDRR examines a portion of its grantees to determine:

- The number of products (e.g., new or improved tools, methods, discoveries, standards, interventions, programs, or devices) developed or tested with NIDRR funding that have been judged by expert panels to be of high quality and to advance the field.
- The average number of publications per award based on NIDRR-funded research and development activities in refereed journals.
- The percentage of new NIDRR grants that assess the effectiveness of interventions, programs, and devices using rigorous methods.
- The number of new or improved NIDRR-funded assistive and universally designed technologies, products, and devices transferred to industry for potential commercialization.

NIDRR uses information submitted by grantees as part of their Annual Performance Reports for these reviews.

Department of Education program performance reports, which include information on NIDRR programs, are available on the Department's Web site: *www.ed.gov/about/offices/list/opepd/sas/index.html.*

5. *Continuation Awards:* In making a continuation award, the Secretary may consider, under 34 CFR 75.253, the extent to which a grantee has made ''substantial progress toward meeting the objectives in its approved application.'' This consideration includes the review of a grantee's progress in meeting the targets and projected outcomes in its approved application, and whether the grantee has expended funds in a manner that is consistent with its approved application and budget. In making a continuation grant, the Secretary also considers whether the grantee is operating in compliance with the assurances in its approved application, including those applicable to Federal civil rights laws that prohibit discrimination in programs or activities receiving Federal financial assistance from the Department (34 CFR 100.4, 104.5, 106.4, 108.8, and 110.23).

VII. Agency Contact

FOR FURTHER INFORMATION CONTACT: Marlene Spencer, U.S. Department of Education, 400 Maryland Avenue SW., Room 5133, PCP, Washington, DC 20202–2700. Telephone: (202) 245–7532 or by email: *marlene.spencer@ed.gov.*

If you use a TDD or a TTY call the Federal Relay Service (FRS), toll free, at 1–800–877–8339.

VIII. Other Information

Accessible Format: Individuals with disabilities can obtain this document and a copy of the application package in an accessible format (e.g., braille, large print, audiotape, or compact disc) by contacting the Grants and Contracts Services Team, U.S. Department of Education, 400 Maryland Avenue SW., Room 5075, PCP, Washington, DC 20202–2550. Telephone: (202) 245–7363. If you use a TDD or a TTY call the FRS, toll-free, at 1–800–877–8339.

Electronic Access to This Document: The official version of this document is the document published in the **Federal Register**. Free Internet access to the official edition of the **Federal Register** and the Code of Federal Regulations is available via the Federal Digital System at: *Agenda:* At this site you can view this document, as well as all other documents of this Department published in the **Federal Register**, in text or Adobe Portable Document Format (PDF). To use PDF you must have Adobe Acrobat Reader, which is available free at the site.

You may also access documents of the Department published in the **Federal Register** by using the article search feature at: *www.federalregister.gov.* Specifically, through the advanced search feature at this site, you can limit your search to documents published by the Department.

Dated: June 11, 2013.

Michael K. Yudin,

Delegated the authority to perform the functions and the duties of the Assistant Secretary for Special Education and Rehabilitative Services.

[FR Doc. 2013–14220 Filed 6–13–13; 8:45 am]

BILLING CODE 4000–01–P

DEPARTMENT OF ENERGY

Office of Energy Efficiency and Renewable Energy

[Case No. RF–031]

Notice of Petition for Waiver of Panasonic Appliances Refrigeration Systems Corporation of America Corporation (PAPRSA) From the Department of Energy Residential Refrigerator and Refrigerator-Freezer Test Procedure and Grant of Interim Waiver

AGENCY: Office of Energy Efficiency and Renewable Energy, Department of Energy.

ACTION: Notice of Petition for Waiver, Notice of Granting Application for Interim Waiver, and Request for Public Comments.

SUMMARY: This notice announces receipt of a petition for waiver from Panasonic Appliances Refrigeration Systems Corporation of America (PAPRSA) seeking an exemption from specified portions of the U.S. Department of Energy (DOE) test procedure for determining the energy consumption of electric refrigerators and refrigerator-freezers. PAPRSA's request pertains to the specific hybrid wine chiller/beverage center basic models set forth in its petition. PAPRSA seeks permission to use an alternate test procedure to test the wine chiller compartment of these devices at 55 °F instead of the prescribed temperature of 38 °F. That procedure would apply a K factor (correction factor) value of 0.85 when calculating the energy consumption of a tested model and replace the energy consumption calculation currently required under 10 CFR Part 430, Appendix A1. DOE solicits comments, data, and information concerning PAPRSA's petition and the suggested alternate test procedure. Today's notice also grants PAPRSA with an interim waiver from the electric refrigerator-freezer test procedure, subject to use of the alternative test procedure set forth in this notice.

DATES: DOE will accept comments, data, and information with respect to the PAPRSA Petition until July 15, 2013.

ADDRESSES: You may submit comments, identified by case number ''RF–031,'' by any of the following methods:

• *Federal eRulemaking Portal: http://www.regulations.gov.* Follow the instructions for submitting comments.

• *Email: AS_Waiver_Requests@ee.doe.gov* Include the case number [Case No. RF–031] in the subject line of the message.

• *Mail:* Ms. Brenda Edwards, U.S. Department of Energy, Building Technologies Program, Mailstop EE–2J/1000 Independence Avenue SW., Washington, DC 20585–0121. Telephone: (202) 586–2945. Please submit one signed original paper copy.

• *Hand Delivery/Courier:* Ms. Brenda Edwards, U.S. Department of Energy, Building Technologies Program, 950 L'Enfant Plaza SW., Suite 600, Washington, DC 20024. Please submit one signed original paper copy.

Docket: For access to the docket to review the background documents relevant to this matter, you may visit the U.S. Department of Energy, 950 L'Enfant Plaza SW., Washington, DC, 20024; (202) 586–2945, between 9:00 a.m. and 4:00 p.m., Monday through Friday, except Federal holidays. Available documents include the following items: (1) This notice; (2) public comments received; (3) the petition for waiver and application for interim waiver; and (4) prior DOE rulemakings regarding similar refrigerator-freezers. Please call Ms. Brenda Edwards at the above telephone number for additional information.

FOR FURTHER INFORMATION CONTACT: Mr. Bryan Berringer, U.S. Department of Energy, Building Technologies Program, Mail Stop EE–2J, Forrestal Building, 1000 Independence Avenue SW., Washington, DC 20585–0121. Telephone: (202) 586–0371. Email: *Bryan.Berringer@ee.doe.gov*.

Mr. Michael Kido, U.S. Department of Energy, Office of the General Counsel, Mail Stop GC–71, Forrestal Building, 1000 Independence Avenue SW., Washington, DC 20585–0103. Telephone: (202) 586–8145. Email: *Michael.Kido@hq.doe.govmailto:*.

SUPPLEMENTARY INFORMATION:

I. Background and Authority

Title III, Part B of the Energy Policy and Conservation Act of 1975 (EPCA), Public Law 94–163 (42 U.S.C. 6291–6309, as codified), established the Energy Conservation Program for Consumer Products Other Than Automobiles, a program covering most major household appliances, which includes the electric refrigerators and refrigerator-freezers that are the focus of this notice.[1] Part B includes definitions, test procedures, labeling provisions, energy conservation standards, and the authority to require information and reports from manufacturers. Further, Part B authorizes the Secretary of Energy to prescribe test procedures that are reasonably designed to produce results which measure the energy efficiency, energy use, or estimated annual operating costs of a covered product, and that are not unduly burdensome to conduct. (42 U.S.C. 6293(b)(3)) The test procedure for electric refrigerators and electric refrigerator-freezers is contained in 10 CFR part 430, subpart B, appendix A1.

The regulations set forth in 10 CFR 430.27 contain provisions that enable a person to seek a waiver from the test procedure requirements for covered products. The Assistant Secretary for Energy Efficiency and Renewable Energy (the Assistant Secretary) will grant a waiver if it is determined that the basic model for which the petition for waiver was submitted contains one or more design characteristics that prevents testing of the basic model according to the prescribed test procedures, or if the prescribed test procedures may evaluate the basic model in a manner so unrepresentative of its true energy consumption characteristics as to provide materially inaccurate comparative data. 10 CFR 430.27(l). Petitioners must include in their petition any alternate test procedures known to the petitioner to evaluate the basic model in a manner representative of its energy consumption. The Assistant Secretary may grant the waiver subject to conditions, including adherence to alternate test procedures. 10 CFR 430.27(l). Waivers remain in effect pursuant to the provisions of 10 CFR 430.27(m).

The waiver process also allows the Assistant Secretary to grant an interim waiver from test procedure requirements to manufacturers that have petitioned DOE for a waiver of such prescribed test procedures. 10 CFR 430.27(g). An interim waiver remains in effect for 180 days or until DOE issues its determination on the petition for waiver, whichever occurs earlier. DOE may extend an interim waiver for an additional 180 days. 10 CFR 430.27(h).

II. Petition for Waiver of Test Procedure

On April 29, 2013, PAPRSA submitted a petition for waiver from the test procedure applicable to residential electric refrigerators and refrigerator-freezers set forth in 10 CFR part 430, Subpart B, Appendix A1. In its petition, PAPRSA has set forth an alternate test procedure and notes in support of its petition that DOE previously granted Sanyo E&E Corporation (Sanyo) a similar waiver pertaining to its wine chiller/beverage centers. See 77 FR 19654 (April 2, 2012) (petition for waiver) and 77 FR 49443 (August 16, 2012) (Decision and Order). The petition also notes that Sanyo E&E Corporation has since changed its corporate name to Panasonic Appliances Refrigeration Systems Corporation of America, meaning that it is the same manufacturer to which DOE granted the August 2012 waiver. On October 4, 2012, DOE issued a correction notice to the Decision and Order. That notice incorporated a K factor (correction factor) value of 0.85 when calculating the energy consumption of a tested model (77 FR 60688). PAPRSA is requesting a waiver with respect to the test procedures for its hybrid models that consist of a single cabinet equipped with a refrigerated beverage compartment in the top portion and a wine storage compartment in the bottom portion of each unit. DOE issued guidance that clarified the test procedures to be used for hybrid products such as the PAPRSA models at issue, which is available at the following link: *http://www1.eere.energy.gov/buildings/appliance_standards/residential/pdfs/refrigerator_definition_faq.pdf*. This guidance specifies that basic models such as the ones PAPRSA identifies in its petition, which do not have a separate wine storage compartment with a separate exterior door, are to be tested according to the DOE test procedure in Appendix A1, with the temperatures specified therein. PAPRSA asserts that the wine storage compartment cannot be tested at the prescribed temperature of 38 °F, because the minimum compartment temperature is 45 °F.

PAPRSA also requests an interim waiver from the existing DOE test procedure. An interim waiver may be granted if it is determined that the applicant will experience economic hardship if the application for interim waiver is denied, if it appears likely that the petition for waiver will be granted, and/or the Assistant Secretary determines that it would be desirable for public policy reasons to grant immediate relief pending a determination of the petition for waiver. See 10 CFR 430.27(g).

For the reasons discussed above, DOE has determined that use of the currently required DOE test procedure would provide test results so unrepresentative

[1] For editorial reasons, upon codification in the U.S. Code, Part B was re-designated Part A.

as to provide materially inaccurate comparative data. Therefore, it appears likely that PAPRSA's petition for waiver will be granted. For these same reasons, DOE has also determined that it is desirable for public policy reasons to grant PAPRSA immediate relief pending a determination of the petition for waiver. DOE grants PAPRSA's application for interim waiver from testing of its hybrid wine chiller/beverage center basic models.

Therefore, *it is ordered that:*

The application for interim waiver filed by PAPRSA is hereby granted for PAPRSA's hybrid wine chiller/beverage center basic product lines are subject to the following specifications and conditions below. PAPRSA shall be required to test and rate its hybrid wine chiller/beverage center product line according to the alternate test procedure as set forth in section III, ''Alternate test procedure.''

The following basic models are included in PAPRSA's petition:

SR5180JBC
JUB24FLARS0*
JUB24FRARS0*
JUB24FRACX0*

DOE makes decisions on waivers for only those models specifically set out in the petition, not future models that may be manufactured by the petitioner. PAPRSA may submit a subsequent petition for waiver for additional models of electric refrigerators and refrigerator-freezers for which it seeks a waiver from the DOE test procedure. In addition, DOE notes that the grant of a waiver does not release a petitioner from the certification requirements set forth at 10 CFR part 429.

Further, this interim waiver is conditioned upon the presumed validity of statements, representations, and documents provided by the petitioner. DOE may revoke or modify this interim waiver at any time upon a determination that the factual basis underlying the petition for waiver is incorrect, or upon a determination that the results from the alternate test procedure are unrepresentative of the basic models' true energy consumption characteristics.

III. Alternate Test Procedure

PAPRSA submitted an alternate test procedure to account for the energy consumption of its wine chiller/beverage centers. That alternate procedure would test the wine chiller compartment at 55 °F, instead of the prescribed 38 °F. PAPRSA shall also use the K factor (correction factor) value of 0.85 when calculating the energy consumption of one of the models listed above and replace energy consumption calculation of appendix A1 with the following:

Energy consumption is defined by the higher of the two values calculated by the following two formulas (according to 10 CFR part 430, subpart B, Appendix A1):

Energy consumption of the wine compartment:

$$EWine = (ET1 + [(ET2 - ET1) \times (55\ °F - TW1)/(TW2 - TW1)]) * 0.85$$

Energy consumption of the refrigerated beverage compartment:

$$EBeverage\ Compartment = ET1 + [(ET2 - ET1) \times (38\ °F - TBC1)/(TBC2 - TBC1)].$$

IV. Summary and Request for Comments

Through today's notice, DOE grants PAPRSA an interim waiver from the specified portions of the test procedure applicable to PAPRSA's line of hybrid wine chiller/beverage center basic and announces receipt of PAPRSA's petition for waiver from those same portions of the test procedure. DOE is publishing PAPRSA's petition for waiver in its entirety. The petition contains no confidential information. The petition includes a suggested alternate test procedure to determine the energy consumption of PAPRSA's specified hybrid refrigerators. PAPRSA is required to follow this alternate procedure as a condition of its interim waiver, and DOE is considering including this alternate procedure in its subsequent Decision and Order.

DOE solicits comments from interested parties on all aspects of the petition, including the suggested alternate test procedure and calculation methodology. Pursuant to 10 CFR 430.27(d), any person submitting written comments to DOE must also send a copy of such comments to the petitioner. The contact information for the petitioner is: Adam D. Bowser, ARENT FOX LLP, 1717 K St. NW., Washington, DC 20036–5369, (202) 857–6450. All submissions received must include the agency name and case number for this proceeding. Submit electronic comments in WordPerfect, Microsoft Word, Portable Document Format (PDF), or text (American Standard Code for Information Interchange (ASCII)) file format and avoid the use of special characters or any form of encryption. Wherever possible, include the electronic signature of the author. DOE does not accept telefacsimiles (faxes).

According to 10 CFR 1004.11, any person submitting information that he or she believes to be confidential and exempt by law from public disclosure should submit two copies to DOE: one copy of the document including all the information believed to be confidential, and one copy of the document with the information believed to be confidential deleted. DOE will make its own determination about the confidential status of the information and treat it according to its determination.

Issued in Washington, DC, on June 7, 2013.

Kathleen B. Hogan,

Deputy Assistant Secretary for Energy Efficiency, Energy Efficiency and Renewable Energy.

BEFORE THE U.S. DEPARTMENT OF ENERGY

Washington, DC 20585

In the Matter of:

Panasonic Appliances Refrigeration Systems Corporation of America,

Petitioner

Case Number: _____

PETITION FOR WAIVER AND APPLICATION FOR INTERIM WAIVER

Panasonic Appliances Refrigeration Systems Corporation of America (''PAPRSA'') respectfully submits this Petition for Waiver and Application for Interim Waiver (''Petition'') pursuant to 10 C.F.R. § 430.27 on the ground that its hybrid wine chiller/beverage center model (''hybrid model'') listed below contains one or more design characteristics that prevent testing of the basic model according to the test procedures prescribed in 10 C.F.R. § 430, subpart B, appendix A1. As detailed more fully below, the Department of Energy (''DOE'') has previously granted PAPRSA's corporate predecessor, SANYO E&E Corp.,[2] a waiver from DOE's electric refrigerator and refrigerator-freezer test procedures for determining the energy consumption of substantially similar hybrid models in Case No. RF–022 (the ''waiver hybrid models''). PAPRSA has developed a new basic hybrid model, SR5180JBC, that contains the same design characteristics as its waiver hybrid models that make it impossible to certify, rate, and sell this new hybrid model under the existing testing procedures.[3] PAPRSA therefore respectfully requests that it be permitted to employ the alternative testing method for this new basic hybrid model that

[2] Effective April 1, 2013, SANYO E&E Corporation changed its corporate name to Panasonic Appliances Refrigeration Systems Corporation of America. Throughout this Petition, PAPRSA will be used to refer to both SANYO E&E Corporation and Panasonic Appliances Refrigeration Systems Corporation of America, unless otherwise indicated.

[3] At present, PAPRSA intends to market three derivative individual models based on basic hybrid model SR5180JBC that have variances in their cosmetic features: JUB24FLARS0 *, JUB24FRARS0 *, and JUB24FRACX0 *. To the extent this Petition is granted, PAPRSA may develop additional derivative individual models based on basic hybrid model SR5180JBC in the future.

has already been approved by DOE for the waiver hybrid models.

1. Existing Waiver Background and Product Characteristics of PAPRSA's Hybrid Models

On June 2, 2011, PAPRSA submitted a petition for waiver with respect to the test procedures for its waiver hybrid models that consist of a combination of a refrigerated ''beverage'' compartment in the top portion of these single-cabinet units and a wine storage compartment on the bottom of the units, and for which an alternative testing procedure was necessary in order to certify, rate, and sell such models. The waiver hybrid models include the following models: JUB248LB, JUB248RB, JUB248LW, JUB248RW, KBCO24LS, KBCS24LS, KBCO24RS, KBCS24RS, and MBCM24FW.

As PAPRSA previously explained, PAPRSA designed the wine storage compartments of its waiver hybrid models to operate between a minimum temperature of 45 °F and a maximum temperature of 64 °F, with an average temperature of 55 to 57 °F. In fact, heaters are used to ensure that the temperature in the wine storage compartment never drops below 45 °F, as wines chilled below this temperature risk becoming crystallized and, therefore, ruined. Currently, however, DOE's testing procedures contained in 10 C.F.R. § 430, subpart B, appendix A1, mandate that energy consumption be measured when the compartment temperature is set at 38 °F. Based on the design characteristics of its waiver hybrid models noted above, however, PAPRSA needed a waiver with respect to DOE's testing procedures in order to properly ''certify, rate, and sell such models,'' because the existing test procedures contained in 10 C.F.R. § 430, subpart B, appendix A1, do not contemplate a product that is designed to be incapable of achieving a temperature below 45 °F.

On April 2, 2012, DOE published PAPRSA's previous petition for waiver and sought public comment, and DOE subsequently extended the deadline for comments after PAPRSA submitted a request for extension to clarify the scope of its original petition for waiver. *See* **Federal Register**, Vol. 77, No. 96, 29331–29333. No comments were filed opposing the relief requested in PAPRSA's petition for waiver.

On August 9, 2012, DOE granted PAPRSA a waiver from DOE's electric refrigerator and refrigerator-freezer test procedures for determining the energy consumption of the basic models listed in its June 2, 2011 petition for waiver. *See* **Federal Register**, Vol. 77, No. 159, 49443–44. In permitting PAPRSA to test the wine chiller compartment at 55 °F, DOE noted ''that the test procedures for wine chillers adopted by the Association of Home Appliance Manufacturers (AHAM), California Energy Commission (CEC), and Natural Resources Canada all use a standardized compartment temperature of 55 °F for wine chiller compartments, which is consistent with [PAPRSA's] approach.'' *Id.* at 49444.

On September 26, 2012, DOE issued a correction to its August 9, 2012 order that incorporated the K factor (correction factor) value of .85 that PAPRSA should utilize when calculating the energy consumption of its waiver hybrid models. *See* **Federal Register**, Vol. 77, No. 193, 60688–89. Accordingly, DOE ultimately directed PAPRSA to utilize the following test procedure for its waiver hybrid models:

Energy consumption is defined by the higher of the two values calculated by the following two formulas (according to 10 CFR part 430, subpart B, Appendix A1):

Energy consumption of the wine compartment:

EWine = (ET1 + [(ET2–ET1) × (55 °F–TW1)/(TW2–TW1)]) * 0.85

Energy consumption of the refrigerated beverage compartment:

EBeverage Compartment= ET1 + [(ET2–ET1) × (38 °F–TBC1)/(TBC2–TBC1)].

See **Federal Register**, Vol. 77, No. 193 at 60689.

2. Request to Test, Certify and Rate New Basic Model SR5180JBC Under Previously Approved Alternative Testing Procedure

As indicated above, PAPRSA has developed a new basic hybrid model, SR5180JBC, that shares the same design characteristics that led DOE to approve PAPRSA's June 2, 2011 petition for waiver. SR5180JBC is a single cabinet hybrid model that would be classified as a compact refrigerator with automatic defrost without through-the-door ice service, but which has a wine-chiller compartment designed for an average temperature of 55 to 57 °F. Just as PAPRSA's waiver hybrid models, SR5180JBC contains a heater that makes it impossible for the temperature of the wine-chiller compartment to reach a temperature below 45 °F. Thus, testing SR5180JBC at 38 °F is simply not possible and not representative of the energy consumption characteristics of this new basic hybrid model.

Further, SR5180JBC, just as PAPRSA's waiver hybrid models, will have a door-opening usage aligned with household freezers, thus 0.85 should also be the employed K factor (correction factor) for this basic hybrid model. *See* Appendix B1 to Subpart 430, 5.2.1.1, because Subpart 430 does not recognize wine chiller as a category.

In short, there are no material differences between SR5180JBC and PAPRSA's waiver hybrid models as it impacts this Petition. While SR5180JBC has a total adjusted volume of 4.7 cubic feet (instead of the slightly higher volumes of the waiver hybrid models) that would be used in calculating the theoretical maximum allowable annual energy consumption for this basic hybrid model, the design characteristics of SR5180JBC are the same as PAPRSA's waiver hybrid models that led DOE to allow PAPRSA to use the following testing procedure:

Energy consumption is defined by the higher of the two values calculated by the following two formulas (according to 10 CFR part 430, subpart B, Appendix A1):

Energy consumption of the wine compartment:

EWine = (ET1 + [(ET2–ET1) × (55 °F–TW1)/(TW2–TW1)]) * 0.85

Energy consumption of the refrigerated beverage compartment:

EBeverage Compartment= ET1 + [(ET2–ET1) × (38 °F–TBC1)/(TBC2–TBC1)].

Accordingly, PAPRSA respectfully requests that it be permitted to use this approved alternative testing method to test, certify and rate new basic hybrid model SR5180JBC in the same manner as its waiver hybrid models subject to the existing waiver.

3. Manufacturers of Other Basic Models Marketed in the United States Known to Incorporate Similar Design Characteristics

After reviewing publicly available product manuals of comparable hybrid models, PAPRSA was unable to locate a basic model marketed in the United States that incorporates similar design characteristics and that also would be considered a ''covered product'' under Section 430.62 of DOE's rules.[4]

4. Grounds for Interim Waiver

Pursuant to 10 CFR part 430.27(b)(2), applicants for an interim waiver should address the likely success of their petition and what economic hardships and/or competitive disadvantages are likely to arise absent the grant of an interim waiver.

As detailed above, it is highly likely that DOE will grant this Petition, as PAPRSA is simply seeking to test a new basic hybrid model under the alternative testing procedure already approved by DOE for PAPRSA's other hybrid models subject to the existing waiver. SR5180JBC contains no materially different design characteristics that should warrant a different result.

Further, as DOE has previously stated, ''[f]ully recognizing that product development occurs faster than the test procedure rulemaking process, the Department's rules permit manufacturers of models not contemplated by the test procedures . . . to petition for a test procedure waiver in order to certify, rate, and sell such models.'' GC Enforcement Guidance on the Application of Waivers and on the Waiver Process at 2 (rel. Dec. 23, 2010);[5] *see also* DOE FAQ Guidance Regarding Coverage of Wine Chillers, Etc. in the R/F Standard/

[4] PAPRSA cannot guarantee that its search disclosed every possible competing model, as PAPRSA ordinarily does not search for and retain this information in the normal course of business, but to the best of PAPRSA's knowledge, certain GE hybrid models appear to be the closest substitutes to SANYO E&E's hybrid models in terms of both functionality and design characteristics. However, GE represents in its product manuals that its hybrid models, specifically, ZDBC240, ZDBT240, ZDBR240, and ZDBI240, do not achieve temperatures below 40 °F and thus would not be considered a covered product under DOE regulations. PAPRSA is uncertain if GE means that the average temperature of the entire cabinet does not drop below 40 °F, which is the case with all PAPRSA's hybrid models, or whether GE is representing that no portion of its single-cabinet models can achieve temperatures below 40 °F. Based on this uncertainty, PAPRSA excluded GE from this section. PAPRSA's research did not reveal any other basic models that, after review of the design characteristics, were comparable to PAPRSA's hybrid models.

[5] Available at *http://www.gc.energy.gov/documents/LargeCapacityRCW_guidance_122210.pdf.*

Test Procedure at 2 (rel. Feb. 10, 2011) (''DOE recognizes the potential disparity in treatment among these hybrid products. As DOE indicated . . . , the Department plans to engage in a future rulemaking to more comprehensively address these types of products.'').

As noted in Section 3 above, certain manufacturers design comparable hybrid models so that the beverage center compartment does not reach below 40 °F, and thus are not covered products under DOE's regulations. Unless PAPRSA is granted an interim waiver, it will be at a competitive disadvantage by being unable to introduce new basic hybrid models to compete with manufacturers that design their hybrid models in a manner that falls outside of DOE's jurisdiction.

Thus, given that this Petition is likely to be granted and PAPRSA will face economic hardship unless an interim waiver is granted, permitting PAPRSA to immediately certify new basic hybrid model SR5180JBC under the alternative testing method already approved by DOE is in the public interest.

Respectfully submitted,

/s/

Alan G. Fishel
Adam D. Bowser
Arent Fox LLP
1717 K St. NW.
Washington, DC 20036–5369
(202) 857–6450
fishel.alan@arentfox.com
bowser.adam@arentfox.com

Counsel for Panasonic Appliances Refrigeration Systems Corporation of America

April 29, 2013

[FR Doc. 2013–14163 Filed 6–13–13; 8:45 am]

BILLING CODE 6450–01–P

DEPARTMENT OF ENERGY

Office of Energy Efficiency and Renewable Energy

[Case No. RF–027]

Decision and Order Granting a Waiver to Samsung From the Department of Energy Residential Refrigerator and Refrigerator-Freezer Test Procedures

AGENCY: Office of Energy Efficiency and Renewable Energy, Department of Energy.

ACTION: Decision and Order.

SUMMARY: The U.S. Department of Energy (DOE) gives notice of its decision and order in Case No. RF–027 that grants to Samsung Electronics America, Inc. (Samsung) a waiver from the DOE electric refrigerator and refrigerator-freezer test procedures for specific basic models set forth in its petition for waiver. In its petition, Samsung provides an alternate test procedure that is identical to the test procedure DOE published in a final rule dated January 25, 2012 that manufacturers will be required to use starting in 2014. Under today's decision and order, Samsung shall be required to test and rate these refrigerator-freezers using an alternate test procedure as adopted in that January 2012 final rule, which accounts for multiple defrost cycles when measuring energy consumption.

DATES: This Decision and Order is effective June 14, 2013.

FOR FURTHER INFORMATION CONTACT:

Mr. Bryan Berringer, U.S. Department of Energy, Building Technologies Program, Mailstop EE–2J, 1000 Independence Avenue SW., Washington, DC 20585–0121. Telephone: (202) 586–0371, Email: *Bryan.Berringer@ee.doe.gov*.

Mr. Michael Kido, U.S. Department of Energy, Office of the General Counsel, Mail Stop GC–71, Forrestal Building, 1000 Independence Avenue SW., Washington, DC 20585–0103. Telephone: (202) 586–8145. Email: *Michael.Kido@hq.doe.gov*.

SUPPLEMENTARY INFORMATION: In accordance with Title 10 of the Code of Federal Regulations (10 CFR 430.27(l)), DOE gives notice of the issuance of its decision and order as set forth below. The decision and order grants Samsung a waiver from the applicable residential refrigerator and refrigerator-freezer test procedures in 10 CFR part 430, subpart B, appendix A1 for certain basic models of refrigerator-freezers with multiple defrost cycles, provided that Samsung tests and rates such products using the alternate test procedure described in this notice. Today's decision prohibits Samsung from making representations concerning the energy efficiency of these products unless the product has been tested in a manner consistent with the provisions and restrictions in the alternate test procedure set forth in the decision and order below, and the representations fairly disclose the test results. Distributors, retailers, and private labelers are held to the same standard when making representations regarding the energy efficiency of these products. 42 U.S.C. 6293(c).

Issued in Washington, DC, on June 7, 2013.

Kathleen B. Hogan,

Deputy Assistant Secretary for Energy Efficiency, Energy Efficiency and Renewable Energy.

Decision and Order

In the Matter of: Samsung Electronics America, Inc. (Case No. RF–027)

I. Background and Authority

Title III, Part B of the Energy Policy and Conservation Act of 1975 (EPCA), Public Law 94–163 (42 U.S.C. 6291–6309, as codified) established the Energy Conservation Program for Consumer Products Other Than Automobiles, a program covering most major household appliances, which includes the residential electric refrigerators and refrigerator-freezers that are the focus of this notice.[1] Part B includes definitions, test procedures, labeling provisions, energy conservation standards, and the authority to require information and reports from manufacturers. Further, Part B authorizes the Secretary of Energy to prescribe test procedures that are reasonably designed to produce results which measure energy efficiency, energy use, or estimated operating costs, and that are not unduly burdensome to conduct. (42 U.S.C. 6293(b)(3)) The test procedure for residential electric refrigerators and refrigerator-freezers is set forth in 10 CFR part 430, subpart B, appendix A1.

DOE's regulations for covered products contain provisions allowing a person to seek a waiver from the test procedure requirements for a particular basic model for covered consumer products when (1) the petitioner's basic model for which the petition for waiver was submitted contains one or more design characteristics that prevent testing according to the prescribed test procedure, or (2) when prescribed test procedures may evaluate the basic model in a manner so unrepresentative of its true energy consumption characteristics as to provide materially inaccurate comparative data. 10 CFR 430.27(a)(1). Petitioners must include in their petition any alternate test procedures known to the petitioner to evaluate the basic model in a manner representative of its energy consumption characteristics.

The Assistant Secretary for Energy Efficiency and Renewable Energy (the Assistant Secretary) may grant a waiver subject to conditions, including adherence to alternate test procedures. 10 CFR 430.27(l). Waivers remain in effect pursuant to the provisions of 10 CFR 430.27(m).

Any interested person who has submitted a petition for waiver may also file an application for interim waiver of the applicable test procedure requirements. 10 CFR 430.27(a)(2). The Assistant Secretary will grant an interim waiver request if it is determined that the applicant will experience economic hardship if the interim waiver is denied, if it appears likely that the petition for waiver will be granted, and/or the

[1] For editorial reasons, upon codification in the U.S. Code, Part B was re-designated Part A.

Assistant Secretary determines that it would be desirable for public policy reasons to grant immediate relief pending a determination on the petition for waiver. 10 CFR 430.27(g).

II. Samsung's Petition for Waiver: Assertions and Determinations

On February 5, 2013, Samsung submitted a petition for waiver from the test procedure applicable to residential electric refrigerators and refrigerator-freezers set forth in 10 CFR part 430, subpart B, appendix A1. Samsung is designing new refrigerator-freezers that incorporate multiple defrost cycles. In its petition, Samsung seeks a waiver from the existing DOE test procedure applicable to refrigerators and refrigerator-freezers under 10 CFR part 430 because the existing test procedure does not account for multiple defrost cycles. Therefore, Samsung has asked to use an alternate test procedure that is the same as the test procedure provisions for products with long time or variable defrost DOE published in a final rule (77 FR 3559 (Jan. 25, 2012)). On January 27, July 19, and December 14, 2011, Samsung had submitted similar petitions for waiver and requests for interim waiver for other basic models of refrigerator-freezers that incorporate multiple defrost cycles. DOE subsequently granted a waiver for the products specified in these petitions. 77 FR 1474 (Jan. 10, 2012) and 77 FR 75428 (Dec. 20, 2012).

Samsung's petition included an alternate test procedure to account for the energy consumption of its refrigerator-freezer models with multiple defrost cycles. The alternate test procedure specified by Samsung is the same as the test procedure that DOE finalized in January 2012. See 77 FR 3359. Among other things, the notice to that final rule addressed comments received on the Samsung petitions that were the subject of the previous waiver, as well as the interim final rule that had previously been issued. See 75 FR 78810 (Dec. 16, 2010). The alternate test procedure that Samsung has requested permission to use as part of its waiver petition is, as with its prior waiver petitions noted above, identical to the test procedure provisions for products with long time or variable defrost DOE adopted in the final test procedure rule that manufacturers will be required to use starting in 2014.

Because the currently applicable test procedure cannot be used to test the basic models at issue or would otherwise lead to materially inaccurate results, DOE previously granted a waiver to Samsung for other basic models incorporating multiple defrost technology. See 77 FR 1474 and 77 FR 75428. DOE has determined that it is desirable to have similar basic models, such as those addressed by the Samsung petition addressed in this notice, tested in a consistent manner and is adopting the same approach laid out in its prior decision by permitting Samsung to use the alternate test procedure specified in this Decision and Order.

III. Consultations With Other Agencies

DOE consulted with the Federal Trade Commission (FTC) staff concerning the Samsung petition for waiver. The FTC staff did not have any objections to granting a waiver to Samsung.

IV. Conclusion

After careful consideration of all the material that was submitted by Samsung and consultation with the FTC staff, it is ordered that:

(1) The petitions for waiver submitted by the Samsung Electronics America, Inc. (Case No. RF–027) are hereby granted as set forth in the paragraphsin this section.

(2) Samsung shall be required to test and rate the following Samsung model according to the alternate test procedure set forth in paragraph (3) of this section.

* * * * *

(3) Samsung shall be required to test the products listed in paragraph (2) of this section according to appendix A1 to subpart B of 10 CFR part 430 except that the test cycle shall be identical to the test procedure provisions for products with long-time or variable defrost located in section 4.2.1 of appendix A to subpart B of 10 CFR part 430, as adopted in DOE's final rule dated January 25, 2012 (77 FR 3559).

(4) Representations. Samsung may make representations about the energy use of its refrigerator-freezer products for compliance, marketing, or other purposes only to the extent that such products have been tested in accordance with the provisions outlined above and such representations fairly disclose the results of such testing.

(5) This waiver shall remain in effect consistent with the provisions of 10 CFR 430.27(m).

(6) This waiver is issued on the condition that the statements, representations, and documentary materials provided by the petitioner are valid. DOE may revoke or modify this waiver at any time if it determines the factual basis underlying the petition for waiver is incorrect, or the results from the alternate test procedure are unrepresentative of the basic models' true energy consumption characteristics.

(7) This waiver applies only to those basic models set out in Samsung's February 5, 2013 petition for waiver. Grant of this waiver does not release a petitioner from the certification requirements set forth at 10 CFR part 429.

Issued in Washington, DC, on June 7, 2013.

Kathleen B. Hogan,

Deputy Assistant Secretary for Energy Efficiency, Energy Efficiency and Renewable Energy.

[FR Doc. 2013–14169 Filed 6–13–13; 8:45 am]

BILLING CODE 6450–01–P

DEPARTMENT OF ENERGY

Office of Energy Efficiency and Renewable Energy

[Case No. RF–026]

Decision and Order Granting a Waiver to Samsung From the Department of Energy Residential Refrigerator and Refrigerator-Freezer Test Procedures

AGENCY: Office of Energy Efficiency and Renewable Energy, Department of Energy.

ACTION: Decision and Order.

SUMMARY: The U.S. Department of Energy (DOE) gives notice of the decision and order (Case No. RF–026) that grants to Samsung Electronics America, Inc. (Samsung) a waiver from the DOE electric refrigerator and refrigerator-freezer test procedures for the basic models set forth in its petition for waiver. In its petition, Samsung provides an alternate test procedure to address the difficulties in testing dual compressor systems using the currently applicable DOE test procedure. Under today's decision and order, Samsung shall be required to test and rate these refrigerator-freezers using an alternate test procedure that takes dual compressors into account when measuring energy consumption.

DATES: This Decision and Order is effective June 14, 2013.

FOR FURTHER INFORMATION CONTACT:

Mr. Bryan Berringer, U.S. Department of Energy, Building Technologies Program, Mailstop EE–2J, 1000 Independence Avenue SW., Washington, DC 20585–0121. Telephone: (202) 586–0371, Email: *Bryan.Berringer@ee.doe.gov*.

Mr. Michael Kido, U.S. Department of Energy, Office of the General Counsel, Mail Stop GC–71, Forrestal Building, 1000 Independence Avenue SW., Washington, DC 20585–0103. Telephone: (202) 586–8145. Email: *Michael.Kido@hq.doe.gov*.

SUPPLEMENTARY INFORMATION: In accordance with Title 10 of the Code of

Federal Regulations (10 CFR 430.27(l)), DOE gives notice of the issuance of its decision and order as set forth below. The decision and order grants Samsung a waiver from the applicable residential refrigerator and refrigerator-freezer test procedures in 10 CFR part 430, subpart B, appendix A1 for certain basic models of refrigerator-freezers with dual compressors, provided that Samsung tests and rates such products using the alternate test procedure described in this notice. Today's decision prohibits Samsung from making representations concerning the energy efficiency of these products unless the product has been tested consistent with the provisions and restrictions in the alternate test procedure set forth in the decision and order below, and the representations fairly disclose the test results.

Distributors, retailers, and private labelers are held to the same standard when making representations regarding the energy efficiency of these products. 42 U.S.C. 6293(c).

Issued in Washington, DC, on June 7, 2013.

Kathleen B. Hogan,

Deputy Assistant Secretary for Energy Efficiency, Energy Efficiency and Renewable Energy.

Decision and Order

In the Matter of: Samsung Electronics America, Inc. (Case No. RF–026)

I. Background and Authority

Title III, Part B of the Energy Policy and Conservation Act of 1975 (EPCA), Pub. L. 94–163 (42 U.S.C. 6291–6309, as codified) established the Energy Conservation Program for Consumer Products Other Than Automobiles, a program covering most major household appliances, which includes the residential electric refrigerators and refrigerator-freezers that are the focus of this notice.[1] Part B includes definitions, test procedures, labeling provisions, energy conservation standards, and the authority to require information and reports from manufacturers. Further, it authorizes the Secretary of Energy to prescribe test procedures that are reasonably designed to produce results which measure energy efficiency, energy use, or estimated operating costs, and that are not unduly burdensome to conduct. (42 U.S.C. 6293(b)(3)) The test procedure for residential electric refrigerators and refrigerator-freezers is set forth in 10 CFR part 430, subpart B, appendix A1.

DOE's regulations for covered products contain provisions allowing a person to seek a waiver from the test procedure requirements for a particular basic model for covered consumer products when (1) the petitioner's basic model for which the petition for waiver was submitted contains one or more design characteristics that prevent testing according to the prescribed test procedure, or (2) when prescribed test procedures may evaluate the basic model in a manner so unrepresentative of its true energy consumption characteristics as to provide materially inaccurate comparative data. 10 CFR 430.27(a)(1). Petitioners must include in their petition any alternate test procedures known to the petitioner to evaluate the basic model in a manner representative of its energy consumption characteristics.

The Assistant Secretary for Energy Efficiency and Renewable Energy (the Assistant Secretary) may grant a waiver subject to conditions, including adherence to alternate test procedures. 10 CFR 430.27(l). Waivers remain in effect pursuant to the provisions of 10 CFR 430.27(m).

Any interested person who has submitted a petition for waiver may also file an application for interim waiver of the applicable test procedure requirements. 10 CFR 430.27(a)(2). The Assistant Secretary will grant an interim waiver request if it is determined that the applicant will experience economic hardship if the interim waiver is denied, if it appears likely that the petition for waiver will be granted, and/or the Assistant Secretary determines that it would be desirable for public policy reasons to grant immediate relief pending a determination on the petition for waiver. 10 CFR 430.27(g).

II. Samsung's Petition for Waiver: Assertions and Determinations

On January 7, 2013, Samsung submitted a petition for waiver from the test procedure applicable to residential electric refrigerators and refrigerator-freezers set forth in 10 CFR part 430, subpart B, appendix A1 because it was designing new refrigerator-freezers that incorporate a dual compressor design. Samsung sought a waiver from the existing DOE test procedure applicable to refrigerators and refrigerator-freezers under 10 CFR part 430 because the existing test procedure does not account for the company's dual compressor products. In its petition, Samsung set forth an alternate test procedure and noted in support of its petition that DOE has already granted Sub-Zero a similar waiver pertaining to the use of dual compressor-equipped refrigerators. See 76 FR 71335 (November 17, 2011) (interim waiver) and 77 FR 5784 (February 6, 2012) (Decision and Order). DOE has also granted a similar waiver to LG. See 77 FR 44603 (July 30, 2012) (interim waiver) and 78 FR 18327 (March 26, 2013) (Decision and Order). While Samsung has acknowledged that its products are different from the ones addressed by the Sub-Zero waiver in that they feature a different number of evaporators and defrost heaters, Samsung asserts that the procedure outlined in the Sub-Zero waiver will provide a representative measurement of the energy use of its products. In addition, Samsung requests that it be permitted to use the alternate test procedure that DOE has already permitted Sub-Zero and LG to use in response to similar waiver requests pertaining to the testing of refrigerator-freezers that use shared dual compressors, with minor modification suggested below:

Before: 5.2.1.4 Dual Compressor Systems with dual Automatic Defrost

With Minor Change: 5.2.1.4 Dual Compressor Systems with Automatic Defrost (i=1 is mono, i=2 is dual).

DOE has determined that it is desirable to have similar basic models, such as those addressed by this most recent Samsung petition, tested in a consistent manner and is adopting the same approach laid out in its prior decision by permitting Samsung to use the alternate test procedure specified in this Decision and Order.

III. Consultations With Other Agencies

DOE consulted with the Federal Trade Commission (FTC) staff concerning the Samsung petition for waiver. The FTC staff did not have any objections to granting a waiver to Samsung.

IV. Conclusion

After careful consideration of all the material that was submitted by Samsung and DOE's consultation with the FTC staff, it is ordered that:

(1) The petitions for waiver submitted by the Samsung Electronics America, Inc. (Case No. RF–026) are hereby granted as set forth in the paragraphs in this section.

(2) Samsung shall be required to test and rate the following Samsung model according to the alternate test procedure set forth in paragraph (3) of this section. RF32FM*****

(3) Samsung shall be required to test the product listed in paragraph (2) of this section according to the test procedures for electric refrigerator-freezers prescribed by DOE at 10 CFR part 430, appendix A1, except that, for the Samsung products listed in paragraph (2) only, replace section

[1] For editorial reasons, upon codification in the U.S. Code, Part B was re-designated Part A.

5.2.1.4 of appendix A1, with the following:

5.2.1.4 Dual Compressor Systems with Automatic Defrost (i=1 is mono, i=2 is dual). The two-part test method in section 4.2.1 must be used, and the energy consumption in kilowatt-hours per day shall be calculated equivalent to:

$$ET = (1440 \text{ x } EP1/T1) + \sum_{i=1}^{D} [(EP2_i - (EP1 \text{ x } T2_i/T1)) \text{ x } (12/CT_i)]$$

Where:

1440 = number of minutes in a day

ET is the test cycle energy (kWh/day);

i is a variable that can equal to 1, 2 or more that identifies the distinct defrost cycle types applicable for the refrigerator or refrigerator-freezer;

D is the total number of distinct defrost cycle types;

EP1 is the dual compressor energy expended during the first part of the test (it is calculated for a whole number of freezer compressor cycles at least 24 hours in duration and may be the summation of several running periods that do not include any precool, defrost, or recovery periods);

T1 is the length of time for EP1 (minutes);

EP2i is the total energy consumed during the second (defrost) part of the test being conducted for compartment i. (kWh);

T2i is the length of time (minutes) for the second (defrost) part of the test being conducted for compartment i.

CTi is the freezer compressor run time between instances of defrost cycle type i. CTi for compartment i with long time automatic defrost system is calculated as per 10 CFR part 430, subpart B, appendix A1 clause 5.2.1.2. CTi for compartment i with variable defrost system is calculated as per 10 CFR part 430 subpart B appendix A1 clause 5.2.1.3. (hours rounded to the nearest tenth of an hour).

Stabilization

The test shall start after a minimum 24 hours stabilization run for each temperature control setting.

Steady State for EP1

The temperature average for the first and last compressor cycle of the test period must be within 1.0 [degrees] F (0.6 [degrees] C) of the test period temperature average for each compartment. Make this determination for the fresh food compartment for the fresh food compressor cycles closest to the start and end of the test period. If multiple segments are used for test period 1, each segment must comply with above requirement.

Steady State for EP2i

The second (defrost) part of the test must be preceded and followed by regular compressor cycles. The temperature average for the first and last compressor cycle of the test period must be within 1.0 [degrees] F (0.6 [degrees] C) of the EP1 test period temperature average for each compartment.

Test Period for EP2i, T2i

EP2i includes precool, defrost, and recovery time for compartment i, as well as sufficient dual compressor steady state run cycles to allow T2i to be at least 24 hours. The test period shall start at the end of a regular freezer compressor on-cycle after the previous defrost occurrence (refrigerator or freezer). The test period also includes the target defrost and following regular freezer compressor cycles, ending at the end of a regular freezer compressor on-cycle before the next defrost occurrence (refrigerator or freezer). If the previous condition does not meet 24 hours time, additional EP1 steady state segment data could be included. Steady state run cycle data can be utilized in EP1 and EP2i.

Test Measurement Frequency Measurements shall be taken at regular interval not exceeding 1 minute.

[End of 5.2.1.4]

(4) Representations. Samsung may make representations about the energy use of its refrigerator-freezer products for compliance, marketing, or other purposes only to the extent that such products have been tested in accordance with the provisions outlined above and such representations fairly disclose the results of such testing.

(5) This waiver shall remain in effect consistent with the provisions of 10 CFR 430.27(m).

(6) This waiver is issued on the condition that the statements, representations, and documentary materials provided by the petitioner are valid. DOE may revoke or modify this waiver at any time if it determines the factual basis underlying the petition for waiver is incorrect, or the results from the alternate test procedure are unrepresentative of the basic models' true energy consumption characteristics.

(7) This waiver applies only to those basic models set out in Samsung's January 7, 2013 petition for waiver. Grant of this waiver does not release a petitioner from the certification requirements set forth at 10 CFR part 429.

Issued in Washington, DC, on June 7, 2013.

Kathleen B. Hogan,

Deputy Assistant Secretary for Energy Efficiency, Energy Efficiency and Renewable Energy.

[FR Doc. 2013–14166 Filed 6–13–13; 8:45 am]

BILLING CODE 6450–01–P

DEPARTMENT OF ENERGY

Office of Energy Efficiency and Renewable Energy

[Case No. RF–025]

Decision and Order Granting a Waiver to Samsung From the Department of Energy Residential Refrigerator and Refrigerator-Freezer Test Procedures

AGENCY: Office of Energy Efficiency and Renewable Energy, Department of Energy.

ACTION: Decision and Order.

SUMMARY: The U.S. Department of Energy (DOE) gives notice of its decision and order in Case No. RF–025 that grants to Samsung Electronics America, Inc. (Samsung) a waiver from the DOE electric refrigerator and refrigerator-freezer test procedures for specific basic models set forth in its petition for waiver. In its petition, Samsung provides an alternate test procedure that is identical to the test procedure DOE published in a final rule dated January 25, 2012 that manufacturers will be required to use starting in 2014. Under today's decision and order, Samsung shall be required to test and rate these refrigerator-freezers using an alternate test procedure as adopted in that January 2012 final rule, which accounts for multiple defrost cycles when measuring energy consumption.

DATES: This Decision and Order is effective June 14, 2013.

FOR FURTHER INFORMATION CONTACT:

Mr. Bryan Berringer, U.S. Department of Energy, Building Technologies Program, Mailstop EE–2J, 1000 Independence Avenue SW., Washington, DC 20585–0121. Telephone: (202) 586–0371, Email: *Bryan.Berringer@ee.doe.gov*.

Mr. Michael Kido, U.S. Department of Energy, Office of the General Counsel,

Mail Stop GC–71, Forrestal Building, 1000 Independence Avenue SW., Washington, DC 20585–0103. Telephone: (202) 586–8145. Email: *Michael.Kido@hq.doe.gov*.

SUPPLEMENTARY INFORMATION: In accordance with Title 10 of the Code of Federal Regulations (10 CFR 430.27(l)), DOE gives notice of the issuance of its decision and order as set forth below. The decision and order grants Samsung a waiver from the applicable residential refrigerator and refrigerator-freezer test procedures in 10 CFR part 430, subpart B, appendix A1 for certain basic models of refrigerator-freezers with multiple defrost cycles, provided that Samsung tests and rates such products using the alternate test procedure described in this notice. Today's decision prohibits Samsung from making representations concerning the energy efficiency of these products unless the product has been tested in a manner consistent with the provisions and restrictions in the alternate test procedure set forth in the decision and order below, and the representations fairly disclose the test results.

Distributors, retailers, and private labelers are held to the same standard when making representations regarding the energy efficiency of these products. 42 U.S.C. 6293(c).

Issued in Washington, DC, on June 6, 2013.

Kathleen B. Hogan,

Deputy Assistant Secretary for Energy Efficiency, Energy Efficiency and Renewable Energy.

Decision and Order

In the Matter of: Samsung Electronics America, Inc. (Case No. RF–025)

I. *Background and Authority*

Title III, Part B of the Energy Policy and Conservation Act of 1975 (EPCA), Pub. L. 94–163 (42 U.S.C. 6291–6309, as codified) established the Energy Conservation Program for Consumer Products Other Than Automobiles, a program covering most major household appliances, which includes the residential electric refrigerators and refrigerator-freezers that are the focus of this notice.[1] Part B includes definitions, test procedures, labeling provisions, energy conservation standards, and the authority to require information and reports from manufacturers. Further, Part B authorizes the Secretary of Energy to prescribe test procedures that are reasonably designed to produce results which measure energy efficiency, energy use, or estimated operating costs, and that are not unduly burdensome to conduct. (42 U.S.C. 6293(b)(3)) The test procedure for residential electric refrigerators and refrigerator-freezers is set forth in 10 CFR part 430, subpart B, appendix A1.

DOE's regulations for covered products contain provisions allowing a person to seek a waiver from the test procedure requirements for a particular basic model for covered consumer products when (1) the petitioner's basic model for which the petition for waiver was submitted contains one or more design characteristics that prevent testing according to the prescribed test procedure, or (2) when prescribed test procedures may evaluate the basic model in a manner so unrepresentative of its true energy consumption characteristics as to provide materially inaccurate comparative data. 10 CFR 430.27(a)(1). Petitioners must include in their petition any alternate test procedures known to the petitioner to evaluate the basic model in a manner representative of its energy consumption characteristics.

The Assistant Secretary for Energy Efficiency and Renewable Energy (the Assistant Secretary) may grant a waiver subject to conditions, including adherence to alternate test procedures. 10 CFR 430.27(l). Waivers remain in effect pursuant to the provisions of 10 CFR 430.27(m).

Any interested person who has submitted a petition for waiver may also file an application for interim waiver of the applicable test procedure requirements. 10 CFR 430.27(a)(2). The Assistant Secretary will grant an interim waiver request if it is determined that the applicant will experience economic hardship if the interim waiver is denied, if it appears likely that the petition for waiver will be granted, and/or the Assistant Secretary determines that it would be desirable for public policy reasons to grant immediate relief pending a determination on the petition for waiver. 10 CFR 430.27(g).

II. *Samsung's Petition for Waiver: Assertions and Determinations*

On December 11, 2012, Samsung submitted a petition for waiver from the test procedure applicable to residential electric refrigerators and refrigerator-freezers set forth in 10 CFR part 430, subpart B, appendix A1. Samsung is designing new refrigerator-freezers that incorporate multiple defrost cycles. In its petition, Samsung seeks a waiver from the existing DOE test procedure applicable to refrigerators and refrigerator-freezers under 10 CFR part 430 because the existing test procedure does not account for multiple defrost cycles. Therefore, Samsung has asked to use an alternate test procedure that is the same as the test procedure provisions for products with long time or variable defrost DOE published in a final rule (77 FR 3559 (Jan. 25, 2012)). On January 27, July 19, and December 14, 2011, Samsung had submitted similar petitions for waiver and requests for interim waiver for other basic models of refrigerator-freezers that incorporate multiple defrost cycles. DOE subsequently granted a waiver for the products specified in these petitions. 77 FR 1474 (Jan. 10, 2012) and 77 FR 75428 (Dec. 20, 2012).

Samsung's petition included an alternate test procedure to account for the energy consumption of its refrigerator-freezer models with multiple defrost cycles. The alternate test procedure specified by Samsung is the same as the test procedure that DOE finalized in January 2012. See 77 FR 3359. Among other things, the notice to that final rule addressed comments received on the Samsung petitions that were the subject of the previous waiver, as well as the interim final rule that had previously been issued. See 75 FR 78810 (Dec. 16, 2010). The alternate test procedure that Samsung has requested permission to use as part of its waiver petition is, as with its prior waiver petitions noted above, identical to the test procedure provisions for products with long time or variable defrost DOE adopted in the final test procedure rule that manufacturers will be required to use starting in 2014.

Because the currently applicable test procedure cannot be used to test the basic models at issue or would otherwise lead to materially inaccurate results, DOE previously granted a waiver to Samsung for other basic models incorporating multiple defrost technology. See 77 FR 1474 and 77 FR 75428. DOE has determined that it is desirable to have similar basic models, such as those addressed by the Samsung petition addressed in this notice, tested in a consistent manner and is adopting the same approach laid out in its prior decision by permitting Samsung to use the alternate test procedure specified in this Decision and Order.

III. *Consultations with Other Agencies*

DOE consulted with the Federal Trade Commission (FTC) staff concerning the Samsung petition for waiver. The FTC staff did not have any objections to granting a waiver to Samsung.

IV. *Conclusion*

After careful consideration of all the material that was submitted by Samsung

[1] For editorial reasons, upon codification in the U.S. Code, Part B was re-designated Part A.

and consultation with the FTC staff, it is ordered that:

(1) The petitions for waiver submitted by the Samsung Electronics America, Inc. (Case No. RF–025) are hereby granted as set forth in the paragraphs in this section.

(2) Samsung shall be required to test and rate the following Samsung models according to the alternate test procedure set forth in paragraph (3) of this section.

RF31FM*SB**

RF31FM*DB**

RF24FS*DB**

(3) Samsung shall be required to test the products listed in paragraph (2) of this section according to appendix A1 to subpart B of 10 CFR part 430 except that the test cycle shall be identical to the test procedure provisions for products with long-time or variable defrost located in section 4.2.1 of appendix A to subpart B of 10 CFR part 430, as adopted in DOE's final rule dated January 25, 2012 (77 FR 3559).

(4) Representations. Samsung may make representations about the energy use of its refrigerator-freezer products for compliance, marketing, or other purposes only to the extent that such products have been tested in accordance with the provisions outlined above and such representations fairly disclose the results of such testing.

(5) This waiver shall remain in effect consistent with the provisions of 10 CFR 430.27(m).

(6) This waiver is issued on the condition that the statements, representations, and documentary materials provided by the petitioner are valid. DOE may revoke or modify this waiver at any time if it determines the factual basis underlying the petition for waiver is incorrect, or the results from the alternate test procedure are unrepresentative of the basic models' true energy consumption characteristics.

(7) This waiver applies only to those basic models set out in Samsung's December 11, 2012 petition for waiver. Grant of this waiver does not release a petitioner from the certification requirements set forth at 10 CFR part 429.

Issued in Washington, DC, on June 6, 2013.

Kathleen B. Hogan,

Deputy Assistant Secretary for Energy Efficiency, Energy Efficiency and Renewable Energy.

[FR Doc. 2013–14164 Filed 6–13–13; 8:45 am]

BILLING CODE 6450–01–P

ENVIRONMENTAL PROTECTION AGENCY

[EPA–HQ–OPPT–2013–0275; FRL–9529–9]

Information Collection Request Submitted to OMB for Review and Approval; Comment Request; ICR Addendum for the Second List of Chemicals; Tier 1 Screening of Certain Chemicals Under the Endocrine Disruptor Screening Program

AGENCY: Environmental Protection Agency (EPA).

ACTION: Notice.

SUMMARY: EPA has submitted the following Information Collection Request (ICR) to the Office of Management and Budget (OMB) for review and approval in accordance with the Paperwork Reduction Act (44 U.S.C. 3501 *et seq.*): ''ICR Addendum for the Second List of Chemicals; Tier 1 Screening of Certain Chemicals Under the Endocrine Disruptor Screening Program (EDSP)'' (EPA ICR No. 2488.01, OMB Control No. 2070—[new]). This is a new ICR that will amend an ICR that is currently approved under OMB Control No. 2070–0176 (EPA ICR No. 2249) and that covers the first list of chemicals. The ICR, which is abstracted below, describes the nature of the information collection activity and its expected burden and costs.

DATES: Submit comments on or before July 15, 2013.

ADDRESSES: Submit your comments, referencing Docket ID Number EPA–HQ–OPPT–2013–0275, to (1) EPA online using *http://www.regulations.gov* (our preferred method) or by mail to: Pollution Prevention and Toxics Docket, Environmental Protection Agency Docket Center (28221T), 1200 Pennsylvania Ave. NW., Washington, DC 20460, and (2) OMB via email to *oira_submission@omb.eop.gov* (address your comments to the OMB Desk Officer for EPA).

EPA's policy is that all comments received will be included in the public docket without change including any personal information provided, unless the comment includes profanity, threats, information claimed to be Confidential Business Information (CBI) or other information whose disclosure is restricted by statute.

FOR FURTHER INFORMATION CONTACT: Pat West, (7203M), Office of Science Coordination and Policy (OSCP), Environmental Protection Agency, 1200 Pennsylvania Ave. NW., Washington, DC 20460–0001; telephone number: (202) 564–1656; fax number: (202) 564–8482; email address: *west.pat@epa.gov.*

SUPPLEMENTARY INFORMATION: Supporting documents which explain in detail the information that the EPA will be collecting are available in the public docket for this ICR. The docket can be viewed online at *www.regulations.gov* or in person at the EPA Docket Center, EPA West, Room 3334, 1301 Constitution Ave. NW., Washington, DC. The telephone number for the Docket Center is 202–566–1744. For additional information about EPA's public docket, visit *http://www.epa.gov/dockets.*

EPA received several comments in response to its solicitation of comments pursuant to 5 CFR 1320.8(d) in the **Federal Register** issue of November 17, 2010 (75 FR 70569). The ICR submitted to OMB includes EPA's responses, and reflects revisions made in response to those comments. Please note that when comments were sought in 2010, the draft ICR was identified under EPA ICR No. 2249.02 and OMB Control No. 2070–0176, and comments were directed to Docket ID No. EPA–HQ–OPPT–2007–1081, which had been established for the initial ICR related to List 1 chemicals. Given the resulting confusion in finding documents in that docket, EPA has established a new docket, which is linked to the old docket.

ICR Status: This is an addendum to an existing ICR that is currently approved under OMB Control No. 2070–0176 (EPA ICR No. 2249), covering the first list of chemicals screened under the EDSP. Under OMB regulations, the Agency may continue to conduct or sponsor an approved collection of information while this submission is pending at OMB. In this case, this applies to the activities associated with the chemicals on List 1, but not those associated with the chemicals on List 2. Under the PRA, an agency may not conduct or sponsor, and a person is not required to respond to, a collection of information unless it displays a currently valid OMB control number.

Abstract: This ICR covers the information collection activities associated with Tier 1 screening of the List 2 Chemicals under EPA's EDSP. List 2 consists of 109 identified chemicals, 41 of which are pesticide active ingredients (PAIs) and 68 are chemicals identified under the Safe Drinking Water Act (SDWA). The EDSP is established under section 408(p) of the Federal Food, Drug and Cosmetic Act (FFDCA) (21 U.S.C. 346a(p)), which requires EPA to develop a chemical screening program using appropriate validated test systems and other scientifically relevant information to determine whether certain substances

may have hormonal effects. The EDSP consists of a two-tiered approach to screen chemicals for potential endocrine disrupting effects. The purpose of Tier 1 screening is to identify substances that have the potential to interact with the estrogen, androgen, or thyroid hormone systems using a battery of assays. Substances that have the potential to interact with estrogen, androgen or thyroid systems may proceed to Tier 2, which is designed to identify any adverse endocrine-related effects caused by the substance, and establish a quantitative relationship between the dose and that endocrine effect. Additional information about the EDSP is available at *http://www.epa.gov/endo.*

This ICR addendum covers the information collection activities and burden associated with issuing orders, generating and collecting data for List 2 Chemicals. The information collection activities otherwise remain the same as those described in the existing ICR that covers EDSP Tier 1 screening of List 1 Chemicals, with a few modifications that are necessary to address procedural differences that apply to SDWA chemicals. The Agency is also establishing an electronic mechanism for these activities to reduce burden and increase efficiencies.

Form Numbers: EPA form numbers 6300–05; 6300–05–C; 6300–06; and 6300–06–C.

Respondents/Affected Entities: Entities potentially affected by this ICR are those who receive an EDSP test order issued by the Agency because they are a registrant or manufacturer/importer of a chemical substance identified on List 2. Under FFDCA section 408(p)(5)(A), EPA ''shall issue'' EDSP test orders ''to a registrant of a substance for which testing is required . . . or to a person who manufactures or imports a substance for which testing is required.''

Respondent's Obligation to Respond: Mandatory under FFDCA section 408(p).

Estimated Number of Respondents: 1,000.

Frequency of Response: On occasion.

Estimated Burden: The per response burden is estimated to range between 204 and 4,729 hours, depending on the respondent category and activities. The total annualized burden is estimated to be 296,820 hours. Burden is defined at 5 CFR 1320.03(b).

Estimated Cost: The per response cost is estimated to range between $18,842 and $297,171, depending on the respondent category and activities. The total annualized cost is estimated to be $21,054,546. This includes $400 for non-labor costs related to mailing the submissions. Delivery of paper submissions will be eliminated with the full implementation of the electronic system.

Changes in Burden Estimates: This represents an increase of 296,820 hours in the total estimated annualized burden compared with that currently approved by OMB. This is a program change that reflects the planned issuance of Tier 1 orders for List 2 chemicals to be screened under Tier 1 of the EDSP.

Dated: June 4, 2013.

John Moses,

Director, Collection Strategies Division.

[FR Doc. 2013–14233 Filed 6–13–13; 8:45 am]

BILLING CODE 6560–50–P

ENVIRONMENTAL PROTECTION AGENCY

[EPA–HQ–OPPT–2013–0229; FRL–9386–6]

Certain New Chemicals; Receipt and Status Information

AGENCY: Environmental Protection Agency (EPA).

ACTION: Notice.

SUMMARY: The Toxic Substances Control Act (TSCA) requires any person who intends to manufacture (defined by statute to include import) a new chemical (i.e., a chemical not on the TSCA Chemical Substances Inventory (TSCA Inventory)) to notify EPA and comply with the statutory provisions pertaining to the manufacture of new chemicals. In addition under TSCA, EPA is required to publish in the **Federal Register** a notice of receipt of a premanufacture notice (PMN) or an application for a test marketing exemption (TME), and to publish in the **Federal Register** periodic status reports on the new chemicals under review and the receipt of notices of commencement (NOC) to manufacture those chemicals. This document, which covers the period from March 11, 2013 to April 19, 2013, and provides the required notice and status report, consists of the PMNs pending or expired, and the NOC to manufacture a new chemical that the Agency has received under TSCA section 5 during this time period.

DATES: Comments identified by the specific PMN number or TME number, must be received on or before July 15, 2013.

ADDRESSES: Submit your comments, identified by docket identification (ID) number EPA–HQ–OPPT–2013–0229, and the specific PMN number or TME number for the chemical related to your comment, by one of the following methods:

- *Federal eRulemaking Portal: http://www.regulations.gov.* Follow the online instructions for submitting comments.
- *Mail:* Document Control Office (7407M), Office of Pollution Prevention and Toxics (OPPT), Environmental Protection Agency, 1200 Pennsylvania Ave., NW., Washington, DC 20460–0001.
- *Hand Delivery:* OPPT Document Control Office (DCO), EPA East Bldg., Rm. 6428, 1201 Constitution Ave. NW., Washington, DC. The DCO is open from 8 a.m. to 4 p.m., Monday through Friday, excluding legal holidays. The telephone number for the DCO is (202) 564–8930. Such deliveries are only accepted during the DCO's normal hours of operation, and special arrangements should be made for deliveries of boxed information.

Instructions: EPA's policy is that all comments received will be included in the docket without change and may be made available online at *http://www.regulations.gov,* including any personal information provided, unless the comment includes information claimed to be Confidential Business Information (CBI) or other information whose disclosure is restricted by statute. Do not submit information that you consider to be CBI or otherwise protected through regulations.gov or email. The regulations.gov Web site is an ''anonymous access'' system, which means EPA will not know your identity or contact information unless you provide it in the body of your comment. If you send an email comment directly to EPA without going through regulations.gov, your email address will be automatically captured and included as part of the comment that is placed in the docket and made available on the Internet. If you submit an electronic comment, EPA recommends that you include your name and other contact information in the body of your comment and with any disk or CD–ROM you submit. If EPA cannot read your comment due to technical difficulties and cannot contact you for clarification, EPA may not be able to consider your comment. Electronic files should avoid the use of special characters, any form of encryption, and be free of any defects or viruses.

Docket: All documents in the docket are listed in the docket index available at *http://www.regulations.gov.* Although listed in the index, some information is not publicly available, e.g., CBI or other information whose disclosure is restricted by statute. Certain other material, such as copyrighted material, will be publicly available only in hard copy. Publicly available docket materials are available electronically at

http://www.regulations.gov, or, if only available in hard copy, at the OPPT Docket. The OPPT Docket is located in the EPA Docket Center (EPA/DC) at Rm. 3334, EPA West Bldg., 1301 Constitution Ave., NW., Washington, DC. The EPA/DC Public Reading Room hours of operation are 8:30 a.m. to 4:30 p.m., Monday through Friday, excluding legal holidays. The telephone number of the EPA/DC Public Reading Room is (202) 566–1744, and the telephone number for the OPPT Docket is (202) 566–0280. Docket visitors are required to show photographic identification, pass through a metal detector, and sign the EPA visitor log. All visitor bags are processed through an X-ray machine and subject to search. Visitors will be provided an EPA/DC badge that must be visible at all times in the building and returned upon departure.

FOR FURTHER INFORMATION CONTACT:

For technical information contact: Bernice Mudd, Information Management Division (7407M), Office of Pollution Prevention and Toxics, Environmental Protection Agency, 1200 Pennsylvania Ave. NW., Washington, DC 20460–0001; telephone number: (202) 564–8951; fax number: (202) 564–8955; email address: *mudd.bernice@epa.gov.*

For general information contact: The TSCA-Hotline, ABVI-Goodwill, 422 South Clinton Ave., Rochester, NY 14620; telephone number: (202) 554–1404; email address: *TSCA-Hotline@epa.gov.*

SUPPLEMENTARY INFORMATION:

I. General Information

A. Does this action apply to me?

This action is directed to the public in general. As such, the Agency has not attempted to describe the specific entities that this action may apply to. Although others may be affected, this action applies directly to the submitter of the PMNs addressed in this action.

B. What should I consider as I prepare my comments for EPA?

1. *Submitting CBI.* Do not submit this information to EPA through regulations.gov or email. Clearly mark the part or all of the information that you claim to be CBI. For CBI information in a disk or CD–ROM that you mail to EPA, mark the outside of the disk or CD–ROM as CBI and then identify electronically within the disk or CD–ROM the specific information that is claimed as CBI. In addition to one complete version of the comment that includes information claimed as CBI, a copy of the comment that does not contain the information claimed as CBI must be submitted for inclusion in the public docket. Information so marked will not be disclosed except in accordance with procedures set forth in 40 CFR part 2.

2. *Tips for preparing your comments.* When submitting comments, remember to:

i. Identify the document by docket ID number and other identifying information (subject heading, **Federal Register** date and page number).

ii. Follow directions. The Agency may ask you to respond to specific questions or organize comments by referencing a Code of Federal Regulations (CFR) part or section number.

iii. Explain why you agree or disagree; suggest alternatives and substitute language for your requested changes.

iv. Describe any assumptions and provide any technical information and/or data that you used.

v. If you estimate potential costs or burdens, explain how you arrived at your estimate in sufficient detail to allow for it to be reproduced.

vi. Provide specific examples to illustrate your concerns and suggest alternatives.

vii. Explain your views as clearly as possible, avoiding the use of profanity or personal threats.

viii. Make sure to submit your comments by the comment period deadline identified.

II. Why is EPA taking this action?

EPA classifies a chemical substance as either an ''existing'' chemical or a ''new'' chemical. Any chemical substance that is not on EPA's TSCA Inventory is classified as a ''new chemical,'' while those that are on the TSCA Inventory are classified as an ''existing chemical.'' For more information about the TSCA Inventory go to: *http://www.epa.gov/opptintr/newchems/pubs/inventory.htm.* Anyone who plans to manufacture or import a new chemical substance for a non-exempt commercial purpose is required by TSCA section 5 to provide EPA with a PMN, before initiating the activity. Section 5(h)(1) of TSCA authorizes EPA to allow persons, upon application, to manufacture (includes import) or process a new chemical substance, or a chemical substance subject to a significant new use rule (SNUR) issued under TSCA section 5(a), for ''test marketing'' purposes, which is referred to as a test marketing exemption, or TME. For more information about the requirements applicable to a new chemical go to: *http://www.epa.gov/oppt/newchems.*

Under TSCA sections 5(d)(2) and 5(d)(3), EPA is required to publish in the **Federal Register** a notice of receipt of a PMN or an application for a TME and to publish in the **Federal Register** periodic status reports on the new chemicals under review and the receipt of NOCs to manufacture those chemicals. This status report, which covers the period from March 11, 2013 to April 19, 2013, consists of the PMNs pending or expired, and the NOCs to manufacture a new chemical that the Agency has received under TSCA section 5 during this time period.

III. Receipt and Status Reports

In Table I. of this unit, EPA provides the following information (to the extent that such information is not claimed as CBI) on the PMNs received by EPA during this period: The EPA case number assigned to the PMN, the date the PMN was received by EPA, the projected end date for EPA's review of the PMN, the submitting manufacturer/importer, the potential uses identified by the manufacturer/importer in the PMN, and the chemical identity.

TABLE I—58 PMNS RECEIVED FROM 3/11/13 TO 4/19/13

Case No.	Received date	Projected notice end date	Manufacturer/ importer	Use	Chemical
P–13–0338 ...	3/11/2013	6/8/2013	CBI	(G) Polymer intermediate for adhesive manufacture.	(G) Diphenylmethane diisocyanate prepolymer.
P–13–0339 ...	3/12/2013	6/9/2013	CBI	(G) Destructive use	(G) Organometallics, reaction products with silica, halogenated.
P–13–0340 ...	3/12/2013	6/9/2013	Pavco, Inc	(S) Corrosion resistant coating for electrodeposited zinc.	(S) 1,2,3-Propanetricarboxylicacid, 2-hydroxy-, chromium(3+) salt (1:?).

TABLE I—58 PMNS RECEIVED FROM 3/11/13 TO 4/19/13—Continued

Case No.	Received date	Projected notice end date	Manufacturer/ importer	Use	Chemical
P–13–0341 ...	3/12/2013	6/9/2013	CBI	(G) Renewable chemical intermediate.	(G) Alkenoic acid ester.
P–13–0342 ...	3/14/2013	6/11/2013	Henkel Corporation	(S) Site limited polymerization catalyst used at 0.005% in polmerizations then removed from final polymer before formulation.	(S) 1,2-Ethanediamine, *N,N*-bis[2-(dimethylamino)ethyl]-*N',N'*-dimethyl-(9ci).
P–13–0343 ...	3/14/2013	6/11/2013	UBE America, Inc ..	(G) Resin ingredient	(S) [1,1'-Biphenyl]-3,3',4,4'-tetracarboxylic acid.
P–13–0344 ...	3/15/2013	6/12/2013	CBI	(G) Construction materials additive.	(G) Substituted carboxylic acid, polymer with disubstituted alkenyl disubstituted 2-propenoic acid, alkyl, alkyl ester, polymer with 2,2-bis[[(substituted-2-alkenyl)oxy]methyl]-substituted alkanediyl di-2-alkenoate and 2-(hydroxyalkyl)-2-[[(substituted 2-alkenyl)oxy]methyl]-1,3-propanediyl di-2-alkenoate.
P–13–0345 ...	3/19/2013	6/16/2013	CBI	(G) Solvent	(G) Polyfluoropolychloroalkene.
P–13–0346 ...	3/20/2013	6/17/2013	CBI	(G) The notified substance will be encapsulated in a polymer matrix and used as part of a fragrance slurry in consumer products, such as fabric care and cleaning products.	(G) Carbonic acid, dialkyl ester.
P–13–0347 ...	3/20/2013	6/17/2013	CBI	(G) Chemical intermediate	(G) Aromatic sulfonamide polyether.
P–13–0348 ...	3/20/2013	6/17/2013	CBI	(G) Reactant	(G) Polyether substituted azo colorant.
P–13–0349 ...	3/20/2013	6/17/2013	CBI	(G) Coloring agent	(G) Polyether substituted azo colorant.
P–13–0350 ...	3/21/2013	6/18/2013	CBI	(G) Destructive use	(G) Organometallic polymerization catalyst.
P–13–0351 ...	3/21/2013	6/18/2013	Tire Recycling & Processing, LLC.	(S) Feed stock	(S) Tires, waste, pyrolyzed, carbon black fraction.
P–13–0352 ...	3/21/2013	6/18/2013	Henkel Corporation	(S) Component of adhesive used for panel lamination and other structural assemblies.	(G) Acrylic modified polyether-ester polyurethane prepolymer.
P–13–0353 ...	3/25/2013	6/22/2013	IBM East Fishkill ...	(S) Semiconductor chip sludge, slimes as an additive in cement manufacturing.	(S) Slimes and sludges, semiconductor chip manufacturer chemical mechanical planarization process, wastewater treatment.
P–13–0354 ...	3/26/2013	6/23/2013	CBI	(G) Adhesion promoter, open, non-dispersive use.	(G) Substituted acrylic monomer.
P–13–0355 ...	3/26/2013	6/23/2013	Mitsubishi Gas Chemical America, Inc.	(G) Polymeric coating	(S) Phenol, 2,6-dimethyl-, homopolymer, ether with 2,2',3,3',5,5'-hexamethyl[1,1'-biphenyl]-4,4'-diol (2:1), bis[(ethenylphenyl)methyl] ether.
P–13–0356 ...	3/27/2013	6/24/2013	CBI	(G) Thermoplastic urethane film.	(G) Aliphatic diol, polymer with polymeric diol, aliphatic diisocyanate and aliphatic diol.
P–13–0357 ...	3/28/2013	6/25/2013	CBI	(G) Electrolyte for lithium batteries.	(G) Alkene carbonate derivative.
P–13–0358 ...	3/28/2013	6/25/2013	Reichhold, Inc	(S) Intermediate for coconut oil alkyd resins.	(G) Vegetable oil esters.
P–13–0359 ...	3/28/2013	6/25/2013	H.B. Fuller Company.	(G) Industrial adhesive	(G) 1,3-Isobenzofurandione, polymer with alkanendiol, 1,6-hexanediol,.alpha.-hydro-.omega.-hydroxypoly[oxy(methyl-1,2-ethanediyl)],1,1'-methylenebis[4-isocyanatobenzene] and poly(oxyalkanediyl) glyceryl ether.
P–13–0360 ...	3/28/2013	6/25/2013	H.B. Fuller Company.	(G) Industrial adhesive	(G) Alkane acid, polymer with alkanendiol, 1,6-hexanediol,.alpha.-hydro-.omega.-hydroxypoly(oxy-1,4-butanediyl), 1,3-isobenzofurandione, 1,1'-methylenebis[4-isocyanatobenzene] and poly(oxyalkanediyl) glyceryl ether.

TABLE I—58 PMNS RECEIVED FROM 3/11/13 TO 4/19/13—Continued

Case No.	Received date	Projected notice end date	Manufacturer/ importer	Use	Chemical
P–13–0361 ...	3/28/2013	6/25/2013	H.B. Fuller Company.	(G) Industrial adhesive	(G) Hexanedioic acid, polymer with alkanendiol, 1,2-ethanediol, 1,6-hexanediol,.alpha.-hydro-.omega.-hydroxypoly[oxy(methyl-1,2-ethanediyl)], 1,1'-methylenebis[4-isocyanatobenzene].
P–13–0362 ...	3/28/2013	6/25/2013	H.B. Fuller Company.	(G) Industrial adhesive	(G) 1,3-Benzenedicarboxylic acid, polymer with 1,4-dimethyl 1,4-benzenedicarboxylate, alkanediol, alkane acid, 1,2-ethanediol, hexanedioic acid, 1,6-hexanediol, alkyldiol ester, 1,3-isobenzofurandione, 1,1'-methylenebis[4-isocyanatobenzene], 2-methyloxirane, 2-oxepanone and 2,2'-oxybis[ethanol].
P–13–0363 ...	3/28/2013	6/25/2013	H.B. Fuller Company.	(G) Industrial adhesive	(G) Alkane acid, polymer with alkanediol, hexanedioic acid, 1,6-hexanediol, .alpha.-hydro-.omega.-hydroxypoly[oxy(methyl-1,2-ethanediyl)], 1,1'-methylenebis[4-isocyanatobenzene], 2-oxepanone, and poly(oxy-alkanediyl) glyceryl ether.
P–13–0364 ...	3/28/2013	6/25/2013	H.B. Fuller Company.	(G) Industrial adhesive	(G) Alkane acid, polymer with 1,6-hexanediol, .alpha.-hydro-.omega.-hydroxypoly(oxy-1,4-butanediyl), 1,1'-methylenebis[4-isocyanatobenzene], and poly(oxy-alkanediyl) glyceryl ether.
P–13–0365 ...	3/28/2013	6/25/2013	CBI	(G) Adhesive component	(G) MDI modified polyalkene glycols.
P–13–0366 ...	3/31/2013	6/28/2013	CBI	(G) Surfactant or emulsifier ...	(G) Glycolipid.
P–13–0367 ...	4/1/2013	6/29/2013	CBI	(S) Scale inhibitor in oilfield applications.	(G) Carboxylated phosphonated allyl sulphonate polymer.
P–13–0368 ...	4/1/2013	6/29/2013	The Lewis Chemical Company.	(S) Corrosion inhibitor for oilfield applications.	(S) Polyoxyethylene oleyl amine.
P–13–0369 ...	4/3/2013	7/1/2013	CBI	(G) A solids conglomeration additive for down-hole treatment of oil and gas wells to prevent the undesirable production of solids. e.g., sand, proppant.	(G) Polyphosphoric acids, esters with substituted amines, compounds with alkyl pyridines.
P–13–0370 ...	4/4/2013	7/2/2013	CBI	(G) Surfactant for floor polish and coatings.	(G) Fluorosurfactant.
P–13–0371 ...	4/2/2013	6/30/2013	CBI	(G) Chemical intermediate	(G) Substituted phenylsulfonamide compound.
P–13–0372 ...	4/2/2013	6/30/2013	CBI	(G) Polymer	(G) Polyether polyurethane.
P–13–0373 ...	4/5/2013	7/3/2013	CBI	(S) Battery material	(G) Mixed metal oxide.
P–13–0374 ...	4/5/2013	7/3/2013	Dow Chemical U.S.A..	(G) Chemical intermediate	(G) Substituted picolinic acid.
P–13–0375 ...	4/5/2013	7/3/2013	International Flavors & Fragrances, Inc.	(S) Fragrance ingredient for use in fragrances for soaps, detergents, cleaners and other household products.	(S) 6-decenal, (6e)-6-decenal, (6z)-7-decenal, (7e)-7-decenal, (7z)-8-decenal, (8e)-8-decenal, (8z)-
P–13–0376 ...	4/8/2013	7/6/2013	CBI	(G) Component	(G) Polyester resin.
P–13–0377 ...	4/8/2013	7/6/2013	CBI	(G) Water and oil repellent ...	(G) Perfluoroalkylethyl methacrylate copolymer.
P–13–0378 ...	4/9/2013	7/7/2013	CBI	(S) Polyurethane catalyst	(G) Carboxylic anhydride, polymer with -hydro-hydroxypoly(oxy-1,2-diethanediyl), compound with 2,3,4,6,7,8,9,10-octahydropyrimido-[1,2-a]azepine.
P–13–0379 ...	4/9/2013	7/7/2013	CBI	(G) Adhesive and sealant component.	(G) Aromatic polyester.
P–13–0380 ...	4/9/2013	7/7/2013	CBI	(G) Ultra violet cure industrial coating.	(S) 2-Propenoic acid, 2-methyl-, 1,1-dimethylethyl ester, polymer with butyl 2-propenoate, ethenylbenzene and 2-oxiranylmethyl 2-methyl-2-propenoate, 2-propenoate.

TABLE I—58 PMNS RECEIVED FROM 3/11/13 TO 4/19/13—Continued

Case No.	Received date	Projected notice end date	Manufacturer/ importer	Use	Chemical
P–13–0381 ...	4/10/2013	7/8/2013	CBI	(G) Pigment	(G) Pyrrolopyrrol.
P–13–0382 ...	4/11/2013	7/9/2013	CBI	(G) Plastics	(G) Castor oil, reaction products with an alcohol amine.
P–13–0383 ...	4/11/2013	7/9/2013	CBI	(G) Plastics	(G) Soybean oil, reaction products with an alcohol amine.
P–13–0384 ...	4/11/2013	7/9/2013	INEOS Oligomers ..	(S) Drilling fluid	(G) Tetradecene and C_{16} olefins and paraffins.
P–13–0385 ...	4/11/2013	7/9/2013	CBI	(G) Plastics	(G) Soybean oil, reaction products with an alcohol amine, polymer with a dicarboxylic acid.
P–13–0386 ...	4/11/2013	7/9/2013	CBI	(G) Plastics	(G) Soybean oil, reaction products with an alcohol amine and a dicarboxylic acid.
P–13–0387 ...	4/11/2013	7/9/2013	CBI	(G) Lubricant additive	(G) Amines, polyethylenepoly-, reaction products with aryl anhydride and succinic monopolyisobutylene derivs.
P–13–0388 ...	4/12/2013	7/10/2013	CBI	(S) Plasticizer for PVC molded articles.	(G) Hexanedioic acid, polymer with 1,2-butanediol, diesters with alkene reaction products.
P–13–0389 ...	4/12/2013	7/10/2013	CBI	(G) Renewable chemical intermediate.	(G) Alkenyl ether.
P–13–0390 ...	4/17/2013	7/15/2013	Dow Chemical Company.	(G) Chemical intermediate	(G) Halogenated, substituted picolinic ester.
P–13–0391 ...	4/17/2013	7/15/2013	Dow Chemical Company.	(G) Chemical intermediate	(G) Halogenated phenylboronic acid.
P–13–0392 ...	4/17/2013	7/15/2013	DIC International (USA) LLC.	(G) A new substance for the wood, plastic and automotive paint material.	(G) Acrylic acid esters polymer with polyisocyanate.
P–13–0393 ...	4/17/2013	7/15/2013	H.B. Fuller Company.	(G) Industrial adhesive	(G) 1,3-Benzenedicarboxylic acid, polymer with 1,4-benzenedicarboxylic acid, 1,4-dimethyl 1,4-benzenedicarboxylate, 2,2-dimethyl-1,3-propanediol, dodecanedioic acid, 1,2-ethanediol, hexanedioic acid, 1,6-hexanediol, alkyldiol ester and aromatic isocyanate.
P–13–0394 ...	4/18/2013	7/16/2013	CBI	(G) Polymer additive	(G) Hydrogenated terpene phenolic copolymer.
P–13–0395 ...	4/18/2013	7/16/2013	Miwon North America, Inc.	(S) Resins for industrial coating.	(G) Urethane acrylate.

In Table II. of this unit, EPA provides the following information (to the extent that such information is not claimed as CBI) on the NOCs received by EPA during this period: The EPA case number assigned to the NOC, the date the NOC was received by EPA, the projected end date for EPA's review of the NOC, and chemical identity.

TABLE II—53 NOCS RECEIVED FROM 3/11/13 TO 4/19/13

Case No.	Received date	Commencement notice end date	Chemical
J–13–0003	4/18/2013	4/17/2013	(G) *Saccaromyces cerevisiae* modified.
P–01–0697	3/18/2013	2/19/2013	(G) Acrylic copolymer.
P–05–0700	3/25/2013	3/1/2013	(S) Cyclohexanamine, *N*-[(diethoxymethylsilyl)methyl]-
P–05–0701	4/1/2013	3/12/2013	(G) Sulphonated azo dye.
P–10–0362	4/3/2013	3/28/2013	(G) Substituted bis-phenol.
P–11–0240	4/9/2013	3/19/2013	(G) Modified epoxy resin.
P–11–0247	4/16/2013	3/28/2013	(G) Perfluoroalkylethyl methacrylate copolymer.
P–11–0327	3/28/2013	3/6/2013	(S) Distillates (lignocellulosic), C_{5-40}.
P–11–0328	3/20/2013	3/6/2013	(S) Parraffin waxes (lignocellulosic), hydrotreated, C_{5-40}-branched, cyclic and linear.
P–11–0329	3/20/2013	3/6/2013	(S) Naphtha (lignocellulosic), hydrotreated, C_{5-12}-branched, cyclic and linear.
P–11–0330	3/20/2013	3/6/2013	(S) Kerosine (lignocellulosic), hydrotreated, C_{8-16}-branched, cyclic and linear.
P–11–0331	3/20/2013	3/6/2013	(S) Distillates (lignocellulosic), hydrotreated, C_{8-26}-branched, cyclic, and linear.
P–11–0332	3/20/2013	3/6/2013	(S) Residual oils (lignocellulosic), hydrotreated, C_{20-40}-branched, cyclic and linear.
P–11–0396	3/13/2013	2/26/2013	(G) Acrylate copolymer.
P–11–0397	3/13/2013	2/26/2013	(G) Acrylate copolymer.
P–11–0479	4/10/2013	4/3/2013	(G) Vinylalkoxysilane.

TABLE II—53 NOCS RECEIVED FROM 3/11/13 TO 4/19/13—Continued

Case No.	Received date	Commencement notice end date	Chemical
P–11–0550	3/14/2013	1/15/2013	(G) N-coco alkyltrimethylene0-, polymers with bisphenol A, epichlorohydrin and amodified aliphatic amine.
P–11–0551	3/14/2013	1/15/2013	(G) N-coco alkyltrimethylenedi-, polymer with bisphenol A, epichlorohydrin and modified aliphatic amine.
P–11–0653	4/3/2013	3/26/2013	(G) Perfluoroalkylethyl methacrylate copolymer.
P–12–0031	4/12/2013	3/27/2013	(G) Modified fluorinated acrylate.
P–12–0042	3/21/2013	1/24/2013	(G) Polyurethane aqueous dispersion.
P–12–0080	4/12/2013	4/8/2013	(G) Fluoroethylene-vinylether copolymer.
P–12–0117	4/3/2013	3/21/2013	(G) Substituted pyridinium salt.
P–12–0145	4/8/2013	12/18/2012	(G) Styrene acryl copolymer.
P–12–0256	4/9/2013	4/6/2013	(G) Dialkyldithiophosphate salt.
P–12–0380	4/17/2013	3/21/2013	(G) Monoazo compound.
P–12–0411	4/9/2013	3/21/2013	(G) Alkenedioic acid dialkyl ester, reaction products with diamine alkenoic acid alkyl esters.
P–12–0440	3/13/2013	2/28/2013	(G) Phenol capped urethane prepolymer.
P–12–0461	3/12/2013	2/22/2013	(S) Hexandioic acid, polymer wih 1,3-diethyl propanediote, oxybis[propanol] and 1,2-propanediol, mono[2-hydroxy-3-[(1-oxoneodecyl)oxy]propyl] ester, 3-oxobutanoate.
P–12–0474	4/11/2013	4/10/2013	(G) Ultra violet curable acrylate.
P–12–0484	3/27/2013	3/8/2013	(G) Polyester polyol based upon glycerin.
P–12–0530	4/12/2013	3/18/2013	(G) Amine acetate.
P–12–0545	4/9/2013	3/11/2013	(G) Aromatic amido-amine-modified aliphatic hydrocarbon resin.
P–12–0546	4/9/2013	3/11/2013	(G) Aromatic amido-amine-modified aliphatic hydrocarbon resin.
P–12–0551	4/9/2013	4/3/2013	(G) Aromatic hydrocarbon mixture.
P–12–0584	3/20/2013	3/15/2013	(G) Alkyl phosphonate.
P–13–0013	4/12/2013	3/26/2013	(G) Polyurethane polymer.
P–13–0031	3/26/2013	3/20/2013	(G) Isocyanate terminated polyester/polyether/mdi polymer.
P–13–0032	3/19/2013	3/18/2013	(G) Alkenoic acid, ester with alkylpolyol, polymer with disubsituted alkane.
P–13–0039	4/2/2013	3/25/2013	(S) D-glycopyranose, oligomeric, C_{10-16}-alkyl decyl octyl glycosides, 2-hydroxy-3-(trimethylammonio) propyl ethers, chlorides, polymers with 1,3-dichloro-2-propanol.
P–13–0094	3/25/2013	2/21/2013	(G) Acrylic ester functionalized polyether polymer.
P–13–0108	3/20/2013	2/25/2013	(S) Bromine, manufacturer of, by-products from, distant residues.
P–13–0109	4/15/2013	3/28/2013	(S) Alkanes, C_{24-28}, chloro.
P–13–0119	4/4/2013	3/22/2013	(S) D-glucitol, 1,3:2,4-bis-o-[(4-ethylphenyl)methylene]-
P–13–0121	3/20/2013	2/20/2013	(G) Substituted polymeric aromatic amine azo colorant.
P–13–0137	3/20/2013	3/4/2013	(S) Butanedioic acid, 2-(2-octen-1-yl)-
P–13–0170	3/27/2013	3/19/2013	(G) Phosphoric acid, mixed esters.
P–13–0174	4/2/2013	3/24/2013	(G) Substituted carbomoncycles, polymer with alkyldiol.
P–13–0177	3/28/2013	3/20/2013	(G) Polyxiloxane acrylic resin.
P–13–0178	4/8/2013	3/31/2013	(S) Cyclopentanol, 2-methyl-5-(1-methylethyl)-, 1-propanoate.
P–13–0179	4/16/2013	3/26/2013	(G) Alkyl-substituted thiophosphoric acid triamide.
P–13–0194	4/11/2013	4/9/2013	(G) Silylated polyazamide.
P–13–0222	4/16/2013	4/15/2013	(G) Synthetic crude oil.

If you are interested in information that is not included in these tables, you may contact EPA as described in Unit II. to access additional non-CBI information that may be available.

List of Subjects

Environmental protection, Chemicals, Hazardous substances, Imports, Notice of commencement, Premanufacturer, Reporting and recordkeeping requirements, Test marketing exemptions.

Dated: June 3, 2013.

Chandler Sirmons,

Acting Director, Information Management Division, Office of Pollution Prevention and Toxics.

[FR Doc. 2013–14196 Filed 6–13–13; 8:45 am]

BILLING CODE 6560–50–P

ENVIRONMENTAL PROTECTION AGENCY

[EPA–HQ–OPPT–2007–1080; FRL–9375–7]

Endocrine Disruptor Screening Program; Final Policies and Procedures for Screening Safe Drinking Water Act Chemicals

AGENCY: Environmental Protection Agency (EPA).

ACTION: Notice.

SUMMARY: This document describes EPA's final policies and procedures for requiring Tier 1 screening under the Endocrine Disruptor Screening Program (EDSP) of chemicals for which EPA may issue EDSP test orders pursuant to section 1457 of the Safe Drinking Water Act (SDWA) and section 408(p) of the Federal Food, Drug, and Cosmetic Act (FFDCA). Section 408(p) of the FFDCA directed EPA to develop a chemical screening program using appropriate validated test systems and other scientifically relevant information (OSRI) to determine whether certain chemicals may have hormonal effects. These final policies and procedures supplement the EDSP policies and procedures that were published in the **Federal Register** on April 15, 2009.

FOR FURTHER INFORMATION CONTACT:

For technical information contact: Mike Mattheisen, Chemical Information and Testing Branch (7405M), Office of Pollution Prevention and Toxics, Environmental Protection Agency, 1200 Pennsylvania Ave. NW., Washington, DC 20460–0001; telephone number: (202) 564–3077; email address: *mattheisen.mike@epa.gov* or Pat West, Office of Science Coordination and Policy (7203M), Environmental Protection Agency, 1200 Pennsylvania Ave. NW., Washington, DC 20460–0001;

telephone number: (202) 564–1656; email address: *west.pat@epa.gov.*

For general information contact: The TSCA-Hotline, ABVI-Goodwill, 422 South Clinton Ave., Rochester, NY 14620; telephone number: (202) 554–1404; email address: *TSCA-Hotline@epa.gov.*

SUPPLEMENTARY INFORMATION:

I. General Information

A. Does this action apply to me?

You may be affected by this action if you produce, manufacture, use, or import chemicals (including pesticide chemicals) that may be found in sources of drinking water; if you manufacture or import chemicals that degrade to chemicals found in sources of drinking water; or if you are, or may otherwise be, involved in the testing of chemicals for potential endocrine effects. The following list of North American Industrial Classification System (NAICS) codes is not intended to be exhaustive, but rather provides a guide to help readers determine whether this document applies to them. Potentially affected entities may include:

- Chemical manufacturers, importers, and processors (NAICS code 325), *e.g.,* persons who manufacture, import, or process chemicals.
- Pesticide, fertilizer, and other agricultural chemical manufacturers, importers, and processors (NAICS code 3253), *e.g.,* persons who manufacture, import, or process pesticide; fertilizer; or agricultural chemicals.
- Scientific research and development services (NAICS code 5417), *e.g.,* persons who conduct testing of chemicals for endocrine effects.

To determine whether you or your business may be affected by this action, you should carefully examine the applicability provisions in Unit III.C., and examine FFDCA section 408(p). If you have any questions regarding the applicability of this action to a particular entity, consult either technical person listed under **FOR FURTHER INFORMATION CONTACT**.

B. How can I get copies of this document and other related information?

The docket for this action, identified by docket identification (ID) number EPA–HQ–OPPT–2007–1080, is available at *http://www.regulations.gov* or at the Office of Pollution Prevention and Toxics Docket (OPPT Docket), Environmental Protection Agency Docket Center (EPA/DC), EPA West Bldg., Rm. 3334, 1301 Constitution Ave. NW., Washington, DC. The Public Reading Room is open from 8:30 a.m. to 4:30 p.m., Monday through Friday, excluding legal holidays. The telephone number for the Public Reading Room is (202) 566–1744, and the telephone number for the OPPT Docket is (202) 566–0280. Please review the visitor instructions and additional information about the docket available at *http://www.epa.gov/dockets.*

II. Background

A. What action is the agency taking?

The Agency is publishing final policies and procedures for issuing EDSP test orders for chemicals pursuant to the Agency's authority under SDWA section 1457 (*i.e.,* ''SDWA chemicals''). Section 1457 of the SDWA authorizes EPA to issue EDSP test orders to manufacturers and importers of chemicals that may be found in sources of drinking water and to which a substantial population may be exposed (42 U.S.C. 300j–17). SDWA chemicals encompass a wide variety of chemicals, including industrial and pesticide chemicals, ingredients in pharmaceuticals and personal care products, and degradates.

These SDWA/FFDCA policies and procedures supplement the Federal Insecticide, Fungicide, and Rodenticide Act (FIFRA)/FFDCA policies and procedures that were published in the **Federal Register** issue of April 15, 2009 (FIFRA/FFDCA policies and procedures) (Ref. 1). The FIFRA/FFDCA policies and procedures (Ref. 1) were developed primarily for the issuance of EDSP test orders on pesticide active and inert ingredients, which were the chemicals comprising the first EDSP chemical list (first list). Consequently, some of the FIFRA/FFDCA policies and procedures (Ref. 1) reflect issues uniquely associated with the pesticide market and the specific regulatory context under which EPA regulates pesticide chemicals. In this document, EPA describes the policies and procedures associated with the screening of SDWA chemicals, which include certain modifications to the FIFRA/FFDCA policies and procedures that are intended to address issues that are unique to SDWA chemicals, or to address the circumstances where other competing considerations for SDWA chemicals warrant a modification of the FIFRA/FFDCA policies and procedures.

This document discusses the policy considerations for SDWA chemicals in the following areas:

- Who would receive EDSP test orders for SDWA chemicals? Unit VI.A.
- How will recipients of EDSP test orders for SDWA chemicals be notified? Unit VI.B.
- How will the public know who has received an EDSP test order for a SDWA chemical or who has supplied data? Unit VI.C.
- How will the agency minimize duplicative testing? Unit VI.D.
- What are the potential responses to EDSP test orders for SDWA chemicals? Unit VI.E.
- How can an EDSP test order responses and data be submitted electronically? Unit VI.F.
- How will EPA facilitate joint data development, cost sharing, and data compensation for SDWA chemicals? Unit VI.G.
- What procedures can EPA apply for handling Confidential Business Information (CBI) for SDWA chemicals? Unit VI.H.
- What is the process for contesting an EDSP test order or consequences for failure to respond or comply with an EDSP test order? Unit VI.I.
- What is the informal administrative review procedure? Unit VI.J.
- What are the adverse effects reporting requirements? Unit VI.K.

While the FIFRA/FFDCA policies and procedures (Ref. 1) remain relevant, SDWA chemical EDSP test order recipients are encouraged to refer to this document to fully understand all of the relevant policies and procedures. In addition, a new EDSP test order template for issuance of EDSP test orders under SDWA section 1457 and FFDCA section 408(p)(5) is available in the docket for this document (Ref. 2).

EPA is publishing two related notices elsewhere in this **Federal Register** issue. One announces the final second EDSP chemical list (second list), which includes both SDWA chemicals and pesticide active ingredients (PAIs). The other announces the submission to the Office of Management and Budget (OMB) of the final Information Collection Request (ICR) Addendum that describes the estimated paperwork burden and costs associated with the second list.

B. What are the statutory authorities for the policies discussed in this document?

SDWA is the primary Federal law that ensures the quality of Americans' drinking water. Under SDWA, EPA sets standards for drinking water and works closely with States, localities, and water suppliers to implement these standards. SDWA authorizes EPA to set national standards for drinking water to protect against both naturally occurring and man-made contaminants that may be found in drinking water (42 U.S.C. 300g–1).

Section 1457 of SDWA authorizes EPA to require testing, under FFDCA

section 408(p) (21 U.S.C. 346(a)(p)), of any chemical that may be found in sources of drinking water if the EPA Administrator determines that a substantial population may be exposed to such chemical (42 U.S.C. 300j–17).

Section 408(p)(1) of FFDCA requires EPA ''to develop a screening program, using appropriate validated test systems and other scientifically relevant information, to determine whether certain substances may have an effect in humans that is similar to an effect produced by a naturally occurring estrogen, or such other effects as [EPA] may designate'' (21 U.S.C. 346a(p)(1)).

Section 408(p)(3) of FFDCA expressly requires that EPA ''shall provide for the testing of all pesticide chemicals'' (21 U.S.C. 346a(p)(3)). Section 201 of FFDCA defines ''pesticide chemical'' as ''any substance that is a pesticide within the meaning of [FIFRA], including all active and pesticide inert ingredients of such pesticide'' (21 U.S.C. 231(q)(1)).

Section 408(p)(5)(A) of FFDCA provides that the EPA Administrator ''shall issue an order to a registrant of a substance for which testing is required under [FFDCA section 408(p)], or to a person who manufactures or imports a substance for which testing is required under [FFDCA section 408(p)], to conduct testing in accordance with the screening program . . ., and submit information obtained from the testing to the Administrator, within a reasonable time period that the [Agency] determines is sufficient for the generation of the information'' (21 U.S.C. 346a(p)(5)(A)).

The statutes discussed in this unit provide EPA with the discretion to require testing of a pesticide chemical under FFDCA alone, or in any combination of the various authorities (*e.g.,* FIFRA/FFDCA, SDWA/FFDCA, or FIFRA/SDWA/FFDCA).

Section 408(p)(5)(B) of FFDCA requires that, ''to the extent practicable, the Administrator shall minimize duplicative testing of the same substance for the same endocrine effect, develop, as appropriate, procedures for fair and equitable sharing of test costs, and develop, as necessary, procedures for handling of confidential business information'' (21 U.S.C. 346a (p)(5)(B)).

Section 408(p)(5)(D) of FFDCA provides that any person (other than a registrant) who fails to comply with a FFDCA section 408(p)(5) test order shall be liable for the same penalties and sanctions as are provided for under section 16 of the Toxic Substances Control Act (TSCA) (21 U.S.C. 346a (p)(5)(D)). Such penalties and sanctions shall be assessed and imposed in the same manner as provided in TSCA section 16. Under TSCA section 16, civil penalties of up to $37,500 per day may be assessed, after notice and an administrative hearing held on the record in accordance with section 554 of the Administrative Procedure Act (APA) (15 U.S.C. 2615(a)(1)–(2)(A)).

In addition, Congress's House Appropriations Committee Report (H. Rept.) for EPA's FY 2010 appropriations (Ref. 3), directed EPA ''to publish within 1 year of enactment a second list of no less than 100 chemicals for screening that includes drinking water contaminants, such as halogenated organic chemicals, dioxins, flame retardants (PBDEs, PCBs, PFCs), plastics (BPA), pharmaceuticals and personal care products, and issue 25 orders per year for the testing of these chemicals.''

C. Does this document contain binding requirements?

While the requirements in the statutes and in any EDSP test orders ultimately issued under FFDCA section 408(p) are binding, the policies and procedures outlined in this document are not. The policies and procedures outlined in this document merely represent the general procedures and statutory interpretations on which EPA may rely to implement the existing goals of the statutory program. However, neither EPA nor any outside party is bound by any of the policies and procedures outlined in this document. Accordingly, these policies and procedures may be modified at any time by EPA and the Agency may depart from these policies and procedures where circumstances warrant and without prior notice.

III. Background on EDSP

A. What is EDSP?

EPA developed EDSP in response to a Congressional mandate in FFDCA ''to determine whether certain substances may have an effect in humans that is similar to an effect produced by naturally occurring estrogen, or such other endocrine effect as [EPA] may designate'' (21 U.S.C. 346a(p)). As part of EDSP, EPA issues orders to collect certain test data on selected chemicals. In general, EPA intends to use the data collected under EDSP, along with other information, to determine if a pesticide chemical, or other chemicals, may pose a risk to human health or the environment due to disruption of the endocrine system. The determination of whether a chemical has the potential to interact with the endocrine system will be made on a weight of evidence basis taking into account data from the Tier 1 assays and/or OSRI. Chemicals that go through Tier 1 screening and are found to have the potential to interact with the estrogen, androgen, or thyroid hormone systems will proceed to the next stage of EDSP where EPA will determine which, if any, of the Tier 2 tests are necessary based on the available data. Tier 2 testing is designed to identify any adverse endocrine-related effects caused by the chemical, and establish a quantitative relationship between the dose and that endocrine effect. Further information regarding EDSP and requirements for Tier 1 and Tier 2 can be found on the Agency's EDSP Web site (Ref. 4). EPA is aware of no issue specific to the chemicals in the second list that would warrant any modification to the existing testing scheme, and is not proposing to adopt any.

B. Why is EPA publishing additional policies and procedures for EDSP Tier 1 screening?

As stated in the FIFRA/FFDCA policies and procedures (Ref. 1), EPA intended to develop EDSP policies and procedures that could be used in subsequent data collection efforts, including those under SDWA, but indicated that EPA may make modifications as appropriate. The Agency now believes that modifications are needed to address issues that are specific to the larger universe of chemicals that are potentially subject to EDSP testing under SDWA.

The FIFRA/FFDCA policies and procedures (Ref. 1) were originally developed for screening of pesticide chemicals and relied, in part, on a regulatory context that is specific to pesticide chemicals. The presumptions applicable in that context are not necessarily applicable to this larger universe of chemicals.

For example, much of the data that would be generated in response to an EDSP test order (particularly for pesticide active ingredients) would be entitled to the data compensation protections available under FIFRA (7 U.S.C. 136a(c)(1)(F)) and FFDCA (21 U.S.C. 346a(i)). Additionally, FIFRA section 10 prohibits EPA from releasing study data on pesticide chemicals unless the person seeking access to the information certifies that he is not an agent or employee of any multinational pesticide company (7 U.S.C. 136h(g)). Because FFDCA section 408(p) did not authorize EPA to modify these FIFRA requirements, EPA needs to ensure that the policies and procedures adopted to implement FFDCA section 408(p) would operate in a manner that would be consistent with EPA's existing FIFRA mandates. Moreover, EPA could rely on the existing FIFRA mechanisms to

effectively minimize duplicative testing, and to promote cost-sharing.

By contrast, these considerations are generally not applicable to the majority of chemicals that may be subject to EDSP screening under SDWA, such as chemicals used in pharmaceuticals and personal-care products, among others.

In addition, the statutory authority for imposing testing of SDWA chemicals, the sources of SDWA chemicals, and EPA's ability to identify manufacturers and importers, and other considerations unique to SDWA chemicals, create a need for policies and procedures specific to EDSP screening under SDWA/FFDCA authority. For example, some registered pesticide ingredients have additional uses that account for a much larger percentage of total manufacture and import. In such cases, the Agency seeks to be able to identify, and issue orders to, all relevant manufacturers and importers in a manner that creates a fair and level playing field for complying with the order.

C. When do these policies and procedures apply?

EPA has the discretion to issue EDSP test orders under the authorities of SDWA section 1457 and FFDCA section 408(p) for all chemicals, including PAIs, for which the Agency can make the requisite factual findings. As described in this document, however, EPA generally intends to use SDWA authority to require EDSP testing of SDWA chemicals that are not PAIs and FIFRA authority to require EDSP testing of PAIs and pesticide inerts, even if the PAIs and inerts have non-pesticide uses. EPA may issue SDWA/FFDCA EDSP test orders for PAIs and inerts that have non-pesticide uses, except, when PAI registrants avoid EDSP testing by canceling their registrations and leaving the market. This approach will preserve familiar data compensation and confidentiality protections established in FIFRA sections 3(c)(1)(F) and 12, as well as FFDCA section 408(i), for pesticide registrants.

IV. EDSP Policies and Procedures Considerations for SDWA Chemicals

The Agency used the following policies and procedures considerations to guide development of policies and procedures for issuing Tier 1 EDSP test orders on SDWA chemicals:

- A core part of EPA's mission is to promote public understanding of the potential risks posed by chemicals in commerce.
- The basis for an order with respect to SDWA chemicals is that a chemical may be found in sources of drinking water and a determination that a substantial population may be exposed to such chemical. Thus, SDWA/FFDCA policies and procedures should not be unnecessarily tied to the use of the chemical in any given market and should instead focus on obtaining data from companies that might be expected to contribute to a chemical's presence in drinking water.
- For simplicity, policies and procedures for SDWA chemicals should be consistent with FIFRA/FFDCA policies and procedures (Ref. 1) unless there is a reason for modifying them (*e.g.,* different statutory requirements), though for clarity EPA has written these SDWA/FFDCA policies and procedures as a complete, stand alone document.
- Procedures for EDSP testing of SDWA chemicals should strive to minimize duplicative testing and promote fair and equitable sharing of test costs, as described in FFDCA section 408(p)(5)(B).
- The Agency expects to issue SDWA/FFDCA EDSP test orders for pesticide inert ingredients that are listed for EDSP screening with a SDWA section 1457 finding; it has also been the Agency's experience that pesticide inerts generally have a much larger market than solely as ingredients in pesticide formulations. For these reasons EPA believes it is reasonable and equitable to initially issue SDWA/FFDCA EDSP test orders on SDWA chemicals that are not PAIs.
- As noted previously, EPA intends to require EDSP testing pursuant to FIFRA and FFDCA for registrants of a pesticide chemical, even if the chemical has non-pesticide uses. If, however, recipients of such EDSP test orders fail to provide the required information by dropping out of the pesticide market to avoid EDSP testing, EPA may choose to reissue EDSP test orders under SDWA/FFDCA authority if the SDWA criteria are met. EPA would then rely on the policies and procedures established in this document.

V. Discussion of Final SDWA/FFDCA Policies and Procedures and Response to Comments

This document adopts the proposed SDWA/FFDCA policies and procedures published in the **Federal Register** issue of November 17, 2010 (Ref. 5), with minor revisions. The Agency reviewed and considered all of the comments that were received on the proposed SDWA/FFDCA policies and procedures. All of the comments received are available in the docket for this document, and a response-to-comments document (Ref. 6) that summarizes and responds to all of the comments received on the proposed SDWA/FFDCA policies and procedures is also available in the same docket. The Agency specifically requested comments on five topics: Response option to cease manufacture; persistence; catch-up orders and data compensation; orphan chemicals; and electronic notification. The Agency's consideration of such comments is described in this unit and the Agency's response to comments document (Ref. 6).

A. Response Option To Cease Manufacture

EPA sought comment on whether a company could satisfy the EDSP test order simply by committing to stop manufacturing or importing a SDWA chemical, because, in ceasing to manufacture the chemical, the company thereby stops contributing to the presence of the chemical in the source of drinking water and reduces potential exposure. Alternatively, EPA sought comment on whether the company should be required to conduct the EDSP testing nevertheless, on the grounds that the company should not be able to evade responsibility for providing the data necessary to evaluate the existing water contamination to which their manufacturing activities had contributed.

Multiple commenters (the American Petroleum Institute (API), the American Chemistry Council (ACC), Bayer CropScience LP (BCS), Croplife America (CLA), and the Chemical Producers and Distributors Association (CPDA)) agreed with EPA's proposal to allow a EDSP test order recipient for the second list to comply with an EDSP test order by ceasing all manufacturing of the listed chemical, because former manufacturers will not receive any new income from the chemical to pay for the new EDSP testing requirement and language in the statute refers to manufacture and production in the present tense. The San Francisco REACH Team (SFRT) requested that EPA's EDSP test order procedures be revised to include a clear timeline for when the production must cease.

EPA intends to allow a SDWA EDSP test order recipient for the second list to comply with the test order by ceasing all manufacturing, including manufacturing for export only, and importing of the listed chemical. EPA considers this approach to be consistent with the language of the statute and with the decision to accept pesticide cancellation as an acceptable response to an EDSP test order issued under FIFRA. EPA will require recipients to provide a timeline for the cessation of production as part of the explanation

and documentation supporting the claim. Rather than specifying a single timeline, the Agency will take individual circumstances into account, essentially using the same procedure it applies to accepting pesticide cancellations as an acceptable response to an EDSP test order on a pesticide active ingredient.

The American Water Works Association (AWWA) commented that an EDSP test order recipient should not be allowed to respond by ceasing manufacture, observing that this would not absolve them from having contributed to the presence of the chemical in the environment, and that it might persist in the environment.

While the comment has merit, EPA has decided that, in this instance, the equities weigh in favor of allowing companies to satisfy the order by entirely ceasing to manufacture the chemical. As discussed in the draft SDWA/FFDCA policies and procedures (Ref. 5), a number of considerations weigh against requiring manufacturers who choose to cease manufacture of the chemical to nevertheless conduct EDSP testing. Specifically, if an EDSP test order recipient stops manufacturing and importing a chemical, it will ultimately lead to less exposure to the chemical in sources of drinking water. (The decline will happen at different rates, depending on the chemical and whether the chemical is found in surface water or ground water.) Moreover, an order recipient who ceases to manufacture or import a chemical that is subject to EDSP testing will no longer receive any economic benefit from the sale of the chemical with which to defray the cost of testing. This approach will effectively focus the costs on those companies that can best bear the costs of testing. Further, as discussed in this unit, EPA has been unable to develop an effective mechanism for issuing EDSP test orders to past registrants, manufacturers, and importers given the practical, legal, and equitable difficulties of identifying and assessing the contributions of past participants. However, if EPA is unable to obtain information on most chemicals for which there is continued and ongoing significant exposures, EPA may revisit the issue.

B. Persistence

EPA sought comment on whether, and how, to factor chemical persistence into EDSP policies and procedures to account for the contribution associated with past registrants, manufacturers and importers, to the presence of a chemical in a source of drinking water, given that the Agency's policy has been to only issue orders to current registrants, manufacturers, and importers.

Multiple commenters (API, People for the Ethical Treatment of Animals (PETA) and the Physicians Committee for Responsible Medicine (PCRM), ACC, BCS, and CLA and the Endocrine Policy Forum (EPF)) indicated that EPA should not consider a chemical's persistence in the environment when implementing EDSP, noting among other things that ''persistence'' does not appear in the language of the FFDCA and asserting that it is subject to differing interpretations. Commenters observed that the issue of persistence is most likely to arise only for chemicals that have not been manufactured and used by anyone for a significant period of time (*i.e.,* ''legacy chemicals''). Some commenters observed EPA would have to develop a legal and equitable process for identifying those chemicals along with all past manufacturers and importers, many of whom may not have manufactured or imported the chemical for decades.

Two commenters (SFRT and AWWA) advocated that EPA should hold accountable all past registrants, manufacturers, and importers that have contributed to health and environmental impacts from past production activities, even if they are no longer actively manufacturing or importing a particular chemical, because chemicals persist in the environment, the consequences often become apparent decades after the cessation of exposure to a chemical, and companies should share the cost of generating data.

Under SDWA, EPA issues an EDSP test order based upon a finding that a chemical ''may be found in sources of drinking water'' and ''that a substantial population may be exposed.'' While EPA believes that persistence can be defined (persistence is a factor in a variety of EPA's water and toxics programs; *e.g.,* 40 CFR 125.122, 141.24, 711.6, 792.3, 795.70, 796.1050, 798.2250, and 799.5075), SDWA does not explicitly address how to factor in the possible presence of a chemical in a source of drinking water from past manufacturing and importing. And, although, EPA believes that the potential long term impacts of a persistent chemical in sources of drinking water is an important consideration, EPA has not been able to develop an effective mechanism for issuing EDSP test orders to past registrants, manufacturers, and importers given the practical, legal, and equitable difficulties of identifying and assessing the contributions of past participants. Accordingly, EPA does not intend at this time to issue test orders to entities other than current registrants, manufacturers, and importers.

For more information on how EPA addresses commenters' concerns about chemical persistence, see the comment response document for the second list of chemicals (Ref. 7).

C. Catch-Up Orders and Data Compensation

EPA sought comment on ''whether 5 years is the appropriate length of time that the Agency should continue to issue SDWA/FFDCA catch-up orders as a means to ensure equitable sharing of test costs.'' (Five years is the length of time that data compensation is available for test rules issued under TSCA section 4. (See 40 CFR part 791.))

The Methanol Institute argued that SDWA chemicals should be entitled to the same 15-year compensation period as pesticide chemicals, stating there was no logical reason to distinguish between SDWA chemicals and pesticide chemicals since both categories of chemicals are being subjected to the same testing requirements pursuant to the same legislative enactment. The SFRT and the ACC took similar positions. In addition, the 15-year compensation period applies to industrial chemicals used as inerts in pesticides as well.

After carefully considering these comments and the equities involved, EPA has concluded that the most appropriate length of time to issue SDWA/FFDCA catch-up orders is in fact the same 15-year compensation period as for active and inert pesticide chemicals because it will provide a consistent standard across the entire EDSP. Neither SDWA nor the FFDCA authorized EPA to identify manufacturers or importers of SDWA chemicals through mandatory registration provisions, such as those that apply to pesticide registrants. Furthermore, an inconsistency would develop if SDWA chemicals are not entitled to the same 15-year compensation period as the first list of chemicals, pesticides, particularly if they are mandates to the same testing requirements pursuant to the same legislative enactments.

D. Orphan Chemicals

EPA sought comment on the mechanisms available for testing chemicals for which EDSP test orders do not generate the necessary data.

AWWA asserted that water utilities are not manufacturers that can be required to test under FIFRA or TSCA, so disinfection byproducts and arsenic and other naturally occurring chemicals should be considered orphan chemicals

and EPA should screen and test those chemicals itself.

The BCS, PETA, and PCRM interpreted orphan chemicals as those chemicals no longer being produced or imported and reasoned that as environmental exposures to such chemicals would decrease over time, testing of such chemicals should not be required and resources to conduct testing should not be expended either by private parties or by the Agency without a documented rationale for why potentially harmful endocrine effects might be anticipated.

Exposure to chemicals that are no longer being produced or imported may not decrease over time if the chemicals occur naturally or are persistent and bioaccumulative. However, exposure also will not increase from any continuing manmade contribution to environmental loading. As discussed in Unit V.A., EPA has not been able to develop an effective mechanism for issuing EDSP test orders to past registrants, manufacturers, and importers, and has, therefore, concluded not to issue test orders for chemicals that are no longer being manufactured or imported (see Unit V.B.). In addition, without reaching any conclusion with respect to whether water utilities can ever be manufacturers, EPA has not sought to require the testing of disinfection byproducts and arsenic or other naturally occurring chemicals as part of this second list of chemicals, but this issue warrants additional consideration.

E. Electronic Notification

EPA sought comment on whether companies that already have a Central Data Exchange (CDX) account with EPA would prefer to receive an EDSP notification electronically as opposed to notification by means of the U.S. Postal Service, either as a standard procedure or by request, and on mechanisms by which EPA could accurately document the receipt of orders through electronic reporting mechanisms.

API commented that it generally supported electronic reporting but, for EDSP, recommended that electronic notification be optional, since there have been technical problems with electronic reporting in other EPA programs.

Electronic reporting has become the standard mode of operation in business and government and provides overwhelming advantages over paper submissions. The OPPT's premanufacture notice (PMN) and Chemical Data Reporting (CDR) rules (formerly known as the Inventory Update Reporting (IUR) rule) already require use of the Internet to electronically report. OPPT has also proposed additional electronic reporting requirements (Ref. 8).

Electronic reporting requires use of EPA's CDX, the point of entry on the Environmental Information Exchange Network for environmental data submissions to the Agency. Currently, CDX has provided stakeholders with the ability to:

1. Submit data through one centralized point of access and fill out a single electronic form which can be submitted instantaneously instead of mailing multiple paper forms.
2. Receive Agency confirmation when submissions are received.
3. Reduce costs associated with submitting and processing data submissions.
4. Pay fees through *https://www.pay.gov.*
5. Utilize publishing services to share information collected by EPA with other stakeholders.

In an effort to streamline the reporting process, reduce the administrative costs, and maintain consistency with other electronic reporting of information submissions and recordkeeping (Ref. 8), EPA will require EDSP test order information to be submitted electronically. EPA will continue to issue EDSP test orders by U.S. Postal Service for the second list of chemicals.

F. Identification of EDSP Test Order Recipients

Though EPA did not specifically request comment on the identification of EDSP test order recipients, some comments were received.

API agreed with EPA that the CDR rule is the appropriate source for identifying current chemical manufacturers and importers, but recommended that EPA only use the Toxics Release Inventory (TRI) as a last resort, because TRI was less specific. AWWA commented that EPA should clarify what entities the EDSP test orders apply to by defining all terms describing potentially affected entities. The ACC commented that EPA should pay close attention to manufacturing and other activities that contribute to the occurrence of chemicals in drinking water to which a substantial population may be exposed, with an emphasis on the equitable sharing of the cost of testing.

EPA believes it is ''important to identify and issue orders to all significant manufacturers and importers of a listed chemical'' and the Agency intends to rely on the CDR rule, which periodically requires manufacturers and importers to report chemical production information to EPA for chemicals manufactured (including imported) in amounts of 25,000 lb or more at a single site. EPA considers the CDR rule to be a reliable means of identifying manufacturers and importers of non-pesticide, industrial chemicals and believes that the CDR rule generally accounts for most of such chemicals in commerce. EPA intends to use other, publicly available databases, such as, but not limited to, TRI, to identify possible EDSP test order recipients. EPA disagrees that the TRI data are imprecise. TRI data are reported annually and reporters must indicate if they manufacture, including import, a listed chemical as well as more specific information on the manufacture of the chemical. EPA is aware that any given database, including CDR and TRI, is imperfect and has limitations. On the whole, however, EPA believes that CDR and TRI constitute comprehensive and generally reliable databases. Moreover, no commenter disagreed with EPA's assessment or submitted any information to rebut EPA's conclusions.

In addition, EPA believes that relying on these databases effectively addresses the AWWA request that EPA clarify the entities that will be subject to EDSP test orders, and for a definition of all terms describing potentially affected entities. The rules that establish the reporting requirements for these databases (40 CFR parts 372 and 711) already include definitions of all of the necessary terms and should be already familiar to the regulated community. Nonetheless, EPA asked for, and continues to be interested in learning about, any other credible source or method that may be used to identify EDSP test order recipients. In the final analysis, the objective is to identify responsible manufacturers and importers of relevant chemicals, and not to apportion responsibility. EDSP test order recipients may combine in consortia to conduct the required testing on whatever basis they find most suitable.

SFRT asked that EPA ''incorporate a system which takes into account the location of chemical manufacturers and potential disproportionate burden on neighboring communities, in addition to production volume, when issuing test orders'' in order to ''account for the unequal geographic distribution of manufacturing locations of these chemicals and the potential impact of neighboring communities from a chemical's presence in the drinking water among other sources.'' SFRT also recommended that, in order to ''avoid disproportionate burdens and promote equitable responsibility among manufacturers,'' EPA issue EDSP test

order to ''all manufacturers of listed chemicals . . . with the exception of manufacturers using small quantities of the listed chemical (reported in grams instead of lbs.) for research and development purposes only.''

EPA believes it is ''important to identify and issue orders to all significant manufacturers and importers of a listed chemical.'' The Agency intends to rely on the CDR rule, as well as TRI, both of which periodically require manufacturers and importers to report chemical production information to EPA for chemicals manufactured (including imported) in amounts of 25,000 lb or more at a single site. EPA considers the CDR rule to be the most reliable means of identifying ''significant'' manufacturers and importers of non-pesticide, industrial chemicals and believes that the CDR rule generally accounts for most of such chemicals in commerce. It is unclear what the commenter intends by requesting that EPA require self-disclosure in this context, as the only vehicle for requirements relating to EDSP testing in this context will be the EDSP test orders, and EPA can only issue the orders to those manufacturers it can identify. Nonetheless, EPA is interested in finding other existing sources for reliably identifying EDSP test order recipients and will consider issuing EDSP test orders to other significant manufacturers and importers that are identified. EPA, however, does not intend to issue test orders to companies that only manufacture and/or import a chemical in small amounts for research and development or in amounts more appropriately measured in grams rather than thousands of pounds. Issuing EDSP test orders based on the geographic distribution of manufacturing locations and potential impact of chemicals on neighboring communities is, at least, not an express part of the basic requirement that EPA identify and issue EDSP test orders to chemical manufacturers and importers and would add another complex and potentially burdensome requirement to the issuance of EDSP test orders that appears unnecessary and unlikely to achieve the primary goal of the program: To obtain the necessary data to evaluate the endocrine potential of pesticide chemicals and drinking water contaminants.

G. Other Topics

1. *Cost sharing.* ACC, CLA, EPF, and CPDA stated that EPA had developed a workable data compensation and cost sharing plan and agreed with EPA's decision to issue catch-up orders to require cost sharing by manufacturers and importers who enter the market after initial orders are issued (but suggested that such orders be issued for 10 instead of 5 years), but recommended that EPA develop new procedures in the form of explicit, legally enforceable compensation rights to ensure fair and equitable sharing of test costs.

Section 408(p) of FFDCA only authorizes EPA to create procedures that operate within the confines of existing statutory authority and to develop procedures to facilitate joint data generation. EPA, however, is authorized to determine what actions comply with a FFDCA section 408(p) test order and intends to use this discretion to create strong incentives for companies to jointly volunteer to develop EDSP test data under the circumstances enumerated in Unit VI.G.

2. *Minimizing duplicative testing.* PETA and the PRCM commented that EPA should mandate, and create incentives to form testing consortia.

EPA does not have the authority to compel EDSP test order recipients to join testing consortia to minimize testing, but may develop procedures to facilitate joint data generation. In particular, EPA has the discretion to determine what constitutes compliance with an EDSP test order and can exercise that discretion to allow cost sharing and the joint electronic submission of data by EDSP test order recipients, in appropriate circumstances, to reduce costs and duplicative testing. EPA intends to continue to list other manufacturers and contact information in each EDSP test order as well as providing such information on the Agency's EDSP Web site.

3. *CBI.* SFRT commented that EPA should strictly disallow CBI claims. The ACC, CLA, and EPF commented that FFDCA authorized, and EPA should provide, EDSP-specific CBI protection, which was critical to protect industry's legitimate intellectual property interests.

FFDCA does not authorize EPA to either create new rights or to modify existing rights to confidentiality. Rather, FFDCA only directs EPA to apply the confidentiality provisions in existing statutory authorities: FIFRA, the Freedom of Information Act (FOIA), and the Trade Secret Act (TSA), as applicable. SDWA, in particular, only authorizes EPA to apply CBI protection under the TSA. Data submitted to EPA in response to an order issued under SDWA/FFDCA for non-pesticide chemicals, for example, would only have the protections provided under FOIA and TSA.

4. *Adverse effects reporting.* ACC commented that EPA has not, but should, give clear guidance on the significance of positive Tier 1 test results for TSCA section 8(e) and FIFRA section 6(a)(2) reporting purposes.

EPA made a considered decision not to reinterpret the existing requirements for Tier 1 data, nor to otherwise take steps to amend the existing requirements. Rather, EPA referenced the existing regulatory provisions of 40 CFR part 159 and existing interpretations of TSCA section 8(e). In general, EPA does not believe that data from a single Tier 1 assay that provides some evidence that a chemical may have the potential to interact with the endocrine system necessarily meets the standard for information that must be reported in accordance with FIFRA section 6(a)(2) or TSCA section 8(e) in all cases. In addition, EPA believes that it has not yet accumulated adequate experience with the Tier 1 results to be able to provide general guidance as to the significance of positive results from Tier 1 assays for purposes of the reporting requirements under FIFRA section 6(a)(2) or TSCA section 8(e). Under existing procedures, the determination to report is to be made by the company in the first instance, on a case-by-case basis, taking into account all circumstances, and EPA is not aware of any reason to change that with respect to EDSP data. Accordingly, to the extent that Tier 1 information meets the standards laid out in EPA's regulations (40 CFR part 159), or falls within the categories described in EPA's past statements regarding TSCA section 8(e) (Ref. 9), that information should continue to be reported, consistent with those requirements.

Any information previously submitted to EPA under FIFRA section 6(a)(2), TSCA section 8(c), or TSCA section 8(e) need not be resubmitted to EPA in response to an EDSP test order, because EPA would already have the data.

5. *Public availability of information.* SFRT commented that the EDSP test data on SDWA chemicals should be made publicly available on EPA's Web site.

EPA intends to make all non-confidential EDSP data publicly available on the Agency's EDSP Web site. However, TSA and FOIA may apply and provide some protections against disclosure and it may not be possible to publicly post all available data. Nonetheless, EPA expects that confidential data will be limited, and health and safety data for chemicals on the non-confidential TSCA Chemical Substance Inventory (TSCA Inventory)

of existing chemicals, which all of the SDWA chemicals are, may not be entitled to confidential treatment.

6. *OSRI and Weight-of-Evidence (WoE).* ACC, CLA, EPF, and CPDA commented that EPA's offer to accept OSRI in lieu of EDSP test data was justified, but that EPA had not clearly articulated a basis for evaluating OSRI. ACC, CLA, EPF, and CPDA also commented that EPA needed to develop meaningful WoE guidelines for assessing voluminous Tier 1 EDSP data to determine whether a chemical interacts with the endocrine system and publish peer reviewed guidance for conducting WoE evaluations.

EPA issued guidance on OSRI for Tier 1 test orders in 2009 (Ref. 10) and on WoE approach evaluating Tier 1 screening results in 2011 (Ref. 11).

7. *Communications: Consistent use of language and definitions.* API, ACC, CLA, and EPF commented that, given the sensitivity of the issue of endocrine disruption, EPA should be careful to use clear and accurate definitions for all important EDSP terms and to communicate clearly, accurately, and consistently to the public and within the Agency in order to avoid confusion and misunderstanding.

EPA generally agrees with these comments and has made every effort to be as clear, concise, and unambiguous as possible. EPA has, for example, generally adhered to widely accepted definitions, such as the World Health Organization's (WHO) definition of ''endocrine disruptor'' as ''an exogenous substance or mixture that alters function(s) of the endocrine system and consequently causes adverse health effects in an intact organism'' (Ref. 12). EPA has also repeatedly cautioned that the public should not presume that the listing of a chemical or substance indicates in any way that EPA currently suspects that such chemical or substance interferes with the endocrine systems of humans or other species. EPA plans on maintaining these communications in future EDSP documents. See also EPA's response to comments documents (Refs. 7 and 13).

8. *Schedule.* API, SFRT, ACC, BCS, CLA, EPF, and CPDA commented that EPA should not issue EDSP orders for the second list of chemicals or for Tier 2 testing until the data from the first list had been evaluated and the Tier 1 assays had been examined in light of those data.

The Agency intends to complete review of the Tier 1 data from the EDSP test orders issued for the first list of EDSP chemicals before issuing Tier 1 test orders for the second list of EDSP chemicals. EPA intends to continue to rely on the available validated methods and to follow the recommendations in the 1999 report from the joint meeting of the Agency's Science Advisory Board (SAB) and FIFRA Scientific Advisory Panel (SAP) (Ref. 14). The steps for this process are described in the EDSP Comprehensive Management Plan issued in 2012 (Ref. 15). With these recommendations, the Agency improves the validating screening and testing methods to develop complete information on chemicals being tested. In continuing with this process of developing efficiency, the Agency does not intend to release any finalized EDSP Tier 1 WoE decisions until the EDSP Tier 2 protocols are available.

9. *Enforcement.* SFRT commented that EPA should enact a system of graduated penalties for noncompliance with testing requirements based on the length of delay in complying with requirements.

EPA agrees that graduated penalties are generally appropriate, and has generally exercised its discretion consistent with that policy. For non-pesticides, failure to comply with an EDSP order carries the same civil and criminal penalties set out in TSCA section 16, under which each new day of continued noncompliance is another violation, so graduated penalties based on the length of delay are already built into the law. For pesticide chemicals, the FFDCA imposes more specific requirements with respect to the penalty for non-compliance, although they are generally consistent with the concept that penalties should be tied to the period of non-compliance. FFDCA section 408(p)(5)(C) requires the suspension of the pesticide registration for the period of non-compliance, and specifies that the suspension shall be terminated upon a determination that the registrant is no longer out of compliance.

10. *Other comments.* EPA also received comments on topics that do not address aspects of the policies and procedures for issuing EDSP test orders, *e.g.,* the use of SDWA authority to issue orders, the basis of SDWA chemical selection, and the second list of chemicals. The comments related to SDWA and the second list of chemicals are addressed in EPA's response to comments document prepared for the second list of chemicals (Ref. 7).

VI. Final Procedures for EDSP Tier 1 Screening Pursuant to SDWA

For purposes of discussing the EDSP policies and procedures in this document, SDWA chemicals can be described as either currently registered PAIs (SDWA PAIs) or ''Other SDWA Chemicals'' (including inert ingredients in currently registered pesticide products). EPA generally intends to issue FIFRA/FFDCA orders to manufacturers and registrants of PAIs, but would retain the discretion to issue an SDWA/FFDCA test order to any chemical that meets the statutory criteria in SDWA section 1457. Consequently, for any pesticide chemical that also has non-pesticidal uses, in the event that no FIFRA/FFDCA test order recipient generates the required data because all order recipients opt out of the pesticide market, EPA may decide to issue EDSP testing orders based on the SDWA authority in order to obtain the data. In such instances, the policies and procedures outlined in this document would be applicable.

By contrast, for SDWA chemicals that are not PAIs, (*i.e.,* ''Other SDWA Chemicals''), EPA generally intends to rely on SDWA section 1457 and/or FFDCA section 408(p)(5) to issue EDSP test orders. The Other SDWA Chemicals are very similar to the non-food use inert ingredients discussed in the FIFRA/FFDCA policies and procedures (Ref. 1), and the similarities are reflected in the policies that EPA has adopted in this document. Unit VI. describes the policies and procedures that relate to EDSP test orders issued under SDWA/FFDCA authority.

A. Who would receive EDSP test orders on SDWA chemicals?

EPA believes it is important to identify and issue orders to all significant manufacturers and importers of a listed chemical. Under FFDCA section 408(p)(5)(A), EPA ''shall issue'' EDSP test orders ''to a registrant of a substance for which testing is required . . . or to a person who manufactures or imports a substance for which testing is required . . .'' (21 U.S.C. 346(a)(p)(5)(A). The process EPA generally intends to use to issue EDSP test orders for SDWA chemicals depends on whether the chemical is a SDWA PAI or an Other SDWA Chemical. A chart depicting the process for issuing EDSP test orders on SDWA chemicals is included in the docket (Ref. 16).

As noted, the Agency generally intends to issue orders under FIFRA/FFDCA for SDWA PAIs, and to rely on the FIFRA/FFDCA policies and procedures (Ref. 1). As described in that document, EPA intends to use internal databases—principally the Office of Pesticide Program's Information Network (OPPIN)—to identify technical registrants with a current pesticide registration containing a SDWA

chemical as the active ingredient, and anticipates issuing a FIFRA/FFDCA test order to all identified technical registrants.

For Other SDWA Chemicals, EPA generally intends to rely on information reported to the Agency under the TSCA CDR rule (Ref. 17) and TRI to identify the initial SDWA/FFDCA test order recipients. The CDR rule and TRI require manufacturers and importers of certain chemicals included on the TSCA Inventory to report site and manufacturing information for chemicals manufactured (including imported) in amounts of 25,000 lb. or more at a single site, or, for TRI, other lower thresholds as specified. The Agency believes that this information is an appropriate source for identifying EDSP test order recipients. It has been EPA's experience that relying on companies that have reported to the CDR is the most reliable mechanism for identifying manufacturers and importers of (non-pesticide) industrial chemicals. Such manufacturers and importers are required, by regulation, to report under the CDR rule. Companies that report under the CDR rule generally account for most of a chemical in commerce (therefore, in many instances, these companies can be expected to account for most of a chemical when it is found in drinking water), which is the basis for listing a chemical under SDWA authority (see Unit II.B.). As relatively large manufacturers and importers, EPA also believes that companies reporting under CDR comprise the majority of the volume associated with the chemical; these companies are more likely to be able to afford the cost of EDSP testing than companies manufacturing volumes below the CDR reporting threshold. EPA believes that, in general, these manufacturers are analogous to the technical registrants, who received orders in the first round of EDSP screening. Finally, using the CDR information to identify order recipients will facilitate joint data development, as reporters for these chemicals are generally publicly known and not numerous.

If there are no companies reporting in response to the CDR rule for a given chemical, EPA intends to use other publicly available databases, such as the TRI, to identify other major EDSP test order recipients. For Other SDWA Chemicals that are regulated or tracked by another agency (*e.g.,* pharmaceuticals by the Food and Drug Administration), EPA may also consult with that agency as appropriate to identify main manufacturers and importers. In addition to using CDR, TRI, and other Federal agency databases, EPA also generally intends to issue orders to manufacturers and importers who are subsequently identified as such. The Agency will follow up on any new information it receives to this effect and issue orders accordingly. EPA, however, does not generally intend at this time to issue orders to companies that manufacture or import a chemical for research and development purposes only, or who otherwise manufacture or import quantities of a chemical that are more appropriately measured in grams (*e.g.,* as impurities, contaminants, or byproducts, which are not expected to be released into the environment in significant amounts).

The Agency intends to issue catch-up orders to manufacturers or importers who begin to manufacture or import an EDSP SDWA chemical within 15 years of the issuance of a SDWA/FFDCA test order. The EDSP SDWA chemical catch-up order process will be similar to the catch-up order process described in the FIFRA/FFDCA policies and procedures (Ref. 1), except that EPA generally expects that the source of information for identifying such manufacturers will primarily come from the public, because there is no industrial chemical registration process comparable to the pesticide registration process that would provide a mechanism for EPA to independently identify such entities. A recipient of such catch-up orders would have the same options for compliance as an initial order recipient: independently generate the data or participate in the cost sharing by making a good faith offer to participate, if it wishes to rely on data developed or submitted by another recipient or consortium to satisfy its EDSP test order obligation.

If, at the end of this process, all EDSP test order recipients have ceased to manufacture a SDWA chemical without submitting the required data, the Agency generally intends to treat the SDWA chemical as an ''orphan.''

B. How will recipients of orders on SDWA chemicals be notified?

Order recipients will receive an EDSP test order in one of two ways: By registered mail or electronically. In addition to the EDSP test order, EPA will send each recipient a packet that contains the instructions, background materials, and sample forms needed to comply electronically with the EDSP test order via CDX or will provide directions as to the location of such materials in an electronic format.

C. How will the public know who has received a test order on a SDWA chemical or who has supplied data?

EPA intends to provide the list of all EDSP test order recipients on the Agency's EDSP Web site (Ref. 4). EPA invites the submission of information (with proper substantiation) identifying additional entities—including entities who manufacture for export only—who should have received a test order. Commenters could either identify themselves or another person as additional candidates for the receipt of an EDSP test order.

D. How will the Agency minimize duplicative testing?

As described in greater detail in this unit, EPA generally intends to continue to rely on its existing procedures to minimize duplicative EDSP testing for SDWA chemicals, including continuing to allow companies to voluntarily develop data jointly, and, as described in Unit VI.G., continuing to apply the policies that facilitate joint data development, as well as to accept OSRI in satisfaction of the order.

In addition, the Agency intends to provide the status of the EDSP test orders, including recipients' responses, on the Agency's EDSP Web site so that both order recipients and the public can determine the status of responses (see for example Ref. 18). EPA will make such information available to enable test order recipients to identify and join other order recipients to develop the data in response to the order, thereby helping to achieve EPA's goals of minimizing duplicative testing and promoting fair and equitable sharing of EDSP test costs.

E. What are the potential responses to test orders on SDWA chemicals?

The options for responding to a SDWA/FFDCA test order are similar to those established in the FIFRA/FFDCA policies and procedures (Ref. 1), except that the option of exiting the pesticide market will not be available. The basis for a SDWA/FFDCA order is that a chemical may be found in sources of drinking water to which a substantial population may be exposed. Exiting any given market (*e.g.,* the pesticide market) is not sufficient if the SDWA chemical is manufactured or imported for other uses because the chemical may still be found in sources of drinking water. If sufficient data on a SDWA chemical that is a pesticide is not generated in response to a FIFRA/FFDCA order (*e.g.,* all FIFRA/FFDCA order recipients exit the pesticide market), EPA may issue a follow-up SDWA/FFDCA order for such

chemicals if they have non-pesticide uses.

EDSP test order recipients provide their initial responses electronically referencing the options on a sample Initial Response Form for Individual Order Recipients (Initial Response Form) (Ref. 19). Response options that EPA anticipates including in SDWA/FFDCA test orders are as follows:

Option 1: *Recipient indicates that it intends to generate data.* If the EDSP test order recipient decides to generate new data for each test specified in the order, the recipient would then comply with the procedures prescribed in the EDSP test order. In general, this option would be identical to the option discussed in the FIFRA/FFDCA policies and procedures (Ref. 1). EPA has not identified any changes that would be necessary to accommodate SDWA chemicals. Data generated and submitted would need to comply with the existing requirements for Good Laboratory Practices (GLP), as applicable. GLPs have been set out both in FIFRA for pesticides in 40 CFR part 160 and for TSCA chemicals in 40 CFR part 792. EDSP test order recipients would need to follow any appropriate GLPs, protocol requirements identified in the EDSP test order, and procedures described in EDSP test orders for submitting the data.

Option 2: *Recipient indicates that it is submitting or citing existing data or OSRI.* The recipient would choose this option to indicate that it is submitting or citing existing data (including data previously submitted to the Agency) that it believes is relevant to one or more of the requests in the test order. The recipient's initial response would include either the data or a reference to the data for each assay specified in the order. In submitting or citing existing data, the order recipient should follow, as appropriate, relevant format guidelines described in the EDSP test order and provide an explanation of the relevance of the data to the order, including, where appropriate, a cogent and complete rationale for why it believes the information is or is not sufficient to satisfy part or all of the Tier 1 test order.

Data compensation procedures may apply to data previously submitted to the Agency. If the data cited or submitted are from a study that was not conducted exactly as specified in the protocols referenced in the EDSP test order or in accordance with accepted scientific methodology or protocol, including but not limited to those presented in EPA's harmonized test guideline compendium (Ref. 20), the recipient would also identify the deviations from the applicable protocol(s), along with an explanation for the deviations, including an explanation as to why, notwithstanding the deviations, the protocol used for developing the cited or submitted data should still be considered as providing an accepted scientific methodology or protocol, and any other information relevant to a decision to accept the data as satisfaction of the order.

EPA would review any existing relevant information submitted or cited (including OSRI) to determine whether the information is acceptable (*e.g.,* the study was not rejected by the Agency for any reason related to completeness or quality) and satisfies the order. Decisions about whether the information satisfies part or all of the Tier 1 test order will be based on WoE from all relevant information available. The Agency would notify the recipient of its determination.

If the Agency determines that the information cited or submitted as part of the initial response received from an order recipient satisfies the Tier 1 test order the electronic Initial Response Form is the only response required.

If, however, EPA determines that the information cited or submitted as part of the initial response is insufficient to satisfy the Tier 1 test order, in whole or in part, the recipient would still need to satisfy any order requirements EPA had determined had not been met. EPA intends to use a WoE approach as described in the EDSP WoE guidance document (Ref. 11) which takes into account data from the Tier 1 assays and any other scientifically relevant information available, to determine whether the chemical has the potential to interact with the endocrine system. Chemicals that go through Tier 1 screening and are found to have the potential to interact with the estrogen, androgen, or thyroid hormone systems will proceed to the next stage of the EDSP where EPA will determine which, if any, of the Tier 2 tests are necessary.

Option 3: *Recipient indicates that it intends to enter (or offer to enter) into an agreement to form a consortium to provide the data.* The recipient may choose to join or form a consortium to share the cost of producing the required data. All participants of the consortium must submit their own electronic Initial Response Form for Individual Order Recipients, providing the name of the party who will be submitting the data on the recipient's behalf.

Under this option, the designated lead for the consortium would complete their Initial Responses electronically (Consortium Response Form) (Ref. 21) for the consortium to provide the primary contact for the consortium, the list of participants, and an indication of the consortium's planned response for each assay, along with documentation of its formation (such as a copy of the joint agreement or a written statement by all the parties that an agreement exists). The joint agreement to produce the data would not need to specify all of the terms of the final arrangement between the parties or the mechanism to resolve the terms. The designated lead for the consortium would be responsible for submitting the consortium's initial response and accompanying information to EPA by the due date for the consortium's response, consistent with any mailing instructions indicated in the EDSP test order.

Once the consortium submits the data electronically and EPA has completed its initial review, EPA would notify the contact of the consortium indicating whether the order has been satisfied. If satisfied, such an action would satisfy EDSP test order obligations for each of the consortium participants.

If the consortium fails to submit the data or meet the requirements of the order in a timely and adequate manner, each recipient would be subject to penalties of up to $37,500 per day, unless the recipient were to commit to submit, and then did submit, the required data by the dates originally specified in the order. The Agency has typically granted very few, if any, time extensions for the submission of EDSP data.

The Agency intends to provide to every EDSP test order recipient a list of the other manufacturers and/or importers (to the extent permitted by confidentiality requirements) that have also received an EDSP order for the specified SDWA chemical. This list would be intended to help order recipients identify other companies with whom they could form agreements to develop data jointly, or otherwise collaborate on a response to satisfy the requirements in the order. If the identity of a company subject to the SDWA/FFDCA test order is claimed as CBI, EPA intends to offer the company an opportunity to identify an agent who would act on their behalf in all matters relating to the EDSP program. For any company that chooses to designate an agent, the Agency intends to make the name of the agent (instead of the company) public by including it on the list of recipients of SDWA/FFDCA test orders. This name use would be similar to the process used for FIFRA/FFDCA test orders and presented in the FIFRA/FFDCA policies and procedures (Ref. 1). If the identity of a company subject to the EDSP test order is claimed as CBI,

and yet the company does not name an agent, that company's ability to obtain data compensation from other parties (or rely on compensable data submitted by other parties) would likely be affected. EPA intends to make available the list of EDSP test order recipients on the Agency's EDSP Web site (Ref. 4). EPA intends to update the list with subsequent publication(s) and posting(s) as appropriate. For example, the Agency intends to post the status of the EDSP test orders, including the recipient's response, on the Agency's EDSP Web site so that both EDSP test order recipients and the public can check on the status of responses to the EDSP test orders. This public listing is intended to also facilitate the formation of consortia to develop data jointly since recipients would know all other entities required to generate the same data.

Option 4: *Recipient claims that it is not subject to the EDSP test order.* Under this option, a recipient would claim that it is not subject to the order because it does not manufacture or import the chemical identified for EDSP testing, or because it believes the order was otherwise erroneously sent. This option would be essentially the same as the option discussed in the original policies and procedures for manufacturers of inert ingredients. EPA has not identified any issues unique to SDWA chemicals that would warrant a change in policy on this point. An explanation of the basis for the claim, along with appropriate information to allow the Agency to substantiate the claim, would accompany the Initial Response. The Agency intends to evaluate the claim and respond to any request within 90 days of receipt. If EPA were unable to verify the claim, the original requirements and deadlines in the order would be expected to remain. If EPA were able to verify the claim, such a response would satisfy the order and no further response would be necessary.

Option 5: *Recipient intends to discontinue the manufacture or import of the chemical.* Under this option, the recipient would indicate it has or is in the process of discontinuing all manufacture and import of the chemical. As noted in Unit V.A., in order to take advantage of this option, a recipient would need to also cease manufacture of the chemical, including for the purposes of export. In addition, the recipient would be required to provide an electronic initial response via CDX that includes a verifiable explanation and documentation supporting its claim. If EPA verifies the claim, the electronic Initial Response Form is all that would be required to satisfy the EDSP test order. If EPA could not verify the claim, the recipient's obligation to comply with the EDSP test order would remain.

Unlike the FIFRA/FFDCA policies and procedures (Ref. 1), which enable a manufacturer or importer of a pesticide inert ingredient to comply with the FIFRA/FFDCA test order by discontinuing the sale of the chemical into the pesticide market, SDWA/FFDCA test orders cannot be satisfied in this manner. A chemical manufacturer or importer that receives a SDWA/FFDCA test order would need to cease all manufacture and import of that chemical. Simply exiting the pesticide market would not address the chemical's potential presence in ''sources of drinking water to which a substantial population may be exposed'' and it would therefore be inappropriate to allow companies to satisfy a test order with such a response.

Option 6: *Recipient responds according to one of three other response options.* As part of the Initial Response, a recipient may also ask EPA to reconsider some or all of the EDSP testing specified in the order if:

a. The recipient can demonstrate (supported by appropriate data) that the chemical is an endocrine disruptor and that additional EDSP Tier 1 screening is unnecessary.

b. The recipient can demonstrate (supported by appropriate data) that the chemical meets the standard for an exemption under FFDCA section 408(p)(4) (*i.e.,* ''that the substance is not anticipated to produce any effect in humans similar to an effect produced by a naturally occurring estrogen'').

c. The chemical was used by EPA as a ''positive control'' to validate one or more of the screening assays. In the last data collection, chemicals used by EPA as a ''positive control'' to validate one or more of the screening assays were only required to submit the assays for which the chemical did not serve as a positive control (*e.g.,* if the chemical served as a positive control in the validation of two assays, the EDSP test order recipient would not be required to generate additional data for those two assays). EPA generally expects that it would continue this policy.

For more information on the response options discussed in this unit, see the FIFRA/FFDCA policies and procedures (Ref. 1).

The Agency intends to make a determination on any claim and respond to the recipient within 90 days of receipt. If EPA cannot verify the claim, the original requirements and deadlines in the order would remain. If EPA were to verify the claim, EPA would consider the response to fully satisfy the order and no further response would be required.

F. How to submit order responses and data electronically?

EPA has developed an electronic submission system for data submitted in response to SDWA/FFDCA test orders following the general process established for TSCA Section 5 Premanufacture Notices and for other TSCA reporting, including TSCA Section 8 CDR. The EDSP order electronic reporting system will allow order recipients to use the Agency's CDX to respond to an order and to submit test data via the Internet. See *http://www.epa.gov/cdx* for additional information about CDX (Ref. 22). If not already registered with CDX, recipients will need to complete a simple registration process in order to use this system for electronic submissions of EDSP test order data, thereby establishing a secure log-on to CDX. Specific requirements associated with these EDSP test orders will be provided directly to the order recipients, and are expected to include:

- Registration with CDX, resulting in the establishment of an electronic signature usable for electronically submitting EDSP test order responses.
- Access to a web-based response form, including the ability to attach PDF files.
- Encrypted submission to EPA via CDX.

Each EDSP test order would contain specific, updated information regarding the most current process to use to respond to the EDSP test order.

G. How will EPA facilitate joint data development and cost sharing for SDWA chemicals?

As described in the FIFRA/FFDCA policies and procedures (Ref. 1), the Agency believes that FFDCA section 408(p)(5) does not provide the authority to create requirements for joint data development, including a requirement to use binding arbitration to resolve disputes, as does FIFRA section 3. In EPA's view, FFDCA section 408(p)(5)(B) merely establishes a qualified direction that the Agency ''[t]o the extent practicable . . . minimize duplicative testing . . .'' This, standing alone, does not create new authority to compel companies to use arbitration to resolve disputes arising from an effort to develop data jointly, nor does it even authorize EPA to impose a requirement for joint data development. Rather, EPA believes that this provision directs the Agency to create procedures that operate within the confines of existing

statutory authorities. While FFDCA section 408(p) does not allow EPA to impose requirements identical to those authorized by FIFRA section 3, EPA has the authority under FFDCA section 408(p) to develop Agency procedures that would facilitate joint data generation and electronic submission. Specifically, the Agency has discretion to determine what actions constitute compliance with a FFDCA section 408(p) test order, and EPA intends to apply this discretion in a manner that creates strong incentives for companies to voluntarily develop data jointly. Section 408(p) of FFDCA confers adequate discretion for EPA to consider whether a recipient has fulfilled its obligation to provide data when the recipient individually or jointly submits results from the required studies, or when EPA judges that it would be equitable to allow the recipient to rely on, or cite, results of studies submitted by another person.

At the same time, however, each recipient of an order under FFDCA section 408(p) has a separate obligation to satisfy the Tier 1 test order that it received. EPA thinks that FFDCA section 408(p) confers adequate discretion to consider that a recipient has fulfilled its obligation to provide data when:

- The recipient individually or jointly submits results from the required assays.
- EPA judges that it would be equitable to allow the recipient to rely on, or cite, results of studies submitted by another person.

The determination of whether it would be equitable to allow citation to another recipient's data will be necessarily based on a case-by-case review of the specifics of the individual circumstances. However, the Agency believes that it would generally be equitable to allow a recipient of a FFDCA section 408(p) test order to rely on the results of studies submitted by another person where:

- The data generator has given permission to the recipient to cite the results, or
- Within a reasonable period after receiving the FFDCA section 408(p) test order, the recipient has made an offer to commence negotiations regarding the amount and terms of paying a reasonable share of the cost of testing; has included an offer to resolve any dispute over the recipients' shares of the test costs by submitting the dispute to a neutral third party with authority to bind the parties (*e.g.,* through binding arbitration); and, if arbitration is requested, participates in the arbitration proceeding and complies with the terms of any arbitration award.

The Agency believes this approach to minimizing duplicative EDSP testing, which parallels that used under FIFRA section 3(c)(2)(B), provides all recipients of FFDCA section 408(p) test orders adequate incentives to develop data jointly. In the first instance, where the data generator had granted permission for another party to cite its data, the equities are clear, and EPA has no reason for refusing to allow it. In the second instance, where the data generator received an offer to commence negotiations regarding the amount and terms of compensation and to go to a neutral decisionmaker with authority to bind the parties failing successful negotiations, EPA believes that the company has demonstrated a good faith effort to develop data jointly, and consequently would typically consider that the order recipient had complied with the order. Based on EPA's experience under FIFRA, there would be little or no reason for a data generator to decline such an offer. Moreover, if EPA did not adopt such an approach, the end result would effectively confer the sort of ''exclusive use'' property rights established under FIFRA section 3(c)(1)(F), on a broad category of data, and EPA does not believe that FFDCA section 408(p)(5) creates such rights, or provides EPA with the authority to create such rights. These conditions would also apply to recipients of any ''catch-up'' FFDCA § 408(p) orders, who enter the market after the data have been submitted.

H. What procedures can EPA apply for handling CBI for SDWA chemicals?

As stated in the FIFRA/FFDCA policies and procedures (Ref. 1), FFDCA does not authorize EPA to either create new rights or to modify existing rights to confidentiality, but directs the Agency to create procedures that operate within the existing confines of FIFRA, FOIA, and TSA. SDWA has no provisions that authorize EPA to extend protections for handling CBI beyond those established by TSA. Thus data submitted in response to SDWA/FFDCA orders would only be subject to the protections under FOIA and TSA, with the notable exception of data generated on pesticide chemicals. Manufacturers of a food use inert ingredient that is also identified as a SDWA chemical should generally expect to receive SDWA/FFDCA test orders; however, all CBI and data compensation provisions established in FIFRA would still apply. In addition, under certain circumstances, data generated on non-food use inert ingredients may be entitled to FIFRA CBI and data compensation protections. Test order recipients for the food use-inert, or a pesticide with a food tolerance or exemption, should consult the FIFRA/FFDCA policies and procedures (Ref. 1) for a more detailed explanation of the FIFRA provisions that apply.

The identities of chemicals on the non-confidential portion TSCA Inventory (*i.e.,* the chemical identity of the chemical substance is publicly known), contained in health and safety data subject to TSCA may not be entitled to confidential treatment (Ref. 23). In addition, because the chemical identity is public for all SDWA chemicals on the second EDSP chemical list, EPA expects that there would be no need to claim submitted information as confidential. EPA also believes that it would be particularly difficult to substantiate such a claim, given that the information would already be publicly available.

As described in Unit V.E. under Option 3, when the identity of a company subject to the SDWA/FFDCA test order is claimed as CBI, EPA intends to offer the company an opportunity to identify an agent who would act on their behalf in all matters relating to EDSP. For any company that chooses to designate an agent, the Agency intends to make the name of the agent (instead of the company) public by including it on the list of recipients of SDWA/FFDCA test orders.

I. What is the process for contesting a test order or consequences for failure to respond or comply with a test order?

EPA generally intends to rely on the existing interpretations and policies relating to pre-enforcement challenges to and enforcement of a test order. Order recipients are encouraged to consult the FIFRA/FFDCA policies and procedures (Ref. 1) for further details on these policies.

J. What is the informal administrative review procedure?

EPA generally intends to continue to include the informal administrative review provisions in SDWA/FFDCA test orders by which recipients could raise any questions or challenges concerning the issuance of the order, that were included in the orders issued for the first list of chemicals. As explained in the FIFRA/FFDCA policies and procedures (Ref. 1), because the mere filing of the objection (or indeed, the filing of a judicial challenge) would not extend the deadline for submission of the studies, in order for this process to be completed in a timely fashion, EPA expects order recipients who file a

challenge to present their objections with sufficient specificity and detail to allow the Agency to effectively evaluate the issue(s) presented. EPA would review the issues presented and respond within a reasonable amount of time. The Agency understands that it will need to respond to such objections within sufficient time for the order recipient to comply with the orders, or to pursue judicial review.

K. What are the adverse effects reporting requirements?

EPA is not modifying any of its existing reporting requirements or any of the policies with respect to how the adverse effects reporting requirements relate to EDSP data.

Adverse effects reporting requirements for pesticide chemicals in registered products are established in FIFRA section 6(a)(2) and can be found in the FIFRA/FFDCA policies and procedures (Ref. 1). In addition to requirements under FIFRA, TSCA section 8(c) allows EPA to request that companies record, retain and/or report ''allegation of significant adverse reactions'' to a chemical substance or mixture that the company produces, imports, processes or distributes (15 U.S.C. 2607(c)). Additional information can be found in 40 CFR part 717. Chemical substance is defined in TSCA (15 U.S.C. 2602(2)).

Under TSCA section 8(e), U.S. chemical manufacturers, importers, processors, and distributors are required to notify EPA within 30 days of new unpublished information regarding their chemical if the information may lead to a conclusion that the chemical poses substantial risk to human health or the environment (15 U.S.C. 2607(e)). ''Substantial risk'' information is information that offers reasonable support for a conclusion that the subject chemical substance or mixture poses a substantial risk of injury to health or the environment. The information need not, and typically does not, establish conclusively that a substantial risk exists.

Any information that has been previously submitted under FIFRA section 6(a)(2), TSCA section 8(c), or TSCA section 8(e), to the extent the EDSP test order recipient believes that it is responsive to the EDSP test order, need not be resubmitted to satisfy the FFDCA section 408(p) test orders. The EDSP test order recipient need only cite the previously submitted information in lieu of resubmission.

VII. Statutory and Executive Order Reviews

A. Regulatory Planning and Review

Under Executive Order 12866, entitled ''Regulatory Planning and Review'' (58 FR 51735, October 4, 1993), this policy statement is not considered to be a ''significant guidance document'' under the terms of the Executive Order because this policy statement does not raise novel legacy or policy issues arising out of legal mandates, the President's priorities, or the principles set forth in the Executive Order. As indicated in this unit, this policy statement only makes a few modifications that are necessary to address procedural differences that apply to SDWA chemicals.

B. Paperwork Reduction Act (PRA)

The information collection requirements described in this document have been submitted to OMB for review under PRA, 44 U.S.C. 3501 *et seq.* Elsewhere in this **Federal Register** issue is a separate document prepared by EPA that announces the availability of the ICR document. The docket ID number for this ICR submission is EPA–HQ–OPPT–2013–0275. An Agency may not concur or sponsor, and a person is not required to respond to a collection of information unless it displays a currently valid OMB control number. The OMB control numbers are displayed either by publication in the **Federal Register** or by other appropriate means, such as on the related collection instrument or form, if applicable. The display of OMB control numbers in certain EPA regulations is consolidated in 40 CFR part 9. As a new ICR, the Agency does not yet have an OMB control number for this information collection activity. Once assigned, EPA will announce the OMB control number for this information collection in the **Federal Register**, and will add it to any related collection instruments or forms used. Burden is defined in 5 CFR 1320.3(b).

VIII. References

As indicated under **ADDRESSES**, a docket has been established for this notice under docket ID number EPA–HQ–OPPT–2007–1080. The following is a listing of the documents that are specifically referenced in this action. The docket includes these documents and other information considered by EPA, including documents that are referenced within the documents that are included in the docket, even if the referenced document is not physically located in the docket. For assistance in locating these other documents, please consult the technical person listed under **FOR FURTHER INFORMATION CONTACT**.

1. EPA. Endocrine Disruptor Screening Program; Policies and Procedures for Initial Screening; Notice. **Federal Register** (74 FR 17560, April 15, 2009) (FRL–8399–9).
2. EPA. Order Template: ''FFDCA § 408(p) Order Template for SDWA § 1457 Chemicals.'' April 15, 2013. Available in Attachment C(3) to the ICR in Docket ID Number EPA–HQ–OPPT–2013–0275.
3. U.S. Congress. House Resolution 2996, H. Rept. 111–180.
4. EPA. Endocrine Disruptor Screening Program Web site at *http://www.epa.gov/endo.*
5. EPA. Endocrine Disruptor Screening Program; Draft Policies and Procedures for Screening Safe Drinking Water Act Chemicals; Notice. **Federal Register** (75 FR 70558, November 17, 2010) (FRL–8848–9).
6. EPA. Response-to-Comments Document for the Notice on the Endocrine Disruptor Screening Program's Draft Policies and Procedures for Screening Safe Drinking Water Act Chemicals that published in the **Federal Register** on November 17, 2010 at 75 FR 70558. March 7, 2013.
7. EPA. Comment Response Document for the Second List of Chemicals and Substances for Tier 1 Screening under the Endocrine Disruptor Screening Program (Categorized Public Comments). February 1, 2013. Available in Docket ID Number EPA–HQ–OPPT–2009–0477.
8. EPA. Electronic Reporting Under the Toxic Substances Control Act; Proposed rule. **Federal Register** (77 FR 22707, April 17, 2012) (FRL–9337–5).
9. EPA. TSCA section 8(e); Notification of Substantial Risk; Policy Clarification and Reporting Guidance. **Federal Register** (68 FR 33129, June 3, 2003) (FRL–7287–4).
10. EPA. EPA's Approach for Considering Other Scientifically Relevant Information (OSRI) under the Endocrine Disruptor Screening Program (EDSP). March 26, 2009. Document ID Number EPA–HQ–OPPT–2007–1080–0032.
11. EPA. Weight-of-Evidence: Evaluating Results of EDSP Tier 1 Screening to Identify the Need for Tier 2 Testing. September 14, 2011. Document ID Number EPA–HQ–OPPT–2010–0877–0021.
12. EPA. Universe of Chemicals and General Validation Principles. November 2012. Available at *http://www.epa.gov/endo/pubs/edsp_chemical_universe_and_general_validations_white_paper_11_12.pdf.*
13. EPA. Response to Comments on the Public Review Draft of the Information Collection Request (ICR) entitled ''Addendum for the Second List of Chemicals; Tier 1 Screening of Certain Chemicals Under the Endocrine Disruptor Screening Program (EDSP).'' Available in Docket ID Number EPA–HQ–OPPT–2013–0275.
14. EPA. SAB. Review of the EPA's Proposed

Environmental Endocrine Disruptor Screening Program; Review of the Endocrine Disruptor Screening Program by a Joint Subcommittee of the Science Advisory Board and Scientific Advisory Panel. July 1999. EPA publication number EPA–SAB–EC–99–013. Available at *http://www.epa.gov/endo/pubs/sab_sap_report.pdf.*

15. EPA. U.S. Environmental Protection Agency Endocrine Disruptor Screening Program Comprehensive Management Plan. June 2012. Available at *http://www.epa.gov/endo/pubs/EDSP-comprehensive-management-plan.pdf.*
16. EPA. At a Glance: Issuing EDSP Second List Orders. (March 28, 2013).
17. EPA. Chemical Data Reporting Web site at *http://www.epa.gov/oppt/cdr.*
18. EPA. Status of EDSP Orders/DCIs as of Wednesday, January 2, 2013.
19. EPA. Sample Form: ''FFDCA § 408(p) Order for SDWA § 1457 Chemicals—Initial Response Form for Individual Order Recipients'' (EPA Form No. 6300–06). March 27, 2013. Available in Attachment D(3) to the ICR in Docket ID Number EPA–HQ–OPPT–2013–0275.
20. EPA. OCSPP Harmonized Test Guidelines Web site at *http://www.epa.gov/ocspp/pubs/frs/home/testmeth.htm.*
21. EPA. Sample Form: ''FFDCA § 408(p) Order for SDWA § 1457 Chemicals—Initial Response Form for Consortium'' (EPA Form No. 6300–06–C). March 27, 2013. Available in Attachment D(4) to the ICR in Docket ID Number EPA–HQ–OPPT–2013–0275.
22. EPA. Central Data Exchange Web site at *http://www.epa.gov/cdx.*
23. EPA. Claims of Confidentiality of Certain Chemical Identities Submitted under Section 8(e) of the Toxic Substances Control Act; Notice. **Federal Register** (75 FR 3462, January 21, 2010) (FRL–8807–9).

List of Subjects

Environmental protection, Chemicals, Endocrine disruptors, Pesticides and pests, Safe drinking water, Reporting and recordkeeping.

Dated: May 29, 2013.

James Jones,

Acting Assistant Administrator, Office of Chemical Safety and Pollution Prevention.

[FR Doc. 2013–14228 Filed 6–13–13; 8:45 am]

BILLING CODE 6560–50–P

ENVIRONMENTAL PROTECTION AGENCY

[EPA–HQ–OPPT–2009–0477; FRL–9375–8]

Endocrine Disruptor Screening Program; Final Second List of Chemicals and Substances for Tier 1 Screening

AGENCY: Environmental Protection Agency (EPA).

ACTION: Notice.

SUMMARY: This document announces the final second list of 109 chemicals identified for Tier 1 screening under the Endocrine Disruptor Screening Program (EDSP). The EDSP is established under section 408(p) of the Federal Food, Drug, and Cosmetic Act (FFDCA), which requires EPA to develop a chemical screening program using appropriate validated test systems and other scientifically relevant information to determine whether certain substances may have hormonal effects.

FOR FURTHER INFORMATION CONTACT: *For technical information contact:* Hannah Holsinger, Office of Water, 1200 Pennsylvania Ave. NW., Washington, DC 20460–0001 (MC–4607M); telephone number: (202) 564–0403, email address: *holsinger.hannah@epa.gov,* or Pat West, Office of Science Coordination and Policy, Environmental Protection Agency, 1200 Pennsylvania Ave. NW., Washington, DC 20460–0001 (MC–7201M); telephone number: (202) 564–1656, email address: *west.pat@epa.gov.*

For general information contact: The TSCA-Hotline, ABVI-Goodwill, 422 South Clinton Ave., Rochester, NY 14620; telephone number: (202) 554–1404; email address: *TSCA-Hotline@epa.gov.*

SUPPLEMENTARY INFORMATION:

I. General Information

A. Does this action apply to me?

You may be potentially affected by this action if you produce, manufacture, use, or import chemicals (including pesticide chemicals) that may be found in sources of drinking water; if you manufacture or import chemicals that degrade to chemicals found in sources of drinking water; or if you are, or may otherwise be, involved in the testing of chemicals for potential endocrine effects. The following list of North American Industrial Classification System (NAICS) codes is not intended to be exhaustive, but rather provides a guide to help readers determine whether this document applies to them. Potentially affected entities may include:

- Chemical manufacturers, importers and processors (NAICS code 325), e.g., persons who manufacture, import or process chemical substances.
- Pesticide, fertilizer, and other agricultural chemical manufacturers (NAICS code 3253), e.g., persons who manufacture, import or process pesticide, fertilizer and agricultural chemicals.
- Scientific research and development services (NAICS code 5417), e.g., persons who conduct testing of chemical substances for endocrine effects.

B. How can I get copies of this document and other related information?

The docket for this action, identified by docket identification (ID) number EPA–HQ–OPPT–2009–0477, is available at *http://www.regulations.gov* or at the Office of Pollution Prevention and Toxics Docket (OPPT Docket), Environmental Protection Agency Docket Center (EPA/DC), EPA West Bldg., Rm. 3334, 1301 Constitution Ave. NW., Washington, DC. The Public Reading Room is open from 8:30 a.m. to 4:30 p.m., Monday through Friday, excluding legal holidays. The telephone number for the Public Reading Room is (202) 566–1744, and the telephone number for the OPPT Docket is (202) 566–0280. Please review the visitor instructions and additional information about the docket available at *http://www.epa.gov/dockets.*

II. Background

A. What action is the agency taking?

This document announces the final second list of 109 chemicals identified for Tier 1 screening under the Endocrine Disruptor Screening Program (EDSP). The EDSP is established under section 408(p) of the Federal Food, Drug, and Cosmetic Act (FFDCA), which requires EPA to develop a chemical screening program using appropriate validated test systems and other scientifically relevant information to determine whether certain substances may have hormonal effects. After considering comments received on the draft second list of chemicals and substances published in the **Federal Register** notice of November 17, 2010 (75 FR 70248) (FRL–8848–7) (Ref. 1), EPA is announcing the final list of the second group of chemicals that will be subject to screening based on the approach described in the notice—''Endocrine Disruptor Screening Program; Final Policies and Procedures for Screening Safe Drinking Water Act (SDWA) Chemicals,'' published elsewhere in today's **Federal Register**.

The EDSP consists of a two-tiered approach to screen and test chemicals for potential endocrine disrupting effects. The purpose of Tier 1 screening is to identify substances that have the potential to interact with the endocrine system (specifically the estrogen, androgen, or thyroid hormone systems) using a battery of assays. Substances that have the potential to interact with estrogen, androgen or thyroid systems may proceed to Tier 2, which is designed to identify any adverse endocrine-related effects caused by the

substance, and establish a quantitative relationship between the dose and that endocrine effect. This second list should not be construed as a list of known or likely endocrine disruptors. Nothing in the approach for generating the second list provides a basis to infer that by simply being on this list these chemicals are suspected to interfere with the endocrine systems of humans or other species, and it would be inappropriate to do so. In a separate notice published elsewhere in today's **Federal Register**, EPA describes other aspects of EDSP such as the administrative procedures that EPA will use to require testing.

The second group of chemicals to be tested consists of chemicals that section 408(p) of the FFDCA (Ref. 2) requires be screened, i.e., pesticide active ingredients and chemicals used as pesticide inert ingredients (also known as other ingredients) and section 1457 of the 1996 amendment to the SDWA (Ref. 3). EPA developed this final list using the approach outlined in the **Federal Register** notice announcing the draft second list of chemicals and substances (Ref. 1). More information on EPA's priority setting approach is available at *http://www.epa.gov/scipoly/oscpendo/pubs/prioritysetting.*

This document does not describe other aspects of EDSP such as the administrative procedures EPA generally intends to use to require testing, the validated tests and battery that will be included in EDSP, or the timeframe for requiring the testing or receiving the data. The administrative procedures that EPA generally intends to use are described in a separate notice published elsewhere in today's **Federal Register**. The remaining topics will be addressed in separate notices that will be subsequently published in the **Federal Register**.

B. What is the agency's authority for taking this action?

FFDCA section 408(p) requires EPA to ''develop a screening program, using appropriate validated test systems and other scientifically relevant information, to determine whether certain substances may have an effect in humans that is similar to an effect produced by a naturally occurring estrogen, or such other endocrine effect as [EPA] may designate'' (21 U.S.C. 346a(p)). Section 408(p)(3) generally requires EPA to ''provide for the testing of all pesticide chemicals'' and gives EPA discretionary authority to ''provide for the testing of any other substance that may have an effect that is cumulative to an effect of a pesticide chemical if the Administrator determines that a substantial population may be exposed to such a substance'' (21 U.S.C. 346a(p)(3)). The statute also authorizes EPA to exempt a chemical upon a determination that ''the substance is anticipated not to produce any effect in humans similar to an effect produced by a naturally occurring estrogen.'' (21 U.S.C. 346a(p)(4)).

Section 1457 of SDWA states that ''in addition to the substances'' referred to in FFDCA section 408(p)(3)(B), ''the Administrator may provide for testing under the screening program authorized by section 408(p) of such Act, in accordance with the provisions of section 408(p) of such Act, of any other substance that may be found in sources of drinking water if the Administrator determines that a substantial population may be exposed to such substance'' (42 U.S.C. 300j–17). EPA used its authority under SDWA to identify a portion of the chemicals on the second EDSP list.

III. History

EPA developed EDSP in response to a Congressional mandate in FFDCA ''to determine whether certain substances may have an effect in humans that is similar to an effect produced by a naturally occurring estrogen, or such other endocrine effect as [EPA] may designate'' (21 U.S.C. 346a(p)). Unit II.B. describes the authority for listing a chemical. As part of EDSP, EPA issues orders to collect certain test data on selected chemical substances. In general, EPA intends to use the data collected under EDSP, along with other information, to determine if a pesticide chemical or other substances may pose a risk to human health or the environment due to disruption of the endocrine system. The determination that a chemical does or is not likely to have the potential to interact with the endocrine system will be made on a weight-of-evidence basis taking into account data from the Tier 1 assays and/or other scientifically relevant information. Chemicals that go through Tier 1 screening and are found to have the potential to interact with the estrogen, androgen, or thyroid hormone systems will proceed to the next state of EDSP where EPA will determine which, if any, of the Tier 2 tests are necessary based on available data. Tier 2 testing is designed to identify any adverse endocrine-related effects caused by the substance, and establish a quantitative relationship between the dose and that endocrine effect. Further information regarding EDSP and requirements for Tier 1 and Tier 2 testing can be found on the Agency's EDSP Web site, at *http://www.epa.gov/endo/.*

IV. Development of the Second EDSP List

The House Appropriations Committee report for EPA's FY 2010 appropriations (H.R. 2996, H. Rept. 111–180) (Ref. 4), directed EPA to publish within 1 year of enactment a second list of no less than 100 chemicals for screening that includes drinking water contaminants, such as halogenated organic chemicals, dioxins, flame retardants polybrominated diphenyl ethers, polychlorinated biphenyls, perfluorocarbons (PFCs), plastics, bisphenol A, pharmaceuticals and personal care products, and issue 25 orders per year for the testing of these chemicals. This process also should allow for public input. In response, EPA published a draft second list of chemicals for Tier 1 screening on November 17, 2010 and solicited public comments on the list of chemicals. The development of the draft second list is described at length in that **Federal Register** notice (Ref. 1).

EPA received comment letters from approximately 60 organizations or individuals on the November 17, 2010 draft second EDSP list. These organizations/individuals included a water-related association, environmental advocacy groups, chemical industry, consumer and pet advocacy groups, and consultants writing on behalf of the industry. This notice summarizes major comments EPA received, along with the Agency's response. A complete listing of public comments and EPA's responses related to the draft second list of chemicals for Tier 1 screening are included in the document entitled ''Final Comment Response Document for the Second Endocrine Disruptor Screening Program List (Categorized Public Comments).'' The document is available in the docket for this action under docket ID number EPA–HQ–OPPT–2009–0477.

A. SDWA 1457

Some commenters stated that EPA had not met the requirements of SDWA 1457 when listing the draft second EDSP list. They stated that a chemical's inclusion on the third Contaminant Candidate List (CCL3) does not mean that the chemical meets SDWA 1457 requirements. SDWA 1457 states that ''the Administrator may provide for testing under the screening program authorized by section 408(p) of such Act, . . . of any other substance that may be found in sources of drinking water if the Administrator determines that a substantial population may be exposed to such substance.'' SDWA section 1457 sets forth the criteria for

the selection of substances for EDSP. Section 1457 does not require the Agency to promulgate regulations further defining these criteria.

For the EDSP, EPA selected contaminants from the CCL3, for which EPA had evaluated the nature of the occurrence and prevalence information (Ref. 5), and selected contaminants from National Primary Drinking Water Regulations (NPDWRs), which were designated by Congress for regulation due to concerns about occurrence in drinking water and adverse impacts on human health. The scientific basis for EPA's selection of contaminants on the CCL3 also provides the basis for EPA's determination that a chemical may be found in sources of drinking water to which a substantial population may be exposed for the purposes of SDWA section 1457.

B. Support for Contaminants Listed in the Draft Second List

The Agency received comments supporting the contaminants included on the draft second EDSP list. One commenter stated that the draft second EDSP list was an appropriate starting point since it was developed from existing NPDWRs and the CCL3. Another commenter acknowledged that many of the chemicals included on the draft second EDSP list have already undergone a rigorous review within the Agency for exposure potential in vulnerable populations and noted there is incomplete toxicity data for the general population. The commenter stated that EDSP will contribute important information about endocrine disrupting potential of chemicals which have never been tested for sensitive endpoints in estrogen, androgen, and thyroid hormone disruption.

C. Exclusion or Inclusion of Contaminants

EPA received comments concerning contaminants that are no longer manufactured or that have been cancelled (banned), indicating these should be removed from the list. EPA also received comments related to chemicals with physiochemical properties that would likely result in test assay incompatibility issues. EPA agrees that contaminants derived from chemicals that have been banned or are no longer manufactured should be removed from the list. EPA has generally determined that it would be reasonable to prioritize testing for those compounds which a manufacturer, importer, or registrant is clearly identifiable and the Agency could order these entities to conduct the testing. Chemicals that have been banned or are no longer manufactured (or imported) do not fit within this category. EPA also agrees that it would be reasonable to exclude chemicals from the second list based on the highly reactive physiochemical properties of the chemicals and test assay incompatibility issues. The exclusion rationales for streamlining the second EDSP list are discussed in the **Federal Register** notice for the draft second list (Ref. 1).

Table 1 of this notice contains a list of chemicals that EPA believes should be removed from the final second list because they are no longer manufactured, are banned chemicals, or the chemicals have physiological properties that make them highly reactive and incompatible with the testing assays. Other chemicals remain on the list as they are still in use and may be found in sources of drinking water (see Unit IV.A. of this notice).

Other comments EPA received stated those chemicals with a maximum contaminant level goal of zero should be removed. EPA recognizes that it may not be possible to set more stringent levels for some of these chemicals at this time. However, it is important to note that most of the chemicals with maximum contaminant level goals of zero are based on chronic health endpoints and compounds with endocrine disrupting effects that can be subchronic. Also, it would be important to understand whether a chemical might be an endocrine disruptor with subchronic impacts since this may inform the Agency's risk assessment and how best to address this contaminant from a regulatory standpoint. In addition, if endocrine effects occur at a level lower than the current maximum contaminant level, the Agency might consider whether improvements in analytical feasibility, which would allow measurements at the level of endocrine effects, have been developed since the promulgation of the existing MCLs.

EPA also received comments stating that the Agency should have included some chemicals (e.g., triclosan, alkylphenols and alkylphenol polyethoxylates, bisphenol A, musk fragrances, and pharmaceutical estrogens) with known or suspected endocrine disrupting effects on the second list. When compiling the second EDSP list, EPA focused on priority drinking water contaminants and pesticides previously identified by EPA. These priority chemicals included the CCL3 chemicals, chemicals with NPDWRs, and registration review pesticides. The basis for chemical selection is described in the **Federal Register** notice for the draft second list (Ref. 1). While the chemicals mentioned in the comments were not included on the current EDSP list, they may be included on future EDSP lists. Several of the chemicals suggested by commenters were evaluated as part of the CCL3 process but did not make the final CCL3 for reasons that are outlined in EPA supporting documents ''Final Contaminant Candidate List 3 Chemicals: Identifying the Universe, Final Contaminant Candidate List 3 Chemicals: Screening to a PCCL,'' and ''Final Contaminant Candidate List 3 Chemicals: PCCL to CCL'' (Refs. 6, 7, and 8).

As for the current approach for selecting chemicals for the second EDSP list, EPA excluded chemicals that are hormones with confirmed effects as stated in the **Federal Register** notice for the draft second list (Ref. 1). EPA did not give weight to information on the potential for a chemical to cause endocrine effects as criteria for listing as the purpose of the second EDSP list is to identify substances that have the potential to interact with the endocrine system using appropriate validated test systems and other scientifically relevant information. The final second EDSP list should neither be construed as a list of known or likely endocrine disruptors nor characterized as such.

Some commenters also stated that naturally occurring contaminants should be excluded from the draft second EDSP list. EPA sought and used the best available information regarding all substances on the draft second EDSP list, including those that have the potential to naturally occur. Although EPA acknowledges that some substances on the list (e.g., acetaldehyde, acrylamide, methanol, and perchlorate) can occur naturally in the environment, this is not the only known pathway of occurrence for these chemicals to enter into the environment. A basis for chemical selection includes selecting substances that are known or anticipated to occur in public drinking water. Anthropogenic pathways for these chemicals to enter the environment are shown through data from the Toxic Release Inventory (TRI), Chemical Update System/Inventory Update Rule (CUS/IUR), and chemical manufacturing information. Consequently, EPA does not believe that the fact that these chemicals can occur naturally is sufficient reason to exclude the manufacturers and importers of these chemicals from conducting the necessary testing.

D. Pesticide Registration Review Issues

EPA received comments stating that pesticide active ingredients should not be included on EDSP list and suggesting

that issuance of test orders should align with pesticide registration review schedules.

The Agency is working toward integrating EDSP and the Registration Review Program, such that the data gathering may be completed in a coordinated manner under these two programs to permit a timely registration review decision inclusive of EDSP and not rely on the fixed chemical list approach for active ingredients. Ultimately, EPA intends that chemicals scheduled for registration review may receive EDSP test orders and the data submitted in response to those orders are coordinated with the submission of data required under registration review. The Agency may then review and evaluate the data submitted for both programs in the same time frame, complete the risk assessment with EDSP outcomes as appropriate, and likely conclude registration review for a given chemical within the schedule, enhancing efficiency. Currently, however, EPA does not have an information collection request (ICR) clearance to issue orders to require EDSP testing generally for registration review chemicals. While the ICR clearance process continues, EPA continues to rely on the chemical list approach for the fiscal year 2007/2008 registration review chemicals in an attempt to begin to address EDSP testing for the early registration review chemicals.

V. The Final Second List of Chemicals and Substances for Tier 1 Screening

A. Chemicals and Substances Removed From the Draft Second List for Tier 1 Screening

EPA removed 25 chemicals and substances from the draft second list based on two of the criteria published in the November 17, 2010 issue of the **Federal Register**, (Ref. 1):

1. Chemicals for which the manufacturer, importer or registrant cannot be clearly identified (criterion two).

2. Chemicals not likely to be biologically active or which are incompatible with testing assays for various reasons due to one or more of their physiochemical properties (criterion five).

EPA reevaluated the draft second list of chemicals and substances based on public comments and determined that sufficient data exist to remove a total of 25 additional contaminants based on criterion two (n=21) and criterion five (n=4). Table 1 presents an alphabetized list of 25 chemicals and substances EPA removed from the original list of 134 proposed for Tier 1 screening and provides the rationale for removal.

Although these chemicals have been removed from the second group of chemicals and substances that EPA will screen, it is important to note that the removal of these chemicals and substances does not imply that the Agency has no interest in the potential for endocrine disruption activity for these contaminants. At this time the Agency realizes that there is some difficulty with collecting the information about endocrine effects through EDSP because of the Agency's inability to identify a manufacturer, importer, or registrant or because the contaminant is incompatible with the testing assays.

TABLE 1—CHEMICALS REMOVED FROM DRAFT SECOND EDSP LIST

Chemical name	CAS Reg No.	SDWA	PAI	Rationale
1. 1, 2-Dibormo-3-chlorproprane (DBCP)	96–12–8	X		Pesticide not in use; TRI and/or IUR indicates importers or manufacturers are unlikely.
2. 2, 4, 5–TP (Silvex)	93–72–1	X		Pesticide not in use; TRI and/or IUR indicates importers or manufacturers are unlikely.
3. Benzyl chloride	100–44–7	X		Physiochemical properties—highly reactive; incompatible with the testing assays.
4. Chlordane	57–74–9	X		Pesticide not in use; TRI and/or IUR indicates importers or manufacturers are unlikely.
5. Cumene hydroperoxide	80–15–9	X		Physiochemical properties—highly reactive; incompatible with the testing assays.
6. Dalapon	75–99–0	X		Pesticide not in use; TRI and/or IUR indicates importers or manufacturers are unlikely.
7. Dimethipin	55290–64–7	X		Pesticide not in use; TRI and/or IUR indicates importers or manufacturers are unlikely.
8. Dinoseb	88–85–7	X		Pesticide not in use; TRI and/or IUR indicates importers or manufacturers are unlikely.
9. Endrin	72–20–8	X		Pesticide not in use; TRI and/or IUR indicates importers or manufacturers are unlikely.
10. Ethylene dibromide (EDB)	106–93–4	X		Pesticide not in use; TRI and/or IUR indicates importers or manufacturers are unlikely.
11. Fenamiphos	22224–92–6	X	X	Pesticide not in use; TRI and/or IUR indicates importers or manufacturers are unlikely.
12. Fenarimol	60168–88–9		X	Pesticide not in use; TRI and/or IUR indicates importers or manufacturers are unlikely.
13. Fenoxycarb	72490–01–8		X	Pesticide not in use; TRI and/or IUR indicates importers or manufacturers are unlikely.

TABLE 1—CHEMICALS REMOVED FROM DRAFT SECOND EDSP LIST—Continued

Chemical name	CAS Reg No.	SDWA	PAI	Rationale
14. Heptachlor	76–44–8	X		Pesticide not in use; TRI and/or IUR indicates importers or manufacturers are unlikely.
15. Heptachlor epoxide	1024–57–3	X		Pesticide not in use; TRI and/or IUR indicates importers or manufacturers are unlikely.
16. Methoxychlor	72–43–5	X		Pesticide not in use; TRI and/or IUR indicates importers or manufacturers are unlikely.
17. Molinate	2212–67–1	X		Pesticide not in use; TRI and/or IUR indicates importers or manufacturers are unlikely.
18. Oxirane, methyl-	75–56–9	X		Physiochemical properties—highly reactive; incompatible with the testing assays.
19. Propetamphos	31218–83–4		X	Pesticide not in use; TRI and/or IUR indicates importers or manufacturers are unlikely.
20. Pyridate	55512–33–9		X	Pesticide not in use; TRI and/or IUR indicates importers or manufacturers are unlikely.
21. Sodium tetrathiocarbonate	7345–69–9		X	Pesticide not in use; TRI and/or IUR indicates importers or manufacturers are unlikely.
22. Sulfosate	81591–81–3		X	Pesticide not in use; TRI and/or IUR indicates importers or manufacturers are unlikely.
23. Temephos	3383–96–8		X	Pesticide not in use; TRI and/or IUR indicates importers or manufacturers are unlikely.
24. Toxaphene	8001–35–2	X		Pesticide not in use; TRI and/or IUR indicates importers or manufacturers are unlikely.
25. Triethylamine	121–44–8	X		Physiochemical properties—highly reactive; incompatible with the testing assays.

Endnotes—Table 1:
- TRI contains information on toxic chemical releases from facilities that meet reporting criteria (for most chemicals the thresholds are 25,000 pounds for manufacturing and processing and 10,000 pounds for use).
- IUR contains site and manufacturing information for chemicals manufactured (including imported) in amounts of 25,000 pounds or greater at a single site.

B. The Final Second List of Chemical and Substances for EDSP Tier 1 Screening

Table 2 presents an alphabetized list of the 109 chemicals and substances included in the final second EDSP list of chemicals for Tier 1 screening. As in the draft second list, the final list includes pesticides, two PFCs, and three pharmaceuticals (erythromycin, nitroglycerin, and quinoline). The list also consists of an array of other chemicals ranging from those used for industrial manufacturing processes, as plasticizers, or in the production of pharmaceutical, personal care products, and toxic substances. Because this list of chemicals was selected on the basis of exposure potential only, it should neither be construed as a list of known or likely endocrine disruptors nor characterized as such.

TABLE 2—FINAL SECOND EDSP LIST OF CHEMICALS FOR TIER 1 SCREENING

Chemical name	CAS Reg No.	SDWA	PAI
1. 1,1,1,2-Tetrachloroethane	630–20–6	X	
2. 1,1,1-Trichloroethane	71–55–6	X	
3. 1,1,2-Trichloroethane	79–00–5	X	
4. 1,1-Dichloroethane	75–34–3	X	
5. 1,1-Dichloroethylene	75–35–4	X	
6. 1,2,3-Trichloropropane	96–18–4	X	
7. 1,2,4-Trichlorobenzene	120–82–1	X	
8. 1,2-Dichloroethane	107–06–2	X	
9. 1,2-Dichloropropane	78–87–5	X	
10. 1,3-Dinitrobenzene	99–65–0	X	
11. 1,4-Dioxane	123–91–1	X	
12. 1-Butanol	71–36–3	X	
13. 2-Methoxyethanol	109–86–4	X	
14. 2-Propen-1-ol	107–18–6	X	
15. 4,4'-Methylenedianiline	101–77–9	X	
16. Acetaldehyde	75–07–0	X	

TABLE 2—FINAL SECOND EDSP LIST OF CHEMICALS FOR TIER 1 SCREENING—Continued

Chemical name	CAS Reg No.	SDWA	PAI
17. Acetamide	60–35–5	X	
18. Acetochlor	34256–82–1	X	X
19. Acetochlor ethanesulfonic acid (ESA)	187022–11–3	X	
20. Acetochlor oxanilic acid (OA)	194992–44–4	X	
21. Acrolein	107–02–8	X	X
22. Acrylamide	79–06–1	X	
23. Alachlor	15972–60–8	X	X
24. Alachlor ethanesulfonic acid (ESA)	142363–53–9	X	
25. Alachlor oxanilic acid (OA)	171262–17–2	X	
26. alpha-Hexachlorocyclohexane	319–84–6	X	
27. Aniline	62–53–3	X	
28. Bensulide	741–58–2	X	X
29. Benzene	71–43–2	X	
30. Benzo(a)pyrene (PAHs)	50–32–8	X	
31. Butylated hydroxyanisole	25013–16–5	X	
32. Carbon tetrachloride	56–23–5	X	
33. Chlorobenzene	108–90–7	X	
34. cis-1,2-Dichloroethylene	156–59–2	X	
35. Clethodim	99129–21–2	X	X
36. Clofentezine	74115–24–5		X
37. Clomazone	81777–89–1		X
38. Coumaphos	56–72–4		X
39. Cyanamide	420–04–2		X
40. Cyromazine	66215–27–8		X
41. Denatonium saccharide	90823–38–4		X
42. Di(2-ethylhexyl) adipate	103–23–1	X	
43. Dichloromethane	75–09–2	X	
44. Dicrotophos	141–66–2	X	X
45. Diuron	330–54–1	X	X
46. Endothall	145–73–3	X	X
47. Epichlorohydrin	106–89–8	X	
48. Erythromycin	114–07–8	X	
49. Ethylbenzene	100–41–4	X	
50. Ethylene glycol	107–21–1	X	
51. Ethylene thiourea	96–45–7	X	
52. Ethylurethane	51–79–6	X	
53. Etofenprox	80844–07–1		X
54. Fenoxaprop-*P*-ethyl	71283–80–2		X
55. Flumetsulam	98967–40–9		X
56. Fomesafen sodium	108731–70–0		X
57. Fosetyl-Al (Aliette)	39148–24–8		X
58. Glufosinate ammonium	77182–82–2		X
59. HCFC–22	75–45–6	X	
60. Hexachlorobenzene	118–74–1	X	
61. Hexachlorocyclopentadiene	77–47–4	X	
62. Hexane	110–54–3	X	
63. Hexythiazox	78587–05–0		X
64. Hydrazine	302–01–2	X	
65. Isoxaben	82558–50–7		X
66. Lactofen	77501–63–4		X
67. Lindane	58–89–9	X	
68. Methanol	67–56–1	X	
69. Methyl tert-butyl ether	1634–04–4	X	
70. Metolachlor ethanesulfonic acid (ESA)	171118–09–5	X	
71. Metolachlor oxanilic acid (OA)	152019–73–3	X	
72. Nitrobenzene	98–95–3	X	
73. Nitroglycerin	55–63–0	X	
74. *N*-Methyl-2-pyrrolidone	872–50–4	X	
75. *N*-Nitrosodimethylamine (NDMA)	62–75–9	X	
76. *n*-Propylbenzene	103–65–1	X	
77. *o*-Dichlorobenzene	95–50–1	X	
78. *o*-Toluidine	95–53–4	X	
79. Oxydemeton-methyl	301–12–2	X	X
80. Oxyfluorfen	42874–03–3	X	X
81. Paclobutrazol	76738–62–0		X
82. *p*-Dichlorobenzene	106–46–7	X	X
83. Pentachlorophenol	87–86–5	X	X
84. Perchlorate	14797–73–0	X	
85. Perfluorooctane sulfonic acid (PFOS)	1763–23–1	X	
86. Perfluorooctanoic acid (PFOA)	335–67–1	X	
87. Picloram	1918–02–1	X	X
88. Polychlorinated biphenyls	1336–36–3	X	

TABLE 2—FINAL SECOND EDSP LIST OF CHEMICALS FOR TIER 1 SCREENING—Continued

Chemical name	CAS Reg No.	SDWA	PAI
89. Profenofos	41198–08–7	X	X
90. Propionic acid	79–09–4		X
91. Quinclorac	84087–01–4		X
92. Quinoline	91–22–5	X	
93. Quizalofop-P-ethyl	100646–51–3		X
94. RDX	121–82–4	X	
95. sec-Butylbenzene	135–98–8	X	
96. Styrene	100–42–5	X	
97. Terbufos	13071–79–9	X	X
98. Terbufos sulfone	56070–16–7	X	
99. Tetrachloroethylene	127–18–4	X	
100. Thiophanate-methyl	23564–05–8	X	X
101. Toluene diisocyanate	26471–62–5	X	
102. trans-1,2-Dichloroethylene	156–60–5	X	
103. Trichloroethylene	79–01–6	X	
104. Triflumizole	68694–11–1		X
105. Trinexapac-ethyl	95266–40–3		X
106. Triphenyltin hydroxide (TPTH)	76–87–9	X	X
107. Vinclozolin	50471–44–8	X	X
108. Xylenes (total)	1330–20–7	X	X
109. Ziram	137–30–4	X	X
Total		88	41

VI. References

The following is a list of the documents that are specifically referenced in this document. These references are available at *http://www.regulations.gov.*

1. USEPA. 2010. Endocrine Disruptor Screening Program; Second List of Chemicals for Tier 1 Screening; Notice. **Federal Register**, 75 FR 70248, November 17, 2010.
2. USEPA. 1996. FFDCA section 408(p). Available on-line at *http://epw.senate.gov/FDA_001.pdf.*
3. USEPA. 1996. Amendments to the Safe Drinking Water Act. Available on-line at: *http://water.epa.gov/lawsregs/guidance/sdwa/text.cfm.*
4. U.S. Congress. House Report 111–180. Available at: *http://www.gpo.gov/fdsys/pkg/CRPT-111hrpt180/pdf/CRPT-111hrpt180.pdf.*
5. USEPA. 2009. Drinking Water Contaminant Candidate List 3—Final; Notice. **Federal Register**. Vol. 74. No 194. p. 51850. October 8, 2009.
6. USEPA. 2009. Final Contaminant Candidate List 3 Chemicals: Identifying the Universe, EPA 815–R–09–006. August 2009.
7. USEPA. 2009. Final Contaminant Candidate List 3 Chemicals: Screening to a PCCL, EPA 815–R–05–007. August, 2009.
8. USEPA. 2009. Final Contaminant Candidate List 3 Chemicals: Classification of the PCCL to the CCL, EPA 815–R–09–008. August, 2009.

List of Subjects

Environmental protection, Chemicals, Drinking water, Endocrine disruptors, Pesticides.

Dated: May 29, 2013.

James Jones,

Acting Assistant Administrator, Office of Chemical Safety and Pollution Prevention.

[FR Doc. 2013–14232 Filed 6–13–13; 8:45 am]

BILLING CODE 6560–50–P

ENVIRONMENTAL PROTECTION AGENCY

[ER–FRL–9009–6]

Environmental Impacts Statements; Notice of Availability

Responsible Agency: Office of Federal Activities, General Information (202) 564–7146 or *http://www.epa.gov/compliance/nepa/.*

Weekly receipt of Environmental Impact Statements

Filed 06/03/2013 through 06/07/2013.

Pursuant to 40 CFR 1506.9.

Notice

Section 309(a) of the Clean Air Act requires that EPA make public its comments on EISs issued by other Federal agencies. EPA's comment letters on EISs are available at: *http://www.epa.gov/compliance/nepa/eisdata.html.*

EIS No. 20130160, Final EIS, USFS, OR, McKay Fuels and Vegetation Management Project, Review Period Ends: 07/15/2013, Contact: Marcy Anderson 541–416–6463.

EIS No. 20130161, Draft EIS, USFS, MT, East Reservoir Project, Comment Period Ends: 07/29/2013, Contact: Denise Beck 406–293–7773, ext. 7504.

EIS No. 20130162, Final EIS, BLM, NM, SunZia Southwest Transmission Project, Proposed Resource Management Plan Amendments, Review Period Ends: 07/15/2013, Contact: Adrian Garcia 505–954–2199.

EIS No. 20130163, Draft EIS, FERC, AL, Martin Dam Hydroelectric Project, Relicensing, Comment Period Ends: 08/13/2013, Contact: Stephen Bowler 202–502–6861.

EIS No. 20130164, Revised Draft EIS, USAF, FL, F–35 Beddown at Eglin Air Force Base, Comment Period Ends: 07/29/2013, Contact: Mike Spaits 850–882–2836.

EIS No. 20130165, Draft EIS, BLM, SD, South Dakota Resource Management Plan, Comment Period Ends: 09/11/2013, Contact: Mitch Iverson 605–892–7008.

EIS No. 20130166, Final EIS, USFWS, NiSource Multi-Species Habitat Conservation Plan, Review Period Ends: 07/15/2013, Contact: Thomas J. Magnuson 612–713–5467.

EIS No. 20130167, Draft EIS, NOAA, MI, Thunder Bay National Marine Sanctuary, Boundary Expansion, Comment Period Ends: 08/14/2013, Contact: Jeff Gray 989–356–8805.

EIS No. 20130168, Final EIS, USACE, CA, Feather River West Levee Project Final 408 Permission, Review Period Ends: 07/15/2013, Contact: Jeffery Koschak 916–557–6994.

EIS No. 20130169, Final Supplement, NRC, TN, Operation of Watts Bar Nuclear Plant, Unit 2 NUREG–0498, Supplement 2, Review Period Ends:

07/15/2013, Contact: Elaine Keegan 301–415–8517.

EIS No. 20130170, Draft Supplement, USACE, CA, Sutter Basin Pilot Draft Feasibility Study, Comment Period Ends: 07/29/2013, Contact: Brad Johnson 916–557–7812.

Amended Notices

EIS No. 20130159, Final Supplement, USACE, IN, Indianapolis North Flood Damage Reduction Project, Review Period Ends: 07/08/2013, Contact: Keith Keeney 502–315–6885. Revision to FR Notice Published 06/07/2013; Change Agency Contact and Phone Number to Keith Keeney (502) 315–6885.

Dated: June 11, 2013.

Cliff Rader,

Director, NEPA Compliance Division, Office of Federal Activities.

[FR Doc. 2013–14195 Filed 6–13–13; 8:45 am]

BILLING CODE 6560–50–P

ENVIRONMENTAL PROTECTION AGENCY

[FRL–9823–3]

Proposed Listing of Additional Waters To Be Included on Indiana's 2010 List of Impaired Waters Under Section 303(d) of the Clean Water Act

AGENCY: Environmental Protection Agency (EPA).

ACTION: Notice and request for comments.

SUMMARY: This notice announces the availability of EPA's proposed decision identifying water quality limited segments and associated pollutants in Indiana to be listed pursuant to the Clean Water Act Section 303(d)(2), and requests public comment. Section 303(d)(2) requires that states submit and EPA approve or disapprove lists of waters for which existing technology-based pollution controls are not stringent enough to attain or maintain state water quality standards and for which total maximum daily loads (TMDLs) must be prepared.

On May 8, 2013, EPA partially approved and partially disapproved Indiana's 2010 303(d) list submittal. Specifically, EPA approved Indiana's listing of certain water quality limited segments and associated pollutants (*Table 1* in *Appendix A1* of EPA's decision document for Indiana's 2010 303(d) list). EPA disapproved Indiana's decision not to list water quality limited segments for certain metal pollutants.

After conducting a complete review, EPA identified the waterbodies and associated metal pollutants (e.g. aluminum, iron, copper, lead, and zinc) to be added to Indiana's 2010 303(d) list (*Table 12* in *Appendix A1* of EPA's decision document). EPA is providing the public the opportunity to review its proposed decision to add waters and pollutants to Indiana's 2010 Clean Water Act Section 303(d) list. EPA will consider public comments in reaching its final decision on the additional waterbodies and pollutants identified for inclusion on Indiana's final 2010 303(d) list.

DATES: Comments on this document must be received in writing by July 15, 2013.

ADDRESSES: Written comments on today's notice may be submitted to Tinka Hyde, Director, Water Division, Attn: Indiana's 303(d) list, U.S. Environmental Protection Agency, 77 West Jackson Boulevard, Chicago, Illinois 60604. As an alternative, EPA will accept comments electronically. Comments should be sent to the following email address: *rivera-carrero.vilma@epa.gov*.

FOR FURTHER INFORMATION CONTACT: Vilma Rivera-Carrero, Watersheds and Wetlands Branch, at the EPA address noted above or by telephone at (312) 886–7795.

SUPPLEMENTARY INFORMATION: Section 303(d) of the Clean Water Act (CWA) requires that each state identify those waters for which existing technology-based pollution controls are not stringent enough to attain or maintain state water quality standards. For those waters, states are required to establish TMDLs according to a priority ranking.

EPA's Water Quality Planning and Management regulations include requirements related to the implementation of Section 303(d) of the CWA (40 CFR 130.7). The regulations require states to identify water quality limited segments still requiring TMDLs every two years. The lists of waters still needing TMDLs must also include priority rankings and must identify the waters targeted for TMDL development during the next two years (40 CFR 130.7).

Consistent with EPA's regulations, Indiana submitted to EPA its Section 303(d) list of impaired waters on November 30, 2010. On May 8, 2013, EPA approved Indiana's listing of certain water quality limited segments and associated pollutants. EPA also disapproved Indiana's decision to not include 125 water quality limited segments and associated metal pollutants on its Section 303(d) list, based on a change in the State's listing methodology. Indiana's new listing methodology included a revised approach for determining aquatic life use support with regards to metal toxicants. This revised assessment approach excludes the use of total recoverable metals data and the use of derived criteria (Tier I criteria and Tier II values). As a result of EPA's disapproval decision, EPA is proposing to place certain water bodies with associated impairments on Indiana's 2010 Section 303(d) list. EPA believes that these waters and associated pollutants, based on its assessment determinations, meet the federal requirements for listing under Section 303(d). For additional information, refer to Items 3 and 4 in Subsection B, and Subsection K under Section II of EPA's decision document for Indiana's 2010 303(d) list. EPA's decision document is available at *http://www.epa.gov/region5/water/impairedwatersin/index.html*.

EPA is soliciting public comment on its identification of 125 waters and 139 associated metal impairments set out for inclusion on Indiana's 2010 Section 303(d) list (*Table 12* of *Appendix A1* to EPA's decision document). These proposed additions include 66 new impairments to 59 waterbody assessment units (AUs) previously listed for other impairments, and 66 waterbody AUs with 73 impairments newly listed. After considering public comments and making any appropriate revisions, EPA will transmit a final determination and any final listings to the State. Any new listings will then be part of Indiana's 2010 Section 303(d) list and will be carried forward onto future lists, including Indiana's proposed 2012 Section 303(d) list.

Dated: May 23, 2013.

Tinka G. Hyde,

Director, Water Division, EPA Region 5.

[FR Doc. 2013–14192 Filed 6–13–13; 8:45 am]

BILLING CODE 6560–50–P

FEDERAL DEPOSIT INSURANCE CORPORATION

Update to Notice of Financial Institutions for Which the Federal Deposit Insurance Corporation Has Been Appointed Either Receiver, Liquidator, or Manager

AGENCY: Federal Deposit Insurance Corporation.

ACTION: Update Listing of Financial Institutions in Liquidation.

SUMMARY: Notice is hereby given that the Federal Deposit Insurance Corporation (Corporation) has been

appointed the sole receiver for the following financial institutions effective as of the Date Closed as indicated in the listing. This list (as updated from time to time in the **Federal Register**) may be relied upon as ''of record'' notice that the Corporation has been appointed receiver for purposes of the statement of policy published in the July 2, 1992 issue of the **Federal Register** (57 FR 29491). For further information concerning the identification of any institutions which have been placed in liquidation, please visit the Corporation Web site at *www.fdic.gov/bank/individual/failed/banklist.html* or contact the Manager of Receivership Oversight in the appropriate service center.

Dated: June 10, 2013.

Federal Deposit Insurance Corporation.

Pamela Johnson,

Regulatory Editing Specialist.

INSTITUTIONS IN LIQUIDATION

[In alphabetical order]

FDIC Ref. No.	Bank name	City	State	Date closed
10482	1st Commerce Bank	North Las Vegas	NV	6/6/2013
10483	Mountain National Bank	Sevierville	TN	6/7/2013

[FR Doc. 2013–14145 Filed 6–13–13; 8:45 am]

BILLING CODE 6714–01–P

FEDERAL MARITIME COMMISSION

Sunshine Act Meeting

AGENCY HOLDING THE MEETING: Federal Maritime Commission.

TIME AND DATE: June 20, 2013; 10:00 a.m.

PLACE: 800 N. Capitol Street NW., First Floor Hearing Room, Washington, DC.

STATUS: The first portion of the meeting will be in Open Session and the remainder of the meeting will be in Closed Session.

MATTERS TO BE CONSIDERED:

Open Session

1. Staff Briefing on the Initial Draft FMC 2014–2018 Information Resources Management (IRM) Strategic Plan.

2. Docket No. 11–22: Non-Vessel-Operating Common Carrier Negotiated Rate Arrangements; Tariff Publication Exemption.

Closed Session

1. Docket No. 12–01: OC International Freight Inc., OMJ International Freight, Inc., and Omar Collado.

2. Section 15 Order Regarding Competition, Rates and Service in the U.S.-Australia/New Zealand Northbound and Southbound Trade.

3. Staff Briefing on Semi-Annual Meeting with Transpacific Stabilization Agreement Representatives.

CONTACT PERSON FOR MORE INFORMATION: Karen V. Gregory, Secretary, (202) 523 5725.

Rachel E. Dickon,

Assistant Secretary.

[FR Doc. 2013–14336 Filed 6–12–13; 4:15 pm]

BILLING CODE 6730–01–P

FEDERAL RESERVE SYSTEM

Change in Bank Control Notices; Acquisitions of Shares of a Bank or Bank Holding Company

The notificants listed below have applied under the Change in Bank Control Act (12 U.S.C. 1817(j)) and § 225.41 of the Board's Regulation Y (12 CFR 225.41) to acquire shares of a bank or bank holding company. The factors that are considered in acting on the notices are set forth in paragraph 7 of the Act (12 U.S.C. 1817(j)(7)).

The notices are available for immediate inspection at the Federal Reserve Bank indicated. The notices also will be available for inspection at the offices of the Board of Governors. Interested persons may express their views in writing to the Reserve Bank indicated for that notice or to the offices of the Board of Governors. Comments must be received not later than July 1, 2013.

A. Federal Reserve Bank of Atlanta (Chapelle Davis, Assistant Vice President) 1000 Peachtree Street NE., Atlanta, Georgia 30309:

1. *Charles P. Stephens, Atlanta, Georgia, individually and as trustee of MAD Trust for S.D. Stephens, SDT U/A 12–23–92 trust, MAD GST for CA Stephens trust, and MAD GST for SR Stephens trust; Sandra D. Stephens, Atlanta, Georgia, individually and as trustee of MAD Trust for S.D. Stephens, MAD GST for CA Stephens trust, and MAD GST for SR Stephens trust; Scott R. Stephens, Lake Panasofkee, Florida, individually and as trustee of MAD Trust for S.D. Stephens; Charles A. Stephens, Atlanta, Georgia, individually; Stephanie T. Stephens, Atlanta, Georgia, individually; Longball Ventures LLC, Jacksonville, Florida; M. Austin Davis Foundation, Jacksonville, Florida; Ventura Investments, LLC, Jacksonville, Florida; SDT U/A 12–23–92 trust, Jacksonville, Florida; MAD GST for CA Stephens trust, Jacksonville, Florida; and MAD GST for SR Stephens trust,* Jacksonville, Florida; to retain voting shares of Piedmont Bancorp, Inc., and thereby indirectly retain voting shares of The Piedmont Bank, both in Norcross, Georgia.

B. Federal Reserve Bank of Chicago (Colette A. Fried, Assistant Vice President) 230 South LaSalle Street, Chicago, Illinois 60690–1414:

1. *Washington Bancorp Employee Stock Ownership Plan,* Washington, Iowa; to retain control of voting shares of Washington Bancorp, and thereby indirectly retain control of Federation Bank, both in Washington, Iowa.

Board of Governors of the Federal Reserve System, June 11, 2013.

Margaret McCloskey Shanks,

Deputy Secretary of the Board.

[FR Doc. 2013–14161 Filed 6–13–13; 8:45 am]

BILLING CODE 6210–01–P

FEDERAL RESERVE SYSTEM

Formations of, Acquisitions by, and Mergers of Bank Holding Companies

The companies listed in this notice have applied to the Board for approval, pursuant to the Bank Holding Company Act of 1956 (12 U.S.C. 1841 *et seq.*) (BHC Act), Regulation Y (12 CFR Part 225), and all other applicable statutes and regulations to become a bank holding company and/or to acquire the assets or the ownership of, control of, or the power to vote shares of a bank or bank holding company and all of the banks and nonbanking companies owned by the bank holding company, including the companies listed below.

The applications listed below, as well as other related filings required by the Board, are available for immediate inspection at the Federal Reserve Bank indicated. The applications will also be available for inspection at the offices of the Board of Governors. Interested

persons may express their views in writing on the standards enumerated in the BHC Act (12 U.S.C. 1842(c)). If the proposal also involves the acquisition of a nonbanking company, the review also includes whether the acquisition of the nonbanking company complies with the standards in section 4 of the BHC Act (12 U.S.C. 1843). Unless otherwise noted, nonbanking activities will be conducted throughout the United States.

Unless otherwise noted, comments regarding each of these applications must be received at the Reserve Bank indicated or the offices of the Board of Governors not later than July 11, 2013.

A. Federal Reserve Bank of Kansas City (Dennis Denney, Assistant Vice President) 1 Memorial Drive, Kansas City, Missouri 64198–0001:

1. *Grand Bancorp, Inc.,* Grove, Oklahoma; to become a bank holding company by acquiring 100 percent of the voting shares of Grand Savings Bank, Grove, Oklahoma.

Board of Governors of the Federal Reserve System, June 11, 2013.

Margaret McCloskey Shanks,

Deputy Secretary of the Board.

[FR Doc. 2013–14162 Filed 6–13–13; 8:45 am]

BILLING CODE 6210–01–P

FEDERAL TRADE COMMISSION

Granting of Request for Early Termination of the Waiting Period Under the Premerger Notification Rules

Section 7A of the Clayton Act, 15 U.S.C. 18a, as added by Title II of the Hart-Scott-Rodino Antitrust Improvements Act of 1976, requires persons contemplating certain mergers or acquisitions to give the Federal Trade Commission and the Assistant Attorney General advance notice and to wait designated periods before consummation of such plans. Section 7A(b)(2) of the Act permits the agencies, in individual cases, to terminate this waiting period prior to its expiration and requires that notice of this action be published in the **Federal Register**.

The following transactions were granted early termination—on the dates indicated—of the waiting period provided by law and the premerger notification rules. The listing for each transaction includes the transaction number and the parties to the transaction. The grants were made by the Federal Trade Commission and the Assistant Attorney General for the Antitrust Division of the Department of Justice. Neither agency intends to take any action with respect to these proposed acquisitions during the applicable waiting period.

EARLY TERMINATIONS GRANTED MAY 1, 2013 THRU MAY 31, 2013

05/01/2013		
20130769	G	Frazier Healthcare VI, L.P.; AmerisourceBergen Corporation; Frazier Healthcare VI, L.P.
20130800	G	Atlas Pipeline Partners, L.P.; Natural Gas Partners IX, L.P.; Atlas Pipeline Partners, L.P.
05/02/2013		
20130768	G	Golden Gate Capital Opportunity Fund, L.P.; Springs Industries, Inc.; Golden Gate Capital Opportunity Fund, L.P.
20130798	G	General Electric Company; Lufkin Industries, Inc.; General Electric Company.
05/03/2013		
20130783	G	Curt Richardson; Gary A. and Sophia Rayner; Curt Richardson.
20130792	G	Marcato, L.P.; Lear Corporation; Marcato, L.P.
05/06/2013		
20130795	G	Three-Twenty-Three Family Holdings, LLC; American Greetings Corporation; Three-Twenty-Three Family Holdings, LLC.
20130812	G	Mitsui Chemicals, Inc.; Heraeus Holding GmbH; Mitsui Chemicals, Inc.
20130813	G	TPG Partners VI, L.P.; Advent Software, Inc.; TPG Partners VI, L.P.
05/07/2013		
20130810	G	Madison Dearborn Capital Partners VI–A, L.P.; National Financial Partners Corp.; Madison Dearborn Capital Partners VI–A, L.P.
05/10/2013		
20130779	G	Kaluz, S.A. de CV.; PolyOne Corporation; Kaluz, S.A. de C.V.
20130815	G	Reuben Mark; Cabela's Incorporated; Reuben Mark.
05/13/2013		
20130818	G	The NASDAQ OMX Group, Inc.; Howard W. Lutnick; The NASDAQ OMX Group, Inc.
05/14/2013		
20130811	G	Post Holdings, Inc.; Hearthside Holdco, LLC; Post Holdings, Inc.
05/15/2013		
20130805	G	Sinclair Broadcast Group, Inc.; Fisher Communications, Inc.; Sinclair Broadcast Group, Inc.
20130824	G	Catholic Health Initiatives; St. Luke's Episcopal Health System Corporation; Catholic Health Initiatives.

EARLY TERMINATIONS GRANTED MAY 1, 2013 THRU MAY 31, 2013—Continued

20130831	G	Berkshire Hathaway Inc.; DaVita HealthCare Partners Inc.; Berkshire Hathaway Inc.
05/17/2013		
20130807	G	KPS Special Situations Fund III (Supplemental), L.P.; KIPB Group Holdings, Inc.; KPS Special Situations Fund III (Supplemental), L.P.
20130808	G	KPS Special Situations Fund III (Supplemental), L.P.; Wausau Paper Corp.; KPS Special Situations Fund III (Supplemental), L.P.
20130822	G	General Electric Company; George Salof; General Electric Company.
20130832	G	Olympus Growth Fund V, L.P.; Sajjad Ebrahim; Olympus Growth Fund V, L.P.
20130833	G	SemGroup Corporation; Chesapeake Energy Corporation; SemGroup Corporation.
20130838	Y	Huntsman Gay Capital Partners Fund, L.P.; MyWebGrocer, Inc.; Huntsman Gay Capital Partners Fund, L.P.
20130852	G	Birch Hill Equity Partners (US) IV, LP; Softchoice Corporation; Birch Hill Equity Partners (US) IV, LP.
20130853	G	Avista Capital Partners III, L.P.; Telular Corporation; Avista Capital Partners III, L.P.
05/20/2013		
20130847	G	MMIC Group, Inc.; Utah Medical Insurance Association; MMIC Group, Inc.
05/21/2013		
20130840	G	ABB Ltd.; Power-One, Inc.; ABB Ltd.
05/22/2013		
20130849	G	Bridgepoint Europe IV Investments (2) S.a.r.l.; Eurazeo; Bridgepoint Europe IV Investments (2) S.a.r.l.
05/23/2013		
20130809	Y	Littelfuse, Inc.; Crestview Partners, L.P.; Littelfuse, Inc.
05/24/2013		
20130284	G	Cinemark Holdings, Inc.; TowerBrook Investors III, L.P.; Cinemark Holdings, Inc.
20130802	G	AgGen Liberty Holdings LLC; Genworth Financial, Inc.; AgGen Liberty Holdings LLC.
20130839	G	Li & Fung Limited; Kenneth J. Whalen; Li & Fung Limited.
20130856	G	Fifth Street Finance Corp.; Healthcare Finance Group, LLC; Fifth Street Finance Corp.
20130857	G	Trulia, Inc.; Market Leader, Inc.; Trulia, Inc.
20130858	G	Onex Partners III LP; Valcon Acquisition Holding (Luxembourg) S.a.r.l.; Onex Partners III LP.
20130859	G	Chef Holdings, Inc.; Littlejohn Fund III, L.P.; Chef Holdings, Inc.
20130860	G	Boxer Parent Company Inc.; BMC Software, Inc.; Boxer Parent Company Inc.
20130863	G	Temasek Holdings (Private) Limited; Michael G. Rubin; Temasek Holdings (Private) Limited.
20130865	G	CCP IX LP No. 1; ARMACELL LIMITED; CCP IX LP No. 1.
20130868	G	Herff Jones, Inc.; Sage Parent Company, Inc.; Herff Jones, Inc.
20130875	G	Eastman Kodak Company; Eastman Kodak Company; Eastman Kodak Company.
05/28/2013		
20130871	G	Elon Musk; Tesla Motors, Inc.; Elon Musk.
05/29/2013		
20130825	G	RoundTable Healthcare Partners III, L.P.; GlaxoSmithKline plc; RoundTable Healthcare Partners III, L.P.
20130855	G	The Resolute Fund II Maritime Partnership, L.P.; Joel N. Broussard; The Resolute Fund II Maritime Partnership, L.P.
20130861	G	AT&T Inc.; Lake Mobility LLC; AT&T Inc.
05/30/2013		
20130841	G	Heico Corporation; The Resolute Fund L.P.; Heico Corporation.
20130862	G	TransDigm Group Incorporated; Trust u/Article EIGHT of the L/W/T of Daniel Berlin 4/29/09; TransDigm Group Incorporated.
20130877	G	Capstone Mining Corp.; BHP Billiton Limited; Capstone Mining Corp.
05/31/2013		
20130546	G	Partners HealthCare System, Inc.; Cooley Dickinson Health Care Corporation; Partners HealthCare System, Inc.
20130888	G	Hi-Crush Proppants LIC; D & I Silica, LLC; Hi-Crush Proppants LIC.

FOR FURTHER INFORMATION CONTACT: Renee Chapman, Contact Representative, or Theresa Kingsberry, Legal Assistant, Federal Trade Commission, Premerger Notification Office, Bureau of Competition, Room H–303, Washington, DC 20580, (202) 326–3100.

By Direction of the Commission.

Donald S. Clark,

Secretary.

[FR Doc. 2013–14105 Filed 6–13–13; 8:45 am]

BILLING CODE 6750–01–M

DEPARTMENT OF HEALTH AND HUMAN SERVICES

Centers for Disease Control and Prevention

[30-Day–13–13JI]

Agency Forms Undergoing Paperwork Reduction Act Review

The Centers for Disease Control and Prevention (CDC) publishes a list of information collection requests under review by the Office of Management and Budget (OMB) in compliance with the Paperwork Reduction Act (44 U.S.C. Chapter 35). To request a copy of these requests, call (404) 639–7570 or send an email to *omb@cdc.gov.* Send written comments to CDC Desk Officer, Office of Management and Budget, Washington, DC 20503 or by fax to (202) 395–5806. Written comments should be received within 30 days of this notice.

Proposed Project

Virtual Reality to Train and Assess Emergency Responders—New—National Institute for Occupational Safety and Health (NIOSH), Centers for Disease Control and Prevention (CDC).

Background and Brief Description

NIOSH, under Public Law 91–173 as amended by Public Law 95–164 (Federal Mine Safety and Health Act of 1977), and Public Law 109–236 (Mine Improvement and New Emergency Response Act of 2006) has the responsibility to conduct research to improve working conditions and to prevent accidents and occupational diseases in underground coal and metal/nonmetal mines in the U.S.

The turn of the 21st century started with much promise for the coal mining industry. Because there was only one underground disaster in the 1990s, it seemed that emergency response in the United States no longer needed to be a top research priority. However, major coal mine disasters between 2001 and 2010 have resulted in 65 fatalities. These events highlighted the critical need to balance investments to reduce low probability/high severity events with those that focus on frequent, but less severe injuries and illnesses.

The present research project seeks to determine optimal use of virtual reality (VR) technologies for training and assessing mine emergency responders using the Mine Rescue and Escape Training Laboratory (MRET Lab). Responders include specially trained individuals, such as mine rescue or fire brigade team members, and also managers and miners who may either be called upon to respond to an emergency situation or engage in self-protective actions in response to an emergency. This project is a step toward determining how new immersive virtual reality technologies should be used for miner training and testing in the US. The project objective will be achieved through specific aims in two related areas as illustrated below.

Training Assessment

1. Evaluate four training modules.
2. Evaluate participant reactions.
3. Develop guidelines.

Training Development

4. Use 3D technologies to develop a prototype for a mine rescue closed-circuit breathing apparatus (e.g., Dräger BG4).

To accomplish these goals over the life of the project, researchers will utilize a variety of data collection strategies, including self-report pre-and post-test instruments for assessing trainee reaction and measuring learning. Data collection will take place with approximately 150 underground coal miners over three years. The respondents targeted for this study include rank-and-file miners, mine rescue team members, and mine safety and health professionals. A sample of 150 individuals will be collected from various mining operations and mine rescue teams which have agreed to participate. All participants will be between the ages of 18 and 65, currently employed, and living in the United States. Findings will be used to improve the safety and health of underground coal miners by assessing the efficacy of immersive VR environments for teaching critical mine safety and health skills.

To assess learning as a result of training, each participant will complete a pre-training questionnaire, a post-simulation questionnaire, and a post-training questionnaire. Participants evaluating the closed-circuit breathing apparatus training will only complete a version of the pre-training questionnaire. There is no cost to respondents other than their time. The total estimated annual burden hours are 32.

ESTIMATED ANNUALIZED BURDEN HOURS

Type of respondent	Form name	Number of respondents	Number responses per respondent	Average burden per response (in hours)
Dräger BG4 participants (i.e., closed circuit breathing apparatus training participants).	Pre-Training Questionnaire	30	1	3/60
Mine Rescue participants	Pre-Training Questionnaire	60	1	3/60
	Post-Simulation Questionnaire	60	1	3/60
	Post-Training Questionnaire	60	1	3/60
Mine Escape participants	Pre-Training Questionnaire	60	1	3/60
	Post-Simulation Questionnaire	60	1	3/60
	Post-Training Questionnaire	60	1	3/60
Mine Escape/Longwall Mining participants	Pre/Post-Training Knowledge Test	30	1	6/60
Mine Escape/Continuous Mining participants	Pre/Post-Training Knowledge Test	30	1	6/60
Mine Rescue/Longwall Mining participants	Pre/Post-Training Knowledge Test	30	1	6/60
Mine Rescue/Continuous Mining participants	Pre/Post-Training Knowledge Test	30	1	6/60

Ron A. Otten,

Director, Office of Scientific Integrity, Office of the Associate Director for Science, Office of the Director, Centers for Disease Control and Prevention.

[FR Doc. 2013–14152 Filed 6–13–13; 8:45 am]

BILLING CODE 4163–18–P

DEPARTMENT OF HEALTH AND HUMAN SERVICES

Centers for Disease Control and Prevention

[60 Day–13–0890]

Proposed Data Collections Submitted for Public Comment and Recommendations

In compliance with the requirement of Section 3506(c)(2)(A) of the Paperwork Reduction Act of 1995 for opportunity for public comment on proposed data collection projects, the Centers for Disease Control and Prevention (CDC) will publish periodic summaries of proposed projects. To request more information on the proposed projects or to obtain a copy of the data collection plans and instruments, call 404–639–7570 or send comments to Ron Otten, 1600 Clifton Road, MS–D74, Atlanta, GA 30333 or send an email to *omb@cdc.gov.*

Comments are invited on: (a) Whether the proposed collection of information is necessary for the proper performance of the functions of the agency, including whether the information shall have practical utility; (b) the accuracy of the agency's estimate of the burden of the proposed collection of information; (c) ways to enhance the quality, utility, and clarity of the information to be collected; and (d) ways to minimize the burden of the collection of information on respondents, including through the use of automated collection techniques or other forms of information technology. Written comments should be received within 60 days of this notice.

Proposed Project

HIV/AIDS Awareness Day Program—Extension—National Center for HIV/AIDS, Viral Hepatitis, STD, and Tuberculosis Prevention (NCHHSTP), Centers for Disease Control and Prevention (CDC).

Background and Brief Description

CDC is requesting Office of Management and Budget (OMB) approval of a 3-year extension to administer surveys to respondents who plan HIV/AIDS day awareness activities during the next 3 years. The name and dates for the annual HIV/AIDS awareness day campaigns are: National Black HIV Awareness Day—February 7th; National Native HIV/AIDS Awareness Day—March 20th; National Asian and Pacific Islander HIV/AIDS Awareness Day—May 19th; and National Latino AIDS Awareness Day—October 15th. The purpose of the surveys is to assess the number and types of HIV/AIDS prevention activities planned and implemented in observance of each of the four noted HIV/AIDS awareness day campaigns. This extension is required to continue the work of HIV/AIDS in among the African American, Native American, Latino, and Asian Pacific Islander populations. Each of the awareness days have reached a landmark year. This has been done through national outreach and mobilization efforts towards their targeted populations as well as awareness to the general population about HIV/AIDS issues that impact their communities.

The importance of each day has been demonstrated in reaching beyond traditional audience. This has been done by collaborating with agencies and organizations who serve the public health in areas affected by HIV/AIDS. A more proactive role has been shared between each of the planning committees and the communities they serve. Testing and linkage to care has been a staple for each of the days. Also, each of the groups has fully used online resources to provide information and network with individuals and groups to help with their perspective cause(s).

After the date that each campaign occurs, the event planners will be asked to respond to a computer-based survey to collect qualitative data. They will go to the designated Web sites to review information about the campaigns and go to the section that allows them to enter information about their particular event. For example, the event planners will be asked to note the kind of events that they planned. The survey results are necessary to understand how and where HIV/AIDS awareness activities are planned and implemented.

These survey results will provide important information that will be used to develop HIV/AIDS prevention activities. The computer-based surveys take up to one hour. The surveys and are one-time only and will not require a follow-up. There is no cost to the respondents other than their time.

ESTIMATED ANNUALIZED BURDEN HOURS

Respondents	Form name	Number of respondents	Number of responses per respondent	Average burden per response (in hours)	Total burden (in hours)
African-American HIV/AIDS awareness day activity planners.	National Black HIV/AIDS Awareness Day Evaluation Report.	200	1	1	200
Asian and Pacific Islander HIV/AIDS awareness day activity planners.	National Asian & Pacific Islander HIV/AIDS Awareness Day Evaluation Report.	15	1	1	15
Latino HIV/AIDS awareness day activity planners.	National Latino AIDS Awareness Day Evaluation Report.	125	1	1	125
Native HIV/AIDS awareness day activity planners.	National Native HIV/AIDS Awareness Day Evaluation Report.	35	1	1	35
Total					375

Ron A. Otten,

Director, Office of Scientific Integrity, Office of the Associate Director for Science, Office of the Director, Centers for Disease Control and Prevention.

[FR Doc. 2013–14156 Filed 6–13–13; 8:45 am]

BILLING CODE 4163–18–P

DEPARTMENT OF HEALTH AND HUMAN SERVICES

Centers for Disease Control and Prevention

[Docket Number CDC–2013–0008; NIOSH–234]

National Institute for Occupational Health (NIOSH)—Certified B Readers; Training and Testing

AGENCY: National Institute for Occupational Safety and Health (NIOSH) of the Centers for Disease Control and Prevention (CDC), Department of Health and Human Services (HHS).

ACTION: Request for information and comment on priority knowledge and competency items to address in training and testing of National Institute for Occupational Health (NIOSH)—certified B Readers.

SUMMARY: The National Institute for Occupational Safety and Health (NIOSH) of the Centers for Disease Control and Prevention (CDC, is requesting information from stakeholders and the general public to identify and prioritize competencies currently needed by B Readers. The information obtained will be used in the development of the new digital B Reader program, including training and examinations.

DATES: Electronic or written comments must be received by August 13, 2013.

ADDRESSES: You may submit comments, identified by CDC–2013–0008 and NIOSH–234, by any of the following methods:

- *Federal eRulemaking Portal: http://www.regulations.gov*. Follow the instructions for submitting comments.
- *Mail:* NIOSH Docket Office, Robert A. Taft Laboratories, MS–C34, 4676 Columbia Parkway, Cincinnati, OH 45226.

All information received in response to this notice must include the agency name and docket number (CDC–2013–0008; NIOSH–234). All relevant comments received will be posted without change to *www.regulations.gov,* including any personal information provided. To view the notice and related materials, visit *http://www.regulations.gov* and enter CDC–2013–0008 in the search field and click ''Search.''

FOR FURTHER INFORMATION CONTACT: Simone Tramma, MD, MS, 1600 Clifton Road NE. MS E20, Atlanta, GA 30329–4018, telephone 404–498–0197.

Background

Chest radiography is a widely applied and important tool for assessing lung health in clinical care, surveillance, research and hazard evaluations of workers exposed to respirable silica, asbestos, coal, beryllium, and other hazardous dusts. Collectively, these dust-induced diseases are called pneumoconioses. The International Labour Office (ILO) International Classification of Radiographs of Pneumoconioses provides a standardized system for classification of chest radiographs that has been widely used by physicians and epidemiologic researchers in the investigation of work-related respiratory hazards. For the last four decades, NIOSH has been training physicians and certifying competence in the use of the ILO system to classify film-based chest radiographs. Physicians who pass a rigorous standardized examination offered by NIOSH are designated as B Readers.

Recently, the ILO system was updated to allow the use of digital chest images instead of analog chest radiographs. Similarly, NIOSH updated its Coal Workers' Health Surveillance Program to allow use of digital chest images. In follow up, NIOSH is now working to update its B Reader training and certification program by developing digital-format training materials and examinations.

Core knowledge and competencies to be addressed in an updated digital-format B Reader training and certification program might include the following:

I—Knowledge

Understand the following:

1. The different types of radiographic abnormalities that are or may be associated with dust exposure.
2. The intention, format, and mechanics of the ILO classification system, including:
   (a) When to use the classification and what abnormalities should be classified
   (b) How the ILO defines abnormalities for parenchymal and pleural disease
   (c) The meaning of profusion and how to use major/minor profusion categories properly
   (d) The nature and use of standard films/images in classification
3. Where to find information about how to apply the ILO system.
4. Where to find information on the NIOSH B Reader system.
5. Ethical approaches to classifying radiographs, including:
   (a) The responsibilities of the reader in communicating with worker, agency, lawyer, employer readers
6. The effects of technical defects on the appearances covered in the classification.

II—Skills

Ability to accurately and reliably identify and categorize the following according to the ILO classification system:

1. Image quality
   (a) Unreadable images
   (b) Defects in image quality that may affect its classification
2. Normal radiographs
   (a) Borderline normal
3. Small nodular opacities
   (a) High profusion
   (b) Low profusion
   (c) Reliably classifying profusion as 1/0 or greater; or 0/1 or less.
4. Small linear/irregular opacities
   (a) High profusion
   (b) Low profusion
   (c) Reliably classifying profusion as 1/0 or greater; or 0/1 or less
5. Reliable classification of Large Opacities
   (a) Reliably classify presence of large opacities
   (b) Reliably classify category of large opacities
6. Pleural disease
   (a) Plaque and diffuse
   (b) Calcifications
   (c) Costophrenic angle obliteration
   (d) Locations
7. Be able to identify and differentiate:
   1. Large opacities and confluence of small opacities (ax) lesions
   2. Cancer (ca) and pulmonary tuberculosis (tb) lesions

Information Needs

Additional data and information are needed to assist NIOSH in determining the knowledge elements and competencies that should be included in B Reader training and certification and how they should be prioritized for emphasis in training and certification testing. Information is particularly needed in response to the following questions:

(1) What knowledge elements and competencies are essential for a B Reader?

(2) What are the most critical knowledge elements and competencies to identify in the B Reader certification and re-certification examinations?

(3) What are the key functions of the B Reader certification and re-certification examinations grading system, and how should the examinations be graded to accomplish those functions? Should the general approach currently used for grading [1 2] be changed and if yes, how and why?

(4) Should NIOSH consider alternative approaches to maintenance of B Reader certification besides recertification examinations every 4 years? If so, what alternative approaches would be both effective and desirable?

(5) NIOSH seeks to obtain materials, including published and unpublished reports and research findings that will help to answer these questions. NIOSH encourages respondents to provide these materials.

References

1. Morgan RH [1979].Proficiency Examination of Physicians for Classifying Pneumoconiosis Chest Films. AJR 132: 803–808.
2. Wagner GR, Attfield MD, Kennedy RD, Parker JE [1992]. The NIOSH B Reader Certification Program-An Update Report. J Occup Med 34(9):879–84.

Dated June 7, 2013.

John Howard,

Director, National Institute for Occupational Safety and Health, Centers for Disease Control and Prevention.

[FR Doc. 2013–14147 Filed 6–13–13; 8:45 am]

BILLING CODE 4163–19–P

DEPARTMENT OF HEALTH AND HUMAN SERVICES

Centers for Disease Control and Prevention

Statement of Organization, Functions, and Delegations of Authority

Part C (Centers for Disease Control and Prevention) of the Statement of Organization, Functions, and Delegations of Authority of the Department of Health and Human Services (45 FR 67772–76, dated October 14, 1980, and corrected at 45 FR 69296, October 20, 1980, as amended most recently at 78 FR 30307–30312, dated May 22, 2013) is amended to reorganize the Office of the Associate Director for Science, Office of the Director, Centers for Disease Control and Prevention, and to revise the functional statement for the Office of Scientific Integrity, Office of the Director, National Center for Immunization and Respiratory Diseases.

Section C–B, Organization and Functions, is hereby amended as follows:

Delete in its entirety the functional statement for the Office of the Director (CAS1), Office of the Associate Director for Science (CAS), and insert the following:

Office of the Director (CAS1). (1) Directs, manages, and coordinates the activities of the OADS; (2) develops goals and objectives, provides leadership, policy formation, scientific oversight, and guidance in program planning and development; and (3) oversees functions of Office of Science Quality, Office of Scientific Integrity, Office of Technology and Innovation, and Special Projects Activity.

After the title and function statement for the Office of Scientific Integrity (CASJ), Office of the Associate Director for Science (CAS), insert the following:

Office of Technology and Innovation (CASK). (1) Promotes and facilitates the development of technology and innovation throughout the spectrum of scientific discovery; (2) provides leadership and expertise to promote and effect the timely transfer of knowledge and technology for development of products and processes that improve public health; (3) manages CDC's intellectual property (e.g., patents, trademarks, copyrights) and promotes the transfer of new technology from CDC research to the private sector; (4) leads, develops, coordinates, and manages policies and/or activities that assure CDC intellectual property transfer, scientific training and technical assistance; (5) champions and facilitates innovation, collaborations and technology transfers among federal scientists, laboratories, academia and industry; (6) provides leadership and oversight for innovation activities that have the potential to transform the way that CDC and the private sector improve the public's health; (7) provides consultation and advice to the CDC Office of the Director, Centers/Institute/Offices, and programs related to technology transfer and innovation; and (8) maintains regular, open, and responsive communication with the CDC science community and other key partners including CDC Office of General Council, National Institute of Health, Department of Health and Human Services and United States Patent and Trademark Office.

Delete in its entirety the functional statement for the Office of Laboratory Science (CVG14), Office of the Director (CVG1), National Center for Immunization and Respiratory Diseases (CVG), and insert the following:

Office of Laboratory Science (CVG14). (1) Provides leadership, expertise and service in laboratory science; (2) represents NCIRD's interests in cross-cutting laboratory services in OID which include, but are not limited to, laboratory information systems, quality management systems and bioinformatics; (3) ensures a safe working environment in NCIRD laboratories; and (4) collaborates effectively with other centers and offices in carrying out its functions.

Dated: June 6, 2013.

Sherri A. Berger,

Chief Operating Officer, Centers for Disease Control and Prevention.

[FR Doc. 2013–14165 Filed 6–13–13; 8:45 am]

BILLING CODE 4163–18–M

DEPARTMENT OF HEALTH AND HUMAN SERVICES

Centers for Medicare & Medicaid Services

[Document Identifiers CMS–10482]

Agency Information Collection Activities: Proposed Collection; Comment Request

AGENCY: Centers for Medicare & Medicaid Services.

ACTION: Notice.

SUMMARY: The Centers for Medicare & Medicaid Services (CMS) is announcing an opportunity for the public to comment on CMS' intention to collect information from the public. Under the Paperwork Reduction Act of 1995 (PRA), federal agencies are required to publish notice in the **Federal Register** concerning each proposed collection of information (including each proposed extension or reinstatement of an existing collection of information) and to allow 60 days for public comment on the proposed action. Interested persons are invited to send comments regarding our burden estimates or any other aspect of this collection of information, including any of the following subjects: (1) The necessity and utility of the proposed information collection for the proper performance of the agency's functions; (2) the accuracy of the estimated burden; (3) ways to enhance the quality, utility, and clarity of the information to be collected; and (4) the use of automated collection techniques or other forms of information technology to minimize the information collection burden.

DATES: Comments must be received by August 13, 2013:

ADDRESSES: When commenting, please reference the document identifier or OMB control number (OCN). To be assured consideration, comments and

recommendations must be submitted in any one of the following ways:

1. *Electronically.* You may send your comments electronically to *http://www.regulations.gov.* Follow the instructions for ''Comment or Submission'' or ''More Search Options'' to find the information collection document(s) that are accepting comments.

2. *By regular mail.* You may mail written comments to the following address: CMS, Office of Strategic Operations and Regulatory Affairs, Division of Regulations Development, Attention: Document Identifier/OMB Control Number_____, Room C4–26–05, 7500 Security Boulevard, Baltimore, Maryland 21244–1850.

To obtain copies of a supporting statement and any related forms for the proposed collection(s) summarized in this notice, you may make your request using one of following:

1. Access CMS' Web site address at *http://www.cms.hhs.gov/PaperworkReductionActof1995.*

2. Email your request, including your address, phone number, OMB number, and CMS document identifier, to *Paperwork@cms.hhs.gov.*

3. Call the Reports Clearance Office at (410) 786–1326.

FOR FURTHER INFORMATION CONTACT: Call the Reports Clearance Office at (410) 786–1326.

SUPPLEMENTARY INFORMATION:

This notice sets out a summary of the use and burden associated with the following information collections. More detailed information can be found in each collection's supporting statement and associated materials (see **ADDRESSES**).

CMS–10482 Evaluation of the Physician Quality Reporting System (PQRS) and Electronic Prescribing (eRx) Incentive Program

Under the Paperwork Reduction Act of 1995 (PRA) (44 U.S.C. 3501–3520), federal agencies must obtain approval from the Office of Management and Budget (OMB) for each collection of information they conduct or sponsor. The term ''collection of information'' is defined in 44 U.S.C. 3502(3) and 5 CFR 1320.3(c) and includes agency requests or requirements that members of the public submit reports, keep records, or provide information to a third party. Section 3506(c)(2)(A) of the PRA requires federal agencies to publish a 60-day notice in the **Federal Register** concerning each proposed collection of information, including each proposed extension or reinstatement of an existing collection of information, before submitting the collection to OMB for approval. To comply with this requirement, CMS is publishing this notice.

Information Collection

1. *Type of Information Collection Request:* New Collection (Request for a new OMB control number); *Title of Information Collection:* Evaluation of the Physician Quality Reporting System (PQRS) and Electronic Prescribing (eRx) Incentive Program; *Use:* The Physician Quality Reporting System (PQRS) was first implemented in 2007 as an incentive for voluntary reporting of quality measures in accordance with a section of the Tax Relief and Health Care Act of 2006. The PQRS was further extended and enhanced by legislation such as the Medicare, Medicaid, and State Children's Health Insurance Program (SCHIP) Extension Act of 2007 (MMSEA) and the Medicare Improvements for Patients and Providers Act of 2008 (MIPPA). A number of changes have been made to the PQRS, including group measures, the group reporting option, and additional measures. The PQRS was extended further with the enactment of MMSEA. The MMSEA provided professionals greater flexibility for participating in the PQRS for 2008 and 2009 by authorizing us to establish alternative reporting criteria and alternative reporting periods for the reporting measures groups and for the submission of data on the PQRS quality measures through clinical data registries. The MIPPA, enacted in July 2008, made the PQRS program permanent, further enhanced the PQRS, and established a new standalone incentive program for successful electronic prescribers.

The eRx Incentive Program, the other program being evaluated in this project, was first implemented in 2009. The eRx is another incentive reporting program that uses a combination of incentive payments and payment adjustments to encourage eRx by eligible professionals. The program provides an incentive payment to practices with eligible professionals who successfully e-prescribe for covered Physician Fee Schedule services furnished to Medicare Part B Fee-For-Service (FFS) beneficiaries. Eligible professionals do not need to participate in PQRS to participate in the eRx Incentive Program.

In support of an evaluation the PQRS and the eRx Incentive Program, we will conduct three surveys. The surveys will include: Medicare beneficiaries, eligible professionals, and administrators. This evaluation is designed to determine how well the PQRS and the eRx Incentive Program are contributing to better and affordable health care for Medicare beneficiaries. The PQRS is a voluntary reporting program that provides an incentive payment to eligible professionals who satisfactorily report data on quality measures. We use quality measures to promote improvements in care delivery and payment and to increase transparency. The PQRS program rewards eligible professionals based on a percentage of the estimated Medicare Physician Fee Schedule of their allowed Part B charges if they meet the defined reporting requirements. The PQRS was initially referred to as the Physician Quality Reporting Initiative (PQRI). *Form Number:* CMS–10482 (OCN: 0938–NEW); *Frequency:* Yearly; *Affected Public:* Individuals and households, Business or other for-profit, Not-for-profit institutions; *Number of Respondents:* 6,350; *Total Annual Responses:* 6,350; *Total Annual Hours:* 2,545. (For policy questions regarding this collection contact Lauren Fuentes at 410–786–2290. For all other issues call 410–786–1326.)

Dated: June 11, 2013.

Martique Jones,

Deputy Director, Regulations Development Group, Office of Strategic Operations and Regulatory Affairs.

[FR Doc. 2013–14174 Filed 6–13–13; 8:45 am]

BILLING CODE 4120–01–P

DEPARTMENT OF HEALTH AND HUMAN SERVICES

Food and Drug Administration

[Docket No. FDA–2011–D–0790]

Food and Drug Administration Decisions for Investigational Device Exemption Clinical Investigations; Draft Guidance for Industry and Food and Drug Administration Staff; Availability

AGENCY: Food and Drug Administration, HHS.

ACTION: Notice.

SUMMARY: The Food and Drug Administration (FDA) is announcing the availability of the draft guidance entitled ''FDA Decisions for Investigational Device Exemption (IDE) Clinical Investigations.'' This guidance document was initially issued in draft on November 10, 2011, and was developed to promote the initiation of clinical investigations to evaluate medical devices under FDA's IDE regulations. The guidance was also intended to provide clarification

regarding the regulatory implications of the decisions that FDA may render based on review of an IDE and to provide a general explanation of the reasons for those decisions. This guidance has been revised and is being reissued for comment because the Food and Drug Administration Safety and Innovation Act (FDASIA), which became law on July 9, 2012, amended the Federal Food, Drug, and Cosmetic Act (the FD&C Act) to specify certain situations in which FDA cannot disapprove an IDE. This draft guidance is not final nor is it in effect at this time.

DATES: Although you can comment on any guidance at any time (see 21 CFR 10.115(g)(5)), to ensure that the Agency considers your comment on this draft guidance before it begins work on the final version of the guidance, submit either electronic or written comments on the draft guidance by September 12, 2013.

ADDRESSES: Submit written requests for single copies of the draft guidance document entitled ''FDA Decisions for Investigational Device Exemption (IDE) Clinical Investigations'' to the Division of Small Manufacturers, International, and Consumer Assistance, Center for Devices and Radiological Health, Food and Drug Administration, 10903 New Hampshire Ave., Bldg. 66, rm. 4613, Silver Spring, MD 20993–0002 or Office of Communication, Outreach and Development (HFM–40), Center for Biologics Evaluation and Research (CBER), Food and Drug Administration, 1401 Rockville Pike, suite 200N, Rockville, MD 20852–1448. Send one self-addressed adhesive label to assist that office in processing your request, or fax your request to 301–847–8149. See the **SUPPLEMENTARY INFORMATION** section for information on electronic access to the guidance.

Submit electronic comments on the draft guidance to *http://www.regulations.gov*. Submit written comments to the Division of Dockets Management (HFA–305), Food and Drug Administration, 5630 Fishers Lane, rm. 1061, Rockville, MD 20852. Identify comments with the docket number found in brackets in the heading of this document.

FOR FURTHER INFORMATION CONTACT: Owen Faris, Center for Devices and Radiological Health, Food and Drug Administration, 10903 New Hampshire Ave., Bldg. 66, Rm. 1108, Silver Spring, MD 20993–0002, 301–796–6356; or Stephen Ripley, Center for Biologics Evaluation and Research, Food and Drug Administration, 1401 Rockville Pike, suite 200N, Rockville, MD 20852, 301–827–6210.

SUPPLEMENTARY INFORMATION:

I. Background

FDA approval of an IDE submission allows the initiation of a clinical investigation of a significant risk device. This guidance is intended to provide clarification regarding the regulatory implications of the decisions that FDA may render based on review of an IDE and to provide a general explanation of the reasons for those decisions. In an effort to promote timely initiation of enrollment in clinical investigations in a manner that protects study subjects, FDA has developed methods to allow a clinical investigation of a device to begin under certain circumstances, even when there are outstanding issues regarding the IDE submission. These mechanisms, including approval with conditions, staged approval, and communication of outstanding issues related to the IDE through study design considerations and future considerations, are described in this guidance.

FDA has traditionally referred to IDE approvals that have conditions as ''conditional approvals.'' FDA believes that the term ''approval with conditions'' is more appropriate because the term conveys that the IDE has been approved and the study may begin without awaiting further FDA review. An IDE may be approved with conditions if FDA has determined that, despite outstanding issues, the information provided is sufficient to justify human clinical evaluation of the device and the proposed study design is acceptable with regard to protection of study subjects.

FDA may now also communicate ''future considerations'', which are issues and recommendations that FDA believes the sponsor should consider in preparation for a marketing application or a future clinical investigation. Future considerations are intended to provide helpful, non-binding advice to sponsors regarding important elements of the future application that the IDE may not specifically address. FDA is considering whether future considerations should be communicated in our IDE decision letters or whether they should be sent to the sponsor in a separate communication. The Agency is specifically seeking comment on this issue.

Consistent with the November 2011 draft guidance, this guidance also proposes two other mechanisms for approving studies or approving studies with conditions: ''Staged approval'' and ''staged approval with conditions,'' by which FDA may grant IDE approval or approval with conditions, while certain outstanding questions are answered concurrent with enrollment of a limited number of subjects in the clinical investigation. Staged approval and staged approval with conditions permit the clinical investigation to begin in a timely manner while maintaining appropriate subject protections. Staged approval or staged approval with conditions is most common for pivotal studies in which many subjects will be enrolled over an extended period of time, but may be applicable to other clinical investigations as well.

Section 601 of FDASIA amended section 520(g) of the FD&C Act (21 U.S.C. 360j(g)) to specify certain situations in which FDA cannot disapprove an IDE. Section 520(g)(4)(C) of the FD&C Act states that, consistent with section 520(g)(1), FDA shall not disapprove an IDE because: (1) The investigation may not support a substantial equivalence or de novo classification determination or approval of the device; (2) the investigation may not meet a requirement, including a data requirement, relating to the approval or clearance of a device; or (3) an additional or different investigation may be necessary to support clearance or approval of the device. The draft guidance has been revised in light of this new provision and to introduce the communication to the sponsor of study design-related issues. If FDA believes that additional modifications to the study design are needed, which are unrelated to subject safety, for the study design to be adequate and ultimately support a marketing application, if that is the intent of the sponsor, these suggested modifications will be noted in the ''study design considerations'' section of FDA's letter. Sponsors are not required to modify the investigational plan to address study design considerations. However, if these considerations are not addressed, the study design may not support the study goals (e.g., a future marketing application). FDA is considering whether study design considerations should be communicated in our IDE decision letters or whether they should be sent to the sponsor in a separate communication. The Agency is specifically seeking comment on this issue.

Section 601 of FDASIA specifies certain situations in which FDA cannot disapprove an IDE. However, the Agency recognizes that some IDE sponsors may wish to determine whether the pivotal study design may support a marketing application if it is successfully executed and meets its stated endpoints without raising unforeseen safety concerns. To meet this

interest, FDA is proposing a new, voluntary program intended to encourage device manufacturers to engage with the Agency in the development of trial designs that may support a marketing approval or clearance. The Agency recognizes that this type of voluntary program will not likely be suitable for all IDE sponsors and does not intend that this program become a routine step prior to submission of an IDE. This program is not intended to replace or be a substitute for the Pre-Submission process (Refer to the draft guidance entitled ''Medical Devices: The Pre-Submission Program and Meetings with FDA Staff'' (*http://www.fda.gov/MedicalDevices/DeviceRegulationandGuidance/GuidanceDocuments/ucm310375.htm,* which, when finalized, will represent FDA's current thinking on this topic).

This program, referred to as the ''Pre-Decisional IDE Process,'' is a voluntary approach to enable sponsors to obtain timely feedback from review staff on a near-final IDE application, with the opportunity for a midcycle interaction with the review team to promote clearer understanding and quicker resolution of major issues with device or subject safety as well as study design. The Pre-Decisional IDE process is different from the Pre-Submission process, which is appropriate for focused discussions with FDA early in device development or when nonclinical testing is underway. Pre-Submission discussions are generally limited in nature, as they focus on the proposed protocol and the specific questions for which the sponsor is requesting FDA feedback. Additionally, FDA does not typically review data from nonclinical bench, animal, or other studies when providing feedback on a clinical study protocol as part of a Pre-Submission. In contrast, Pre-Decisional IDEs will include data and full study protocols and reports where appropriate, and will be reviewed in a similar manner as an IDE, allowing for more complete and meaningful feedback from review staff. FDA intends to adhere to the feedback and decisions reached during the Pre-Decisional IDE review. FDA intends that modifications to our feedback will be limited to situations in which FDA concludes that the feedback given previously does not adequately address important issues materially relevant to a determination of safety or effectiveness that have been identified since the time of the Pre-Decisional IDE. In such cases, FDA should acknowledge a change in our advice, document the rationale for the change, and support the determination with appropriate management concurrence.

Although this process, as proposed, would occur over a 65-day timeframe (from submission of the Pre-Decisional IDE to complete FDA feedback, inclusive of the midcycle interaction), FDA believes that this process could result in faster approval without conditions of IDE submissions with study designs that are sufficiently robust to support market approval or clearance. Currently, many IDE submissions are approved with conditions only after an initial disapproval and submission of one or more responses, and may remain approved with conditions over many months while the outstanding issues are addressed. The Pre-Decisional IDE process is intended to reach an unconditional approval more quickly, and will help to address several commonly reported challenges in the initiation of clinical trials, such as delays in institutional review board approvals and reimbursement from third-party payers. In addition to seeking comments on the revised draft guidance as a whole, the Agency is specifically seeking comment on this new proposed program, as outlined in section 10 of the guidance.

As a result of this draft guidance, FDA, where appropriate, seeks to offer flexibility in how outstanding issues can be addressed to allow clinical investigations to commence without unnecessary delay, while ensuring that human subjects are adequately protected.

FDA issued this guidance document as draft on November 10, 2011. The Agency has considered the comments received during the comment period and incorporated modifications, as appropriate. This guidance has also been revised to reflect the changes to the FD&C Act described in this document and is being reissued in draft in order to solicit comment on these significant revisions.

II. Significance of Guidance

This draft guidance is being issued consistent with FDA's good guidance practices regulation (21 CFR 10.115). The draft guidance, when finalized, will represent the Agency's current thinking on FDA decisions for IDE clinical investigations. It does not create or confer any rights for or on any person and does not operate to bind FDA or the public. An alternative approach may be used if such approach satisfies the requirements of the applicable statute and regulations.

III. Electronic Access

Persons interested in obtaining a copy of the draft guidance may do so by using the Internet. A search capability for all Center for Devices and Radiological Health guidance documents is available at *http://www.fda.gov/MedicalDevices/DeviceRegulationandGuidance/GuidanceDocuments/default.htm.* Guidance documents are also available at *http://www.regulations.gov.* To receive ''FDA Decisions for Investigational Device Exemption (IDE) Clinical Investigations,'' you may either send an email request to *dsmica@fda.hhs.gov* to receive an electronic copy of the document or send a fax request to 301–847–8149 to receive a hard copy. Please use the document number 1783 to identify the guidance you are requesting.

IV. Paperwork Reduction Act of 1995

This draft guidance refers to previously approved collections of information found in FDA regulations. These collections of information are subject to review by the Office of Management and Budget (OMB) under the Paperwork Reduction Act of 1995 (44 U.S.C. 3501–3520). The collections of information in 21 CFR part 812 have been approved under OMB control number 0910–0078.

V. Comments

Interested persons may submit either electronic comments regarding this document to *http://www.regulations.gov* or written comments to the Division of Dockets Management (see **ADDRESSES**). It is only necessary to send one set of comments. Identify comments with the docket number found in brackets in the heading of this document. Received comments may be seen in the Division of Dockets Management between 9 a.m. and 4 p.m., Monday through Friday, and will be posted to the docket at *http://www.regulations.gov.*

Dated: June 10, 2013.

Leslie Kux,

Assistant Commissioner for Policy.

[FR Doc. 2013–14137 Filed 6–13–13; 8:45 am]

BILLING CODE 4160–01–P

DEPARTMENT OF HEALTH AND HUMAN SERVICES

Food and Drug Administration

[Docket No. FDA–2013–D–0616]

Content of Premarket Submissions for Management of Cybersecurity in Medical Devices; Draft Guidance for Industry and Food and Drug Administration Staff; Availability

AGENCY: Food and Drug Administration, HHS.

ACTION: Notice.

SUMMARY: The Food and Drug Administration (FDA) is announcing the availability of the draft guidance entitled ''Content of Premarket Submissions for Management of Cybersecurity in Medical Devices.'' This guidance identifies cybersecurity issues that manufacturers should consider in preparing premarket submissions for medical devices in order to maintain information confidentiality, integrity, and availability. This draft guidance is not final nor is it in effect at this time.

DATES: Although you can comment on any guidance at any time (see 21 CFR 10.115(g)(5)), to ensure that the Agency considers your comment on this draft guidance before it begins work on the final version of the guidance, submit either electronic or written comments on the draft guidance by September 12, 2013.

ADDRESSES: Submit written requests for single copies of the draft guidance document entitled ''Content of Premarket Submissions for Management of Cybersecurity in Medical Devices'' to the Division of Small Manufacturers, International, and Consumer Assistance, Center for Devices and Radiological Health, Food and Drug Administration, 10903 New Hampshire Ave., Bldg. 66, Rm. 4613, Silver Spring, MD 20993–0002 or the Office of Communication, Outreach and Development (HFM–40), 1401 Rockville Pike, Suite 200N, Rockville, MD 20852. Send one self-addressed adhesive label to assist that office in processing your request, or fax your request to 301–847–8149. See the **SUPPLEMENTARY INFORMATION** section for information on electronic access to the guidance.

Submit electronic comments on the draft guidance to *http://www.regulations.gov.* Submit written comments to the Division of Dockets Management (HFA–305), Food and Drug Administration, 5630 Fishers Lane, Rm. 1061, Rockville, MD 20852. Identify comments with the docket number found in brackets in the heading of this document.

FOR FURTHER INFORMATION CONTACT: Abiy Desta, Center for Devices and Radiological Health, Food and Drug Administration, 10903 New Hampshire Ave., Bldg. 66, Rm. 1682, Silver Spring, MD 20993–0002, 301–796–0293, *Abiy.Desta@fda.hhs.gov;* or Stephen Ripley, Center for Biologics Evaluation and Research (HFM–17), Food and Drug Administration, 1401 Rockville Pike, Suite 200N, Rockville, MD 20852, 301–827–6210.

SUPPLEMENTARY INFORMATION:

I. Background

This draft guidance provides recommendations to consider and document in FDA medical device premarket submissions to provide effective cybersecurity management and to reduce the risk that device functionality is intentionally or unintentionally compromised. The need for effective cybersecurity to assure medical device functionality has become more important with the increasing use of wireless, Internet- and network-connected devices and the frequent electronic exchange of medical device-related health information.

II. Significance of Guidance

This draft guidance is being issued consistent with FDA's good guidance practices regulation (21 CFR 10.115). The draft guidance, when finalized, will represent the Agency's current thinking on management of cybersecurity in medical devices. It does not create or confer any rights for or on any person and does not operate to bind FDA or the public. An alternative approach may be used if such approach satisfies the requirements of the applicable statute and regulations.

III. Electronic Access

Persons interested in obtaining a copy of the draft guidance may do so by using the Internet. A search capability for all Center for Devices and Radiological Health guidance documents is available at *http://www.fda.gov/MedicalDevices/DeviceRegulationandGuidance/GuidanceDocuments/default.htm.* Guidance documents are also available at *http://www.regulations.gov* or from the Center for Biologics Evaluation and Research at *http://www.fda.gov/BiologicsBloodVaccines/GuidanceComplianceRegulatoryInformation/default.htm.* To receive ''Content of Premarket Submissions for Management of Cybersecurity in Medical Devices,'' you may either send an email request to *dsmica@fda.hhs.gov* to receive an electronic copy of the document or send a fax request to 301–847–8149 to receive a hard copy. Please use the document number 1825 to identify the guidance you are requesting.

IV. Paperwork Reduction Act of 1995

This draft guidance refers to previously approved collections of information found in FDA regulations. These collections of information are subject to review by the Office of Management and Budget (OMB) under the Paperwork Reduction Act of 1995 (44 U.S.C. 3501–3520). The collections of information in 21 CFR part 807, subpart E, have been approved under OMB control number 0910–0120; the collections of information in 21 CFR part 812 have been approved under OMB control number 0910–0078; the collections of information in 21 CFR part 814 have been approved under OMB control number 0910–0231; the collections of information in 21 CFR part 814, subpart H, have been approved under OMB control number 0910–0332; and the collections of information in 21 CFR part 820 have been approved under OMB control number 0910–0073.

V. Comments

Interested persons may submit either electronic comments regarding this document to *http://www.regulations.gov* or written comments to the Division of Dockets Management (see **ADDRESSES**). It is only necessary to send one set of comments. Identify comments with the docket number found in brackets in the heading of this document. Received comments may be seen in the Division of Dockets Management between 9 a.m. and 4 p.m., Monday through Friday, and will be posted to the docket at *http://www.regulations.gov.*

Dated: June 11, 2013.

Leslie Kux,

Assistant Commissioner for Policy.

[FR Doc. 2013–14167 Filed 6–13–13; 8:45 am]

BILLING CODE 4160–01–P

DEPARTMENT OF HEALTH AND HUMAN SERVICES

Food and Drug Administration

[Docket No. FDA–2010–D–0616]

Guidance for Industry on Codevelopment of Two or More New Investigational Drugs for Use in Combination; Availability

AGENCY: Food and Drug Administration, HHS.

ACTION: Notice.

SUMMARY: The FDA is announcing the availability of a guidance for industry entitled ''Codevelopment of Two or More New Investigational Drugs for Use

in Combination.'' This guidance is intended to assist sponsors in the codevelopment of two or more investigational drugs that have not been previously developed for any indication (*i.e.,* ''new investigational drugs'') to be used in combination to treat a disease or condition. The guidance provides recommendations and advice on how to address certain scientific and regulatory issues that may arise during codevelopment of two or more new investigational drugs. It is not intended to apply to development of combinations of already approved drugs or to development of a single new investigational drug to be used in combination with an already approved drug or drugs. The guidance is not intended to apply to biological products regulated by the Center for Biologics Evaluation and Research or medical devices.

DATES: Submit either electronic or written comments on Agency guidance at any time.

ADDRESSES: Submit written requests for single copies of the guidance to the Division of Drug Information, Center for Drug Evaluation and Research, Food and Drug Administration, 10903 New Hampshire Ave., Bldg. 51, Rm. 2201, Silver Spring, MD 20993–0002. Send one self-addressed adhesive label to assist that office in processing your requests. See the **SUPPLEMENTARY INFORMATION** section for electronic access to the draft guidance document.

Submit electronic comments on the draft guidance to *http://www.regulations.gov*. Submit written comments to the Division of Dockets Management (HFA–305), Food and Drug Administration, 5630 Fishers Lane, Rm. 1061, Rockville, MD 20852.

FOR FURTHER INFORMATION CONTACT: Colleen Locicero, Center for Drug Evaluation and Research, Food and Drug Administration, Bldg. 22, Rm. 4216, 10903 New Hampshire Ave., Silver Spring, MD 20993–0002, 301–796–1114.

SUPPLEMENTARY INFORMATION:

I. Background

The FDA is announcing the availability of a guidance for industry entitled ''Codevelopment of Two or More New Investigational Drugs for Use in Combination.'' The guidance is intended to assist sponsors in the codevelopment [1] of two or more investigational drugs that have not been previously developed for any indication (*i.e.,* ''new investigational drugs'') to be used in combination to treat a disease or condition. Recent scientific advances have increased our understanding of the pathophysiological processes that underlie many complex diseases, such as cancer, cardiovascular disease, and infectious diseases. This increased understanding has provided further impetus to develop therapeutic approaches that rely primarily or exclusively on combinations of drugs directed at multiple therapeutic targets to improve treatment response and minimize development of resistance. In settings in which combination therapy provides significant therapeutic advantages, there is growing interest in the development of combinations of investigational drugs not previously developed for any indication.

Because existing developmental and regulatory pathways focus primarily on assessment of the safety and effectiveness of a single new investigational drug acting alone, or in combination with an already approved drug, FDA believes guidance is needed to assist sponsors in the codevelopment of two or more new investigational drugs. This guidance is intended to describe a high-level, generally applicable approach. It describes the criteria for determining when codevelopment may be an appropriate option, makes recommendations about nonclinical and clinical development strategies, and addresses certain regulatory process issues. The guidance is not intended to apply to biological products regulated by the Center for Biologics Evaluation and Research or medical devices.

In the **Federal Register** of December 15, 2010 (75 FR 78259), FDA announced the availability of a draft of this guidance. FDA received a number of comments, including multiple comments seeking clarification of the scope and applicability of the guidance, the criteria for determining when codevelopment is appropriate, the evidentiary expectations for the individual new investigational drugs and their use in combination, and the types of regulatory submissions needed for codeveloped products. FDA has carefully considered these comments. The final guidance clarifies the criteria for determining when codevelopment is appropriate and elaborates on strategies for clinical development of the individual new investigational drugs and their use in combination. It also provides a detailed discussion of considerations for submitting Investigational New Drug Applications (INDs) and New Drug Applications (NDAs) . The final guidance clarifies the scope of the drugs to which it applies; it uses the term ''new investigational drug'' to refer to drugs that have not previously been developed for any indication. We have also revised the title of the guidance to reflect this term.

This guidance is being issued consistent with FDA's good guidance practices regulation (21 CFR 10.115). The guidance represents the Agency's current thinking on development of two or more new investigational drugs for use in combination. It does not create or confer any rights for or on any person and does not operate to bind FDA or the public. An alternative approach may be used if such approach satisfies the requirements of the applicable statutes and regulations.

II. Comments

Interested persons may submit either electronic comments regarding this document to *http://www.regulations.gov* or written comments to the Division of Dockets Management (see **ADDRESSES**). It is only necessary to send one set of comments. Identify comments with the docket number found in brackets in the heading of this document. Received comments may be seen in the Division of Dockets Management between 9 a.m. and 4 p.m., Monday through Friday, and will be posted to the docket at *http://www.regulations.gov.*

III. The Paperwork Reduction Act of 1995

This guidance refers to previously approved collections of information found in FDA regulations. These collections of information are subject to review by the Office of Management and Budget (OMB) under the Paperwork Reduction Act of 1995 (44 U.S.C. 3501–3520). The collections of information in 21 CFR part 312 have been approved under OMB control number 0910–0014. The collections of information in 21 CFR part 314 have been approved under OMB control number 0910–0001. The collections of information in 21 CFR 201.56 and 201.57 have been approved under OMB control number 0910–0572. The collections of information in 21 CFR 310.305 and 314.80 have been approved under OMB control number 0910–0230. The collections of information in 21 CFR 208.20, 208.24, and 314.70(b) have been approved under OMB control number 0910–0393.

[1] The term *codevelopment* as used in the guidance refers to the concurrent development of two or more new investigational drugs that are intended to be used in combination to treat a disease or condition. A sponsor may elect to codevelop two or more new investigational drugs intended to be marketed as individual agents or to be used in combination as a fixed-combination or copackaged drug.

IV. Electronic Access

Persons with access to the Internet may obtain the document at either *http://www.fda.gov/Drugs/GuidanceComplianceRegulatoryInformation/Guidances/default.htm* or *http://www.regulations.gov*.

Dated: June 11, 2013.

Leslie Kux,

Assistant Commissioner for Policy.

[FR Doc. 2013–14168 Filed 6–13–13; 8:45 am]

BILLING CODE 4160–01–P

DEPARTMENT OF HEALTH AND HUMAN SERVICES

National Institutes of Health

Proposed Collection; Comment Request: Palliative Care: Conversations Matter Evaluation

SUMMARY: In compliance with the requirement of Section 3506(c)(2)(A) of the Paperwork Reduction Act of 1995, for opportunity for public comment on proposed data collection projects, the National Institute of Nursing Research (NINR), the National Institutes of Health (NIH) will publish periodic summaries of proposed projects to be submitted to the Office of Management and Budget (OMB) for review and approval.

Written comments and/or suggestions from the public and affected agencies are invited on one or more of the following points: (1) Whether the proposed collection of information is necessary for the proper performance of the function of the agency, including whether the information will have practical utility; (2) The accuracy of the agency's estimate of the burden of the proposed collection of information, including the validity of the methodology and assumptions used; (3) Ways to enhance the quality, utility, and clarity of the information to be collected; and (4) Ways to minimize the burden of the collection of information on those who are to respond, including the use of appropriate automated, electronic, mechanical, or other technological collection techniques or other forms of information technology.

To obtain a copy of the data collection plans and instruments, submit comments in writing, or request more information on the proposed project, contact Ms. Adrienne Burroughs, Health Communications Specialist, Office of Communications and Public Liaison, NINR, NIH, Building 31, Room 5B10, 31 Center Drive, Bethesda, MD 20892, or call non-toll-free number (301) 496–0256, or Email your request, including your address to: *adrienne.burroughs@nih.gov.*

Comments regarding this information collection are best assured of having their full effect if received within 60-days of the date of this publication.

Proposed Collection

Palliative Care: Conversations Matter Evaluation –0925—New—National Institute of Nursing Research (NINR), National Institutes of Health (NIH)

Need and Use of Information Collection: NINR developed *Palliative Care: Conversations Matter,* a pediatric palliative care campaign to address the communications challenges faced by health care providers who recommend and provide palliative care to pediatric populations. NINR is launching this effort to increase the use of palliative care for children living with serious illness or life-limiting conditions. The *Palliative Care: Conversations Matter* evaluation will assess the information and materials being disseminated as part of the official campaign. Survey findings will help (1) Determine if the campaign is effective, relevant, and useful to health care providers who recommend and provide palliative care to pediatric populations; (2) to better understand the information needs of health care providers to inform future campaign efforts; and (3) examine how effective the campaign materials are in starting and continuing a pediatric palliative care conversation and addressing the communications needs of health care providers around this topic.

OMB approval is requested for 3 years. There are no costs to respondents other than their time. The total estimated annualized burden hours are 200.

Estimated Annualized Burden Hours

TABLE A–12–1—ESTIMATES OF ANNUAL BURDEN HOURS

Type of respondents	Number of respondents	Frequency of response	Average time per response (in hours)	Total burden hours
Physicians	150	2	20/60	100
Nurses	150	2	20/60	100
Total	300			200

Dated: June 5, 2013.

Amanda Greene,

Science Evaluation Officer, NINR, National Institutes of Health.

[FR Doc. 2013–14173 Filed 6–13–13; 8:45 am]

BILLING CODE 4140–01–P

DEPARTMENT OF HEALTH AND HUMAN SERVICES

National Institutes of Health

National Institute of General Medical Sciences; Notice of Closed Meetings

Pursuant to section 10(d) of the Federal Advisory Committee Act, as amended (5 U.S.C. App.), notice is hereby given of the following meetings.

The meetings will be closed to the public in accordance with the provisions set forth in sections 552b(c)(4) and 552b(c)(6), Title 5 U.S.C., as amended. The grant applications and the discussions could disclose confidential trade secrets or commercial property such as patentable material, and personal information concerning individuals associated with the grant applications, the disclosure of which would constitute a clearly unwarranted invasion of personal privacy.

Name of Committee: National Institute of General Medical Sciences Special Emphasis Panel; R–13 Conference Grants.

Date: July 9, 2013.

Time: 12:00 p.m. to 5:00 p.m.

Agenda: To review and evaluate grant applications.

Place: National Institutes of Health, Natcher Building, 45 Center Drive, Room 3An.12A, Bethesda, MD 20892–4874, (Telephone Conference Call).

Contact Person: Nina Sidorova, Ph.D., Scientific Review Officer, Office of Scientific Review, National Institute of General Medical Sciences, National Institutes of Health, 45 Center Drive, Room 3An.22, Bethesda, MD 20892–4874, 301–594–3663, *sidorova@nigms.nih.gov.*

Name of Committee: National Institute of General Medical Sciences Initial Review Group Training and Workforce Development Subcommittee—D.

Date: July 11–12, 2013.

Time: 8:30 a.m. to 5:00 p.m.

Agenda: To review and evaluate grant applications

Place: Residence Inn Downtown Hotel, 7335 Wisconsin Avenue, Chevy Chase, MD 20814.

Contact Person: Rebecca H. Johnson, Ph.D., Scientific Review Officer, Office of Scientific Review, National Institute of General Medical Sciences, National Institutes of Health, 45 Center Drive, Room 3An.18C, Bethesda, MD 20892–4874, 301–594–2771, *johnsonrh@nigms.nih.gov.*

(Catalogue of Federal Domestic Assistance Program Nos. 93.375, Minority Biomedical Research Support; 93.821, Cell Biology and Biophysics Research; 93.859, Pharmacology, Physiology, and Biological Chemistry Research; 93.862, Genetics and Developmental Biology Research; 93.88, Minority Access to Research Careers; 93.96, Special Minority Initiatives, National Institutes of Health, HHS)

Dated: June 10, 2013.

Melanie J. Gray,

Program Analyst, Office of Federal Advisory Committee Policy.

[FR Doc. 2013–14126 Filed 6–13–13; 8:45 am]

BILLING CODE 4140–01–P

DEPARTMENT OF HEALTH AND HUMAN SERVICES

National Institutes of Health

Center for Scientific Review; Notice of Closed Meeting

Pursuant to section 10(d) of the Federal Advisory Committee Act, as amended (5 U.S.C. App.), notice is hereby given of the following meeting.

The meeting will be closed to the public in accordance with the provisions set forth in sections 552b(c)(4) and 552b(c)(6), Title 5 U.S.C., as amended. The grant applications and the discussions could disclose confidential trade secrets or commercial property such as patentable material, and personal information concerning individuals associated with the grant applications, the disclosure of which would constitute a clearly unwarranted invasion of personal privacy.

Name of Committee: Bioengineering Sciences & Technologies Integrated Review Group, Biodata Management and Analysis Study Section.

Date: June 13–14, 2013.

Time: 8:00 a.m. to 5:00 p.m.

Agenda: To review and evaluate grant applications.

Place: Courtyard by Marriott, 5520 Wisconsin Avenue, Chevy Chase, MD 20815.

Contact Person: Mark Caprara, Ph.D., Scientific Review Officer, Center for Scientific Review, National Institutes of Health, 6701 Rockledge Drive, Room 5156, MSC 7844, Bethesda, MD 20892, 301–435–1042, *capraramg@mail.nih.gov.*

This notice is being published less than 15 days prior to the meeting due to the timing limitations imposed by the review and funding cycle.

(Catalogue of Federal Domestic Assistance Program Nos. 93.306, Comparative Medicine; 93.333, Clinical Research, 93.306, 93.333, 93.337, 93.393–93.396, 93.837–93.844, 93.846–93.878, 93.892, 93.893, National Institutes of Health, HHS)

Dated: June 10, 2013.

Melanie J. Gray,

Program Analyst, Office of Federal Advisory Committee Policy.

[FR Doc. 2013–14128 Filed 6–13–13; 8:45 am]

BILLING CODE 4140–01–P

DEPARTMENT OF HEALTH AND HUMAN SERVICES

National Institutes of Health

Center for Scientific Review; Amended Notice of Meeting

Notice is hereby given of a change in the meeting of the Center for Scientific Review Special Emphasis Panel, June 25, 2013, 8:00 a.m. to June 25, 2013, 5:00 p.m., National Institutes of Health, 6701 Rockledge Drive, Bethesda, MD, 20892 which was published in the **Federal Register** on May 28, 2013, 78 FR Pg 31951–31952.

The meeting will be held on June 26, 2013 instead of June 25, 2013 at 8:00 a.m. and will end at 5:00 p.m. The meeting location remains the same. The meeting is closed to the public.

Dated: June 10, 2013.

Melanie J. Gray,

Program Analyst, Office of Federal Advisory Committee Policy.

[FR Doc. 2013–14127 Filed 6–13–13; 8:45 am]

BILLING CODE 4140–01–P

DEPARTMENT OF HEALTH AND HUMAN SERVICES

National Institutes of Health

Center for Scientific Review; Notice of Closed Meetings

Pursuant to section 10(d) of the Federal Advisory Committee Act, as amended (5 U.S.C. App.), notice is hereby given of the following meetings.

The meetings will be closed to the public in accordance with the provisions set forth in sections 552b(c)(4) and 552b(c)(6), Title 5 U.S.C., as amended. The grant applications and the discussions could disclose confidential trade secrets or commercial property such as patentable material, and personal information concerning individuals associated with the grant applications, the disclosure of which would constitute a clearly unwarranted invasion of personal privacy.

Name of Committee: Center for Scientific Review Special Emphasis Panel; Molecular Neuroscience.

Date: June 27, 2013.

Time: 2:30 p.m. to 5:00 p.m.

Agenda: To review and evaluate grant applications.

Place: National Institutes of Health, 6701 Rockledge Drive, Bethesda, MD 20892, (Telephone Conference Call).

Contact Person: Jonathan K. Ivins, Ph.D., Scientific Review Officer, Center for Scientific Review, National Institutes of Health, 6701 Rockledge Drive, Room 4040A, MSC 7806, Bethesda, MD 20892, (301) 594–1245, *ivinsj@csr.nih.gov.*

Name of Committee: AIDS and Related Research Integrated Review Group; AIDS Discovery and Development of Therapeutics Study Section.

Date: July 8, 2013.

Time: 8:00 a.m. to 5:00 p.m.

Agenda: To review and evaluate grant applications.

Place: Ritz Carlton Hotel, 1150 22nd Street NW., Washington, DC 20037.

Contact Person: Shiv A. Prasad, Ph.D., Scientific Review Officer, Center for Scientific Review, National Institutes of Health, 6701 Rockledge Drive, Room 5220, MSC 7852, Bethesda, MD 20892, 301–443–5779, *prasads@csr.nih.gov.*

Name of Committee: Center for Scientific Review Special Emphasis Panel; Member Conflict: Genes, Genomes and Genetics.

Date: July 8, 2013.

Time: 3:00 p.m. to 4:00 p.m.

Agenda: To review and evaluate grant applications.

Place: National Institutes of Health, 6701 Rockledge Drive, Bethesda, MD 20892, (Telephone Conference Call).

Contact Person: Michael M. Sveda, Ph.D., Scientific Review Officer, Center for Scientific Review, National Institutes of Health, 6701 Rockledge Drive, Room 2204, MSC 7890, Bethesda, MD 20892, 301–435–3565, *svedam@csr.nih.gov.*

Name of Committee: Center for Scientific Review Special Emphasis Panel; Member Conflict: AIDS and AIDS Related Research.
Date: July 9, 2013.
Time: 7:45 a.m. to 8:00 a.m.
Agenda: To review and evaluate grant applications.
Place: Ritz Carlton Hotel, 1150 22nd Street NW., Washington, DC 20037.
Contact Person: Hilary D. Sigmon, Ph.D., Scientific Review Officer, Center for Scientific Review, National Institutes of Health, 6701 Rockledge Drive, Room 5216, MSC 7852, Bethesda, MD 20892, (301) 594–6377, *sigmonh@csr.nih.gov.*

Name of Committee: Center for Scientific Review Special Emphasis Panel; Small Business: Cancer Drug Developments & Therapeutics.
Date: July 9–10, 2013.
Time: 8:00 a.m. to 5:00 p.m.
Agenda: To review and evaluate grant applications.
Place: National Institutes of Health, 6701 Rockledge Drive, Bethesda, MD 20892, (Virtual Meeting).
Contact Person: Lilia Topol, Ph.D., Scientific Review Officer, Center for Scientific Review, National Institutes of Health, 6701 Rockledge Drive, Room 6192, MSC 7804, Bethesda, MD 20892, 301–451–0131, *ltopol@mail.nih.gov.*

Name of Committee: Center for Scientific Review Special Emphasis Panel; Member Conflict: AIDS and AIDS Related Research.
Date: July 9, 2013.
Time: 10:00 a.m. to 11:00 a.m.
Agenda: To review and evaluate grant applications.
Place: Ritz Carlton Hotel, 1150 22nd Street NW., Washington, DC 20037.
Contact Person: Robert Freund, Ph.D., Scientific Review Officer, Center for Scientific Review, National Institutes of Health, 6701 Rockledge Drive, Room 5216, MSC 7852, Bethesda, MD 20892, 301–435–1050, *freundr@csr.nih.gov.*

Name of Committee: Center for Scientific Review Special Emphasis Panel; Overflow: Molecular Innate and Adaptive Immunology.
Date: July 9, 2013.
Time: 11:00 a.m. to 1:00 p.m.
Agenda: To review and evaluate grant applications.
Place: National Institutes of Health, 6701 Rockledge Drive, Bethesda, MD 20892, (Telephone Conference Call).
Contact Person: David B. Winter, Ph.D., Scientific Review Officer, Center for Scientific Review, National Institutes of Health, 6701 Rockledge Drive, Room 4204, MSC 7812, Bethesda, MD 20892, 301–435–1152, *dwinter@csr.nih.gov.*

Name of Committee: Center for Scientific Review Special Emphasis Panel; Population Sciences and Epidemiology.
Date: July 9, 2013.
Time: 1:00 p.m. to 3:00 p.m.
Agenda: To review and evaluate grant applications.
Place: National Institutes of Health, 6701 Rockledge Drive, Bethesda, MD 20892, (Telephone Conference Call).
Contact Person: Denise Wiesch, Ph.D., Scientific Review Officer, Center for Scientific Review, National Institutes of Health, 6701 Rockledge Drive, Room 3138, MSC 7770, Bethesda, MD 20892, (301) 437–3478, *wieschd@csr.nih.gov.*

Name of Committee: Center for Scientific Review Special Emphasis Panel; Topics in Bacterial Pathogenesis.
Date: July 11–12, 2013.
Time: 8:00 a.m. to 6:00 p.m.
Agenda: To review and evaluate grant applications.
Place: Doubletree by Hilton Bethesda, 8120 Wisconsin Avenue, Bethesda, MD 20814.
Contact Person: Richard G. Kostriken, Ph.D., Scientific Review Officer, Center for Scientific Review, National Institutes of Health, 6701 Rockledge Drive, Room 3192, MSC 7808, Bethesda, MD 20892, 301–402–4454, *kostrikr@csr.nih.gov.*

Name of Committee: AIDS and Related Research Integrated Review Group; AIDS Immunology and Pathogenesis Study Section.
Date: July 11, 2013.
Time: 8:00 a.m. to 5:00 p.m.
Agenda: To review and evaluate grant applications.
Place: Renaissance Mayflower Hotel, 1127 Connecticut Avenue NW., Washington, DC 20036.
Contact Person: Shiv A. Prasad, Ph.D., Scientific Review Officer, Center for Scientific Review, National Institutes of Health, 6701 Rockledge Drive, Room 5220, MSC 7852, Bethesda, MD 20892, 301–443–5779, *prasads@csr.nih.gov.*

Name of Committee: Center for Scientific Review Special Emphasis Panel; Bacterial Pathogenesis.
Date: July 11, 2013.
Time: 4:00 p.m. to 6:00 p.m.
Agenda: To review and evaluate grant applications.
Place: Doubletree Hotel Bethesda, (Formerly Holiday Inn Select), 8120 Wisconsin Avenue, Bethesda, MD 20814.
Contact Person: Joanna M. Pyper, Ph.D., Scientific Review Officer, Center for Scientific Review, National Institutes of Health, 6701 Rockledge Drive, Room 3198, MSC 7808, Bethesda, MD 20892, (301) 435–1151, *pyperj@csr.nih.gov.*

Name of Committee: Center for Scientific Review Special Emphasis Panel; RFA–OD–12–007: Research Relevant to the Family Smoking Prevention and Control Act (P30).
Date: July 12, 2013.
Time: 8:00 a.m. to 5:00 p.m.
Agenda: To review and evaluate grant applications.
Place: Marriott Wardman Park Washington DC Hotel, 2660 Woodley Road NW., Washington, DC 20008.
Contact Person: Gabriel B. Fosu, Ph.D., Scientific Review Officer, Center for Scientific Review, National Institutes of Health, 6701 Rockledge Drive, Room 3215, MSC 7808, Bethesda, MD 20892, (301) 435–3562, *fosug@csr.nih.gov.*

Name of Committee: AIDS and Related Research Integrated Review Group; HIV/AIDS Vaccines Study Section.
Date: July 12, 2013.
Time: 10:00 a.m. to 7:00 p.m.
Agenda: To review and evaluate grant applications.
Place: National Institutes of Health, 6701 Rockledge Drive, Bethesda, MD 20892.
Contact Person: Mary Clare Walker, Ph.D., Scientific Review Officer, Center for Scientific Review, National Institutes of Health, 6701 Rockledge Drive, Room 5208, MSC 7852, Bethesda, MD 20892, (301) 435–1165, *walkermc@csr.nih.gov.*

Name of Committee: AIDS and Related Research Integrated Review Group; AIDS-associated Opportunistic Infections and Cancer Study Section.
Date: July 15, 2013.
Time: 8:00 a.m. to 5:00 p.m.
Agenda: To review and evaluate grant applications.
Place: The St. Regis Washington DC, 923 16th Street NW., Washington, DC 20006.
Contact Person: Eduardo A. Montalvo, Ph.D., Scientific Review Officer, Center for Scientific Review, National Institutes of Health, 6701 Rockledge Drive, Room 5108, MSC 7852, Bethesda, MD 20892, (301) 435–1168, *montalve@csr.nih.gov.*

Name of Committee: Center for Scientific Review Special Emphasis Panel; Fellowships: Cell Biology, Developmental Biology and Bioengineering.
Date: July 15, 2013.
Time: 8:30 a.m. to 6:00 p.m.
Agenda: To review and evaluate grant applications.
Place: Doubletree Hotel Bethesda, (Formerly Holiday Inn Select), 8120 Wisconsin Avenue, Bethesda, MD 20814.
Contact Person: Alexander Gubin, Ph.D., Scientific Review Officer, Center for Scientific Review, National Institutes of Health, 6701 Rockledge Drive, Room 4196, MSC 7812, Bethesda, MD 20892, 301–435–2902, *gubina@csr.nih.gov.*

Name of Committee: Center for Scientific Review Special Emphasis Panel; Member Conflicts: Sensory Neuroscience.
Date: July 16–17, 2013.
Time: 8:00 a.m. to 8:00 p.m.
Agenda: To review and evaluate grant applications.
Place: National Institutes of Health, 6701 Rockledge Drive, Bethesda, MD 20892, (Virtual Meeting).
Contact Person: John Bishop, Ph.D., Scientific Review Officer, Center for Scientific Review, National Institutes of Health, 6701 Rockledge Drive, Room 5182, MSC 7844, Bethesda, MD 20892, (301) 408–9664, *bishopj@csr.nih.gov.*

Name of Committee: Center for Scientific Review Special Emphasis Panel; RFA–RM–12–022: Broadening Experiences in Scientific Training (DP7/BEST), Panel 2.
Date: July 16–17, 2013.
Time: 8:00 a.m. to 5:00 p.m.
Agenda: To review and evaluate grant applications.
Place: Hyatt Regency Bethesda, One Bethesda Metro Center, 7400 Wisconsin Avenue, Bethesda, MD 20814.
Contact Person: Lawrence E Boerboom, Ph.D., Chief, CVRS IRG, Center for Scientific Review, National Institutes of Health, 6701 Rockledge Drive, Room 4130, MSC 7814, Bethesda, MD 20892, (301) 435–8367, *boerboom@nih.gov.*

Name of Committee: Center for Scientific Review Special Emphasis Panel; Shared Instrumentation MRI.

Date: July 16, 2013.

Time: 12:00 p.m. to 5:00 p.m.

Agenda: To review and evaluate grant applications.

Place: National Institutes of Health, 6701 Rockledge Drive, Bethesda, MD 20892, (Virtual Meeting).

Contact Person: Malgorzata Klosek, Ph.D., Scientific Review Officer, Center for Scientific Review, National Institutes of Health, 6701 Rockledge Drive, Room 4188, MSC 7849, Bethesda, MD 20892, (301) 435–2211, *klosekm@csr.nih.gov.*

(Catalogue of Federal Domestic Assistance Program Nos. 93.306, Comparative Medicine; 93.333, Clinical Research, 93.306, 93.333, 93.337, 93.393–93.396, 93.837–93.844, 93.846–93.878, 93.892, 93.893, National Institutes of Health, HHS)

Dated: June 10, 2013.

Melanie J. Gray,

Program Analyst, Office of Federal Advisory Committee Policy.

[FR Doc. 2013–14129 Filed 6–13–13; 8:45 am]

BILLING CODE 4140–01–P

DEPARTMENT OF HOMELAND SECURITY

Coast Guard

[Docket No. USCG–2013–0226]

Certificate of Alternative Compliance for the M/V MADELINE, 669921

AGENCY: Coast Guard, DHS.

ACTION: Notice.

SUMMARY: The Coast Guard announces that a Certificate of Alternative Compliance was issued for the passenger vessel ferry MADELINE as required by 33 U.S.C. 1605(c) and 33 CFR 81.18.

DATES: The Certificate of Alternative Compliance was issued on January 28, 2013.

ADDRESSES: The docket for this notice is available for inspection or copying at the Docket Management Facility (M–30), U.S. Department of Transportation, West Building Ground Floor, Room W12–140, 1200 New Jersey Avenue SE., Washington, DC 20590, between 9 a.m. and 5 p.m., Monday through Friday, except Federal holidays. You may also find this docket on the Internet by going to *http://www.regulations.gov,* inserting USCG–2013–0226 in the ''SEARCH'' box, and then clicking ''Search.''

FOR FURTHER INFORMATION CONTACT: If you have questions on this notice, call LT Steven Melvin, District Nine, Prevention Branch, U.S. Coast Guard, telephone 216–902–6343. If you have questions on viewing or submitting material to the docket, call Barbara Hairston, Program Manager, Docket Operations, telephone 202–366–9826.

SUPPLEMENTARY INFORMATION:

Background and Purpose

A Certificate of Alternative Compliance, as allowed for under 33 U.S.C. 1605(c) and 33 CFR 81.18, has been issued for the M/V MADELINE. The vessel's primary purpose is as an island passenger car ferry that operates on the south shore of Lake Superior in Northern Wisconsin. The unique design of the vessel did not lend itself to full compliance with Annex I of the Inland Rules Act.

The Commandant, U.S. Coast Guard, certifies that full compliance with the Inland Rules Act would interfere with the special functions/intent of the vessel and would not significantly enhance the safety of the vessel's operation. Placing the starboard and port side lights in the required position would make them vulnerable to damage from the dock wall because of consistent lower than normal water levels on Lake Superior.

The Certificate of Alternative Compliance authorizes the M/V MADELINE to deviate from the requirements set forth in Annex I of the Inland Rules Act by placing its port and starboard lights on the main superstructure above the pilot house.

This notice is issued under authority of 33 U.S.C. 1605(c), and 33 CFR 81.18.

Dated: May 10, 2013.

S.E. Anderson,

Commander, U.S. Coast Guard Acting Chief, Prevention Division By Direction of the Commander, Ninth Coast Guard District.

[FR Doc. 2013–14089 Filed 6–13–13; 8:45 am]

BILLING CODE 9110–04–P

DEPARTMENT OF HOMELAND SECURITY

Transportation Security Administration

[Docket No. TSA–2013–0005]

RIN 1652–AA55

Request for Comments on Security Training Programs for Surface Mode Employees

AGENCY: Transportation Security Administration (TSA), DHS.

ACTION: Notice; request for comments.

SUMMARY: TSA seeks comments and data on employee security training programs and planned security training exercises currently provided by owner/operators of freight railroads, passenger railroads, public transportation systems (excluding ferries), and over-the-road buses. While TSA is in the process of completing a notice of proposed rulemaking (NPRM) that would fulfill requirements of the *Implementing Recommendations of the 9/11 Commission Act of 2007* (9/11 Act) to mandate security training for frontline employees, additional data would provide TSA with a more accurate understanding of the existing baseline and potential costs associated with the proposed rule. In particular, TSA is requesting information regarding programs currently implemented—whether as a result of regulatory requirements, grant requirements, in anticipation of a rule, voluntary, or otherwise—and the costs associated with these training programs.

DATES: Submit comments by July 15, 2013.

ADDRESSES: You may submit comments, identified by the TSA docket number to this rulemaking, to the Federal Docket Management System (FDMS), a government-wide, electronic docket management system, using any one of the following methods:

Electronically: You may submit comments through the Federal eRulemaking portal at *http://www.regulations.gov.* Follow the online instructions for submitting comments.

Mail, In Person, or Fax: Address, hand-deliver, or fax your written comments to the Docket Management Facility, U.S. Department of Transportation, 1200 New Jersey Avenue SE., West Building Ground Floor, Room W12–140, Washington, DC 20590–0001; fax (202) 493–2251. The Department of Transportation (DOT), which maintains and processes TSA's official regulatory dockets, will scan the submission and post it to FDMS.

See **SUPPLEMENTARY INFORMATION** for format and other information about comment submissions.

FOR FURTHER INFORMATION CONTACT: Virginia Wise, Office of Security Policy and Industry Engagement, Surface Division, TSA–28, Transportation Security Administration, 601 South 12th Street, Arlington, VA 20598–6028; telephone (571) 227–1080; facsimile (703) 603–0230; email *Ginny.Wise@dhs.gov.*

SUPPLEMENTARY INFORMATION:

Comments Invited

TSA invites interested persons to participate in this action by submitting written comments or views, supplemented with as much data as possible. We also invite comments relating to the economic or federalism impacts that might result from this action. See **ADDRESSES** above for

information on where to submit comments.

With each comment, please identify the docket number at the beginning of your comments. While not required, TSA encourages commenters to provide their name and contact information so TSA can engage in follow-up, if necessary. The most helpful comments reference a specific portion of the document and include supporting data. You may submit comments and material electronically, in person, by mail, or fax as provided under **ADDRESSES**, but please submit your comments and material by only one means. If you submit comments by mail or delivery, submit them in an unbound format, no larger than 8.5 by 11 inches, suitable for copying and electronic filing.

If you would like TSA to acknowledge receipt of comments submitted by mail, include with your comments a self-addressed, stamped postcard on which the docket number appears. We will stamp the date on the postcard and mail it to you.

TSA will file all comments to our docket address, as well as items sent to the address or email under **FOR FURTHER INFORMATION CONTACT**, in the public docket, except for comments containing confidential information and sensitive security information (SSI).[1] Should you wish your personally identifiable information redacted prior to filing in the docket, please so state. TSA will consider all comments that are in the docket on or before the closing date for comments and will consider comments filed late to the extent practicable. The docket is available for public inspection before and after the comment closing date.

Handling of Confidential or Proprietary Information and Sensitive Security Information (SSI) Submitted in Public Comments

Comments containing trade secrets, confidential commercial or financial information, other proprietary information, or SSI should be appropriately marked as containing such information and submitted by mail to the address listed in **FOR FURTHER INFORMATION CONTACT** section. Do not submit comments containing this type of information to the public regulatory docket. TSA will not place comments containing SSI in the public docket and will handle them in accordance with applicable safeguards and restrictions on access. TSA will hold documents containing SSI, confidential business information, or trade secrets in a separate file to which the public does not have access, and place a note in the public docket explaining that commenters have submitted such documents. TSA may include a redacted version of the comment in the public docket. If an individual requests to examine or copy information that is not in the public docket, TSA will treat it as any other request under the Freedom of Information Act (FOIA) (5 U.S.C. 552) and the Department of Homeland Security's (DHS's) FOIA regulation found in 6 CFR part 5.

Reviewing Comments in the Docket

Please be aware that anyone is able to search the electronic form of all comments in any of our dockets by the name of the individual who submitted the comment (or signed the comment, if an association, business, labor union, etc., submitted the comment). You may review the applicable Privacy Act Statement published in the **Federal Register** on April 11, 2000 (65 FR 19477), or you may visit *http://DocketInfo.dot.gov.*

You may review TSA's electronic public docket on the Internet at *http://www.regulations.gov.* In addition, DOT's Docket Management Facility provides a physical facility, staff, equipment, and assistance to the public. To obtain assistance or to review comments in TSA's public docket, you may visit this facility between 9:00 a.m. to 5:00 p.m., Monday through Friday, excluding legal holidays, or call (202) 366–9826. This docket operations facility is located in the West Building Ground Floor, Room W12–140 at 1200 New Jersey Avenue SE., Washington, DC 20590.

Availability of Document

You can get an electronic copy using the Internet by—

(1) Searching the electronic Federal Docket Management System (FDMS) Web page at *http://www.regulations.gov;*

(2) Accessing the Government Printing Office's Web page at *http://www.gpo.gov/fdsys/browse/collection.action?collectionCode=FR* to view the daily published **Federal Register** edition; or accessing the ''Search the **Federal Register** by Citation'' in the ''Related Resources'' column on the left, if you need to do a Simple or Advanced search for information, such as a type of document that crosses multiple agencies or dates; or

(3) Visiting TSA's Security Regulations Web page at *http://www.tsa.gov* and accessing the link for ''Stakeholders'' at the top of the page, then the link ''Research Center'' in the left column.

In addition, copies are available by writing or calling the individual in the **FOR FURTHER INFORMATION CONTACT** section. Make sure to identify the docket number of this rulemaking.

Requirements of the 9/11 Act

The ''Implementing Recommendations of the 9/11 Commission Act of 2007'' (9/11 Act) requires DHS to issue regulations requiring security training for frontline employees in the public transportation, railroad carrier, and over-the-road bus (OTRB) modes.[2] In summary, the 9/11 Act specifies for each mode that regulations must (1) Require preparation of a program to prepare employees, including frontline employees, for potential security threats and conditions; (2) for each mode, the 9/11 Act prescribes specific elements that must, at a minimum, be included in the program; and (3) sets the schedule by which all employees covered by the program must be trained. While TSA is in the process of completing a notice of proposed rulemaking (NPRM) that would fulfill these requirements of the 9/11 Act, additional data would provide TSA with a more accurate understanding of the existing baseline and potential costs associated with the proposed rule. TSA will consider comments and data submitted in response to this Notice to inform the NPRM. There will be another opportunity for comment on the proposed rule once it is published in the **Federal Register**.

9/11 Act's Public Transportation Security Training Requirements. Paragraph 1408(a) of the 9/11 Act directs the Secretary of Homeland Security to develop and issue regulations ''for a public transportation security training program to prepare public transportation employees, including frontline employees, for potential security threats and conditions.'' Paragraph 1408(c) directs DHS to include specific program elements. Paragraph 1408(d) requires DHS to approve security training programs. Paragraph 1408(b) directs DHS to consult with a range of stakeholders, including appropriate law enforcement, fire service, security, and terrorism experts; representatives of public transportation agencies; and

[1] ''Sensitive Security Information'' or ''SSI'' is information obtained or developed in the conduct of security activities, the disclosure of which would constitute an unwarranted invasion of privacy, reveal trade secrets or privileged or confidential information, or be detrimental to the security of transportation. The protection of SSI is governed by 49 CFR part 1520.

[2] Public Law 110–53; 121 Stat. 266 (August 3, 2007).

nonprofit employee labor organizations representing public transportation employees or emergency response personnel, before issuing the regulation.

9/11 Act's Railroad Carrier Security Training Requirements. Section 1517 of the 9/11 Act sets similar requirements for railroad carriers. Paragraph 1517(a) directs the Secretary of Homeland Security to develop and issue regulations for a security training program ''to prepare railroad carrier frontline employees for potential security threats and conditions.'' DHS must consider ''any current security training requirements and best practices'' in these regulations. Paragraph 1517(b) requires DHS to consult with stakeholders including appropriate law enforcement, fire service, emergency response, security, and terrorism experts; railroad carriers; railroad shippers; and nonprofit employee labor organizations representing railroad employees or emergency response personnel. Paragraph 1517(c) specifies program elements. Paragraph 1517(d) requires DHS to approve security training programs. Within 90 days after DHS issues the regulations, each railroad carrier must develop a security training program and submit it to DHS for approval.

9/11 Act's Over-the-Road Bus Security Training Requirements. Section 1534 of the 9/11 Act contains similar requirements for OTRBs. Paragraph 1534(a) directs DHS to develop and issue regulations for an OTRB program ''to prepare over-the-road bus frontline employees for potential security threats and conditions'' and to ''take into consideration any current security training requirements or best practices.'' Paragraph 1534(b) directs DHS to consult with OTRB owner/operators, first responders, labor representatives, and security experts before issuing the rule. Paragraph 1534(c) specifies program elements. Paragraph 1534(d) requires DHS to approve security training programs. Within 90 days after DHS issues the regulations, each OTRB owner/operator must develop a security training program and submit it to DHS for approval.

Specific requirements for all modes. The 9/11 Act prescribes specific elements that must, at a minimum, be included in the security training program required by the regulations. Table 1 identifies the specific elements as prescribed for each of the three modes specified in the Act.

TABLE 1—REQUIRED TRAINING PROGRAM ELEMENTS FROM 9/11 ACT

1408(c)—Public transportation	1517(c)—Freight and passenger railroads	1534(c)—OTRB
(1) Determination of the seriousness of any occurrence or threat.	(1) Determination of the seriousness of any occurrence or threat.	(1) Determination of the seriousness of any occurrence or threat.
(2) Crew and passenger communication and coordination.	(2) Crew and passenger communication and coordination.	(2) Driver and passenger communication and coordination.
(3) Appropriate responses to defend oneself, including using nonlethal defense devices.	(3) Appropriate responses to defend or protect oneself.	(3) Appropriate responses to defend or protect oneself.
(4) Use of personal protective devices and other protective equipment.	(4) Use of personal and other protective equipment.	(4) Use of personal and other protective equipment.
(5) Evacuation procedures for passengers and employees, including individuals with disabilities and the elderly.	(5) Evacuation procedures for passengers and railroad employees, including individuals with disabilities and the elderly.	(5) Evacuation procedures for passengers and over-the-road bus employees, including individuals with disabilities and the elderly.
(6) Training related to behavioral and psychological understanding of, and responses to, terrorist incidents, including the ability to cope with hijacker behavior, and passenger responses.	(6) Psychology, behavior, and methods of terrorists, including observation and analysis.	(6) Psychology, behavior, and methods of terrorists, including observation and analysis.
(7) Live situational training exercises regarding various threat conditions, including tunnel evacuation procedures.	(7) Training related to psychological responses to terrorist incidents, including the ability to cope with hijacker behavior and passenger responses.	(7) Training related to psychological responses to terrorist incidents, including the ability to cope with hijacker behavior and passenger responses.
(8) Recognition and reporting of dangerous substances and suspicious packages, persons, and situations.	(8) Live situational training exercises regarding various threat conditions, including tunnel evacuation procedures.	(8) Live situational training exercises regarding various threat conditions, including tunnel evacuation procedures.
(9) Understanding security incident procedures, including procedures for communicating with governmental and non-governmental emergency response providers and for on scene interaction with such emergency response providers.	(9) Recognition and reporting of dangerous substances, suspicious packages, and situations.	(9) Recognition and reporting of dangerous substances, suspicious packages, and situations.
(10) Operation and maintenance of security equipment and systems.	(10) Understanding security incident procedures, including procedures for communicating with governmental and non-governmental emergency response providers and for on scene interaction with such emergency response providers.	(10) Understanding security incident procedures, including procedures for communicating with emergency response providers and for on scene interaction with such emergency response providers.
(11) Other security training activities that the Secretary deems appropriate.	(11) Operation and maintenance of security equipment and systems.	(11) Operation and maintenance of security equipment and systems.
	(12) Other security training activities that the Secretary deems appropriate.	(12) Other security training activities that the Secretary deems appropriate.

Table 2 identifies the frontline employees who, at a minimum, must be trained pursuant to security training programs developed to meet the requirements of the 9/11 Act. Some flexibility is allowed for the training program to make adjustments as necessary based upon the work performed by the employee. For example, a dispatcher's training would likely have more focus on the appropriate protocols for sharing

information during an emergency while a maintenance-of-way worker may have more training on identifying potential threats.

TABLE 2—FRONTLINE EMPLOYEES IDENTIFIED IN THE 9/11 ACT

Sec. 1402(4)—Public transportation frontline employees	Sec. 1501(5)—OTRB frontline employees	Sec. 1501(6)—Railroad frontline employees
Transit vehicle driver or operator	Drivers	Locomotive engineers, conductors, trainmen, and other onboard employees.
Maintenance and maintenance support employee.	Maintenance and maintenance support personnel.	Maintenance, maintenance support personnel, and bridge tenders.
Dispatcher	Dispatchers	Dispatchers.
Security employee, or transit police	Security personnel	Security personnel.
Station attendant, customer service employee, and any other employee who has direct contact with riders on a regular basis.	Ticket agents [and] other terminal employees	Locomotive engineers, conductors, and other onboard employees.
Any other employee of a public transportation agency that the Secretary determines should receive security training.	Other employees of an over-the-road bus operator or terminal owner or operator that the Secretary determines should receive security training.	Any other employees of railroad carriers that the Secretary determines should receive security training.

Relation to Other Training Programs

The 9/11 Act includes requirements for TSA to consider ''any current security training requirements or best practices'' before issuing security training regulations.[3] TSA is aware that many public transportation agencies, railroads, and OTRB owner/operators have implemented training that may satisfy some of the required security training program elements outlined above. The impetus for development of this training may include requirements of other Federal regulations; pursuant to a grant, using materials developed and/or approved by TSA; in anticipation of this rulemaking; voluntarily; or as a best practice. A range of courses—including those sponsored by TSA and other Federal agencies such as Federal Transit Administration (FTA), the Federal Railroad Administration (FRA), Federal Motor Carriers Safety Administration (FMCSA), the Federal Emergency Management Agency (FEMA) and the Pipeline and Hazardous Materials Safety Administration (PHMSA)—may provide a means for covered entities to coordinate training for their employees in many of the elements stipulated in the 9/11 Act.

For example, TSA is aware of security training programs that mass transit and passenger rail agencies have implemented through courses sponsored by FTA, TSA, FRA and FEMA. Some of this information has been obtained by TSA as part of an ongoing effort under the Mass Transit Security Grant Program (TSGP) to develop a user-friendly matrix on training at basic and follow-on levels for particular categories of transit employees. In the past, as part of the TSGP, DHS has provided information to eligible agencies on training that would be pre-approved for use of grant funds in order to help in developing grant applications. TSA is also aware that many agencies have used funds provided under the TSGP to obtain third-party training.

There are also programs that have been developed to support testing effectiveness of response capabilities, such as the National Exercise Program managed by the Federal Emergency Management Agency (FEMA), exercises and drills funded through the TSGP, and the Intermodal Security Training and Exercise Program (I–STEP), both administered by TSA.[4] Some of these courses are identified in the example for a security training matrix posted in the docket for this rulemaking (the purpose of this example is discussed below).

Similarly, under the Intercity Bus Security Grant Program (IBSGP), which has funded security grants to ''eligible private operators providing transportation by an over-the-road bus,'' TSA has managed Operation Secure Transport (OST). Operation Secure Transport is a training resource made available to train industry employees. Use of this training is voluntary. This training includes a curriculum intended to develop the ability of bus employees to recognize security threats and respond appropriately to security incidents. Under other grant programs, TSA has funded development of the First Observer™ program, which includes training modules for OTRB drivers on the need to be aware and vigilant for activities that could lead to terrorist incidents, such as how terrorists operate and how drivers and others can sharpen their powers of observation and be involved in preventing terrorism.

Request for Comments

TSA is requesting public comment and data to assist TSA in determining the current baseline of training that could meet some of the security training program elements outlined above. In particular, TSA is interested in receiving more data from owner/operators who are currently providing security or related safety training to their employees. While TSA has gathered significant information in these areas as part of its rulemaking efforts, there are some areas where it would be helpful to validate cost elements and ensure our understanding of the existing baseline is current. The questions asked seek information to close these gaps.

Commenters are asked to provide as much information as possible. In some areas, very specific information is being requested. TSA recognizes that providing detailed on every question could be burdensome. All information received will be considered, regardless of whether it is complete, and it is very much appreciated.

General information. Providing information on the nature of the business operation of the person commenting will help TSA more fully appreciate the information provided. Please include in your comments information regarding the nature and size of the business for which the other information is being provided. In addition, we would appreciate receiving information about how training is normally delivered, for example, through instructor-led training sessions,

[3] *See* 9/11 Act secs. 1517(a) and 1534(a).

[4] In FY 2008 and FY 2009, the TSGP included a Freight Rail Security Grant Program (FRSGP) that focused on activities designed to strengthen the nation's critical freight rail infrastructure against risks associated with potential terrorist attacks. In FY 2009, the program awarded approximately $1.4 million for training projects.

web-based training, or other. Failure to provide this information will not preclude the agency's full consideration of the comment.

Request to complete training matrix. To assist commenters, TSA has provided tables in the docket for this rulemaking that identify the requirements of the 9/11 Act. TSA is asking commenters to complete the table and submit it to TSA. An example is provided, using courses known to be provided through the TSGP, I–STEP and other programs previously identified. If the training is being provided to comply with a Federal or state requirement, please identify the source of that requirement.

Request to respond to specific questions. In addition, TSA is asking owner/operators of one of the modes of transportation that fall within the categories identified in the 9/11 Act (freight railroads, public transportation systems, passenger railroads, over-the-road buses) to respond to the following questions to help us identify the baseline and potential costs for the proposed rule. When providing comments, please explain the basis and reasoning underlying your comment. Please provide citations and copies of any relevant studies or reports on which you rely as well as any additional data which supports your comment.

1. The 9/11 Act focuses the security training program requirements on ''frontline'' employees. For the relevant business operation, or component of a larger entity, that would be required to have a security training program, what percentage of total employees are frontline employees as identified in Table 2? Please include in the total all frontline employees, including those employed through a contractor. If the total includes personnel employed through a contractor, please identify what percentage they are of the total.

1.1. Do you provide security awareness training to frontline employees (see Table 1 for a description of the elements of security awareness training and see Table 2 for an identification of frontline employees), either through a formal security awareness training program, or through some other type of employee training or exercise? If so, please briefly describe. How long have you provided this training? Did you change the training provided after passage of the 9/11 Act? Please provide the number of hours, per employee and overall, in preparing, attending, and implementing these training elements.

1.2. Are there certain types of frontline employees that currently do not participate in your company's training programs? If so, please indicate which types of employees (from Table 2) do not currently participate. Similarly, if you provide training on some of the elements listed in Table 1 to frontline employees, please describe which training elements and the types of employees who receive the training.

1.3. Do your frontline employees employed through a contractor receive the same training as other frontline employees? If not, please explain why.

1.4. What is the current cost per employee for your security awareness training? If you do not provide training on all of the elements listed in Table 1 to all frontline employees, please describe in as much detail as possible the projected *additional* cost to your organization of providing training on the Table 1 elements to all frontline employees. When providing an estimate for the projected additional costs, please include the assumptions you are using.

1.5. What is the curriculum delivery method used for your security awareness training (for example, instructor-led in classroom, computer-based, self-study, training exercises, a combination of those methods)?

1.6. What, if any, is the refresher training cycle for the training elements outlined above (for example, annual, biennial, triennial)?

1.7. Rounded up to the nearest hour, what is the amount of time spent in training related to the security elements in Table 1, per employee? (Please indicate whether this includes travel time and, if so, please provide any available data on how much.) Does this time frame differ based on the employment type or classification of the trainee? If so, please provide more detail on how your company determines the appropriate level of training.

1.8. To the extent, either at the corporate headquarters or subsidiary level, you have received federal grant funding for the development, production, or delivery of security awareness training, please indicate whether it was for developing specific training, training specific employees, or both. In other words, please indicate how the funding was allocated. In the absence of grant funding, would you have instituted this training?

2. Does your organization conduct operational or ''live'' exercises to test security training? To the extent possible, please provide information regarding the exercise program that reflects whether it is a phased or multi-tiered program. For example, some exercise programs have frequent spot checks with employees while performing their duties, less frequent table-top exercises for managers, and only conduct ''live'' exercises involving emergency responders and other stakeholders every few years. If you have such an exercise program, in answering the questions, please provide as much of a cost breakdown as possible to reflect costs associated with scope, frequency, and number of participating employees.

2.1. What employee populations participate in these exercises?

2.2. What number of or percentage of frontline employees, as listed in Table 2, participate in the exercises?

2.3. What is the frequency of the exercises?

2.4. How many management hours are involved in conducting security exercises including development time and coordination with contractors?

2.5. TSA is aware that owner/operators sometimes contract with private vendors for the planning, preparation, execution, and evaluation of exercises. TSA assumes that the fees charged by vendors will depend on the size and scope of the exercise, including the phases of an exercise, travel expenses for contractors, and other incidental charges. TSA requests informed comments related to contractor fees and the scope of services provided.

2.6. What types of existing tools or resources provided by TSA have you used that you think would help your company meet the requirements of the 9/11 Act? (For example, the Intermodal Security Training and Exercise Program (I–STEP) and First Observer™.)

2.7. Do you change the curriculum or format of your training programs based upon the results of these exercises? How do you evaluate whether a change is needed?

3. Additional data needed from owner/operators of freight railroads.

3.1. TSA derived a 4 percent annual railroad employee turnover rate from the Railroad Retirement Board.[5] Is this turnover rate a good approximation of the turnover rate for the freight railroad industry? If no, TSA requests comments on the freight railroad industry employee turnover rate.

4. Additional data needed from owner/operators of public transportation systems.

4.1. TSA obtained a 10.9 percent annual employee turnover rate for public bus systems from a Transit Cooperative Research Program report

[5] Railroad Retirement Board, *Twenty-Fifth Actuarial Valuation of Assets and Liabilities Under the Railroad Retirement Acts as of December 31, 2010 with Technical Supplement,* at p. 91, tbl. S–34 (under the ''All Ages, Crude 100'' column). *See http://www.rrb.gov/pdf/act/valuation.pdf.*

sponsored by the FTA.[6] Is this turnover rate a good approximation of the turnover rate for public transportation and passenger railroads? If no, TSA requests comments on the public transportation and passenger railroad employee turnover rate.

4.2. TSA obtained a 0.92 percent annual growth rate for public transportation and passenger railroad employees from American Public Transportation Association (APTA).[7] Is this growth rate a good approximation of the industry growth rate for the public transportation and passenger railroad industry? If no, TSA requests comments on the public transportation and passenger railroad industry growth rate.

5. Additional data needed from owner/operators of over-the-road buses.

5.1. TSA obtained a 32.3 percent annual employee turnover rate for the OTRB industry using the BLS JOLTS hires rates for transportation, warehousing, and utilities worker.[8] Is this turnover rate a good approximation of the turnover rate for the OTRB industry? If no, TSA requests comments on the OTRB industry turnover rate.

5.2. TSA obtained a 1.77 percent annual industry growth rate for OTRB carriers from the U.S. Census Bureau.[9] Is this growth rate a good approximation of the industry growth rate for the OTRB industry? If no, TSA requests comments on the OTRB industry growth rate.

5.3. TSA obtained a 1.99 percent annual employee growth rate from the U.S. Census Bureau.[10] Is this growth rate a good approximation of the employee growth rate for the OTRB industry? If no, TSA requests comments on the OTRB industry employee growth rate.

Conclusion

As previously noted, TSA appreciates the information that stakeholders have already provided during the consultation phase of this rulemaking required by the 9/11 Act.[11] We are also aware that a great deal of focus has been placed on the issue of enhancing security through training over the last decade. In finalizing a proposed rule, TSA wants to ensure that we adequately reflect these efforts. Any information that can be provided is appropriate and will be considered by TSA.

Dated: June 8, 2013.

John S. Pistole,

Administrator.

[FR Doc. 2013–14091 Filed 6–13–13; 8:45 am]

BILLING CODE 9110–05–P

[6] Transportation Research Board, 2001, *TCRP Synthesis 40,* at chpt. 5, p. 36. *See http://onlinepubs.trb.org/Onlinepubs/tcrp/tsyn40.pdf.*

[7] APTA, *2010 Public Transportation Fact Book,* at page vii, App. A: Historical Tables (tbl. 11: *Operating Employees by Mode*). TSA used the CAGR formula to derive the annual growth rate using 1984–2008 data, netting out the trolley and paratransit employees. CAGR = ((End value/start value)^(1/periods-1)-1). *See http://www.apta.com/resources/statistics/Documents/FactBook/2010_Fact_Book_Appendix_A.pdf.*

[8] Bureau of Labor Statistics, *Jobs and Labor Turnover Survey, Transportation, warehousing, and utilities workers, Hires Rate, Annual Jan–Dec 2010* (Series ID JTU48009900HIR).

[9] U.S. Census Bureau, *Economic Census 1997 & 2007.* Number of establishments for the following NAICS code industries included: 4859 Other transit & ground passenger transportation (2,555 & 3,136), 4855 Charter bus industry (1,531 & 1,300), 485113 Bus & motor vehicle transit systems (542 & 933), 4852 Interurban & rural bus transportation (407 & 562). TSA then applied the constant annual growth rate formula: CAGR: ((End Value/Start Value)^(1/(periods-1))-1. *See http://www.census.gov/epcd/ec97/us/US000_48.HTM#N485* and *http://factfinder2.census.gov/bkmk/table/1.0/en/ECN/2007_US/48A1//naics~485113%7C4852%7C4855%7CALL-4859.*

[10] U.S. Census Bureau, *Economic Census, 1997 & 2007.* Employee data for the following NAICS codes included: 4859 (46,304 & 56,689), 4855 (31,483 & 31,343), 485113 (27,448 & 42,334), 4852 (19,900 & 17,690). CAGR = ((End Value/Start Value)^(1/(periods-1))-1). *See http://www.census.gov/epcd/ec97/us/US000_48.HTM#N485* and *http://factfinder.census.gov/servlet/IBQTable?_bm=y&-geo_id=&-fds_name=EC0700A1&-_skip=100&-ds_name=EC0748I2&-_lang=en.*

[11] *See* secs. 1408(b), 1517(b), and 1534(b).

DEPARTMENT OF HOUSING AND URBAN DEVELOPMENT

[Docket No. FR–5681–N–24]

Federal Property Suitable as Facilities To Assist the Homeless

AGENCY: Office of the Assistant Secretary for Community Planning and Development, HUD.

ACTION: Notice.

SUMMARY: This Notice identifies unutilized, underutilized, excess, and surplus Federal property reviewed by HUD for suitability for use to assist the homeless.

FOR FURTHER INFORMATION CONTACT: Juanita Perry, Department of Housing and Urban Development, 451 Seventh Street SW., Room 7266, Washington, DC 20410; telephone (202) 402–3970; TTY number for the hearing- and speech-impaired (202) 708–2565 (these telephone numbers are not toll-free), or call the toll-free Title V information line at 800–927–7588.

SUPPLEMENTARY INFORMATION: In accordance with 24 CFR part 581 and section 501 of the Stewart B. McKinney Homeless Assistance Act (42 U.S.C. 11411), as amended, HUD is publishing this Notice to identify Federal buildings and other real property that HUD has reviewed for suitability for use to assist the homeless. The properties were reviewed using information provided to HUD by Federal landholding agencies regarding unutilized and underutilized buildings and real property controlled by such agencies or by GSA regarding its inventory of excess or surplus Federal property. This Notice is also published in order to comply with the December 12, 1988 Court Order in *National Coalition for the Homeless* v. *Veterans Administration,* No. 88–2503–OG (D.D.C.).

Properties reviewed are listed in this Notice according to the following categories: Suitable/available, suitable/unavailable, and suitable/to be excess, and unsuitable. The properties listed in the three suitable categories have been reviewed by the landholding agencies, and each agency has transmitted to HUD: (1) Its intention to make the property available for use to assist the homeless, (2) its intention to declare the property excess to the agency's needs, or (3) a statement of the reasons that the property cannot be declared excess or made available for use as facilities to assist the homeless.

Properties listed as suitable/available will be available exclusively for homeless use for a period of 60 days from the date of this Notice. Where property is described as for ''off-site use only'' recipients of the property will be required to relocate the building to their own site at their own expense. Homeless assistance providers interested in any such property should send a written expression of interest to HHS, addressed to Theresa Ritta, Office of Enterprise Support Programs, Program Support Center, HHS, room 12–07, 5600 Fishers Lane, Rockville, MD 20857; (301) 443–2265. (This is not a toll-free number.) HHS will mail to the interested provider an application packet, which will include instructions for completing the application. In order to maximize the opportunity to utilize a suitable property, providers should submit their written expressions of interest as soon as possible. For complete details concerning the processing of applications, the reader is encouraged to refer to the interim rule governing this program, 24 CFR part 581.

For properties listed as suitable/to be excess, that property may, if subsequently accepted as excess by GSA, be made available for use by the homeless in accordance with applicable law, subject to screening for other Federal use. At the appropriate time, HUD will publish the property in a Notice showing it as either suitable/available or suitable/unavailable.

For properties listed as suitable/unavailable, the landholding agency has decided that the property cannot be declared excess or made available for use to assist the homeless, and the property will not be available.

Properties listed as unsuitable will not be made available for any other purpose for 20 days from the date of this Notice. Homeless assistance providers interested in a review by HUD of the determination of unsuitability should call the toll free information line at 1–800–927–7588 for detailed instructions or write a letter to Ann Marie Oliva at the address listed at the beginning of this Notice. Included in the request for review should be the property address (including zip code), the date of publication in the **Federal Register**, the landholding agency, and the property number.

For more information regarding particular properties identified in this Notice (i.e., acreage, floor plan, existing sanitary facilities, exact street address), providers should contact the appropriate landholding agencies at the following addresses: INTERIOR: Mr. Michael Wright, Acquisition & Property Management, Department of the Interior, 1801 Pennsylvania Ave. NW., 4th Floor, Washington, DC 20006: (202) 254–5522; (This is not a toll-free number).

Dated: June 6, 2013.

Mark Johnston,

Deputy Assistant Secretary for Special Needs.

TITLE V, FEDERAL SURPLUS PROPERTY PROGRAM FEDERAL REGISTER REPORT FOR 06/14/2013

Suitable/Available Properties

Building

Maryland

Tract #07–118; Cunningham Farm
18440 Shepherdstown Pike
Sharpsburg MD 21782
Landholding Agency: Interior
Property Number: 61201320023
Status: Excess
Comments: off-site removal only; removal may be difficult; unsound structure; deteriorating; 1,190–1,535 sf.; wagon shed; 10 yrs. vacant

Virginia

Tract 03–183 Dent House
9325 Pland Road
Spotsylvania VA 22553
Landholding Agency: Interior
Property Number: 61201320002
Status: Excess
Comments: off-site removal only; maybe difficult to relocated; 775 sf; residential; 2 yrs.: Vacant; structurally sound however, asbestos & lead; contact interior for more info.

Tract 04–128
Carber Property
Spotsylvania VA 22960
Landholding Agency: Interior
Property Number: 61201320003
Status: Excess
Directions: House, tenant farmer house, greenhouse/storage shed, feed bath, storage shed, tenant shed, well house, small barn
Comments: off-site removal only; maybe difficult to relocate; sf. varies; conditions range from poor to dilapidated; vacant btw. 8–10 yrs.; contact interior for more info.

03–181; Dulin House
9401 Plank Road
Spotsvania VA 22553
Landholding Agency: Interior
Property Number: 61201320004
Status: Excess
Comments: off-site removal only; maybe difficult to relocate; 1,536 sf; residential, 5 yrs. vacant; structurally sound however several large holes in interior & no piping; contact interior for more into.

Tract 02–103 Richardson House
700 Sunken Road
Fredericksburg VA 22401
Landholding Agency: Interior
Property Number: 61201320005
Status: Excess
Comments: off-site removal only; maybe difficult to relocate; 2,324 sf; residence 16 yrs. vacant; structurally sound; however several roof leaks, ceiling damaged/lead base paint; contact interior for more info.

[FR Doc. 2013–13822 Filed 6–13–13; 8:45 am]

BILLING CODE 4210–67–P

DEPARTMENT OF THE INTERIOR

Fish and Wildlife Service

[FWS–R8–ES–2013–N138; 1112–0000–81440–F2]

Proposed Low-Effect Habitat Conservation Plan for the City of Santa Cruz Graham Hill Water Treatment Plant, Santa Cruz County, California

AGENCY: Fish and Wildlife Service, Interior.

ACTION: Notice of availability; request for comment.

SUMMARY: We, the U.S. Fish and Wildlife Service (Service), have received an application from the City of Santa Cruz (applicant) for a 30-year incidental take permit under the Endangered Species Act of 1973, as amended (Act). The proposed permit would authorize take of the federally endangered Mount Hermon June beetle (*Polyphylla barbata*) and the federally endangered Zayante band winged grasshopper (*Trimerotropis infantilis*), and will address associated impacts and conservation measures for the federally endangered Ben Lomond spineflower (*Chorizanthe pungens* var. *hartwegiana*), incidental to otherwise lawful activities associated with the operation and maintenance of the existing Graham Hill Water Treatment Plant, construction of new facilities, which have the potential for minor temporary and long-term impacts to Mount Hermon June beetle habitat within Santa Cruz County, California, and restoration activities at the mitigation site.

The Service's proposed action is the issuance of a permit to the City of Santa Cruz for a low-effect habitat conservation plan (HCP) for incidental take of Mount Hermon June beetle and Zayante band-winged grasshopper. Associated impacts and conservation measures for Ben Lomond spineflower would also be included in the HCP. We are requesting comments on the applicant's permit application and on our preliminary determination that the proposed HCP qualifies as a low-effect HCP, eligible for a categorical exclusion under the National Environmental Policy Act (NEPA) of 1969, as amended. The basis for this determination is discussed in the Environmental Action Statement (EAS) and the associated low-effect screening form, which are available for public review, along with the draft HCP.

DATES: Written comments should be received on or before July 15, 2013.

ADDRESSES: You may download a copy of the HCP, draft Environmental Action Statement, Low-Effect Screening Form, and related documents on the Internet at *http://www.fws.gov/ventura,* or you may request documents by U.S. mail or phone (see below). Please address written comments to Diane K. Noda, Field Supervisor, Ventura Fish and Wildlife Office, U.S. Fish and Wildlife Service, 2493 Portola Road, Suite B, Ventura, California 93003. Comments may also be sent by facsimile to (805) 644–3958.

FOR FURTHER INFORMATION CONTACT: Lena Chang, Fish and Wildlife Biologist, at the above address or by calling (805) 644–1766.

SUPPLEMENTARY INFORMATION:

Background

The Mount Hermon June beetle and Zayante band-winged grasshopper were listed by the U.S. Fish and Wildlife Service as endangered on January 1, 1997. The Ben Lomond spineflower was federally listed as endangered on February 4, 1994. Section 9 of the Act (16 U.S.C. 1531 *et seq.*) and its implementing regulations prohibit the ''take'' of fish or wildlife species listed as endangered or threatened. ''Take'' is defined under the Act to include the following activities: ''[T]o harass, harm, pursue, hunt, shoot, wound, kill, trap, capture, or collect, or to attempt to

engage in any such conduct'' (16 U.S.C. 1532); however, under section 10(a)(1)(B) of the Act, we may issue permits to authorize incidental take of listed species. ''Incidental Take'' is defined by the Act as take that is incidental to, and not the purpose of, carrying out of an otherwise lawful activity. Regulations governing incidental take permits for threatened and endangered species are, respectively, in the Code of Federal Regulations at 50 CFR 17.32 and 17.22. Issuance of an incidental take permit also must not jeopardize the existence of federally listed fish, wildlife, or plant species.

However, take of listed plants is not prohibited under the Act unless such take would violate State law. As such, take of plants cannot be authorized under an incidental take permit. Plant species may be included on a permit in recognition of the conservation benefits provided them under a habitat conservation plan. Impacts to Ben Lomond spineflower as a result of restoration and management activities and associated conservation measures at the mitigation site would be addressed in the HCP and the permit. All species included in the incidental take permit would receive assurances under our ''No Surprises'' regulations (50 CFR 17.22(b)(5) and 17.32(b)(5)). In addition to meeting other criteria, actions undertaken through implementation of the HCP must not jeopardize the continued existence of federally listed plant or animal species.

The City of Santa Cruz Water Department is a municipal utility. Santa Cruz is located on the central coast of California, where the San Lorenzo River flows into Monterey Bay at the northern end of the state's Central Coast hydrologic region. The applicant provides water service to an area approximately 30 square miles in size, including the entire city of Santa Cruz, adjoining unincorporated areas of Santa Cruz County, a small part of the city of Capitola, and coastal agricultural lands north of Santa Cruz. As part of the applicant's water system, the applicant operates the Graham Hill Water Treatment Plant. The Graham Hill Water Treatment Plant site contains habitat characteristics of the Zayante Sandhills that support the Mount Hermon June beetle.

The HCP emphasizes protection of habitat through impact avoidance and use of conservation measures designed to avoid or minimize impacts to Mount Hermon June beetle. The applicant will supplement these conservation measures, or avoidance and minimization measures, with habitat restoration and enhancement measures, and other mitigation. Activities to be addressed under the HCP include the installation, use, maintenance, and repair of the applicant's existing Graham Hill Water Treatment Plant, typical expansions to the facility, and restoration activities at the mitigation site.

The proposed HCP would authorize impacts to the Mount Hermon June beetle associated with the applicant's activities at the Graham Hill Water Treatment Plant, potential future impacts to Zayante band-winged grasshopper at the mitigation site should it occupy the site after restoration activities are completed, and impacts to Ben Lomond spineflower at the mitigation site as a result of restoration and management activities. Potential impacts to Mount Hermon June beetle would come from the daily operations and maintenance of the existing facilities and new construction. These activities would include, but not be limited to: inspection and monitoring of the facilities; mulching around ponderosa pines; landscape management; weed management; native planting; maintenance of vehicle access through grading of access roads, parking areas, or staging areas for future construction; facility maintenance; pipeline repair; and construction of new facilities. Specific details regarding these activities may be found in the HCP. Up to 5.7 acres of Mount Hermon June beetle habitat may be lost through implementation of the HCP over 30 years.

The applicant proposes to implement general and specific conservation measures designed to avoid or minimize take of Mount Hermon June beetle and Zayante band-winged grasshopper, and associated impacts to Ben Lomond spineflower. To mitigate temporary impacts, the City will compensate for any future impacts by permanently protecting Sandhills habitat occupied by the Mount Hermon June beetle at the Bonny Doon property. To ensure mitigation in advance for impacts related to City activities covered by the HCP, as a primary strategy, the City will protect 17 acres at the Bonny Doon property in perpetuity. Of the 17 acres to be protected and managed in perpetuity, 5.7 acres will be credited towards the HCP, while the remaining 11.3 acres may be used by the City to mitigate for impacts of future projects. As a secondary strategy, the City may purchase conservation credits at the Zayante Sandhills Conservation Bank. The City will also revegetate any area of temporary habitat loss on Zayante sandy soils at the water treatment facility with plants native to the Zayante Sandhills. Specific details regarding this mitigation measure can be found in the HCP.

Two alternatives to the proposed action are considered in the HCP. Under the No Action Alternative, no permit would be issued and the applicant would avoid take of Mount Hermon June beetle and Zayante band-winged grasshopper, and impacts to Ben Lomond spineflower; however, avoidance of impacts would not be possible for some of the applicant's activities, precluding some critical projects from being completed. Under the Project-by-Project Alternative, take of Mount Hermon June beetle, Zayante band-winged grasshopper, and impacts to Ben Lomond spineflower would be addressed either through section 7 or 10 of the Act on a project-by-project basis. The proposed HCP provides more comprehensive conservation of Mount Hermon June beetle, Zayante band-winged grasshopper, and Ben Lomond spineflower, than either of the two alternatives. In addition, the proposed HCP provides the applicant with long-term predictability concerning the nature of its operations for which incidental take is permitted, avoiding potential facility-compromising delays.

We are requesting comments on our preliminary determination that the applicant's proposal will have minor or negligible effects on the Mount Hermon June beetle, Zayante band-winged grasshopper, and Ben Lomond spineflower; and that the plan qualifies as a low-effect HCP as defined by our Habitat Conservation Planning Handbook (Service 1996). We base our determinations on three criteria: (1) Implementation of the proposed project as described in the HCP would result in minor or negligible effects on federally listed, proposed, and/or candidate species and their habitats; (2) implementation of the HCP would result in minor or negligible effects on other environmental values or resources; and (3) HCP impacts, considered together with those of other past, present, and reasonably foreseeable future projects, would not result in cumulatively significant effects. In our analysis of these criteria, we have made a preliminary determination that the approval of the HCP and issuance of an incidental take permit qualify for categorical exclusions under the NEPA (42 U.S.C. 4321 *et seq.*), as provided by the Department of Interior Manual (516 DM 2 Appendix 2 and 516 DM 8); however, based upon our review of public comments that we receive in response to this notice, this preliminary determination may be revised.

Next Steps

We will evaluate the permit application, including the plan and comments we receive, to determine whether the application meets the requirements of section 10(a) of the Act. We will also evaluate whether issuance of the incidental take permit would comply with section 7 of the Act by conducting an intra-Service section 7 consultation for the plan.

Public Review

We provide this notice under section 10(c) of the Act and the NEPA public involvement regulations (40 CFR 1500.1(b), 1500.2(d), and 1506.6). We are requesting comments on our determination that the applicant's proposal will have a minor or negligible effect on the Mount Hermon June beetle, Zayante band-winged grasshopper, and Ben Lomond spineflower, and that the plan qualifies as a ''low-effect'' HCP as defined by our 1996 Habitat Conservation Planning Handbook. We will evaluate the permit application, including the plan and comments we receive, to determine whether the application meets the requirements of section 10(a) of the Act. We will also evaluate whether issuance of the section 10(a)(1)(B) permit would comply with section 7 of the Act by conducting intra-Service section 7 consultation for the plan. We will use the results of these consultations, in combination with the above findings, in our final analysis to determine whether or not to issue the permits. If the requirements are met, we will issue a permit to the applicant for the incidental take of Mount Hermon June beetle and Zayante band-winged grasshopper. We will make the final permit decision no sooner than 30 days after the date of this notice.

Public Comments

If you wish to comment on the permit applications, plans, and associated documents, you may submit comments by any one of the methods in **ADDRESSES**.

Public Availability of Comments

Before including your address, phone number, email address, or other personal identifying information in your comment, you should be aware that your entire comment, including your personal identifying information, may be made publicly available at any time. While you can ask us in your comment to withhold your personal identifying information from public view, we cannot guarantee that we will be able to do so.

Authority

We provide this notice under section 10 of the Act (16 U.S.C. 1531 *et seq.*) and NEPA regulations (40 CFR 1506.6).

Dated: June 10, 2013.

Diane K. Noda,

Field Supervisor, Ventura Fish and Wildlife Office, Ventura, California.

[FR Doc. 2013–14135 Filed 6–13–13; 8:45 am]

BILLING CODE 4310–55–P

DEPARTMENT OF THE INTERIOR

Fish and Wildlife Service

[FWS–R1–ES–2013–N124; FXES11130100000F5–134–FF01E00000]

Endangered and Threatened Wildlife and Plants; Recovery Permit Applications

AGENCY: Fish and Wildlife Service, Interior.

ACTION: Notice of availability; request for comments.

SUMMARY: We, the U.S. Fish and Wildlife Service, invite the public to comment on the following applications for a recovery permit to conduct activities with the purpose of enhancing the survival of endangered species. The Endangered Species Act of 1973, as amended (Act), prohibits certain activities with endangered species unless a Federal permit allows such activity. The Act also requires that we invite public comment before issuing such permits.

DATES: To ensure consideration, please send your written comments by July 15, 2013.

ADDRESSES: Endangered Species Program Manager, Ecological Services, U.S. Fish and Wildlife Service, Pacific Regional Office, 911 NE. 11th Avenue, Portland, OR 97232–4181. Please refer to the permit number for the application when submitting comments.

FOR FURTHER INFORMATION CONTACT: Colleen Henson, Fish and Wildlife Biologist, at the above address or by telephone (503–231–6131) or fax (503–231–6243).

SUPPLEMENTARY INFORMATION:

Background

The Act (16 U.S.C. 1531 *et seq.)* prohibits certain activities with respect to endangered and threatened species unless a Federal permit allows such activity. Along with our implementing regulations in the Code of Federal Regulations (CFR) at 50 CFR part 17, the Act provides for certain permits, and requires that we invite public comment before issuing these permits for endangered species.

A permit granted by us under section 10(a)(1)(A) of the Act authorizes the permittee to conduct activities (including take or interstate commerce) with respect to U.S. endangered or threatened species for scientific purposes or enhancement of propagation or survival. Our regulations implementing section 10(a)(1)(A) of the Act for these permits are found at 50 CFR 17.22 for endangered wildlife species, 50 CFR 17.32 for threatened wildlife species, 50 CFR 17.62 for endangered plant species, and 50 CFR 17.72 for threatened plant species.

Application Available for Review and Comment

We invite local, State, and Federal agencies, and the public to comment on the following applications. Please refer to the appropriate permit number for the application when submitting comments.

Documents and other information submitted with these applications are available for review by request from the Endangered Species Program Manager at the address listed in the **ADDRESSES** section of this notice, subject to the requirements of the Privacy Act (5 U.S.C. 552a) and the Freedom of Information Act (5 U.S.C. 552).

Permit Number: TE–06459B.

Applicant: USDA Forest Service, Hilo, Hawaii.

The applicant requests a new recovery permit to remove and reduce to possession (collection of seeds and cuttings) *Stenogyne angustifolia* (no common name), remove and reduce to possession (collection of cuttings) *Neraudia ovata* (no common name), and remove and reduce to possession (collection of seeds) *Colubrina oppositifolia* (kauila), *Haplostachys haplostachya* (honohono), *Pleomele hawaiiensis* (halapepe), *Portulaca sclerocarpa* (ihi makole), *Silene lanceolata* (lanceolate catchfly), *Spermolepis hawaiiensis* (Hawaiian spermolepis), *Stenogyne angustifolia* (narrowleaf stenogyne), and *Zanthoxylum hawaiiense* (ae) for the purpose of enhancing their survival.

Permit Number: TE–07458B.

Applicant: Hoku'akua, LLC, Mountain Home, Idaho.

The applicant requests a new recovery permit to take (capture, identify, release, and preserve as museum vouchers) the Snake River Physa (*Physa natricina*) in conjunction with surveys in the Snake River and its tributaries for the purpose of enhancing its survival.

Public Availability of Comments

All comments and materials we receive in response to these requests will be available for public inspection, by appointment, during normal business hours at the address listed in the **ADDRESSES** section of this notice.

Before including your address, phone number, email address, or other personal identifying information in your comment, you should be aware that your entire comment—including your personal identifying information—may be made publicly available at any time. While you can ask us in your comment to withhold your personal identifying information from public review, we cannot guarantee that we will be able to do so.

Authority

We provide this notice under section 10 of the Act (16 U.S.C. 1531 *et seq.*).

Date: June 6, 2013.

Richard R. Hannan,

Acting Regional Director, Pacific Region, U.S. Fish and Wildlife Service.

[FR Doc. 2013–14134 Filed 6–13–13; 8:45 am]

BILLING CODE 4310–55–P

DEPARTMENT OF THE INTERIOR

Bureau of Land Management

[LLNM930000 L51010000.ER0000 LVRWG13G0690]

Notice of Availability of the Final Environmental Impact Statement for the SunZia Southwest Transmission Project in New Mexico and Arizona and Proposed Resource Management Plan Amendments

AGENCY: Bureau of Land Management, Interior.

ACTION: Notice of availability.

SUMMARY: In accordance with the National Environmental Policy Act of 1969, as amended (NEPA), and the Federal Land Policy and Management Act of 1976, as amended (FLPMA), the BLM has prepared a Final Environmental Impact Statement (EIS) and Proposed Resource Management Plan (RMP) amendments for the SunZia Southwest Transmission Line Project (Project), and by this notice is announcing its availability.

DATES: BLM planning regulations state that any person who meets the conditions as described in the regulations may protest the Proposed RMP amendments. Protests must be filed within 30 days of the date that the Environmental Protection Agency (EPA) publishes its Notice of Availability in the **Federal Register**.

ADDRESSES: Copies of the Final EIS/Proposed RMP amendments have been sent to affected Federal, State, tribal, and local government agencies, public libraries in the Project area, and to interested parties that previously requested a copy. A list of the locations where copies of the Final EIS/Proposed RMP amendments are available for public inspection can be found in the ''**SUPPLEMENTARY INFORMATION**'' section below.

A limited number of copies of the document will be available to those who request one. To request a copy, contact Adrian Garcia, BLM Project Manager, BLM New Mexico State Office, 301 Dinosaur Trail, Santa Fe, NM 87508–1560. Interested persons may also review the Final EIS/Proposed RMP amendments on the Internet at *www.blm.gov/nm/sunzia.* All protests of the proposed RMP amendments must be in writing and mailed to one of the following addresses:

Regular mail:	Overnight mail:
BLM Director (210), Attention: Brenda Williams, P.O. Box 71383, Washington, DC 20024–1383.	BLM Director (210), Attention: Brenda Williams, 20 M Street SE., Room 2134LM, Washington, DC 20003.

FOR FURTHER INFORMATION CONTACT: Adrian Garcia, Project Manager, telephone 505–954–2000; address BLM, New Mexico State Office, 301 Dinosaur Trail, Santa Fe, NM 87508–1560; email *agarcia@blm.gov*. Persons who use a telecommunications device for the deaf (TDD) may call the Federal Information Relay Service (FIRS) at 1–800–877–8339 to contact the above individual during normal business hours. The FIRS is available 24 hours a day, 7 days a week, to leave a message or question with the above individual. You will receive a reply during normal business hours.

SUPPLEMENTARY INFORMATION: The Final EIS/Proposed RMP amendments analyze a right-of-way project application by SunZia Transmission, LLC, (Applicant) for the location of two parallel overhead 500 kilovolt (kV) electric transmission lines from the proposed SunZia East Substation site in Lincoln County, New Mexico, to the existing Pinal Central Substation in Pinal County, Arizona. The proposed Project would include two new, single-circuit 500 kV transmission lines located on Federal, State, and private lands. One of the 500 kV transmission lines would be constructed and operated as an alternating current (AC) facility transmission line, and SunZia could construct and operate the other line as either an AC or direct current (DC) facility. Once constructed, the Project would be in operation year-round. The Applicant has applied for a right-of-way grant term from the BLM of 50 years and is evaluating options for a lease term of 50 years or greater on State and private lands.

The requested right-of-way width would be typically 400 feet to accommodate a separation of 200 feet between the two lines. However, it could be up to 1,000 feet wide in areas where terrain poses engineering or construction constraints. Engineering studies would determine those requirements as part of the plan of development. In addition to the SunZia East Substation site, up to three new substations would be constructed and operated at the following sites on private or State lands: The proposed Midpoint Substation site near Deming, New Mexico, in Luna County; the proposed Lordsburg Substation site near Lordsburg, New Mexico, in Hidalgo County; and the proposed Willow-500 kV Substation site, near Willcox, Arizona, in Graham County.

The lengths of the varying Project alternative routes considered and evaluated in the Final EIS/Proposed RMP amendments range between about 460 and 530 miles. The BLM has identified a preferred alternative route, the length of which is about 515 miles. It is estimated that about 185 miles, or 36 percent, of the right-of-way for the preferred route is located on Federal lands administered by four BLM Field Offices in New Mexico (Las Cruces, Socorro, Rio Puerco, and Roswell), as well as Federal lands administered by two BLM Field Offices in Arizona (Safford and Tucson). The BLM preferred route would cross about 135 miles of Federal lands in New Mexico and 50 miles of Federal lands in Arizona. About 273 miles of the BLM preferred alternative route would fall within designated utility corridors. The BLM's New Mexico State Office has been designated the lead office for this right-of-way application.

In September 2008, the Applicant submitted a right-of-way application to the BLM requesting authorization to construct, operate, maintain, and commission two electric transmission lines on public lands.

On May 29, 2009, the BLM published in the **Federal Register** (74 FR 25764) a Notice of Intent (NOI) that initiated the public scoping process for the Project. Three scoping periods, including public meetings, were conducted for the Project between June 2009 and April 2010.

Issues and potential impacts to specific resources were identified during scoping and stakeholder meetings, including:

- Engineering and construction restraints;
- Corridor alignments and alternatives;
- Effects to sedimentation in rivers, soil erosion, and alteration of watersheds;
- Effects to wildlife habitats, migratory birds and waterfowl, other bird species, bighorn sheep, and deserts and grasslands;
- Management of invasive plant species and ensuring effective reclamation;
- Effects to cultural resources and archaeological sites;
- Effects to Native American traditional cultural properties and respected places;
- Effects to visual resources and existing viewsheds;
- Conflicts with current land use plans;
- Impacts on Wilderness areas, livestock grazing and ranching, property values, off-highway vehicle use, and military use;
- Effects to rural lifestyles, tourism, and socioeconomic conditions; and
- Effects on sensitive areas such as Wilderness areas, wildlife refuges, national forests, and military withdrawn lands and airspace.

On May 25, 2012, the EPA's Notice of Availability of the Draft EIS/RMP amendments for the SunZia Southwest Transmission Project was published in the **Federal Register** (77 FR 31355), initiating a 90-day public comment period. The BLM held public meetings in June and July of 2012 in Corona, Socorro, Truth or Consequences, Deming, and Lordsburg, New Mexico; and in Safford, Benson, Tucson, San Manuel, and Eloy, Arizona.

Alternative routes for the proposed transmission lines were divided into four route groups that contain various alternative segments, or subroutes. These are:

Route Group 1: SunZia East Substation to Midpoint Substation—Consists of subroutes 1A, 1A1, 1A2, 1B1, 1B2, 1B2a, and 1B3.

Subroute 1A2 (230.3 miles), the BLM preferred alternative, proceeds northwest from the proposed SunZia East Substation site then continues into Torrance County, about 4 miles north of the Gran Quivira Unit of Salinas Pueblo Missions National Monument, and then enters Socorro County, east of the Sevilleta National Wildlife Refuge. Subroute 1A2 crosses the Rio Grande north of Socorro, and then turns south along an existing transmission line path into Sierra County. The route continues south to the proposed Midpoint Substation site, near Deming, New Mexico. Subroute 1A2 parallels about 141 miles of existing or designated utility right-of-way, and crosses about 108 miles of public land administered by the BLM.

Route Group 2: SunZia East Substation to Midpoint Substation—Generally east of White Sands Missile Range and through the Fort Bliss Army Base within Lincoln, Otero, Doña Ana, and Luna Counties. This group of alternatives was considered during the expanded scoping period of 2010, and then eliminated from detailed study in the Draft EIS/RMP amendments because routes under this group of alternatives would require traversing lands under the jurisdiction of Fort Bliss. Fort Bliss has indicated that overhead transmission lines through its administered lands would have substantial impacts to military operations and would not be compatible with its mission; therefore, Fort Bliss would not grant a right-of-way across lands under its jurisdiction.

Route Group 3: Midpoint Substation to Willow-500 kV Substation—Consists of subroutes 3A, 3A2, and 3B. Subroute 3A2 (123.9 miles), the BLM preferred alternative, is a variation of Subroute 3A. The subroute proceeds west from the proposed Midpoint Substation site then crosses a 115 kV transmission line and U.S. Route 180 about 7.5 miles north of Deming. From that point, Subroute 3A2 proceeds southwesterly then turns northwest to parallel a 345 kV transmission line and pipeline adjacent to the Hidalgo Substation site. The subroute then heads west, to cross the New Mexico-Arizona state line from Hidalgo County into Greenlee County. The subroute proceeds west into Graham County and south of the Hot Well Dunes Recreation Area, then continues through the San Simon Valley to the proposed Willow-500 kV Substation site. Subroute 3A2 parallels about 42 miles of existing or designated utility corridors, and crosses about 62 miles of public land administered by the BLM.

Route Group 4: Willow-500 kV Substation to Pinal Central Substation—Consists of subroutes 4A, 4B, 4C1, 4C2, 4C2a, 4C2b, 4C2c, and 4C3. Subroute 4C2c (161.2 miles), the BLM preferred alternative, follows an existing 345 kV transmission line corridor from the Willow-500 kV Substation site southwest, crossing the San Pedro River about 12 miles north of Benson, Arizona. The route then continues northwesterly, crossing the northeast corner of Pima County, then follows a westerly path through Pinal County, north of Oracle toward the Tortolita Substation, about 25 miles northwest of Tucson. From that point, Subroute 4C2c parallels about 90 miles of existing utilities (including about 72 miles of existing electrical transmission lines). Subroute 4C2c parallels about 90 miles of existing or designated utility corridors, and crosses about 15 miles of public land administered by the BLM.

The Final EIS/Proposed RMP amendments also analyze the environmental consequences of a no action alternative. The no action alternative means that the BLM would deny the right-of-way application for the construction and operation of the proposed SunZia transmission project and would not amend any land use plans. Project facilities, including transmission lines and substations, would not be built and existing land uses and present activities in the Project study area would continue. This alternative does not consider the potential for additional actions that could occur, depending on the decision for the proposed action or alternatives.

The BLM worked with the applicant and the cooperating agencies to identify alternative routes that would conform to existing land use plans and alter the impacts to affected resources. Where the Project does not conform to BLM RMPs, land use plan amendments are proposed to bring the proposed Project into conformance. Proposed plan amendments would comply with applicable Federal laws and regulations and apply only to Federal lands and mineral estate administered by the BLM. Plan amendment alternatives were considered, including multiple-use corridors of varying widths. The BLM preferred alternative is to amend existing RMP visual resource management (VRM) decisions and right-of-way avoidance areas, as described in the Final EIS/Proposed RMP amendments. There are two proposed plan amendments for the BLM preferred alternative:

• Socorro RMP (2010), Socorro Field Office: Modifications to existing VRM decisions and/or to right-of-way avoidance area decisions; and

• Mimbres RMP (1993), Las Cruces District Office: Modifications to existing VRM decisions and/or to right-of-way avoidance area decisions.

Comments on the Draft EIS/RMP amendments received from the public and internal BLM review were considered and incorporated as appropriate into the Final EIS/Proposed RMP amendments. The BLM received more than 900 comment submittals during the Draft EIS/RMP amendments comment period, which contained more than 2,000 unique comments. The Final EIS/Proposed RMP amendments include responses to all substantive comments and revisions to the EIS. In response to comments, modifications, including the following, were made to alternatives analyzed in the Draft EIS/RMP amendments, including the BLM preferred alternative:

• Route Group 1 (Lincoln, Torrance, and Socorro counties, New Mexico): The alternative alignment for Subroute 1A1 was modified to increase the distance between the proposed transmission lines and military operations at the White Sands Missile Range. This is Subroute 1A2, the BLM preferred alternative that is described in the Final EIS.

• Route Group 3 (Hidalgo County, New Mexico; Greenlee, Graham, and Cochise counties in Arizona): Sensitive environmental resources near the Lordsburg Playa and the Peloncillo Mountains Wilderness were identified as issues associated with Subroute 3A1, which was identified as the BLM preferred alternative in the Draft EIS. Subroute 3A2, identified as the BLM preferred alternative in the Final EIS, avoids these sensitive environmental resources. Subroute 3A2 is the same as Subroute 3A, with a modification to a segment of the alignment in the vicinity of the Hot Well Dunes Recreation Area.

• Additional considerations for National Scenic and Historic Trails were included. Instructions for filing a protest with the Director of the BLM regarding the Proposed RMP amendments may be found in the ''Dear Reader'' letter of the Final EIS/Proposed RMP amendments and at 43 CFR 1610.5–2. Email and faxed protests will not be accepted as valid protests unless the protesting party also provides the original letter by either regular or overnight mail postmarked by the close of the protest period. Under these conditions, the BLM will consider the email or faxed protest as an advance copy and it will receive full consideration. If you wish to provide the BLM with such advance notification, please direct faxed protests to the attention of the BLM protest coordinator at 202–245–0028, and emails to *Brenda_Hudgens-Williams@blm.gov*.

All protests, including the follow-up letter to emails or faxes, must be in writing and mailed to the appropriate address, as set forth in the **ADDRESSES** section above.

Copies of the Final EIS/Proposed RMP amendments are available for public inspection during normal business hours at the following locations:

- BLM, Las Cruces District Office, 1800 Marquess Street, Las Cruces, NM 88005–3370
- BLM, Roswell Field Office, 2909 West Second Street, Roswell, NM 88201–2019
- BLM, Socorro Field Office, 901 South Highway 85, Socorro, NM 87801–4168
- BLM, Rio Puerco Field Office, 435 Montano Road NE., Albuquerque, NM 87107–4935
- BLM, New Mexico State Office, 301 Dinosaur Trail, Santa Fe, NM 87508–1560
- New Mexico State Land Office, 310 Old Santa Fe Trail, Santa Fe, NM 87504–1148
- U.S. Army Corps of Engineers, Regulatory Division, 4101 Jefferson Plaza NE., Albuquerque, NM 87109–3435
- U.S. Fish and Wildlife Service, 500 Gold Avenue SW., Albuquerque, NM 87102–3118
- BLM, Gila District Office, 1763 Paseo San Luis, Sierra Vista, AZ 85635–4611
- BLM, Tucson Field Office, 3201 East Universal Way, Tucson, AZ 85756
- BLM, Safford Field Office, 711 14th Avenue, Safford, AZ 85546–3337
- BLM, Arizona State Office, One North Central Avenue, Phoenix, AZ 85004–4427
- Arizona State Land Department, 1616 West Adams, Phoenix, AZ 85007–2614
- Arizona Game and Fish Department, 5000 West Carefree Highway, Phoenix, AZ 85086–5000

Before including your phone number, email address, or other personal identifying information in your protest, you should be aware that your entire protest—including your personal identifying information—may be made publicly available at any time. While you can request that your personal identifying information be withheld from public review, we cannot guarantee that we will be able to do so.

Jesse Juen,

State Director, New Mexico.

[FR Doc. 2013–14110 Filed 6–13–13; 8:45 am]

BILLING CODE 4310–FB–P

DEPARTMENT OF THE INTERIOR

Bureau of Land Management

[LLUT980300–L11200000–PH0000–24–1A]

Utah Resource Advisory Council Subgroup Conference Call

AGENCY: Bureau of Land Management, Interior.

ACTION: Conference Call.

SUMMARY: In accordance with the Federal Land Policy and Management Act and the Federal Advisory Committee Act, the Bureau of Land Management's (BLM) Utah Resource Advisory Council (RAC) Subgroup will host a conference call.

DATES: The Utah RAC Subgroup will host a conference call on Monday, June 24, 2013, from 10:00 a.m.–12:00 p.m., MST.

ADDRESSES: Those attending in person must meet at the BLM, Utah State Office, 440 West 200 South, Salt Lake City, Utah, in the Monument Conference Room on the fifth floor. The conference call will be recorded for purposes of minute-taking.

FOR FURTHER INFORMATION CONTACT: If you wish to listen to the teleconference, orally present material during the teleconference, or submit written material for the Council to consider during the teleconference, please notify Sherry Foot, Special Programs Coordinator, Bureau of Land Management, Utah State Office, 440 West 200 South, Suite 500, Salt Lake City, Utah 84101; phone 801–539–4195; or, *sfoot@blm.gov* by Friday, June 21, 2013.

SUPPLEMENTARY INFORMATION: The Utah Resource Advisory Council (RAC) formed a subgroup to review BLM-Utah's draft three-year National Conservation Lands Strategy. In May 2013, the RAC provided the BLM-Utah State Director with recommended changes to the draft strategy and this meeting was held to discuss how BLM-Utah has incorporated their recommendations into a revised draft strategy. A public comment period will take place immediately following the presentation. The meeting is open to the public; however, transportation,

lodging, and meals are the responsibility of the participating individuals.

Authority: 43 CFR 1784.4–1.

Jenna Whitlock,

Associate State Director.

[FR Doc. 2013–14138 Filed 6–13–13; 8:45 am]

BILLING CODE 4310–DQ–P

DEPARTMENT OF THE INTERIOR

Bureau of Land Management

[61510–8451–0000; MTM 80092]

Public Land Order No. 7815; Extension of Public Land Order No. 6997; Montana

AGENCY: Bureau of Land Management, Interior.

ACTION: Public Land Order.

SUMMARY: This order extends the withdrawal created by Public Land Order No. 6997, as corrected, for an additional 20-year period. The extension is necessary to continue the protection of the United States Fish and Wildlife Service's Charles M. Russell National Wildlife Refuge, which would otherwise expire on September 27, 2013.

DATES: As of September 28, 2013.

FOR FURTHER INFORMATION CONTACT: Danielle Kepford, U.S. Fish and Wildlife Service, P.O. Box 110, 406–538–8706, *Danielle_Kepford@fws.gov,* or Debbie Sorg, Bureau of Land Management, 5001 Southgate Drive, Billings, Montana 59101–4669, 406–896–5045, *dsorg@blm.gov.* Persons who use a telecommunications device for the deaf (TDD) may call the Federal Information Relay Service (FIRS) at 1–800–877–8339 to contact either of the above individuals during normal business hours. The FIRS is available 24 hours a day, 7 days a week, to leave a message or question with either of the above individuals. You will receive a reply during normal business hours.

SUPPLEMENTARY INFORMATION: The purpose for which the withdrawal was first made requires this extension to continue protection of the Charles M. Russell National Wildlife Refuge. The withdrawal extended by this order will expire on September 27, 2033, unless as a result of a review conducted prior to the expiration date pursuant to Section 204(f) of the Federal Land Policy and Management Act of 1976, 43 U.S.C. 1714(f), the Secretary of the Interior determines that the withdrawal shall be further extended.

Order

By virtue of the authority vested in the Secretary of the Interior by Section 204 of the Federal Land and Policy Act of 1976, 43 U.S.C. 1714, it is ordered as follows:

Public Land Order No. 6997 (58 FR 50518–21 (1993)), as corrected (58 FR 58593 (1993)), which withdrew 891,422.36 acres of public mineral estate from location and entry under the United States mining laws (30 U.S.C. Ch. 2), but not from leasing under the mineral leasing laws, to protect the Charles M. Russell National Wildlife Refuge, is hereby extended for an additional 20-year period until September 27, 2033.

Dated: June 4, 2013.

Rhea S. Suh,

Assistant Secretary—Policy, Management and Budget.

[FR Doc. 2013–14115 Filed 6–13–13; 8:45 am]

BILLING CODE 4310–55–P

DEPARTMENT OF THE INTERIOR

Bureau of Land Management

[LLAKF030.16100000.DO0000. LXSILCYK0000]

Notice of Intent To Prepare a Resource Management Plan for the Central Yukon Planning Area Alaska and Associated Environmental Impact Statement

AGENCY: Bureau of Land Management, Interior.

ACTION: Notice of intent.

SUMMARY: In compliance with the National Environmental Policy Act of 1969, as amended (NEPA), the Federal Land Policy and Management Act of 1976, as amended, and the Alaska National Lands Interest Conservation Act of 1980 (ANILCA), as amended, the Bureau of Land Management (BLM) Central Yukon Field Office, Fairbanks, Alaska, intends to prepare a Resource Management Plan (RMP) with an associated Environmental Impact Statement (EIS) for the Central Yukon Planning Area. This notice announces the beginning of the scoping process to solicit public comments and identify issues. The RMP will replace the existing Utility Corridor RMP, Central Yukon RMP, and part of the Southwest Management Framework Plan. Additionally, the RMP will cover lands in the Fairbanks North Star Borough that are currently not included in any management plan.

DATES: This notice initiates the public scoping process for the RMP with the associated EIS. Comments on issues may be submitted in writing until December 11, 2013. The date(s) and location(s) of any scoping meetings will be announced at least 15 days in advance through local media, newspapers, and the BLM-Alaska Web site at: *www.blm.gov/ak.* In order to be included in the Draft RMP/EIS scoping report, all comments must be received prior to the close of the 180-day scoping period or 15 days after the last public meeting, whichever is later. We will provide additional opportunities for public participation upon publication of the Draft RMP/EIS.

ADDRESSES: You may submit comments on issues, planning criteria, and management questions and concerns related to the Central Yukon RMP by any of the following methods:

- In person at public scoping meetings in communities within the planning area. The BLM will announce the meeting dates, times and specific locations through news releases and on the BLM Web site at *www.blm.gov/ak;*
- *Web site: www.blm.gov/ak;*
- *Email: CentralYukon@blm.gov;*
- *Fax:* 907- 474–2282;
- *Mail:* Attn: Central Yukon Field Office, 1150 University Avenue, Fairbanks, AK 99709.

Documents pertinent to this proposal may be examined at the Fairbanks District Office; address: 1150 University Avenue, Fairbanks, AK 99709.

FOR FURTHER INFORMATION CONTACT: For further information and/or to have your name added to our mailing list, contact Jeanie Cole, Planning and Environmental Coordinator, telephone 907–474–2200; address: 1150 University Ave., Fairbanks, AK, 99709; email *j05cole@blm.gov.* Persons who use a telecommunications device for the deaf (TDD) may call the Federal Information Relay Service (FIRS) at 1–800–877–8339 to contact the above individual during normal business hours. The FIRS is available 24 hours a day, 7 days a week, to leave a message or question with the above individual. You will receive a reply during normal business hours.

SUPPLEMENTARY INFORMATION: This document provides notice that the BLM Central Yukon Field Office, Fairbanks, Alaska, intends to prepare a RMP with an associated EIS for the Central Yukon Planning Area. The BLM is announcing the beginning of the scoping process and seeking public input on issues and planning criteria. The planning area is located in central and northern Alaska and encompasses approximately 16 million acres of public land. The purpose of the public scoping process is to identify relevant issues that will

influence the scope of the environmental analysis, including alternatives, and guide the planning process. Preliminary issues for the planning area identified by BLM personnel, Federal, State, and local agencies, and other stakeholders include: Increasing demands for and impacts from recreational use along the Dalton Highway; access and off-highway vehicle use, particularly along the Dalton Highway; increasing demand for mining; impacts from mining on fish and aquatic habitats; opening lands to new mineral entry; disposal of mineral material along the Dalton Highway; allowing the State of Alaska to select lands within the Utility Corridor for conveyance to the state; identification of Areas of Critical Environmental Concern (ACEC); potential additions to the Wild and Scenic Rivers system; management of wilderness characteristics; protection of resources important to maintaining a subsistence lifestyle; the importance of subsistence to local economies and traditional lifestyles; and impacts from climate change. Preliminary planning criteria include:

1. The primary purpose of the lands withdrawn by Public Land Order 5150 is the transportation of energy resources; therefore, the BLM will avoid proposing actions or activities with potential adverse impacts to existing and future energy transportation systems on these lands located within the corridor;

2. The BLM Central Yukon Field Office will encourage opportunities for public participation throughout the planning process;

3. The BLM will recognize and protect valid existing rights;

4. The BLM will consider subsistence uses and minimize adverse impacts in accordance with Section 810 of the ANILCA;

5. The BLM will work cooperatively with State and Federal agencies, Native corporations, Tribes, and municipal governments;

6. The BLM will consider plans and policies of adjacent conservation system units, land owners, and local governments;

7. The BLM will consider Department of the Interior guidance, Alaska Department of Fish and Game (ADF&G) objectives, and Federal Subsistence Board requirements and mandates—in decisions related to wildlife management.

8. The RMP will be consistent with the Bureau's H–1601–1 Land Use Planning Handbook, Appendix C, Program-Specific and Resource-Specific Decision Guidance and applicable BLM manuals and handbooks;

9. The plan will be consistent with the standards and guidance set forth in the Federal Land Policy and Management Act, NEPA, Council Environmental Quality, Historic Preservation Act, Wild and Scenic Rivers Act, Migratory Bird Treaty Act, ANILCA, and other Federal laws, regulations, and policies as required;

10. The plan will be consistent with BLM-Alaska Land Health Standards;

11. The BLM will complete designations for Off-Highway Vehicles for all BLM-managed lands within the planning area according to the regulations found in 43 CFR part 8342;

12. Within the Utility Corridor development nodes, the BLM will assess areas designated by BLM in the Utility Corridor RMP/ROD (1991) for future development (i.e., visitor facilities, restrooms, rest stops, etc.) regarding the location, size, boundaries, and appropriate uses, their long-range development, state or federal management, and affects on adjacent and nearby lands;

13. The plan will address public access needs;

14. The BLM will consider current and potentially new special designations, such as ACECs and Research Natural Areas (RNAs), using the criteria found in 43 CFR 1610.7–2 and 43 CFR part 8223;

15. Review and classification of waterways as eligible for inclusion in the National Wild and Scenic River System will be consistent with the guidance in BLM's 8351 Manual—Wild and Scenic Rivers;

16. The BLM will incorporate Environmental Justice (EJ) considerations in land use planning alternatives to adequately respond to EJ issues facing minority populations, low income communities, and Tribes living near public lands and using public land resources;

17. The plan will assess all BLM-managed lands in the planning area for wilderness characteristics using criteria established by BLM Manual 6310. The RMP will examine options for managing lands with wilderness characteristics and determine the most appropriate land use allocations for these lands. Considering wilderness characteristics in the land use planning process may result in several outcomes, including, but not limited to: (1) Emphasizing other multiple uses as a priority over protecting wilderness characteristics; (2) emphasizing other multiple uses while applying management restrictions (conditions of use, mitigation measures) to reduce impacts to wilderness characteristics; and, (3) the protection of wilderness characteristics as a priority over other uses; and

18. The BLM will manage the Central Arctic Management Area Wilderness Study Area consistent with BLM Manual 6330—Management of BLM Wilderness Study Areas, and ANILCA, until Congress acts on the wilderness recommendation.

You may submit comments on issues; planning criteria; and, management questions and concerns in writing to the BLM at any public scoping meeting, or you may submit them to the BLM using one of the methods listed in the **ADDRESSES** section above. In order to be included in the Draft RMP/EIS scoping report, all comments must be received prior to the close of the 180-day scoping period or 15 days after the last public meeting, whichever is later. Before including your address, phone number, email address, or other personal identifying information in your comment, you should be aware that your entire comment—including your personal identifying information—may be made publicly available at any time. While you can ask us in your comment to withhold your personal identifying information from public review, we cannot guarantee that we will be able to do so. The BLM will evaluate identified issues to address in the plan, and will place them into one of three categories:

1. Issues to be resolved in the plan;

2. Issues to be resolved through policy or administrative action; or,

3. Issues beyond the scope of this plan.

The BLM will provide an explanation in the Draft RMP/Draft EIS as to why an issue was placed in category two or three. The public is also encouraged to help identify any management questions and concerns that should be addressed in the plan. The BLM will work collaboratively with interested parties to identify the management decisions that are best suited to local, regional, and national needs and concerns.

The BLM will use the NEPA public participation requirements to assist the agency in satisfying the public involvement requirements under Section 106 of the National Historic Preservation Act (NHPA) (16 U.S.C. 470(f)) pursuant to 36 CFR 800.2(d)(3). The information about historic and cultural resources within the area potentially affected by the proposed action will assist the BLM in identifying and evaluating impacts to such resources in the context of both NEPA and Section 106 of the NHPA.

The BLM will consult with Federally Recognized Indian tribes on a government-to-government basis in accordance with Executive Order 13175

and other policies. Tribal concerns, including impacts on Indian trust assets and potential impacts to cultural resources, will be given due consideration. Federal, State, and local agencies, along with tribes and other stakeholders that may be interested in or affected by the proposed action that the BLM is evaluating, are invited to participate in the scoping process and, if eligible, may request or be requested by the BLM to participate in the development of the environmental analysis as a cooperating agency.

The BLM will use an interdisciplinary approach to develop the plan in order to consider the variety of resource issues and concerns identified. Specialists with expertise in the following disciplines will be involved in the planning process: minerals and geology, outdoor recreation, archeology, wildlife, fisheries, lands and realty, hydrology, soils, vegetation, air quality, subsistence, and socioeconomics.

Authority: 40 CFR 1501.7, 43 CFR 1610.2.

Ted A. Murphy,

Acting State Director.

[FR Doc. 2013–14031 Filed 6–13–13; 8:45 am]

BILLING CODE 4310–JA–P

DEPARTMENT OF THE INTERIOR

Bureau of Land Management

[LLMT040000.L16100000.DP0000. LXSS059E0000]

Notice of Availability of Draft Resource Management Plan and Associated Environmental Impact Statement for the South Dakota Field Office Management Plan Revision, SD

AGENCY: Bureau of Land Management, Interior.

ACTION: Notice of availability.

SUMMARY: In accordance with the National Environmental Policy Act of 1969, as amended (NEPA), and the Federal Land Policy and Management Act of 1976, as amended (FLPMA), the Bureau of Land Management (BLM) has prepared a Draft Resource Management Plan (RMP) and Draft Environmental Impact Statement (EIS) for the South Dakota Field Office and by this notice is announcing the opening of the comment period.

DATES: To ensure that comments will be considered, the BLM must receive written comments on the draft RMP/EIS within 90 days following the date the Environmental Protection Agency publishes its notice of the draft RMP/EIS in the **Federal Register**. The BLM will announce future meetings or hearings and any other public participation activities at least 15 days in advance through public notices, media releases, and/or mailings.

ADDRESSES: You may submit comments related to the South Dakota Field Office draft RMP/EIS by any of the following methods:

- *Email: BLM_MT_South_Dakota_RMP@blm.gov.*
- *Fax:* 605–892–7015.
- South Dakota Field Office, Attn: RMP Project Manager, 310 Roundup Street, Belle Fourche, SD 57717.

Copies of the draft RMP/EIS are available at the South Dakota Field Office at the address above or may be viewed at *http://www.blm.gov/mt/st/en/fo/south_dakota_field/rmp.html.*

FOR FURTHER INFORMATION CONTACT: Mitch Iverson, RMP Project Manager at 605–892–7008; or Marian Atkins, BLM South Dakota Field Manager, at 605–892–7000, at 310 Roundup Street, Belle Fourche, SD 57717, or via email *BLM_MT_South_Dakota_RMP@blm.gov.* Persons who use a telecommunications device for the deaf (TDD) may call the Federal Information Relay Service (FIRS) at 1–800–877–8339 to contact the above individuals during normal business hours. The FIRS is available 24 hours a day, 7 days a week, to leave a message or question with the above individuals. You will receive a reply during normal business hours.

SUPPLEMENTARY INFORMATION: The planning area includes lands within the BLM South Dakota Field Office administrative boundaries. The planning area consists of BLM-administered surface lands, totaling 274,239 acres, and BLM-administered Federal mineral estate, totaling 1,715,677 acres. Over 98 percent of the BLM-administered surface and Federal mineral estate in the decision area is located in western South Dakota. Counties with substantial amounts of BLM-administered surface or mineral estate (over 1 percent of the county land base) include Butte, Custer, Fall River, Haakon, Harding, Lawrence, Meade, Pennington, Perkins, and Stanley counties in western South Dakota. Other counties with small amounts of BLM-administered surface or federal minerals (less than 1 percent of the county land base) include Bennett, Bon Homme, Brule, Campbell, Charles Mix, Clark, Clay, Corson, Dewey, Edmunds, Faulk, Gregory, Hand, Hughes, Hyde, Jackson, Jones, Lyman, Marshall, McPherson, Mellette, Potter, Sully, Tripp, Walworth, Yankton, and Ziebach counties in South Dakota. The RMP will fulfill the needs and obligations set forth by NEPA, FLPMA, and BLM management policies. An updated inventory of lands with wilderness characteristics was completed for the RMP planning area and data from the inventory was analyzed in the Draft RMP/EIS. The revised RMP will replace the South Dakota RMP of 1986, as amended, and provide the South Dakota Field Office with an updated framework in which to administer BLM public lands.

The formal scoping period began with the publication of the Notice of Intent (NOI) in the **Federal Register** on July 19, 2007 (72 FR 39638). From August through October 2007, nine scoping meetings were held across the planning area. In addition to the nine scoping meetings, four open house meetings were held to address the concerns of Native American tribes. During scoping, the BLM requested public input to identify resource issues and concerns, management alternatives, or other ideas to help in determining future land use decisions for the planning area. Initially, the **Federal Register** NOI announced scoping for both North Dakota and South Dakota RMP revisions; however, based on the diverse planning issues and other management considerations, the South Dakota RMP revision continued ahead, and an RMP revision specific to North Dakota BLM will be addressed at a later date.

The issues raised during scoping included energy development, vegetation management, wildlife habitat, special status species management, Greater Sage-Grouse, travel, access, commercial uses, land tenure adjustments, visual resource management, and climate change. The South Dakota draft RMP/EIS addresses the conservation needs of the Greater Sage-Grouse as part of the joint BLM–U.S. Forest Service national effort to sustain the species and its habitat through multiple land management plans across 10 western states. The BLM invited local, State, Federal, and tribal representatives to participate as cooperating agencies on the South Dakota RMP/EIS. The BLM invited these entities to participate because they have jurisdiction by law or because they could offer special expertise. Eleven cooperating-agency meetings were held from 2008 to 2012. These meetings focused on goals, issues, and the development of management alternatives.

The draft RMP/EIS includes a range of management actions within four management alternatives, including the No Action Alternative. These alternatives are designed to address the goals, management challenges, and issues raised during scoping.

The four alternatives are:

Alternative A: Continues existing management practices (No Action Alternative).

Alternative B: Emphasizes commercial resource development and use while providing adequate levels of resource protection.

Alternative C: Emphasizes conservation of natural resources while providing for compatible development and use.

Alternative D: Provides development opportunities while protecting high value and sensitive resources (Preferred Alternative).

The preferred alternative has been identified as described in 40 CFR 1502.14(e). However, identification of a preferred alternative does not represent the final agency decision. The BLM encourages comments on all alternatives and management actions described in the draft RMP/EIS and will assess and consider public comments properly received.

Pursuant to 43 CFR 1610.7–2(b), this notice announces a concurrent public comment period on proposed Areas of Critical Environmental Concern (ACEC). A total of two ACECs are currently designated in the existing plan and were re-evaluated and addressed in this draft RMP/EIS All alternatives would proposed to maintain the two existing ACECs. The proposed resource use limitations, by alternative for each ACEC is summarized below:

Fort Meade Recreation Area ACEC (6,574 Acres)

- Relevant and Important Values: Historical and archeological.
- Limitations on the Following Uses: Closed to leasable and salable minerals, closed to geophysical exploration, recommended for withdrawal from appropriation under the mining laws.
- Other Restrictions: The area would be a Right-of-Way (ROW) exclusion area except in designated ROW corridors. Motorized vehicle use would be limited to designated roads and trails. Snowmobiles or machines specifically equipped to travel over snow would be prohibited. Closed to construction of new roads except for rerouting of existing roads to address resource impacts or safety issues. The back country byway that traverses the southern portion of the ACEC would continue to be designated as a back country byway.

Fossil Cycad ACEC (320 Acres)

- *Relevant and Important Values:* Paleontological.
- *Proposed Use Limitations:* Locatable Federal minerals would be recommended for withdrawal from appropriation under the mining laws. The area would be closed to fluid minerals or have a no surface occupancy and use restriction for fluid minerals within the ACEC depending on the alternative selected. The area would be closed to salable Federal minerals and no sale of forest products would be allowed.
- *Other Restrictions:* The ACEC would be managed as a ROW avoidance area or ROW exclusion area depending on the alternative selected.

All alternatives propose to maintain the Fort Meade and Fossil Cycad ACECs. Under alternatives B and D, up to 200 acres in the existing Fort Meade ACEC would be made available for land transfer to the U.S. Department of Veterans Affairs for expansion of the Black Hills National Cemetery, up to 50 acres in the existing ACEC would be made available for transfer to the South Dakota National Guard for facilities, and up to 6 acres in the existing ACEC would be made available for transfer to the City of Sturgis. Additional action and appropriate environmental review would occur and could potentially result in a decrease in the size of the Fort Meade ACEC from 6,574 to 6,318 acres.

Alternative A would continue with the present National Register of Historic Places District for the Fort Meade ACEC and would include 3,200 acres. Alternative B would recommend a formal nomination of Fort Meade as a National Register Landmark listing of 6,574 acres. Alternative C would propose to manage Greater Sage-Grouse Protection Priority habitat as an ACEC (93,266 acres). Within this ACEC in this alternative, rights-of-way would be excluded, leasable and salable minerals would be closed, and locatable minerals would be recommended for withdrawal from appropriation under the mining laws. Under Alternative C, Federal minerals in the abandoned Black Hills Army Depot and the former town site of Igloo would be closed to exploration and development of leasable and salable minerals. Alternative C would recommend the revision of the National Register of Historic Places Fort Meade District nomination to incorporate 3,370 additional acres inside the District Boundary and incorporate the entire military reservation. Total acres in the historic district would be changed to 6,574 acres for the Fort Meade ACEC. Alternative D would also nominate the Fort Meade ACEC for National Historic Landmark nomination, contingent on other partnering agency cooperation.

Following the close of the public review and comment period on this draft RMP/EIS, public comments will be used to prepare the BLM South Dakota Field Office Proposed RMP and Final EIS. The BLM will respond to substantive comments received during the draft RMP/EIS review period by making appropriate revisions to the document, or by explaining why a comment did not warrant a change. After comments received on the draft RMP/EIS have been considered and appropriate revisions are made, the BLM will issue the Proposed RMP and Final EIS. A notice of the availability for the Proposed RMP and Final EIS will be published in the **Federal Register**.

Please note that public comments and information submitted including names, street addresses, and email addresses of persons who submit comments will be available for public review and disclosure at the above address during regular business hours (8 a.m. to 4 p.m.), Monday through Friday, except holidays.

Before including your address, phone number, email address, or other personal identifying information in your comment, be advised that your entire comment—including your personal identifying information—may be made publicly available at any time. While you can ask us in your comment to withhold from public review your personal identifying information, we cannot guarantee that we will be able to do so.

Authority: 40 CFR 1506.6, 40 CFR 1506.10, 43 CFR 1610.2.

Katherine P. Kitchell,

Acting State Director.

[FR Doc. 2013–14029 Filed 6–13–13; 8:45 am]

BILLING CODE 4310–DN–P

DEPARTMENT OF THE INTERIOR

National Park Service

[NPS–PWR–MOJA–12321; PS.SMOJA0003]

Minor Boundary Revision at Mojave National Preserve

AGENCY: National Park Service, Interior.

ACTION: Notification of boundary revision.

SUMMARY: Notice is hereby given that, pursuant to 16 U.S.C. 460*l*-9(c)(1), the boundary of Mojave National Preserve is modified to include 7.12 acres of improved land identified as Tract 103–28, a portion of tax parcel number 573–021–02. Fee simple interest in the land will be donated to the United States. The land is located in San Bernardino County, California, immediately adjacent to the current northern boundary of Mojave National Preserve.

Notice is further given that, pursuant to 16 U.S.C. 460*l*-9(c)(1), the boundary of Mojave National Preserve is modified to exclude 48.14 acres of improved land identified as Tract 114–05, a portion of tax parcel number 0544–033–09. No change in ownership will result from this action. The land is located in San Bernardino County, California, at the northwest boundary of the preserve in the unincorporated area of Baker. The boundary revisions are depicted on Map No. 170/115,469 dated October 2012. The map is available for inspection at the following locations: National Park Service, Land Resources Program Center, Pacific West Region, 333 Bush Street, Suite 500, San Francisco, California 94104, and National Park Service, Department of the Interior, Washington, DC 20240.

FOR FURTHER INFORMATION CONTACT: Chief Realty Officer Greg Gress, National Park Service, Pacific Land Resources Program Center, 333 Bush Street, Suite 500, San Francisco, California 94104, telephone (415) 623–2120.

DATES: The effective date of this boundary revision is June 14, 2013.

SUPPLEMENTARY INFORMATION: 16 U.S.C. 460*l*-9(c)(1) provides that, after notifying the House Committee on Natural Resources and the Senate Committee on Energy and Natural Resources, the Secretary of the Interior is authorized to make this boundary revision upon publication of notice in the **Federal Register**. The Committees have been notified of this boundary revision. The inclusion of Tract 103–28 will enable the United States to accept a donation of land as compensation for a wastewater pipeline failure and resulting hazardous spill, and to more fully educate the public regarding the desert tortoise life cycle, threats and recovery efforts. The exclusion of Tract 114–05 will resolve an unauthorized land use issue and have no effect on its ownership or use.

Dated: May 23, 2013.

Christine S. Lehnertz,

Regional Director, Pacific West Region.

[FR Doc. 2013–14066 Filed 6–13–13; 8:45 am]

BILLING CODE 4312–FF–P

DEPARTMENT OF JUSTICE

Office of the Attorney General

[Docket No. OAG 144; AG Order No. 3391–2013]

Pilot Project for Tribal Jurisdiction Over Crimes of Domestic Violence

AGENCY: Office of the Attorney General, Justice.

ACTION: Notice; solicitation of comments and preliminary expressions of interest.

SUMMARY: This notice proposes procedures for an Indian tribe to request designation as a participating tribe under section 204 of the Indian Civil Rights Act of 1968, as amended, on an accelerated basis, pursuant to the voluntary pilot project described in section 908(b)(2) of the Violence Against Women Reauthorization Act of 2013 (''the Pilot Project''), and also proposes procedures for the Attorney General to act on such a request. This notice also invites public comment on the proposed procedures and solicits preliminary expressions of interest from tribes that may wish to participate in the Pilot Project.

DATES: Preliminary expressions of interest from tribes are due on or before July 15, 2013. Comments on the proposed procedures are due on or before September 12, 2013.

ADDRESSES: Mr. Tracy Toulou, Director, Office of Tribal Justice, Department of Justice, 950 Pennsylvania Avenue NW., Room 2310, Washington, DC 20530, email *OTJ@usdoj.gov.*

FOR FURTHER INFORMATION CONTACT: Mr. Tracy Toulou, Director, Office of Tribal Justice, Department of Justice, at (202) 514–8812 (not a toll-free number) or *OTJ@usdoj.gov.*

SUPPLEMENTARY INFORMATION: In addition to mailing or emailing comments and preliminary expressions of interest to the Director, Office of Tribal Justice, you may submit comments and preliminary expressions of interest electronically or view an electronic version of this notice at *http://www.regulations.gov.* To ensure proper handling, please reference OAG Docket No. 144 on your correspondence. The Department of Justice strongly encourages electronic or email submissions, as hard copies sent by mail may be subject to significant delays.

The electronic Federal Docket Management System will accept comments or preliminary expressions of interest until 11:59 p.m. Eastern Time on the last day of the relevant period. Late-filed comments and preliminary expressions of interest will be considered only to the extent practicable.

Posting of Public Comments. Please note that all comments and preliminary expressions of interest received are considered part of the public record and may be made available for public inspection online at *http://www.regulations.gov.* Such information includes personal identifying information (such as your name, address, etc.) that you might voluntarily submit.

You are not required to submit personal identifying information in order to comment or provide a preliminary expression of interest. If you want to submit personal identifying information (such as your name, address, etc.) but do not want it to be posted online, you must include the phrase ''Personal Identifying Information'' in the first paragraph of your submission. You also must locate all the personal identifying information you do not want posted online in the first paragraph of your submission and identify what information you want redacted.

If you want to submit confidential business information but do not want it to be posted online, you must include the phrase ''Confidential Business Information'' in the first paragraph of your submission. You also must prominently identify confidential business information to be redacted within the submission. If a submission has so much confidential business information that it cannot be effectively redacted, all or part of that submission may not be posted on *http://www.regulations.gov.*

Personal identifying information and confidential business information identified and located as set forth above will be placed in the agency's public docket file, but not posted online. If you wish to inspect the agency's public docket file in person by appointment, please see the **FOR FURTHER INFORMATION CONTACT** section.

Discussion

1. Statutory Background

Overview

On March 7, 2013, President Obama signed into law the Violence Against Women Reauthorization Act of 2013 (VAWA 2013).[1] Title IX of VAWA 2013, entitled ''Safety for Indian Women,'' contains section 904 (Tribal Jurisdiction over Crimes of Domestic Violence) and

[1] Public Law 113–4, 127 Stat. 54 (2013); *see* Remarks on Signing the Violence Against Women Reauthorization Act of 2013, 2013 Daily Comp. Pres. Docs. 139 (Mar. 7, 2013).

section 908 (Effective Dates; Pilot Project), both of which were initially drafted and proposed to Congress by the Department of Justice in 2011.[2] The purposes of these sections are to decrease domestic violence in Indian country, to strengthen the capacity of Indian tribes to exercise their inherent sovereign power to administer justice and control crime, and to ensure that perpetrators of domestic violence are held accountable for their criminal behavior.[3]

Section 904 recognizes the inherent power of ''participating tribes'' to exercise ''special domestic violence criminal jurisdiction'' (SDVCJ) over certain defendants, regardless of their Indian or non-Indian status, who commit acts of domestic violence or dating violence or violate certain protection orders in Indian country. Section 904 also specifies the rights that a participating tribe must provide to defendants in SDVCJ cases.

Section 908(b)(1) provides that tribes generally cannot exercise SDVCJ until at least two years after the date of VAWA 2013's enactment—that is, on or after March 7, 2015. However, section 908(b)(2) establishes a ''Pilot Project'' that authorizes the Attorney General, in the exercise of his discretion, to grant a tribe's request to be designated as a ''participating tribe'' on an accelerated basis and to commence exercising SDVCJ on a date (prior to March 7, 2015) set by the Attorney General, after coordinating with the Secretary of the Interior, consulting with affected tribes, and concluding that the tribe's criminal justice system has adequate safeguards in place to protect defendants' rights. This notice proposes procedures for tribes to make such requests and for the Department of Justice to grant or deny them, invites public comment on these proposed procedures, and also solicits preliminary expressions of interest from tribes that may wish to participate in the Pilot Project.

Domestic Violence in Indian Country

Congress found that Native American women suffer domestic violence and dating violence at epidemic rates, and often at the hands of non-Indian abusers.[4] And Census data show that a large fraction of Indian-country residents are non-Indian and that tens of thousands of Native American married women have non-Indian husbands.[5]

Domestic violence and dating violence committed in Indian country by Indian abusers against their Indian spouses, intimate partners, and dating partners generally fall within the criminal jurisdiction of the tribe. But prior to the effective date of the tribal provisions in VAWA 2013, if the victim is Indian and the perpetrator is non-Indian, the tribe lacks criminal jurisdiction as a matter of federal law and the crime can be prosecuted only by the United States or, in some circumstances, by the state in which the tribe's Indian country is located. Even violent crimes committed by a non-Indian husband against his Indian wife, in the presence of their Indian children, in their home on the Indian reservation, cannot be prosecuted by the tribe.[6] This jurisdictional scheme has proved ineffective in ensuring public safety. Too often, crimes go unprosecuted and unpunished, and the violence escalates.

The History of the Jurisdictional Gap

This jurisdictional gap has not always existed. In the early days of the Republic, tribes routinely, and with the United States' assent, punished non-Indians who committed acts of violence on tribal lands. For example, the very first Indian treaty ratified by the United States Senate under the Federal Constitution—the 1789 Treaty with the Wyandot, Delaware, Ottawa, Chippewa, Potawatomi, and Sac Nations—recognized that, ''[i]f any person or persons, citizens or subjects of the United States, or any other person not being an Indian, shall presume to settle upon the lands confirmed to the said [Indian tribal] nations, he and they shall be out of the protection of the United States; and the said nations may punish him or them in such manner as they see fit.''[7] Similar language appeared in the last Indian treaty ratified before the Constitutional Convention—the 1786 Treaty with the Shawnee Nation.[8]

As recently as the 1970s, dozens of Indian tribes exercised criminal jurisdiction over non-Indians. But in 1978, in *Oliphant* v. *Suquamish Indian Tribe,*[9] the Supreme Court created federal common law preempting the exercise of the tribes' inherent sovereign power to prosecute non-Indians.[10] The *Oliphant* Court noted, however, that Congress has the constitutional authority to override the Court's holding and restore Indian tribes' power to exercise criminal jurisdiction over non-Indians.[11] Then-Justice Rehnquist, writing for the majority in *Oliphant,* expressly stated that the increasing sophistication of tribal court systems, the protection of defendants' procedural rights under the Indian Civil Rights Act of 1968,[12] and the prevalence of non-Indian crime in Indian country were all ''considerations for Congress to weigh'' in deciding whether to authorize Indian tribes to try non-Indians.[13]

Congress's New Law Recognizing Special Domestic Violence Criminal Jurisdiction

In enacting VAWA 2013, Congress expressly recognized tribes' inherent power to resume exercising criminal jurisdiction over non-Indians. That recognition extended, however, only to crimes of domestic violence or dating violence and criminal violations of certain protection orders that occur in Indian country, in cases in which certain conditions are met. Specifically, the cases must have Indian victims, the defendants must reside in or have other specified significant ties to the prosecuting tribe, and the tribe's criminal justice system must have adequate safeguards in place to fully protect defendants' rights. Recognizing that many tribes may need time to implement those safeguards, Congress set an effective date two years after the enactment of VAWA 2013 (i.e., March 7, 2015), while giving tribes that are ready

[2] *See* Letter from Ronald Weich, Assistant Attorney General, to the Hon. Joseph R. Biden, Jr., President, United States Senate, at 1–2 & attachments (July 21, 2011).

[3] *See* S. Rep. No. 112–153, at 8–11, 32 (2012); *see also* S. 1763, 112th Cong., at 1–2 (as reported by the S. Comm. on Indian Affairs, Dec. 27, 2012) (long title listing bill's purposes); H.R. 757, 113th Cong., at 1 (2013) (same).

[4] *See* S. Rep. No. 112–153, at 3, 7–11, 32 (2012) (citing studies); *see also* Tribal Law and Order Act of 2010, Public Law 111–211, tit. II, sec. 202(a)(5), 124 Stat. 2258, 2262.

[5] *See* S. Rep. No. 112–153, at 9 (2012); U.S. Census Bureau, 2010 Census Briefs, *The American Indian and Alaska Native Population: 2010,* at 13–14 & tbl. 5 (2012) (showing that 1.1 million American Indians and 3.5 million non-Indians reside in American Indian areas); U.S. Census Bureau, Census 2010 Special Tabulation, Census 2010 PHC–T–19, Hispanic Origin and Race of Coupled Households: 2010, *Table 1, Hispanic Origin and Race of Wife and Husband in Married-Couple Households for the United States: 2010* (2012) (analyzing married-couple households nationwide, regardless of whether they reside within or outside Indian country, and showing that more than 54% of Indian wives have non-Indian husbands).

[6] The tribal provisions of VAWA 2013 are gender-neutral; but in the interests of brevity, this notice sometimes uses male pronouns or examples to describe perpetrators of domestic violence or dating violence and female pronouns or examples to describe their victims.

[7] Treaty with the Wyandot, Delaware, Ottawa, Chippewa, Potawatomi, and Sac Nations, art. IX, Jan. 9, 1789, 7 Stat. 28, 30.

[8] *See* Treaty with the Shawnee Nation, art. VII, Jan. 31, 1786, 7 Stat. 26, 27.

[9] 435 U.S. 191 (1978).

[10] *See id.* at 195–212.

[11] *See id.* at 195 & n.6, 206, 210–12.

[12] Public Law 90–284, tit. II, 82 Stat. 77 (1968).

[13] *Oliphant,* 435 U.S. at 212; *see also United States* v. *Lara,* 541 U.S. 193, 206 (2004) (holding that the Constitution allows Congress to override '''*judicially made* Indian law''' (quoting *Oliphant,* 435 U.S. at 206) (emphasis added in *Lara*)).

sooner the opportunity to participate in a Pilot Project at the Attorney General's discretion.

Section 904 of VAWA 2013 adds a new section 204 to the Indian Civil Rights Act of 1968 (ICRA).[14] ICRA is codified at 25 U.S.C. 1301–1303. Section 204 of ICRA will be codified at 25 U.S.C. 1304, so this notice cites that United States Code section when referring to the new law.

The Pilot Project established by VAWA 2013's section 908(b)(2) focuses specifically on the power of a ''participating tribe'' to exercise SDVCJ under subsections (b), (c), and (d) of 25 U.S.C. 1304. A ''participating tribe'' is simply a federally recognized Indian tribe (as defined in 25 U.S.C. 1301(1)) that elects to exercise SDVCJ over the tribe's Indian country (as defined in 18 U.S.C. 1151).

Becoming a ''participating tribe'' and exercising SDVCJ—whether as part of the Pilot Project between now and March 2015, or at any time after March 2015—are entirely voluntary. There is absolutely no requirement, and no expectation, that any particular tribe or any specific number of tribes will choose to become participating tribes and exercise SDVCJ. VAWA 2013 does not impose an unfunded mandate upon any tribe or diminish the criminal jurisdiction of the United States. Tribes that do not choose to participate in the Pilot Project may nonetheless become participating tribes later, so long as they satisfy the statutory requirements.

SDVCJ, or special domestic violence criminal jurisdiction, is defined in section 1304(a)(6) to mean ''the criminal jurisdiction that a participating tribe may exercise under this section but could not otherwise exercise.'' Nearly all tribes that possess governmental powers over an area of Indian country can already exercise criminal jurisdiction over any Indian in that area (whether the defendant is a member of the prosecuting tribe or a ''nonmember Indian''). For these tribes, therefore, SDVCJ effectively is confined to criminal jurisdiction over non-Indians. Here, the term ''non-Indian'' means any person who is not an Indian as defined in 25 U.S.C. 1301(4) and thus could not be subject to federal criminal jurisdiction under the Major Crimes Act, 18 U.S.C. 1153.[15]

The Nature of Special Domestic Violence Criminal Jurisdiction

Subsection (b) of section 1304 describes the nature of SDVCJ. Paragraph (1) of that subsection states that a participating tribe's governmental powers include ''the inherent power of that tribe, which is hereby recognized and affirmed, to exercise [SDVCJ] over all persons.'' Congress patterned that language after the 1991 federal statute that expressly recognized and affirmed tribes' inherent power to exercise criminal jurisdiction over all Indians, implicitly including nonmember Indians.[16] The Supreme Court upheld the 1991 statute as a constitutional exercise of Congress's authority in *United States* v. *Lara.*[17]

Paragraphs (2) and (3) of subsection 1304(b) clarify that a participating tribe may exercise SDVCJ only concurrently, as the new law does not alter federal (or state) criminal jurisdiction. Importantly, the prohibition against double jeopardy does not prevent a defendant from being tried for the same conduct by more than one sovereign government. So, for example, a defendant who has been acquitted or convicted in a federal criminal proceeding can be tried for the same conduct in a subsequent tribal criminal proceeding. As is always the case when a case falls under concurrent criminal jurisdiction, coordination between jurisdictions will help ensure that investigative and prosecutorial resources are deployed efficiently and that the same defendant is not expected to appear at two different trials simultaneously.

Paragraph (4) sets forth two important exceptions to participating tribes' exercise of SDVCJ. First, subparagraph (A) provides that there is no SDVCJ over an alleged offense if neither the defendant nor the alleged victim is an Indian. Cases involving only non-Indians typically fall within a state's exclusive criminal jurisdiction. SDVCJ will be exercised in cases with Indian victims and non-Indian defendants. Second, subparagraph (B) limits SDVCJ to cases in which the defendant has significant ties to the participating tribe that is seeking to prosecute him. Specifically, the defendant must (1) Reside in the tribe's Indian country; (2) be employed in the tribe's Indian country; or (3) be a spouse, intimate partner, or dating partner either of an Indian who resides in the tribe's Indian country or of a member of the tribe. Both of these two exceptions, as described in subparagraphs (A) and (B), are jurisdictional, so the prosecution will bear the burden of proving these jurisdictional facts beyond a reasonable doubt.

The Criminal Conduct Subject to Special Domestic Violence Criminal Jurisdiction

Subsection (c) of 25 U.S.C. 1304, the second of the three key subsections for present purposes, describes the criminal conduct potentially encompassed by a participating tribe's SDVCJ. The only types of criminal conduct that are subject to a tribe's exercise of SDVCJ are (1) acts of domestic violence or dating violence that occur in the tribe's Indian country, and (2) violations of certain protection orders that occur in the tribe's Indian country. The terms ''domestic violence'' and ''dating violence'' are defined in 25 U.S.C. 1304(a)(2) and (1), respectively.

Criminal conduct that occurs outside of Indian country is not covered. In addition, unless a violation of a protection order is involved, crimes of child abuse or elder abuse and crimes between two strangers (including sexual assaults) generally are not covered.

Subsection (c) limits the categories of criminal conduct that are subject to SDVCJ. It does not define any criminal offense. The criminal offenses and their elements are a matter of tribal, not federal, law.

The Rights of Criminal Defendants in SDVCJ Cases

Subsection (d) of 25 U.S.C. 1304, the third key subsection for present purposes, describes the federal statutory rights that participating tribes must provide to defendants when exercising SDVCJ. Although the United States Constitution, which constrains the federal and state governments, has never applied to Indian tribes (which were not invited to, and did not attend, the 1787 Constitutional Convention), that fact does not leave the rights of individual defendants in tribal courts unprotected. Both tribal law and federal statutory law provide important protections for criminal defendants' rights. The tribal courts' application of the federal statutory rights described in subsection 1304(d) should be comparable to state courts' application of the corresponding federal constitutional rights in similar cases.

[14] Public Law 90–284, tit. II, 82 Stat. 77 (1968).

[15] Due to a Senate amendment, VAWA 2013's section 910(a) provides that the amendments made by section 904, to be codified at 25 U.S.C. 1304, apply in Alaska only to the Indian country of the Metlakatla Indian Community, Annette Island Reserve. In addition, the Supreme Court held in *Alaska* v. *Native Village of Venetie Tribal Government,* 522 U.S. 520, 526–34 (1998), that lands conveyed by the Alaska Native Claims Settlement Act of 1971, Public Law 92–203, 85 Stat. 688 (codified, as amended, at 43 U.S.C. 1601–1629h), do not constitute ''Indian country.'' Therefore, section 1304 will have no effect on the criminal jurisdiction of most Indian tribes in Alaska.

[16] Public Law 102–137, sec. 1, 105 Stat. 646 (1991) (permanent legislation) (codified at 25 U.S.C. 1301(2)); *see* Public Law 101–511, tit. VIII, sec. 8077(b), 104 Stat. 1892 (1990) (temporary legislation) (same).

[17] 541 U.S. 193 (2004).

Subsection (d)(1)–(4) lists four sets of federal rights. The first set of defendants' rights, in paragraph (1), incorporates all rights under ICRA, 25 U.S.C. 1301–1304, that apply to a defendant in a criminal proceeding. This list of rights is substantively very similar (but not identical) to the set of criminal defendants' rights that are protected by the United States Constitution's Bill of Rights and have been incorporated into the Fourteenth Amendment's Due Process Clause and thus made fully applicable to the states. For example, ICRA prohibits tribes from compelling any person in any criminal case to be a witness against himself (akin to the United States Constitution's Fifth Amendment) [18] and from denying to any person in a criminal proceeding the right to a speedy and public trial (akin to the Sixth Amendment).[19] ICRA also prohibits a tribe from denying to any person within its jurisdiction the equal protection of its laws or depriving any person of liberty or property without due process of law.[20] Because federal law has required all tribes to protect these rights since Congress enacted ICRA in 1968, this list of rights should be familiar to tribal officials.

Furthermore, as amended by VAWA 2013, ICRA now requires a tribe that has ordered the detention of any person to timely notify him of his rights and privileges to petition a federal district court for a writ of habeas corpus and, where appropriate, to petition the federal court to stay further detention and release him from custody pending review of the habeas petition.[21]

Paragraph (2) of 25 U.S.C. 1304(d) requires a participating tribe exercising SDVCJ to provide defendants ''all rights described in [25 U.S.C. 1302(c)]'' in any criminal proceeding in which ''a term of imprisonment of any length may be imposed.'' The Tribal Law and Order Act of 2010 (TLOA),[22] amended ICRA to add the five rights described in section 1302(c): (1) The right to effective assistance of counsel at least equal to that guaranteed by the United States Constitution; (2) the right of an indigent defendant to the assistance of a licensed defense attorney, at the expense of the tribal government; (3) the right to a criminal proceeding presided over by a judge who is licensed to practice law and has sufficient legal training; (4) the right to have access, prior to being charged, to the tribe's criminal laws, rules of evidence, and rules of criminal procedure; and (5) the right to a record of the criminal proceeding, including an audio or other recording of the trial proceeding.

Under TLOA's amendments to ICRA, codified in section 1302(c), these five rights must be provided to a defendant in any criminal proceeding in which the tribe imposes on the defendant a total term of imprisonment of more than one year. Therefore, these five rights are sometimes known as the ''TLOA felony sentencing'' requirements. In 25 U.S.C. 1304(d)(2), however, these same five rights must be provided to a defendant in any SDVCJ criminal proceeding in which the tribe imposes, or may impose, a term of imprisonment of any length. So indigent defense counsel, for example, is required in any SDVCJ misdemeanor case in which imprisonment may be imposed.

Paragraph (3) of 25 U.S.C. 1304(d) guarantees the right to a trial by an impartial jury that is drawn from sources that reflect a fair cross-section of the community and do not systematically exclude any distinctive group in the community, including non-Indians. Tribes exercising SDVCJ therefore will have to determine who qualifies as part of the relevant community and how lists of those persons may be obtained and regularly updated. The law does not require that every jury in every case reflect a fair cross-section of the community. Rather, the jury pool, or venire, from which the jury is drawn must be representative of the community. Some communities in Indian country contain sizeable non-Indian populations. Other communities in Indian country have few, if any, non-Indian members, and therefore inevitably will have few, if any, non-Indians in their jury pools. Under existing tribal laws, some tribes' jury pools already include non-Indians, while others do not.

Paragraph (4) of 25 U.S.C. 1304(d) is a ''constitutional catch-all'' provision. Although it is likely of little or no direct relevance to the Pilot Project, it has the potential to cause confusion and therefore merits further discussion here. The three prior paragraphs of 25 U.S.C. 1304(d) encompass all the rights that the 113th Congress concluded must be protected in order for Congress, acting within the constraints that the United States Constitution imposes on its authority, to recognize and affirm the participating tribes' inherent power to exercise SDVCJ over non-Indian defendants. The 113th Congress recognized, however, that the understanding of which rights are fundamental to our justice system can evolve over time. Therefore, Congress included paragraph (4), which requires a participating tribe to provide defendants in SDVCJ proceedings ''all other rights whose protection is necessary under the Constitution of the United States in order for Congress to recognize and affirm the inherent power of the participating tribe to exercise [SDVCJ] over the defendant.''

This provision does not require tribal courts to protect all federal constitutional rights that federal courts are required to protect (for example, the Fifth Amendment's grand-jury indictment requirement, which state courts are also not required to protect). Rather, paragraph (4) gives courts the flexibility to expand the list of protected rights to include a currently unforeseen right whose protection the 113th Congress did not believe was essential to the exercise of SDVCJ. In the two-year period of the Pilot Project, however, it seems unlikely that courts will hold that any such unforeseen right falls within the scope of paragraph (4).

Section 908, Effective Dates, and the Pilot Project

VAWA 2013's section 908 sets the effective dates for the three key subsections of 25 U.S.C. 1304—subsections (b), (c), and (d)—as well as establishing the Pilot Project. Section 908(b)(1) provides that those three subsections generally shall take effect on the date that is two years after the date of VAWA 2013's enactment, or March 7, 2015. So tribes generally cannot exercise SDVCJ until at least March 7, 2015. After March 7, 2015, any tribe that determines it meets the statutory requirements for exercising SDVCJ may do so. Approval from the Department of Justice will not be necessary.

An exception to the 2015 starting date, however, is set forth in section 908(b)(2), which establishes a Pilot Project that authorizes the Attorney General, in the exercise of his discretion, to grant a tribe's request to be designated as a participating tribe on an accelerated basis and commence exercising SDVCJ earlier. Section 908(b)(2) states in full:

(2) Pilot project.—

(A) In general.—At any time during the 2-year period beginning on the date of enactment of this Act [March 7, 2013], an Indian tribe may ask the Attorney General to designate the tribe as a participating tribe under section 204(a) of Public Law 90–284 [to be codified at 25 U.S.C. 1304(a)] on an accelerated basis.

(B) Procedure.—The Attorney General may grant a request under subparagraph (A) after coordinating with the Secretary of the Interior, consulting with affected Indian

[18] 25 U.S.C. 1302(a)(4).

[19] *Id.* 1302(a)(6).

[20] *Id.* 1302(a)(8).

[21] *Id.* 1304(e).

[22] Public Law 111–211, tit. II, sec. 234(a)(3), 124 Stat. 2258, 2280.

tribes, and concluding that the criminal justice system of the requesting tribe has adequate safeguards in place to protect defendants' rights, consistent with section 204 of Public Law 90–284 [to be codified at 25 U.S.C. 1304].

(C) Effective dates for pilot projects.—An Indian tribe designated as a participating tribe under this paragraph may commence exercising special domestic violence criminal jurisdiction pursuant to subsections (b) through (d) of section 204 of Public Law 90–284 [to be codified at 25 U.S.C. 1304(b)–(d)] on a date established by the Attorney General, after consultation with that Indian tribe, but in no event later than the date that is 2 years after the date of enactment of this Act [March 7, 2015].

2. The Pilot Project

Given that the Pilot Project will directly and substantially affect Indian tribes in the next two years, the Department of Justice has engaged in expedited but extensive consultation with tribal officials on how best to design the Pilot Project. The procedures proposed here reflect valuable input received from tribal officials during consultation.

The Pilot Project's Structure and Two Phases

Congress provided a structure for the VAWA Pilot Project that is atypical. A conventional pilot or demonstration program lasts for several years and culminates with a report evaluating the program's success or failure and recommending that the program either be made nationwide and permanent or be discontinued. By contrast, here Congress has already determined that the key feature of the Pilot Project—tribes exercising SDVCJ—will spread nationwide just two years after VAWA 2013's enactment. So the question raised by this Pilot Project is not whether to expand the exercise of SDVCJ, but rather how best to exercise SDVCJ. Thus, tribal leaders emphasized during consultation that one of the Pilot Project's most important functions will be to support tribes in their efforts to collaboratively develop ''best practices'' that other (non-Pilot Project) tribes can use to implement SDVCJ in 2015 and beyond.

Tribal officials and employees repeatedly highlighted the usefulness of exchanging ideas with their counterparts in other tribes, peer to peer. They recognized that the Department of Justice, in coordination with the Department of the Interior, can play a key role in facilitating that intertribal collaboration and exchange of ideas. That may well turn out to be a singular lasting legacy of this Pilot Project. Indeed, tribal officials pointed to the example of the Tribal Self-Governance Demonstration Project, which began in the late 1980s with fewer than a dozen tribes but has now expanded to include hundreds of tribes that are actively managing their own programs.[23]

Consistent with and informed by the views expressed by tribal leaders during consultation, the Department of Justice therefore is proposing a VAWA Pilot Project process with two phases: A planning and self-assessment phase that commences with the publication of this notice, and an implementation phase that will commence with the publication of a final notice, which the Department anticipates will occur later this year. In Phase One, in the summer and fall of 2013, tribes that preliminarily express interest in the Pilot Project may engage in ongoing consultation with the Departments of Justice and the Interior to address any questions or concerns. These tribes will also be strongly encouraged to join the Intertribal Technical-Assistance Working Group on Special Domestic Violence Criminal Jurisdiction (ITWG). Members of the ITWG will exchange views, information, and advice about how tribes can best exercise SDVCJ, combat domestic violence, recognize victims' rights and safety needs, and fully protect defendants' rights.

This peer-to-peer technical assistance may cover a broad set of issues, from drafting stronger domestic violence codes and victim-centered protocols and policies, to improving public defender systems, to analyzing detention and correctional options for non-Indians, to designing more broadly representative jury pools. The objective will be to develop not a single, one-size-fits-all ''best practice'' for each of these issues, but rather multiple ''best practices'' that can be tailored to each tribe's particular needs, preferences, and traditions.

Tribes participating in the ITWG will also have an opportunity to engage with the Departments of Justice and the Interior, which will provide technical advice to the working group as a whole and work with individual tribes to address specific issues or concerns as needed. The Department of Justice will support the ITWG with training and technical assistance to the extent possible with available resources. Indeed, in section 1304(h), Congress expressly authorized funding ''to provide training [and] technical assistance'' to tribes' criminal justice systems.

Phase Two of the Pilot Project process, the implementation phase, will commence with the Justice Department's publication in the **Federal Register** of a final notice specifying how tribes can certify that they meet the statutory requirements to exercise SDVCJ on an accelerated basis. Some tribes will then request designation as a participating tribe under 25 U.S.C. 1304 on an accelerated basis, and the Department will timely evaluate the requests based on the statutory criteria, after the required consultation with affected tribes and coordination with the Department of the Interior. The tribes whose requests are granted may commence prosecuting non-Indian perpetrators of domestic violence on a date established by the Department of Justice after further consultation with the tribe. The Department anticipates that Phase Two likely will commence in late 2013 and continue through March 7, 2015, with some tribes potentially prosecuting SDVCJ cases by late 2013 or early 2014.

During consultation, tribal officials uniformly encouraged the Department to develop a mechanism for tribes to ''self-certify'' that they meet the statutory requirements to exercise SDVCJ. As a result, each requesting tribe will be expected to fill out an Application Questionnaire that will ask the tribe to identify provisions of the tribe's criminal code, rules of procedure, and written policies, as well as actual practices, that qualify the tribe to exercise SDVCJ on an accelerated basis. Each requesting tribe will be asked to attach the relevant portions of its laws, rules, and policies to the completed Application Questionnaire. These materials, collected from the various tribes applying to participate in Phase Two of the Pilot Project, will serve as a great resource for the much larger number of tribes that may elect to commence exercising SDVCJ in March 2015 or later.

This two-phased Pilot Project will benefit tribes in several ways. First, the tribes that successfully apply in the Pilot Project's second phase will have the opportunity to commence exercising SDVCJ, and thus enhance public safety in their communities, sooner than would otherwise be possible. And these tribes will establish an early, strong track record for effectively and fairly prosecuting all offenders who perpetrate crimes of domestic violence in Indian country, regardless of their Indian or non-Indian status. Second, the other tribes that preliminarily express interest in the Pilot Project and opt to join the ITWG will have the opportunity to shape best practices that will strengthen criminal justice systems on many reservations, including their own, and

[23] *See* Public Law 100–472, sec. 209, 102 Stat. 2285, 2296–98 (1988).

thus will be better prepared to exercise SDVCJ after March 2015. And third, the tribes that do not participate in either phase of the Pilot Project will have the opportunity to learn from the experiences of the first two sets of tribes and to benefit from the body of tribal laws and practices that those tribes will have developed and implemented.

Phase One: Ongoing Consultation, Preliminary Expressions of Interest, and the Intertribal Technical-Assistance Working Group

If a tribe's elected leadership believes that the tribe might be a strong candidate for participation in both phases of the Pilot Project, and thus for exercising SDVCJ prior to 2015, the tribe may submit a ''preliminary expression of interest.'' A preliminary expression of interest should take the form of a short letter from the tribe's leader or governing body to Mr. Tracy Toulou, Director, Office of Tribal Justice, Department of Justice, 950 Pennsylvania Avenue NW., Room 2310, Washington, DC 20530, email *OTJ@usdoj.gov.* The preliminary expression of interest should be submitted as soon as possible and in any event no later than July 15, 2013.

A tribe that submits a preliminary expression of interest during Phase One will not be obligated during Phase Two to submit a request for designation as a participating tribe if the tribe decides to wait until after March 7, 2015, to commence exercising SDVCJ. Conversely, a tribe that wishes during Phase Two to submit a request for designation as a participating tribe (so that it can commence exercising SDVCJ before March 2015) need not have submitted a preliminary expression of interest during Phase One. However, submitting a preliminary expression of interest as early as possible will greatly facilitate the Justice Department's efforts to provide timely information to the tribe, to address issues of unique concern to the tribe, and to identify, in coordination with tribal officials, those areas where the tribe may benefit from technical assistance.

The letter preliminarily expressing interest also should identify the name and title of any person the tribe authorizes as its representative to the ITWG, if the tribe chooses to participate in the ITWG. This person should be a tribal officer, employee, or contractor who has been designated by the tribe's elected officers to act on their behalf and serve on the ITWG. The authorized representative could be, for example, a tribal leader, trial judge, appellate judge, attorney, prosecutor, public defender, victim advocate, victim service provider, police chief, criminal justice consultant, or court administrator. The tribe's authorized representative should have the time, energy, and technical expertise to meaningfully participate in the ITWG. The Department of Justice anticipates that participation in the ITWG may demand a substantial time commitment, at least in 2013.

A tribe may choose to authorize more than one person to participate in the ITWG. For example, a tribe may want both a judge and a victim advocate, or both a prosecutor and a public defender, to contribute to the ITWG's discussions. But each tribe should designate one authorized representative who can serve as the main point of contact for the Justice Department and for other tribes.

The Department of Justice may ask particular federal employees (from the Departments of Justice and the Interior and perhaps other agencies) and non-federal experts (including persons affiliated with national or regional intertribal organizations) to provide support to the ITWG. And the Department will support the ITWG with training and technical assistance.

It is anticipated that the ITWG members will meet in person or by telephone, video conference, or interactive Webinar technology at least twice a month for the duration of Phase One of the Pilot Project. If funding is available, the Department may support travel expenses for ITWG members to attend in-person meetings. Members also will meet, perhaps less frequently, during Phase Two, to continue identifying, documenting, and disseminating best practices that can be replicated by other tribes, and to help collect data and assess the Pilot Project tribes' efforts to exercise SDVCJ, combat domestic violence, recognize victims' rights and safety needs, and fully protect defendants' rights.

After receiving timely preliminary expressions of interest from the tribes, the Department of Justice will help convene and facilitate the initial ITWG meeting. Although it is anticipated that federal employees ordinarily will be invited to participate in subsequent ITWG meetings as observers or subject-matter experts who can provide technical assistance, the tribal representatives may choose sometimes to meet without any federal employees present. In addition, tribal members of the ITWG may informally exchange written drafts of tribal criminal code provisions, tribal rules of procedure, tribal policies, and other tribal best practices, with or without sharing these drafts with the federal employees. Tribal members of the ITWG also may opt to meet in smaller groups, arranged either by region or by subject-matter expertise.

The ITWG may choose to discuss anything that its members deem relevant to the proper implementation of sections 904 and 908 of VAWA 2013. The Department of Justice has appended to this notice a list of substantive questions that may provide a useful starting point in identifying key issues and developing a checklist of best practices for exercising SDVCJ. Some of the questions focus on statutory requirements. Others touch on broader issues that are potentially relevant to tribal best practices but clearly are not required by VAWA 2013 or any other federal law.

The principal goal of the ITWG will be to provide a forum for peer-to-peer learning as tribes assess their own criminal justice systems and prepare to exercise SDVCJ. Secondary goals of the ITWG will be to create a network of peer mentors, identify an array of different model codes and rules, and document best practices, all of which can assist other tribes as they prepare to exercise SDVCJ in the future.

Consistent with the views expressed during consultation, the ITWG has been designed to maximize the collaborative sharing of information among tribal governments. At the same time, the Department of Justice recognizes the importance of the government-to-government relationship that exists between the United States and each individual Indian tribe. During (or after) Phase One, any tribe may also engage in one-on-one discussions with the Department of Justice or the Department of the Interior on any issue that may arise that is unique to that tribal government. Such discussions may involve specific requests for additional training or technical assistance if funding is available.

Phase Two: Tribal Requests and the Application Questionnaire

In Phase Two of the Pilot Project, tribes may request designation as participating tribes that may commence exercising SDVCJ on an accelerated basis. It is important to note that the statute does not set the number of tribes that can participate in the Pilot Project and exercise SDVCJ on an accelerated basis, though it does limit the Pilot Project to just two years, effectively ending in March 2015. After that time, any tribe that determines it meets the statutory requirements and wishes to exercise SDVCJ may do so without the involvement of the Department of Justice.

During the course of the Pilot Project, however, section 908(b)(2)(B) of the

statute authorizes the Department of Justice to grant a request only after concluding that the requesting tribe's criminal justice system ''has adequate safeguards in place to protect defendants' rights, consistent with [25 U.S.C. 1304].'' Tellingly, Congress did not restrict the Department's purview to the rights of defendants specified in subsection 1304(d), but rather demanded consistency with all subsections of section 1304. The statute thus requires the Department to consider how the tribe plans to comply with the entirety of section 1304, focusing (though not exclusively) on the specific defendants' rights enumerated in subsection 1304(d).

The Attorney General is required to exercise his discretion in the Pilot Project process, as the statute states that he ''may'' (not ''shall'') grant a qualifying tribe's request. In exercising his discretion, the Attorney General will be bound by the text of section 1304 and guided by the section's broader purposes: to decrease domestic violence in Indian country, to strengthen the capacity of Indian tribes to exercise their inherent sovereign power to administer justice and control crime, and to ensure that perpetrators of domestic violence are held accountable for their criminal behavior.

To address the overwhelming preference for a self-certification process that tribal leaders and experts expressed during consultation, and to facilitate moving quickly during the Pilot Project's two-year window while fulfilling the Attorney General's statutory duty, the Department will ask each requesting tribe to provide certified answers to a list of detailed questions. These questions may touch on matters such as the tribe's criminal justice system, its ongoing efforts to combat domestic violence and provide victim services and support, its history of ICRA compliance, and the various safeguards that the tribe has put in place to protect defendants' rights. The precise substance and form of the Application Questionnaire have not yet been determined. It will be appended to the final notice that the Department of Justice publishes in the **Federal Register** several months from now, and it will be informed by comments that the public submits in response to this notice and by lessons learned through the ITWG process.

However, some broad outlines are clear. The Application Questionnaire will need to be completed and certified as accurate by the tribe's chief executive, judicial, and legal officers. To provide an adequate basis for the Justice Department to make the determination demanded by the statute, the questions will need to be comprehensive and detailed. The bulk of the questions likely could be answered with a single sentence or a simple ''yes'' or ''no,'' supplemented with applicable excerpts from the tribe's laws, rules, or policies. This way, the questionnaire will put as little burden as possible on tribal officials and employees, while addressing the Department's need for sufficiently detailed information to perform its statutory responsibility. The Application Questionnaire also may help a tribe assess its own criminal justice system's readiness for the exercise of SDVCJ.

The completed, certified Application Questionnaire will serve as the tribe's formal request to be designated as a participating tribe that can exercise SDVCJ on an accelerated basis under the Pilot Project. The Department will give priority consideration to requests that it receives during the first 30 days after publication in the **Federal Register** of the final notice (not this notice). But the Department will consider all requests received before March 7, 2015. And although the Department strongly encourages tribes that may submit a formal request in Phase Two to join the ITWG during Phase One, the Department will consider Phase Two requests from both ITWG members and nonmembers.

Phase Two: The Federal Response to Tribal Requests

Once the Department of Justice has received a requesting tribe's completed, certified Application Questionnaire, including attached excerpts of tribal laws, rules, and policies, the Department proposes to take the following steps.

First, the requesting tribe's entire application will be shared with relevant components of the Department of Justice, including any U.S. Attorney's Office with jurisdiction over the tribe's Indian country, and relevant components of the Department of the Interior, including the Office of the Assistant Secretary of the Interior–Indian Affairs; the Office of the Solicitor of the Interior; and the Bureau of Indian Affairs' Office of Justice Services (BIA–OJS).

Second, the Justice Department will post a notice on its Tribal Justice and Safety Web site indicating that the tribe has submitted a request in Phase Two of the Pilot Project. This notice will announce a telephonic consultation for officials of federally recognized Indian tribes who wish to comment on the request, as well as a deadline for submitting written comments. As required by VAWA 2013's section 908(b)(2)(B), the Justice Department will consult with elected and duly appointed officials of affected tribes, consistent with applicable Executive Orders and Presidential Memoranda on tribal consultation.

Third, generally working through the requesting tribe's authorized point of contact (POC), as identified in the tribe's Application Questionnaire, the Justice Department may make follow-up inquiries about the tribe's criminal justice system. But the specificity of the questions in the Application Questionnaire should minimize the need for extensive follow-up inquiries.

Fourth, personnel from the Departments of Justice and the Interior will coordinate in reviewing the requesting tribe's application. They also may consider information obtained in other contexts, including grant applications, such as the tribe's prior Coordinated Tribal Assistance Solicitation (CTAS) applications, and any tribal-court review that BIA–OJS has conducted under 25 U.S.C. 3612.

Fifth, Justice Department personnel will make a recommendation to the Associate Attorney General about whether the requesting tribe should be designated as a participating tribe under 25 U.S.C. 1304 on an accelerated basis. This recommendation will turn on whether the requesting tribe's criminal justice system has adequate safeguards in place to protect defendants' rights, consistent with all subsections of 25 U.S.C. 1304.

Sixth, if the recommendation is negative, the Justice Department's Office of Tribal Justice (OTJ) will so inform the tribe's POC. If funding is available, the Department may provide appropriate technical assistance to a tribe that wishes to prepare and submit a revised request. The Department may also offer specific training and technical assistance to address particular needs through its grant-making components, the Office of Justice Programs (OJP), the Office on Violence Against Women (OVW), and the Office of Community-Oriented Policing Services (COPS), and may work with the ITWG to identify other tribal or intertribal resources that may assist the tribe.

Seventh, if the recommendation is positive, the Department of Justice will consult with the requesting tribe to establish a date on which the tribe may commence exercising SDVCJ. The commencement date may be conditioned on the tribe receiving certain additional training or technical assistance or taking certain steps, such as notifying the public when the tribe will start exercising SDVCJ.

Eighth, if the Department of Justice and the tribe can reach agreement on a starting date and conditions (if any), the Associate Attorney General, exercising discretion delegated by the Attorney General, may designate the tribe as a participating tribe under 25 U.S.C. 1304 on an accelerated basis. The Department will publish notice of the designation on the Department's Tribal Justice and Safety Web site and in the **Federal Register**.

3. Statutory and Executive Order Reviews

General Disclaimers

This notice is not intended to, and does not, create any right or benefit, substantive or procedural, enforceable at law or in equity by any party in any matter, civil or criminal, against the United States, its departments, agencies, or entities, its officers, employees, or agents, or any other person, nor does this notice place any limitations on otherwise lawful litigative prerogatives of the U.S. Department of Justice.

Furthermore, nothing in this notice shall be construed to (1) Encroach upon or diminish in any way the inherent sovereign authority of each tribe over its own government, legal system, law enforcement, and personnel matters; (2) imply that any tribal justice system is an instrumentality of the United States; or (3) alter the trust responsibility of the United States to Indian tribes.

Administrative Procedure Act

This notice concerns interpretive rules, general statements of policy, or rules of agency organization, procedure, or practice for purposes of the Administrative Procedure Act, and therefore notice and comment are not required under 5 U.S.C. 553(b)(A). Nonetheless, the Department of Justice is publishing this notice in the **Federal Register** and on the Department's Tribal Justice and Safety Web site for public comment, as well as to solicit preliminary expressions of interest in the Pilot Project.

Executive Order 13175—Consultation and Coordination With Indian Tribal Governments

This notice fully comports with Executive Order 13175 of November 6, 2000. Although it creates no new substantive rights and imposes no binding legal requirements, the notice has tribal implications because it will have substantial direct effects on Indian tribes and their relationships with the Federal Government. The Department therefore has engaged in meaningful, though speedy, consultation and collaboration with elected and duly appointed tribal officials in developing this notice.

More specifically, the Department of Justice organized and led two telephonic consultations with tribal leaders on how best to structure and implement the voluntary Pilot Project established under sections 904 and 908 of VAWA 2013. To facilitate the consultation and frame the discussion with tribal governments, in mid-April the Department circulated a six-page framing paper that presented background on the new law and raised a series of questions on specific issues relating to the Pilot Project.[24] The first consultation was held on May 14, 2013, and the second on May 17, 2013. The Department also consulted members and representatives of the Attorney General's Tribal Nations Leadership Council on April 30, 2013.

On April 12, 2013, the Department participated in a hearing of the Indian Law and Order Commission on implementation of VAWA 2013 and the Pilot Project, held in conjunction with the Federal Bar Association's 38th Annual Indian Law Conference in New Mexico. In addition, the Department held a series of informal consultations with tribal stakeholders, including calls with tribal judges and court personnel (on May 8, 2013); tribal prosecutors (May 13); tribal public defenders (May 2); federal public defenders (May 6); tribal in-house counsel (May 9); tribal victim advocates and victim service providers (May 1); and professors of Indian law (May 10). Finally, the Department received written comments from more than a dozen American Indian and Alaska Native tribes, members of the public, and intertribal organizations, including the National Congress of American Indians (NCAI), the National American Indian Court Judges Association (NAICJA), the National Association of Indian Legal Services (NAILS), and the Tribal Law and Policy Institute (TLPI).

During these consultations, some tribal officials expressed a desire to expedite the Pilot Project process, while other tribal officials asked the Department of Justice to engage in further tribal consultation before proceeding. Generally, there was a consensus that the main value of the Pilot Project will lie in (1) Collaboration and information-sharing among the Pilot Project tribes; (2) flexible interaction between tribes and criminal justice experts at the Department of Justice and elsewhere; and (3) collecting the various tribal laws and procedures developed by the Pilot Project tribes that exercise SDVCJ on an accelerated basis and ''sharing that information forward'' with tribes that may implement VAWA 2013 and exercise SDVCJ after the Pilot Project is completed.

There also was a strong consensus in favor of tribal ''self-certification''—that is, a process in which the requesting tribe provides brief written answers to detailed questions about its criminal justice system; the tribe's leader, attorney, and chief judge each certify the completeness and accuracy of the answers; and Justice Department personnel then rely principally on those answers and thus need to engage in only limited follow-up inquiries, rather than undertake extensive investigation and site visits. At the same time, tribal officials recognized that the Department of Justice has a responsibility to exercise due diligence in assessing tribes' capacities and therefore must at times review extrinsic evidence of tribes' compliance with the new federal law's requirements, including tribal constitutional provisions, tribal code provisions, tribal court rules, tribal administrative orders, tribal written policies, and tribal written procedures, as well as summaries of the qualifications of certain tribal staff.

The Department of Justice believes that the key concerns that tribal officials highlighted at the tribal consultations in April and May 2013 have been addressed in this notice. The two-phased structure is designed to move forward quickly with implementation, yet allow adequate time for deliberation and consultation. The proposed Phase One of the Pilot Project addresses the consensus about intertribal collaboration and information-sharing. Proposed Phase Two addresses the consensus about tribal self-certification, while also providing for necessary, targeted follow-up inquiries by the Department of Justice.

Executive Orders 12866 and 13563—Regulatory Planning and Review

Because this notice is not a ''significant regulatory action'' under Executive Order 12866 of September 30, 1993 (''Regulatory Planning and Review''), as amended, it is not subject to review under Executive Order 12866 or 13563.

Executive Order 13132—Federalism

This notice will not have substantial direct effects on the states, on the relationship between the national government and the states, or on the

[24] U.S. Department of Justice, *Implementation of Sections 904 and 908 of the Violence Against Women Reauthorization Act of 2013* (Apr. 16, 2013).

distribution of power and responsibilities among the various levels of government. Under 25 U.S.C. 1304(b)(2)–(3), a participating tribe may exercise SDVCJ only concurrently with the jurisdiction of the United States, of a state, or of both. The new law does not alter federal or state criminal jurisdiction. Therefore, in accordance with Executive Order 13132 of August 4, 1999, this notice does not have sufficient federalism implications to warrant the preparation of a federalism assessment.

Executive Order 12988—Civil Justice Reform

This notice meets the applicable standards set forth in section 3(a) and (b)(2) of Executive Order 12988 of February 5, 1996.

Regulatory Flexibility Act

Because this notice is not required to be published as a proposed rule under 5 U.S.C. 553, it need not be reviewed under the Regulatory Flexibility Act, 5 U.S.C. 603(a). In any event, this notice will not have a significant economic impact on a substantial number of small entities; thus, no regulatory flexibility analysis is required for that reason as well. *Id.* 605(b).

Unfunded Mandates Reform Act of 1995

This notice will not result in the expenditure by state, local, and tribal governments, in the aggregate, or by the private sector, of $100 million or more in any one year, and it will not significantly or uniquely affect small governments. Moreover, becoming a participating tribe and exercising SDVCJ—whether as part of the Pilot Project between now and March 2015, or at any time after March 2015—are entirely voluntary. Therefore, no actions were deemed necessary under the provisions of the Unfunded Mandates Reform Act of 1995, Public Law 104–4.

Small Business Regulatory Enforcement Fairness Act of 1996

Because this notice does not include a rule, it need not be reviewed under section 251 of the Small Business Regulatory Enforcement Fairness Act of 1996, 5 U.S.C. 804. In any event, this notice will not result in an annual effect on the economy of $100 million or more; a major increase in costs or prices; or significant adverse effects on competition, employment, investment, productivity, innovation, or the ability of United States-based enterprises to compete with foreign-based enterprises in domestic and export markets. *See id.*

Dated: June 10, 2013.

Eric H. Holder, Jr.,

Attorney General.

Appendix

Substantive Questions for Consideration by Interested Tribes and by the Intertribal Technical-Assistance Working Group on Special Domestic Violence Criminal Jurisdiction

The following is a preliminary list of questions that tribes interested in the Pilot Project might find useful as a starting point in identifying key issues and developing a checklist of best practices for exercising special domestic violence criminal jurisdiction (SDVCJ) on an accelerated basis.

Some of the questions on this list focus on statutory requirements that Congress included in the Violence Against Women Reauthorization Act of 2013 (VAWA 2013). Other questions touch on broader topics, such as those covered in the authorized grants to tribal governments in 25 U.S.C. 1304(f), that are potentially relevant to tribal ''best practices'' but clearly are not required by VAWA 2013 or any other federal law.

Many of these questions were raised during tribal consultation. The Department of Justice anticipates that they may be further discussed by members of the Intertribal Technical-Assistance Working Group on Special Domestic Violence Criminal Jurisdiction (ITWG) in collaboratively developing tribal best practices.

Some—but certainly not all—of these questions touch on issues that the Department of Justice anticipates addressing in the Application Questionnaire, which will serve as a tribe's formal request to commence exercising SDVCJ on an accelerated basis during Phase Two of the Pilot Project. The Application Questionnaire will be appended to the final notice that the Department of Justice expects to publish in the **Federal Register**, probably in late 2013.

Some of the questions in this Appendix may be answered by reference to unwritten tribal practices. But most of these questions deal with features of a tribal criminal justice system that would likely be memorialized in the tribe's constitution, criminal code, rules of evidence, rules of criminal procedure, rules of appellate procedure, or written policies. Therefore, for each of these questions, interested tribes might consider whether amendments to their laws, rules, or policies are needed.

The Right to Trial by an Impartial Jury

Statutory Background: Section 1304(d)(3) provides that, ''[i]n a criminal proceeding in which a participating tribe exercises [SDVCJ], the participating tribe shall provide to the defendant . . . the right to a trial by an impartial jury that is drawn from sources that—(A) reflect a fair cross section of the community; and (B) do not systematically exclude any distinctive group in the community, including non-Indians.''

Section 1304(f)(3) authorizes grants to tribal governments ''to ensure that, in criminal proceedings in which a participating tribe exercises [SDVCJ], jurors are summoned, selected, and instructed in a manner consistent with all applicable requirements.'' Congress has not yet appropriated funds for any grant authorized by section 1304.

Geographic Scope of the Community: For purposes of determining the composition of the jury pool for SDVCJ cases, how will the tribe define the geographic scope of the ''community''? Is the ''community'' coextensive with the tribe's Indian country? Is the existence or geographic scope of the tribe's Indian country in dispute?

Membership in the Community: To be deemed a member of the relevant ''community,'' must a person reside within the community's geographic scope? Does the community include persons who reside outside, but are employed within, the community's geographic scope? Does the community include all employees of the tribe, its agencies, and its business entities?

Lists of Prospective Jurors: How will the tribe obtain and maintain an accurate, updated list of adult community members, including nonmember Indians and non-Indians, who are potentially eligible to be jurors in SDVCJ cases? In compiling the tribe's official list of prospective jurors, what lists will the tribe use (e.g., state or local lists of registered voters or actual voters, tribal lists of registered voters or actual voters, state or tribal lists of licensed drivers, lists provided by various tribal agencies such as the tribal housing or taxing authority)? How often will those lists be updated and merged, to form the tribe's official list of prospective jurors? Will the tribe maintain one official list of prospective jurors for SDVCJ cases and a separate official list of prospective jurors for cases with Indian defendants, or will the tribe maintain one official list of prospective jurors for all cases? Are non-Indians (and nonmember Indians) already included in the tribe's jury pools?

Inclusiveness of the List: Approximately how many adults are members of the community? Approximately how many persons are on the tribe's official list of prospective jurors for SDVCJ cases?

Representativeness of the List: Approximately what percentage of adult community members (the population eligible to serve as jurors in SDVCJ cases) do tribal members, nonmember Indians, and non-Indians represent? For comparison, approximately what percentage of the tribe's official list of prospective jurors for SDVCJ cases do tribal members, nonmember Indians, and non-Indians represent? Will the tribe collect demographic data by questionnaire from all persons reporting for jury duty in SDVCJ cases (whether they are selected as a trial juror or not)? Is there a significant disparity between the percentage of the venire (i.e., the persons reporting for jury duty) that is non-Indian and the percentage of adult community members that is non-Indian?

Failure of Prospective Jurors to Appear: Given that the tribe lacks general criminal jurisdiction over non-Indians in the community, how will the tribe encourage non-Indians to fulfill their obligation to serve as jurors when summoned for SDVCJ cases?

Randomness of Jury Selection: What are the qualifications for eligibility for jury

service (e.g., minimum age, maximum age, length of residence/membership in the community, lack of a felony conviction or pending felony charges, U.S. citizenship, ability to communicate in English or another language, etc.)? When, if ever, can prospective jurors be removed based on challenges for cause or peremptory challenges? Are there any other respects in which the selection of jurors is non-random?

Jury Verdicts: Will the tribe require unanimous guilty verdicts in SDVCJ cases?

Waiver: Under tribal law, what are the standards and procedures for determining whether a defendant is competent and has, by guilty plea or otherwise, knowingly and intelligently waived his right to have the case tried by a jury?

ICRA's Jury Right and VAWA's Impartial-Jury Right: Under section 1304(d)(3), as enacted in VAWA 2013, a participating tribe must provide the defendant in an SDVCJ case an absolute right to a jury trial, regardless of whether the offense is punishable by imprisonment, and regardless of whether the person accused requests a jury trial. Under section 1302(a)(10), as enacted in the Indian Civil Rights Act of 1968 (ICRA), tribes cannot ''deny to any person accused of an offense punishable by imprisonment the right, upon request, to a trial by jury of not less than six persons.'' Because section 1304(d)(3) does not so qualify the right to a trial by an impartial jury, the right to a trial by an impartial jury in an SDVCJ case applies even if the defendant does not expressly request a jury trial and even if the offense is not punishable by imprisonment. Are the tribe's laws consistent with these federal statutory rights?

The Rights Described in the Tribal Law and Order Act of 2010

Statutory Background: Section 1304(d)(2) provides that, ''[i]n a criminal proceeding in which a participating tribe exercises [SDVCJ], the participating tribe shall provide to the defendant . . . [,] if a term of imprisonment of any length may be imposed, all rights described in section 202(c) [of ICRA].''

As amended by the Tribal Law and Order Act of 2010 (TLOA), ICRA's section 202(c), codified at 25 U.S.C. 1302(c), describes five rights, all of which will apply in SDVCJ cases in which imprisonment may be imposed:

In a criminal proceeding . . ., the Indian tribe shall—

(1) provide to the defendant the right to effective assistance of counsel at least equal to that guaranteed by the United States Constitution; and

(2) at the expense of the tribal government, provide an indigent defendant the assistance of a defense attorney licensed to practice law by any jurisdiction in the United States that applies appropriate professional licensing standards and effectively ensures the competence and professional responsibility of its licensed attorneys;

(3) require that the judge presiding over the criminal proceeding—

(A) has sufficient legal training to preside over criminal proceedings; and

(B) is licensed to practice law by any jurisdiction in the United States;

(4) prior to charging the defendant, make publicly available the criminal laws (including regulations and interpretative documents), rules of evidence, and rules of criminal procedure (including rules governing the recusal of judges in appropriate circumstances) of the tribal government; and

(5) maintain a record of the criminal proceeding, including an audio or other recording of the trial proceeding.

25 U.S.C. 1302(c).

Section 1304(f)(2) authorizes grants to tribal governments ''to provide indigent criminal defendants with the effective assistance of licensed defense counsel, at no cost to the defendant, in criminal proceedings in which a participating tribe prosecutes a crime of domestic violence or dating violence or a criminal violation of a protection order.'' This provision expressly refers to all such criminal proceedings and is not limited to SDVCJ cases with non-Indian defendants.

Section 1304(f)(1) authorizes grants to tribal governments, among other things, ''to strengthen tribal criminal justice systems to assist Indian tribes in exercising [SDVCJ], including . . . prosecution; . . . trial and appellate courts; . . . [and] criminal codes and rules of criminal procedure, appellate procedure, and evidence.''

General Questions on the TLOA Rights

Felony Sentencing Under TLOA: With TLOA's enactment, the rights described in 25 U.S.C. 1302(c) must be protected in all criminal cases in which a tribe ''imposes a total term of imprisonment of more than 1 year on a defendant.'' Since TLOA was enacted on July 29, 2010, have the tribe's courts sentenced any criminal defendant to a total term of imprisonment of more than one year? If not, does the tribe have plans to commence exercising this enhanced sentencing authority under TLOA?

Cases in Which Imprisonment ''May Be Imposed'': Under tribal law, in what circumstances, if any, may a criminal defendant who was sentenced only to pay a criminal fine and not to serve a term of imprisonment be imprisoned for failure to pay the fine?

Defense Attorneys

Effective Assistance of Licensed Defense Attorneys: In criminal proceedings in which the tribe will exercise SDVCJ and terms of imprisonment of any length are or may be imposed, how will the tribe protect defendants' right to effective assistance of counsel at least equal to that guaranteed by the United States Constitution? In such criminal proceedings, how will the tribe provide to indigent defendants, at the expense of the tribal government, the assistance of defense attorneys licensed to practice law by any jurisdiction in the United States that applies appropriate professional licensing standards and effectively ensures the competence and professional responsibility of its licensed attorneys? Will indigent Indian defendants be afforded the same rights as indigent non-Indian defendants, at least in cases involving crimes of domestic violence or dating violence or criminal violations of protection orders?

Qualifications of Licensed Defense Attorneys: In answering the following questions, it may be helpful to focus on each individual attorney who the tribal government pays to assist indigent defendants in criminal proceedings in the tribe's courts. Where is the attorney licensed to practice law (including state and tribal jurisdictions)? Would the attorney be qualified to continue representing an indigent defendant in federal district court by filing a petition for a writ of habeas corpus under 25 U.S.C. 1303? Are the tribe's appointed defense attorneys provided with and required to attend continuing legal education? Overall, how do the appointed defense attorneys' licenses to practice law and qualifications to represent clients in tribal and federal courts compare to those of the tribe's prosecutors?

Tribal Licenses to Practice Law: If the tribe licenses attorneys to practice law, what professional licensing standards (including educational requirements) does the tribe apply? How does the tribe effectively ensure the competence and professional responsibility of its licensed attorneys?

Independence of Defense Attorneys: What measures does the tribe take to ensure that appointed defense attorneys are free from political and financial influence and can exercise independent professional judgment?

Caseload: If the tribe hires full-time public defenders, how many cases do they carry per year, on average?

Criminal Defense Support: Do the tribe's appointed defense attorneys have meaningful access to investigative and expert services?

Indigency: In cases in which indigent defendants have a right to appointed counsel, does the tribe provide free criminal defense services to all defendants, to all defendants who request counsel, or to all defendants who request counsel and demonstrate that they are financially unable to obtain adequate representation without substantial hardship? If a defendant must demonstrate eligibility, what are the tribe's standards for making this determination?

When the Right Attaches: In cases in which the tribe provides appointed counsel, how soon after arrest, detention, or request for counsel are defense attorneys assigned and made available to the defendant? Under tribal law, does a defendant's right to appointed counsel extend to cases in the tribe's appellate courts?

Waiver: Under tribal law, what are the standards and procedures for determining whether a defendant is competent and has knowingly and intelligently waived his right to counsel?

Tribal Judges

Licensed, Legally Trained Judges: In criminal proceedings in which the tribe will exercise SDVCJ and terms of imprisonment of any length are or may be imposed, how will the tribe ensure that the judges presiding over the criminal proceedings (pretrial, at trial, and on appeal) have sufficient legal training to preside over criminal proceedings and are licensed to practice law by any jurisdiction in the United States?

Qualifications of Licensed Judges: In answering the following questions, it may be helpful to focus on each individual judge who presides over criminal proceedings in

the tribe's courts. Where is the judge licensed to practice law (including state and tribal jurisdictions)? What legal training to preside over criminal proceedings has the judge received? How many years of experience does the judge have in practicing law and in serving on the bench? How do the judges' licenses, legal training, and experience compare to those of the state or local judges who preside over similar criminal proceedings in cases arising in or near the tribe's Indian country?

Legal Training for Judges: Does the tribe have any law, rule, or policy defining what constitutes sufficient legal training to preside over criminal proceedings? Are the judges who preside over the tribe's criminal proceedings provided with and required to attend continuing legal education?

Tribal Laws and Rules

Public Access to Tribal Laws and Rules: How will the tribe provide to the defendants and their licensed defense attorneys, prior to charging the defendant, the right to review, along with other members of the public, the criminal laws (including regulations and interpretative documents), rules of evidence, and rules of criminal procedure (including rules governing the recusal of judges in appropriate circumstances) of the tribal government? How and where can a member of the public access these laws and rules? Is there any fee or charge for reviewing these laws or rules? Are they freely available on the Internet?

Scope of the Publicly Available Laws and Rules: What types of regulations, if any, constitute part of the tribe's criminal laws? What types of interpretative documents, if any, constitute part of the tribe's criminal laws? Do these documents include judicial opinions? Are the tribe's rules of appellate procedure accessible in the same manner as the rules of evidence and criminal procedure?

Judicial Standards: Does the tribe have written rules or codes for judicial performance and conduct, including rules governing the recusal of tribal judges in appropriate circumstances?

Tribal Court Records

Records of Criminal Proceedings: How will the tribe maintain and provide to defendants in SDVCJ cases a record of criminal proceedings, including an audio or other recording of the trial proceedings? What form do these records or recordings take (e.g., a court reporter's transcript, an audio recording, a video recording, etc.)? Does the tribe waive any fee for obtaining these records or recordings if the defendant is indigent?

Habeas Corpus Rights

Statutory Background: Section 1304(d)(1) provides that, ''[i]n a criminal proceeding in which a participating tribe exercises [SDVCJ], the participating tribe shall provide to the defendant . . . all applicable rights under this Act.'' The term ''this Act'' refers to ICRA, 25 U.S.C. 1301–1304, as amended, including by TLOA in 2010 and by VAWA 2013.

Section 1304(e)(3) provides that ''[a]n Indian tribe that has ordered the detention of any person has a duty to timely notify such person of his rights and privileges under [subsection 1304(e)] and under section [1303].'' Section 1303 provides that ''[t]he privilege of the writ of habeas corpus shall be available to any person, in a court of the United States, to test the legality of his detention by order of an Indian tribe.'' Section 1304(e)(1) provides that ''[a] person who has filed a petition for a writ of habeas corpus in a court of the United States under section [1303] may petition that court to stay further detention of that person by the participating tribe''—that is, to be released from the tribe's custody. Section 1304(e)(2) provides the criteria for granting such a stay.

The Tribe's ICRA Compliance: If in recent years (for example, in the last decade) any person detained by order of the tribe has prevailed in a federal habeas case against the tribe under 25 U.S.C. 1303, or any federal or tribal court has found that the tribe violated a criminal defendant's rights, has the tribe adopted (or is it planning to implement) changes or new procedures to avoid such issues in the future? More generally, if challenged by a habeas petitioner, how can the tribe document a track record of complying with the rights described in ICRA's section 1302?

Timely Notice of Habeas Rights: When and how does the tribe timely notify each person whose detention it has ordered of his rights and privileges under both 25 U.S.C. 1303 and 25 U.S.C. 1304(e)?

Other Rights Protected by the Indian Civil Rights Act of 1968

Statutory Background: Section 1304(d)(1) provides that, ''[i]n a criminal proceeding in which a participating tribe exercises [SDVCJ], the participating tribe shall provide to the defendant . . . all applicable rights under this Act [25 U.S.C. 1301–1304].''

Section 1302(a) provides the following rights, some of which may have few, if any, applications in SDVCJ cases:

No Indian tribe in exercising powers of self-government shall—

(1) make or enforce any law prohibiting the free exercise of religion, or abridging the freedom of speech, or of the press, or the right of the people peaceably to assemble and to petition for a redress of grievances;

(2) violate the right of the people to be secure in their persons, houses, papers, and effects against unreasonable search and seizures, nor issue warrants, but upon probable cause, supported by oath or affirmation, and particularly describing the place to be searched and the person or thing to be seized;

(3) subject any person for the same offense to be twice put in jeopardy;

(4) compel any person in any criminal case to be a witness against himself;

(5) take any private property for a public use without just compensation;

(6) deny to any person in a criminal proceeding the right to a speedy and public trial, to be informed of the nature and cause of the accusation, to be confronted with the witnesses against him, to have compulsory process for obtaining witnesses in his favor, and at his own expense to have the assistance of counsel for his defense . . . ;

(7)(A) require excessive bail, impose excessive fines, or inflict cruel and unusual punishments;

* * * * *

(8) deny to any person within its jurisdiction the equal protection of its laws or deprive any person of liberty or property without due process of law;

(9) pass any bill of attainder or ex post facto law; or

(10) deny to any person accused of an offense punishable by imprisonment the right, upon request, to a trial by jury of not less than six persons.

25 U.S.C. 1302(a).

Tribal Self-Assessment for Each Applicable Right: For each of the individual rights described in paragraphs (1) through (10) of section 1302(a) that might apply in an SDVCJ case, how do the tribe's laws, rules, policies, and practices protect a criminal defendant's rights? The answers may reflect not only the tribe's written laws, rules, and policies, but also the actual, on-the-ground practices in the tribe's criminal justice system. This self-assessment includes section 1302(a)(8), which prohibits a tribe from denying to any person ''the equal protection of its laws'' or depriving any person of ''liberty or property without due process of law.''

Custodial Interrogation: Prior to custodial interrogation, does the tribe advise the suspect that he has the right to remain silent, that any statement he makes may be used against him in court, and that he has the right to obtain counsel and, if indigent, to have counsel appointed for him?

Criminal Discovery: Does the tribe allow criminal defendants to discover the evidence against them? Does the tribe require prosecutors to disclose exculpatory evidence to criminal defendants?

Language Access: Does the tribe protect the defendant's right to have the free assistance of an interpreter if he cannot understand or speak the language used in court?

Juvenile Defendants: Will the tribe exercise SDVCJ over any person who was less than 18 years of age at the time of the offense? If so, in what respects, if any, will the tribe treat the juvenile defendant differently from an adult defendant?

Appeals: Does the tribe provide every person convicted of a tribal crime the right to appeal the conviction, the sentence, or both to a tribal or intertribal appellate court composed of judges who have sufficient legal training, were not involved in the trial proceedings, and do not serve as legislative or executive officers of the tribe? Under tribal law, can the prosecution appeal a jury's not-guilty verdict?

Equal Protection of the Tribe's Laws: How will the tribe guarantee the equal protection of its laws to Indian defendants who are not subject to SDVCJ? Will Indian defendants have the same rights as similarly situated non-Indian defendants, and vice versa?

Tribal Remedies for Violations of Defendants' Rights: Under tribal law, if a tribal court finds that the rights of a criminal defendant were violated, what remedies are available to the court?

Tribal Criminal Code Provisions Specifically for SDVCJ Cases

Statutory Background: Section 1304(b)(4)(A)(i) provides that ''[a] participating tribe may not exercise [SDVCJ] over an alleged offense if neither the defendant nor the alleged victim is an Indian.'' That is simply a restatement of the long-standing case law providing exclusive state (rather than tribal) jurisdiction over most Indian-country crimes involving only non-Indians. ICRA's section 1301(4) defines an Indian as ''any person who would be subject to the jurisdiction of the United States as an Indian under [18 U.S.C. 1153] if that person were to commit an offense listed in that section in Indian country to which that section applies.''

Section 1304(b)(4)(B) provides that ''[a] participating tribe may exercise [SDVCJ] over a defendant only if the defendant . . . resides in the Indian country of the participating tribe; . . . is employed in the Indian country of the participating tribe; or . . . is a spouse, intimate partner, or dating partner of . . . a member of the participating tribe . . . [or] an Indian who resides in the Indian country of the participating tribe.'' This provision ensures that a non-Indian defendant has sufficient ties to the prosecuting tribe.

Victim and Defendant Are Both Non-Indian: Will the tribe's criminal code require prosecutors in cases with non-Indian defendants to allege and then prove beyond a reasonable doubt that the victim is Indian? Are special jury instructions needed?

Defendant's Ties to the Indian Tribe: Will the tribe's criminal code require prosecutors in SDVCJ cases to allege and then prove beyond a reasonable doubt that the defendant resides in the tribe's Indian country; is employed in the tribe's Indian country; or is a spouse, intimate partner, or dating partner either of an Indian who resides in the tribe's Indian country or of a member of the tribe? Are special jury instructions needed?

Concurrent Criminal Jurisdiction

Statutory Background: Section 1304(b)(2) provides that ''[t]he exercise of [SDVCJ] by a participating tribe shall be concurrent with the jurisdiction of the United States, of a State, or of both.'' And section 1304(b)(3) provides that ''[n]othing in . . . section [1304] . . . creates or eliminates any Federal or State criminal jurisdiction over Indian country; or . . . affects the authority of the United States[,] or any State government that has been delegated authority by the United States[,] to investigate and prosecute a criminal violation in Indian country.''

Tribal Coordination with Federal (or State) Prosecutors: Has the tribe developed formal or informal policies with the relevant U.S. Attorney's Office or Offices (or, where the state has concurrent jurisdiction, the relevant state or local prosecutor) for coordination, abstention, or deferral in cases in which more than one government seeks to investigate or prosecute the same defendant for substantially the same act or acts? Are any prosecutors for the tribe currently serving as Special Assistant United States Attorneys (SAUSAs) under 25 U.S.C. 2810(d) or 28 U.S.C. 543(a)?

The Tribe's Laws on Domestic Violence and Dating Violence

Statutory Background: Section 1304(c) provides that ''[a] participating tribe may exercise [SDVCJ] over a defendant for criminal conduct that falls into one or more of the following categories. . . .'' The first category, described in section 1304(c)(1), is ''[a]n act of domestic violence or dating violence that occurs in the Indian country of the participating tribe.''

Section 1304(a)(2) defines the term ''domestic violence'' as ''violence committed by a current or former spouse or intimate partner of the victim, by a person with whom the victim shares a child in common, by a person who is cohabiting with or has cohabited with the victim as a spouse or intimate partner, or by a person similarly situated to a spouse of the victim under the domestic- or family-violence laws of an Indian tribe that has jurisdiction over the Indian country where the violence occurs.'' Under section 1304(a)(7), which in turn incorporates 18 U.S.C. 2266(7), the term ''spouse or intimate partner'' includes ''a spouse or former spouse of the abuser, a person who shares a child in common with the abuser, and a person who cohabits or has cohabited as a spouse with the abuser; or . . . a person who is or has been in a social relationship of a romantic or intimate nature with the abuser, as determined by the length of the relationship, the type of relationship, and the frequency of interaction between the persons involved in the relationship; and . . . any other person similarly situated to a spouse who is protected by the domestic or family violence laws of the State or tribal jurisdiction in which the injury occurred or where the victim resides.''

Section 1304(a)(1) defines the term ''dating violence'' as ''violence committed by a person who is or has been in a social relationship of a romantic or intimate nature with the victim, as determined by the length of the relationship, the type of relationship, and the frequency of interaction between the persons involved in the relationship.''

Specialized Court or Docket: Does the tribe have a specialized domestic violence and dating violence court, or a specialized domestic violence and dating violence docket?

The Tribe's Criminal Code and SDVCJ Cases: Does the tribe's criminal code establish offenses for acts of domestic violence and dating violence that fall squarely within the category of criminal conduct covered by section 1304(c)(1)? Or will these acts be prosecuted under a general assault statute in which the relationship between the defendant and the victim is not an element of the offense?

Arresting Perpetrators: Do the tribe's laws or policies encourage or mandate arrests of domestic violence and dating violence offenders based on probable cause that an offense has been committed? Do the tribe's laws or policies authorize warrantless arrests of domestic violence and dating violence offenders based on probable cause that a misdemeanor has been committed? Do the tribe's laws, policies, or practices discourage dual arrests of offender and victim?

The Tribe's Laws on Protection Orders

Statutory Background: Section 1304(c) provides that ''[a] participating tribe may exercise [SDVCJ] over a defendant for criminal conduct that falls into one or more of the following categories. . .'' The second category, described in section 1304(c)(2), is ''[a]n act that—(A) occurs in the Indian country of the participating tribe; and (B) violates the portion of a protection order that . . . prohibits or provides protection against violent or threatening acts or harassment against, sexual violence against, contact or communication with, or physical proximity to, another person; . . . was issued against the defendant; . . . is enforceable by the participating tribe; and . . . is consistent with [18 U.S.C. 2265(b)].''

Section 1304(a)(5) defines a ''protection order'' to mean ''any injunction, restraining order, or other order issued by a civil or criminal court for the purpose of preventing violent or threatening acts or harassment against, sexual violence against, contact or communication with, or physical proximity to, another person,'' including ''any temporary or final order issued by a civil or criminal court, whether obtained by filing an independent action or as a pendent[e] lite order in another proceeding, if the civil or criminal order was issued in response to a complaint, petition, or motion filed by or on behalf of a person seeking protection.''

A protection order issued by a state, tribal, or territorial court is consistent with 18 U.S.C. 2265(b) if ''such court has jurisdiction over the parties and matter under the law of such State, Indian tribe, or territory; and . . . reasonable notice and opportunity to be heard is given to the person against whom the order is sought sufficient to protect that person's right to due process. In the case of ex parte orders, notice and opportunity to be heard must be provided within the time required by State, tribal, or territorial law, and in any event within a reasonable time after the order is issued, sufficient to protect the respondent's due process rights.''

As amended by VAWA 2013's section 905, 18 U.S.C. 2265(e) now provides that a tribal court ''shall have full civil jurisdiction to issue and enforce protection orders involving any person, including the authority to enforce any orders through civil contempt proceedings, to exclude violators from Indian land, and to use other appropriate mechanisms, in matters arising anywhere in the Indian country of the Indian tribe (as defined in [18 U.S.C.] 1151) or otherwise within the authority of the Indian tribe.''

The Tribe's Criminal Code and SDVCJ Cases: Does the tribe's criminal code establish offenses for protection-order violations that fall squarely within the category of criminal conduct covered by section 1304(c)(2)?

Tribal-Court Issuance of Protection Orders: Do the tribe's laws or rules authorize the tribe's courts to issue protection orders, as defined in section 1304(a)(5), involving any person, Indian or non-Indian, in matters arising anywhere in the tribe's Indian country or otherwise within the tribe's authority?

Mutual Restraining Orders: Do the tribe's laws, policies, or practices prohibit issuance

of mutual restraining orders of protection except in cases in which both parties file a claim and the court makes detailed findings of fact indicating that both parties acted primarily as aggressors and that neither party acted primarily in self-defense?

Tribal Registry: Do the tribe's courts maintain a registry of the protection orders they issue?

Tribal-Court Enforcement of Protection Orders: Do the tribe's courts enforce protection orders, as defined in section 1304(a)(5), involving any person, Indian or non-Indian, in matters arising anywhere in the tribe's Indian country or otherwise within the tribe's authority? What mechanisms do the tribe's courts use to enforce protection orders? Do the tribe's laws or policies encourage or mandate arrest of domestic violence offenders who violate the terms of a valid and outstanding protection order?

Cross-Jurisdiction Recognition of Protection Orders: Do the tribe's courts recognize and enforce protection orders issued by the courts of the state or states in which the tribe's Indian country is located, and vice versa?

Internet Publication: Do the tribe's laws or policies prevent publication on the Internet of the registration or filing of a protection order if such publication would reveal the identity of the party protected by the order?

Tribal Protection of Victims' Rights

Statutory Background: Section 1304(f)(1)(G) authorizes grants to tribal governments, among other things, ''to strengthen tribal criminal justice systems to assist Indian tribes in exercising [SDVCJ], including . . . culturally appropriate services and assistance for victims and their families.'' Section 1304(f)(4) authorizes grants to tribal governments ''to accord victims of domestic violence, dating violence, and violations of protection orders rights that are similar to the rights of a crime victim described in [18 U.S.C. 3771(a)], consistent with tribal law and custom.''

Eight rights of crime victims are described in 18 U.S.C. 3771(a), a federal statute that does not directly apply to or impose obligations on tribes or tribal courts:

(1) The right to be reasonably protected from the accused.

(2) The right to reasonable, accurate, and timely notice of any public court proceeding, or any parole proceeding, involving the crime or of any release or escape of the accused.

(3) The right not to be excluded from any such public court proceeding, unless the court, after receiving clear and convincing evidence, determines that testimony by the victim would be materially altered if the victim heard other testimony at that proceeding.

(4) The right to be reasonably heard at any public proceeding in the district court involving release, plea, sentencing, or any parole proceeding.

(5) The reasonable right to confer with the attorney for the Government in the case.

(6) The right to full and timely restitution as provided in law.

(7) The right to proceedings free from unreasonable delay.

(8) The right to be treated with fairness and with respect for the victim's dignity and privacy.

18 U.S.C. 3771(a).

Crime Victims' Rights Under Tribal Law: How do the tribe's laws, rules, policies, and practices protect the rights of victims of domestic violence and dating violence, consistent with tribal law and custom, while providing victim services and assistance in a manner appropriate to the tribe's culture?

Availability of Victim Services and Assistance: Do the tribe's laws or policies make services and assistance available to victims of domestic violence or dating violence, regardless of the victim's decision to report the crime to law enforcement or cooperate in any law enforcement investigation and regardless of the victim's relationship to the alleged perpetrator?

Safety Planning: Do the tribe's laws or policies encourage safety planning with victims of domestic violence or dating violence who report crimes or seek services?

Victim Notification: Does the tribe operate its own victim notification system? Does the tribe participate in the victim notification system of each state in which the tribe's Indian country is located?

Confidential Victim Information: Do the tribe's laws or policies prevent domestic violence service provider programs from sharing confidential victim information with outside organizations or individuals without the victim's documented consent?

Juvenile Victims: Are there any special provisions in the tribe's laws, rules, or policies that would apply in an SDVCJ case because the victim is less than 18 years of age?

Detention, Corrections, Probation, and Parole

Statutory Background: Section 1304(f)(1)(D)–(F) authorizes grants to tribal governments, among other things, ''to strengthen tribal criminal justice systems to assist Indian tribes in exercising [SDVCJ], including . . . probation systems; . . . detention and correctional facilities; . . . [and] alternative rehabilitation centers.''

Non-Indian Inmates: Does any federal, state, local, or tribal statutory, regulatory, or contractual provision prohibit the tribe from housing non-Indians accused or convicted of tribal criminal offenses in the same jails and prisons in which the tribe houses Indians accused or convicted of tribal criminal offenses?

Where Tribal Sentences Are Served: Does the tribe have a tribal correctional center appropriate for both short- and long-term incarceration? Does the tribe have an alternative rehabilitation center? Does the tribe have an agreement with a state or local government to house prisoners in a state or local government-approved detention or correctional center that is appropriate for both short- and long-term incarceration?

Alternative Punishments: Does the tribe sentence defendants in domestic violence or dating violence cases to serve alternative forms of punishment, as determined by a tribal judge under tribal law, or consistent with tribal custom or traditional tribal dispute resolution?

Batterer-Intervention Programs: Does the tribe have a court-ordered and court-monitored batterer intervention program (BIP) to hold batterers accountable for their behavior without incarcerating them? Do the tribe's courts hold accountable the batterers who fail to complete such court-ordered BIPs?

Probation or Parole and Reentry: Does the tribe have or provide access to a reentry program for defendants who have been incarcerated?

Crime Information Databases

Statutory Background: Section 1304(f)(1)(A) authorizes grants to tribal governments, among other things, ''to strengthen tribal criminal justice systems to assist Indian tribes in exercising [SDVCJ], including . . . law enforcement (including the capacity of law enforcement or court personnel to enter information into and obtain information from national crime information databases).''

Tribal Databases: Do the tribe's law enforcement or court personnel maintain a criminal justice information repository, such as a database of convicted persons?

State Databases: Do the tribe's court personnel enter protection orders into the state protection-order database for the state or states in which the tribe's Indian country is located?

CJIS Databases: Do the tribe's court personnel (1) enter protection orders into the FBI Criminal Justice Information Services (CJIS) National Crime Information Center (NCIC) Protection Order File; and (2) enter data (e.g., orders committing a person to a mental institution) into CJIS's National Instant Criminal Background Check System (NICS) Index? Do the tribe's law enforcement personnel, court personnel, or both (1) obtain criminal history information from CJIS databases; (2) enter court disposition data into CJIS databases; (3) enter arrest warrants into CJIS's NCIC Wanted Person File; (4) enter information about sex offenders into the CJIS's NCIC/National Sex Offender Registry (NSOR); and (5) take fingerprints from arrestees and submit fingerprint data to CJIS's Integrated Automated Fingerprint Identification System (IAFIS)?

UCR Data: Do the tribe's law enforcement personnel submit Uniform Crime Reporting (UCR) data? If so, is the UCR data submitted directly to FBI CJIS, through the Bureau of Indian Affairs' Office of Justice Services (BIA–OJS), through the state, or through some other route?

Commencing to Exercise SDVCJ

Statutory Background: In authorizing funding for these purposes, section 1304(h) recognizes the potential need ''to provide training, technical assistance, data collection, and evaluation of the criminal justice systems of participating tribes.'' VAWA 2013's section 908(b)(2)(C) provides that the date on which a participating tribe may commence exercising SDVCJ under the Pilot Project must be ''established by the Attorney General, after consultation with that Indian tribe.''

Training and Technical Assistance: What additional training or technical assistance, if

any, is needed by the tribe's officers, employees, or contractors before commencing the exercise of SDVCJ?

Data Collection and Assessment: For the duration of the Pilot Project period (i.e., until March 7, 2015), would the tribe be willing to actively participate in the ITWG and collect and analyze data on the tribe's SDVCJ cases (and any resulting federal habeas cases)?

[FR Doc. 2013–14158 Filed 6–13–13; 8:45 am]

BILLING CODE 4410–A5–P

DEPARTMENT OF LABOR

Mine Safety and Health Administration

Proposed Information Collection; Comment Request; Coal Mine Rescue Teams; Arrangements for Emergency Medical Assistance and Transportation for Injured Persons; Agreements; Reporting Requirements; Posting Requirements

AGENCY: Mine Safety and Health Administration, Labor.

ACTION: 60-Day Notice.

SUMMARY: The Department of Labor, as part of its continuing effort to reduce paperwork and respondent burden, conducts a pre-clearance consultation program to provide the general public and Federal agencies with an opportunity to comment on proposed and continuing collections of information in accordance with the Paperwork Reduction Act of 1995, 42 U.S.C. 3506(c)(2)(A). This program helps to assure that requested data can be provided in the desired format, reporting burden (time and financial resources) is minimized, collection instruments are clearly understood, and the impact of collection requirements on respondents can be properly assessed. Currently, the Mine Safety and Health Administration is soliciting comments concerning the extension of the information collection related to 30 CFR Sections 49.12, 49.13, 49.16, 49.17, 49.18, 49.19, 49.50, 75.1713–1 and 77.1702.

DATES: All comments must be postmarked or received by midnight Eastern Standard Time on August 13, 2013.

ADDRESSES: Comments concerning the information collection requirements of this notice must be clearly identified with ''OMB 1219–0144'' and sent to the Mine Safety and Health Administration (MSHA). Comments may be sent by any of the methods listed below.

- *Federal E-Rulemaking Portal: http://www.regulations.gov.* Follow the on-line instructions for submitting comments for docket number [MSHA–2013–0016].
- *Regular Mail or Hand Delivery:* MSHA, Office of Standards, Regulations, and Variances, 1100 Wilson Boulevard, 21st floor, Room 2350, Arlington, VA 22209–3939.

FOR FURTHER INFORMATION CONTACT: Sheila McConnell, Deputy Director, Office of Standards, Regulations, and Variances, MSHA, at *McConnell.Sheila.A@dol.gov* (email); 202–693–9440 (voice); or 202–693–9441 (facsimile).

SUPPLEMENTARY INFORMATION:

I. Background

Section 103(h) of the Federal Mine Safety and Health Act of 1977 (Mine Act), 30 U.S.C. 813, authorizes MSHA to collect information necessary to carry out its duty in protecting the safety and health of miners.

30 CFR Part 49, Mine Rescue Teams, Subpart B—Mine Rescue Teams for Underground Coal Mines, sets standards related to the availability of mine rescue teams; alternate mine rescue capability for small and remote mines; inspection and maintenance records of mine rescue equipment and apparatus; physical requirements for mine rescue team members and alternates; and experience and training requirements for team members and alternates. This package covers the following requirements for coal mines.

Section 49.12 requires each operator of an underground coal mine to send the District Manager a statement describing the mine's method of compliance with this standard.

Section 49.13 provides that operators of small and remote mines may submit an application for alternative mine rescue capability to MSHA for approval.

Section 49.16 requires that a person trained in the use and care of a breathing apparatus must inspect and test the apparatus at intervals not exceeding 30 days and must certify by signature and date that the required inspections and tests were done, and record any corrective action taken.

Section 49.17 requires that each member of a mine rescue team be examined annually by a physician who must certify that each person is physically fit to perform mine rescue and recovery work.

Section 49.18 requires that a record of the training received by each mine rescue team member be made and kept on file at the mine rescue station for a period of one year. The operator must provide the District Manager information concerning the schedule of upcoming training when requested.

Section 49.19 requires that each mine have a mine rescue notification plan outlining the procedures to be followed in notifying the mine rescue teams when there is an emergency that requires their services.

Section 49.50 requires underground coal mine operators to certify that each designated coal mine rescue team meets the requirements of 30 CFR part 49 subpart B.

Sections 75.1713–1 and 77.1702 require operators to make arrangements for 24-hour emergency medical assistance and transportation for injured persons and to post this information at appropriate places at the mine, including the names, titles, addresses, and telephone numbers of all persons or services currently available under those arrangements.

II. Desired Focus of Comments

The Mine Safety and Health Administration (MSHA) is soliciting comments concerning the proposed extension of the information collection related to Coal Mine Rescue Teams; Arrangements for Emergency Medical Assistance and Transportation for Injured Persons; Agreements; Reporting Requirements; Posting Requirements. MSHA is particularly interested in comments that:

- Evaluate whether the collection of information is necessary for the proper performance of the functions of the agency, including whether the information has practical utility;
- Evaluate the accuracy of the MSHA's estimate of the burden of the collection of information, including the validity of the methodology and assumptions used;
- Suggest methods to enhance the quality, utility, and clarity of the information to be collected; and
- Minimize the burden of the collection of information on those who are to respond, including through the use of appropriate automated, electronic, mechanical, or other technological collection techniques or other forms of information technology, e.g., permitting electronic submission of responses.

OMB clearance requests are available on MSHA's Web site at *http://www.msha.gov* under ''**Federal Register** Documents'' on the right side of the screen by selecting ''New and Existing Information Collections and Supporting Statements''. The document will be available on MSHA's Web site for 60 days after the publication date of this notice, and on regulations.gov. Comments submitted in writing or in electronic form will be made available for public inspection on regulations.gov.

Because comments will not be edited to remove any identifying information, MSHA cautions the commenter against including any information in the submission that should not be publicly disclosed.

The public also may examine publicly available documents at MSHA, Office of Standards, Regulations, and Variances, 1100 Wilson Boulevard, Room 2350, Arlington, VA 22209–3939.

Questions about the information collection requirements may be directed to the person listed in the **FOR FURTHER INFORMATION CONTACT** section of this notice.

III. Current Actions

The information obtained from applicants will be used to determine compliance with MSHA's safety and health standards.

MSHA has updated the number of respondents and responses, as well as the total burden hours and burden costs supporting this information collection request.

MSHA does not intend to publish the results from this information collection and is not seeking approval to either display or not display the expiration date for the OMB approval of this information collection.

There are no certification exceptions identified with this information collection and the collection of this information does not employ statistical methods.

Type of Review: Extension without change of a currently approved collection.

Agency: Mine Safety and Health Administration.

Title: Coal Mine Rescue Teams; Arrangements for Emergency Medical Assistance and Transportation for Injured Persons; Agreements; Reporting Requirements; Posting Requirements.

OMB Number: 1219–0144.

Affected Public: Business or other for-profit.

Total Number of Respondents: 477.

Frequency: Various.

Total Number of Responses: 21,379.

Total Burden Hours: 3,345 hours.

Total Annual Respondent or Recordkeeper Cost: $786,928.

Comments submitted in response to this notice will be summarized and included in the request for Office of Management and Budget approval of the information collection request; they will also become a matter of public record.

Dated: June 10, 2013.

George F. Triebsch,

Certifying Officer.

[FR Doc. 2013–14107 Filed 6–13–13; 8:45 am]

BILLING CODE 4510–43–P

DEPARTMENT OF LABOR

Mine Safety and Health Administration

Proposed Information Collection; Comment Request; Safety Standards for Underground Coal Mine Ventilation—Belt Entry Used as an Intake Air Course To Ventilate Working Sections and Areas Where Mechanized Mining Equipment Is Being Installed or Removed

AGENCY: Mine Safety and Health Administration, Labor.

ACTION: 60-Day Notice.

SUMMARY: The Department of Labor, as part of its continuing effort to reduce paperwork and respondent burden, conducts a pre-clearance consultation program to provide the general public and Federal agencies with an opportunity to comment on proposed and continuing collections of information in accordance with the Paperwork Reduction Act of 1995, 44 U.S.C. 3506(c)(2)(A). This program helps to assure that requested data can be provided in the desired format, reporting burden (time and financial resources) is minimized, collection instruments are clearly understood, and the impact of collection requirements on respondents can be properly assessed. Currently, the Mine Safety and Health Administration (MSHA) is soliciting comments concerning the extension of information collections related to the provisions of 30 CFR 75.350, 75.351, 75.352 and 75.371.

DATES: All comments must be postmarked or received by midnight Eastern Standard Time on August 13, 2013.

ADDRESSES: Comments concerning the information collection requirements of this notice must be clearly identified with ''OMB 1219–0138'' and sent to the Mine Safety and Health Administration (MSHA). Comments may be sent by any of the methods listed below.

- *Federal E-Rulemaking Portal: http://www.regulations.gov.* Follow the on-line instructions for submitting comments for docket number [MSHA–2013–0138].
- *Regular Mail or Hand Delivery:* MSHA, Office of Standards, Regulations, and Variances, 1100 Wilson Boulevard, 21st Floor, Room 2350, Arlington, VA 22209–3939.

FOR FURTHER INFORMATION CONTACT: Sheila McConnell, Deputy Director, Office of Standards, Regulations, and Variances, MSHA, at *McConnell.Sheila.A@dol.gov* (email); 202–693–9440 (voice); or 202–693–9441 (facsimile).

SUPPLEMENTARY INFORMATION:

I. Background

Under MSHA standards, MSHA allows operators to use air from a belt air course to ventilate a working section, or an area where mechanized mining equipment is being installed or removed, only under certain conditions. The belt air use must be evaluated and approved by the district manager in the mine ventilation plan and operators must follow a number of other requirements that provide additional protection.

Section 75.350(b) requires that the mine operator must include in a ventilation plan a justification that the use of air from a belt entry would afford at least the same measure of protection as where belt haulage entries are not used. The plan also must include information regarding point feeds and regulators and designated areas for dust and air velocity measurements.

Sections 75.351(b)(3) and 75.351(b)(4) require a mine operator to post a map or schematic, at a designated surface location, which shows the locations and type of Atmospheric Monitoring System (AMS) sensors at each location and the intended air flow direction at these locations. This map or schematic must be updated within 24 hours of any change in this information. Contact information for AMS and other appropriate personnel also must be posted at this location.

Section 75.351(j) requires approval of the CO ambient levels, and the means to determine those levels, in the mine ventilation plan.

Section 75.351(m) permits a mine to incorporate time delays into the AMS, or to use other methods for reducing non-fire alerts and alarm levels, provided they are specified and approved in the mine ventilation plan. Permission for such time delays, or other methods of reducing non-fire alerts and alarms, would be granted based on associated documentation that justifies these changes.

Sections 75.351(n)(2) and 75.351(n)(3) require that alarms for AMS be tested every seven days and CO, smoke, or methane sensors be calibrated, every 31 days, respectively.

Section 75.351(o)(1)(i) requires that a record be made if the AMS emits an alert or alarm signal. The record would consist of the date, time, location, and type of sensor, and the reason for its activation.

Section 75.351(o)(1)(ii) requires that, if an AMS malfunctions, a record be made of the date, the extent and cause of the malfunction, and the corrective

action taken to return the system to proper operating condition.

Section 75.351(o)(1)(iii) requires that the persons doing the weekly test of alert and alarm signals, the monthly calibration, or maintenance of the system make a record of these tests, calibrations, or maintenance.

Section 75.351(o)(3) requires that all records concerning the AMS be kept in a book or electronically in a computer system that is secure and not susceptible to alteration.

Section 75.351(p) requires the mine operator to keep these records for at least one year at a surface location and to make them available for inspection by authorized representatives of the Secretary and representatives of miners.

Section 75.351(q)(3) requires that a record of annual AMS operator training be kept. The record will include the content of training, the person conducting the training, and the date the training is conducted. The record needs to be maintained at the mine site by the mine operator for at least one year.

Sections 75.352(a), 75.352(b), and 75.352(c) require the designated AMS operator or other appropriate personnel to notify, investigate, or evacuate when malfunction, alert, or alarm signals are received.

Section 75.371(hh) requires reporting within the mine ventilation plan of the ''ambient level in parts per million of carbon monoxide, and the method for determining the ambient level, in all areas where carbon monoxide sensors are installed.'' This provision is impacted by § 75.351(j).

Section 75.371(kk) requires the locations where air quantities are measured as set forth in § 75.350(b)(6) be included in the mine ventilation plan.

Section 75.371(ll) requires the locations and use of point feed regulators, in accordance with Sections 75.350(c) and 75.350(d)(5), to be in the mine ventilation plan.

Section 75.371(mm) requires the location of any diesel-discriminating sensor and additional carbon monoxide or smoke sensors installed in the belt air course to be included in the mine ventilation plan.

Sections 75.371(nn), 75.371(oo), and 75.371(pp) require modification of the mine ventilation plan to show the length of the time delay or any other method used for reducing the number of non-fire related alert and alarm signals from CO sensors, the lower alert and alarm setting for CO sensors, and the alternate instrument and the alert and alarm levels associated with the instrument, respectively.

II. Desired Focus of Comments

MSHA is soliciting comments concerning the proposed extension of the information collection related to the Safety Standards for Underground Coal Mine Ventilation—Belt Entry Used as an Intake Air Course to Ventilate Working Sections and Areas Where Mechanized Mining Equipment is Being Installed or Removed. MSHA is particularly interested in comments that:

- Evaluate whether the collection of information is necessary for the proper performance of the functions of the agency, including whether the information has practical utility;
- Evaluate the accuracy of the MSHA's estimate of the burden of the collection of information, including the validity of the methodology and assumptions used;
- Suggest methods to enhance the quality, utility, and clarity of the information to be collected; and
- Minimize the burden of the collection of information on those who are to respond, including through the use of appropriate automated, electronic, mechanical, or other technological collection techniques or other forms of information technology, e.g., permitting electronic submission of responses.

OMB clearance requests are available on MSHA's Web site at *http://www.msha.gov* under ''Federal Register Documents'' on the right side of the screen by selecting ''New and Existing Information Collections and Supporting Statements''. The document will be available on MSHA's Web site for 60 days after the publication date of this notice, and on regulations.gov. Comments submitted in writing or in electronic form will be made available for public inspection on regulations.gov. Because comments will not be edited to remove any identifying information, MSHA cautions the commenter against including any information in the submission that should not be publicly disclosed.

The public also may examine publicly available documents at MSHA, Office of Standards, Regulations, and Variances, 1100 Wilson Boulevard, Room 2350, Arlington, VA 22209–3939.

Questions about the information collection requirements may be directed to the person listed in the **FOR FURTHER INFORMATION CONTACT** section of this notice.

III. Current Actions

The information obtained from applicants will be used to determine compliance with safety and health standards.

MSHA has updated the number of respondents and responses, as well as the total burden hours and burden costs supporting this information collection request.

MSHA does not intend to publish the results from this information collection and is not seeking approval to not display the expiration date for the OMB approval of this information collection.

There are no certification exceptions identified with this information collection and the collection of this information does not employ statistical methods.

Type of Review: Extension without change of a currently approved information collection.

Agency: Mine Safety and Health Administration.

Title: Safety Standards for Underground Coal Mine Ventilation—Belt Entry Used as an Intake Air Course to Ventilate Working Sections and Areas Where Mechanized Mining Equipment is Being Installed or Removed.

OMB Number: 1219–0138.

Affected Public: Business or other for-profit.

Total Number of Respondents: 21.

Frequency: Various.

Total Number of Responses: 251.

Total Burden Hours: 4,245 hours.

Total Annual Respondent or Recordkeeper Cost: $343,624.

Comments submitted in response to this notice will be summarized and included in the request for Office of Management and Budget approval of the information collection request; they will also become a matter of public record.

Dated: June 10, 2013.

George F. Triebsch,

Certifying Officer.

[FR Doc. 2013–14106 Filed 6–13–13; 8:45 am]

BILLING CODE 4510–43–P

DEPARTMENT OF LABOR

Mine Safety and Health Administration

Petitions for Modification of Application of Existing Mandatory Safety Standards

AGENCY: Mine Safety and Health Administration, Labor.

ACTION: Notice.

SUMMARY: Section 101(c) of the Federal Mine Safety and Health Act of 1977 and 30 CFR Part 44 govern the application, processing, and disposition of petitions for modification. This notice is a summary of petitions for modification submitted to the Mine Safety and Health Administration (MSHA) by the parties listed below to modify the application

of existing mandatory safety standards codified in Title 30 of the Code of Federal Regulations.

DATES: All comments on the petitions must be received by the Office of Standards, Regulations and Variances on or before July 15, 2013.

ADDRESSES: You may submit your comments, identified by ''docket number'' on the subject line, by any of the following methods:

1. *Electronic Mail: zzMSHA-comments@dol.gov.* Include the docket number of the petition in the subject line of the message.
2. *Facsimile:* 202–693–9441.
3. *Regular Mail or Hand Delivery:* MSHA, Office of Standards, Regulations and Variances, 1100 Wilson Boulevard, Room 2350, Arlington, Virginia 22209–3939, Attention: George F. Triebsch, Director, Office of Standards, Regulations and Variances. Persons delivering documents are required to check in at the receptionist's desk on the 21st floor. Individuals may inspect copies of the petitions and comments during normal business hours at the address listed above.

MSHA will consider only comments postmarked by the U.S. Postal Service or proof of delivery from another delivery service such as UPS or Federal Express on or before the deadline for comments.

FOR FURTHER INFORMATION CONTACT: Barbara Barron, Office of Standards, Regulations and Variances at 202–693–9447 (Voice), *barron.barbara@dol.gov* (Email), or 202–693–9441 (Facsimile). [These are not toll-free numbers.]

SUPPLEMENTARY INFORMATION:

I. Background

Section 101(c) of the Federal Mine Safety and Health Act of 1977 (Mine Act) allows the mine operator or representative of miners to file a petition to modify the application of any mandatory safety standard to a coal or other mine if the Secretary of Labor determines that:

1. An alternative method of achieving the result of such standard exists which will at all times guarantee no less than the same measure of protection afforded the miners of such mine by such standard; or
2. That the application of such standard to such mine will result in a diminution of safety to the miners in such mine.

In addition, the regulations at 30 CFR 44.10 and 44.11 establish the requirements and procedures for filing petitions for modification.

II. Petitions for Modification

Docket Number: M–2013–021–C.

Petitioner: Peabody Energy Company, 115 Grayson Lane, Eldorado, Illinois 62930.

Mine: Wildcat Hills Underground Mine, MSHA I.D. No. 11–03156, located in Saline County, Illinois.

Regulation Affected: 30 CFR 75.1909(b)(6) (Nonpermissible diesel-powered equipment; design and performance requirements).

Modification Request: The petitioner requests a modification of the existing standard to permit an alternative method of compliance with respect to the braking systems on the Getman RDG–1504S Road Builder. The petitioner proposes to operate the Road Builder, Serial Number 6760 as it was originally designed, without front brakes. The petitioner states that:

(1) The standard does not address equipment with more than four (4) wheels, specifically the Getman RDG–1504S Road Builder with six (6) wheels. This machine has dual brake systems on the four (4) rear wheels and is designed to prevent a loss of braking due to a single component failure.

(2) The speed of the machine will be limited to 10 miles per hour (mph) by permanently blocking out any gear that would provide higher speed or use transmission and differential ratios that would limit the maximum speed to 10 mph.

(3) Training will be provided for operators to recognize appropriate speeds for different road conditions and slopes.

(4) Training will be provided for operators to lower the grader blade to provide additional stopping capability.

(5) The safety of the miners will not be compromised if the machine is operated as described in paragraph #2.

(6) This RDG–1504S Road Builder has been approved under a previous petition for modification, Docket Number M–2004–047–C, when it was operated at the Arclar Willow Lake Portal Mine, MSHA I.D. No. 11–03054.

(7) The Getman Road Builder has been transferred to the Wildcat Hills Underground Mine.

The petitioner asserts that the proposed alternative method will guarantee the same measure of protection to the miners as the existing standard.

Docket Number: M–2013–022–C.

Petitioner: Paramont Coal Company Virginia, LLC, Three Gateway Center, Suite 1500, 401 Liberty Avenue, Pittsburgh, Pennsylvania 15222.

Mine: Deep Mine 41, MSHA I.D. No. 44–07223, located in Dickenson County, Virginia.

Regulation Affected: 30 CFR 75.1700 (Oil and gas wells).

Modification Request: The petitioner requests a modification of the existing standard to permit an alternative method of compliance for the standard with respect to gas wells. The petitioner proposes to plug vertically drilled gas wells in order to mine through them. The petitioner proposes to use the following alternative method when mining through vertically drilled degasification boreholes with horizontal laterals to permit mining through the boreholes:

(1) The petition will apply to all wells to be mined through located within the mineable reserve at Paramont Coal Company's Deep Mine 41.

(2) A safety barrier of 300 feet in diameter (150 between any mined area and a well) will be maintained around all wells (to include all active, inactive, abandoned, shut-in, and previously plugged oil and gas wells, and including water injection wells) until approval has been obtained from the District Manager (DM).

(3) Prior to mining within the safety barrier around any well that is intended to be mined through, the operator, will provide to the DM a certification from a company official stating that all mandatory procedures for cleaning out, preparing, and plugging each gas or oil well have been completed. The certification will be accompanied by all logs and any other records the DM may request.

The petitioner proposes to use the following procedures when cleaning out, preparing, plugging and replugging wells to the surface:

(1) The operator will pump expanding cement slurry down the well to form a plug which runs from at least 200 feet (400 feet if the total well depth is 4,000 feet or greater) below the base of the Jawbone Seam (or lower if required by the DM due to the geological strata, or due to the pressure within the well) to the surface. The expanding cement will be placed in the well under a pressure of at least 200 pounds per square inch. Portland cement or a lightweight cement mixture may be used to fill the area from 100 feet above the top of the Jawbone Seam (or higher if required by the DM due to the geological strata, or due to the pressure within the well) to the surface.

(2) A small quantity of steel turnings or other small magnetic particles will be embedded in the top of the cement near the surface to serve as a permanent magnetic monument of the well. An acceptable alternative monument can be achieved by using a 4½-inch or larger casing set in cement extending at least 36 inches above the ground level with the API well number either engraved or

welded on the casing. When the hole cannot be marked with a physical monument (e.g., such as where it is located in prime farmland), high-resolution GPS coordinates (one-half meter resolution) will be used.

The petitioner proposes to use the following procedures when plugging wells with mechanical bridge plugs or cap seal plugs:

(1) If the total depth of the well is less than 4,000 feet, a diligent effort will be made to clean the borehole to a depth that would permit the placement of a minimum of 200 feet of expanding cement below the Jawbone Seam unless the DM requires cleaning to a greater depth due to the geological strata, or due to the pressure within the well (the operator will provide the DM with all information it possesses concerning the geological nature of the strata and the pressure of the well). If the total depth of the well is 4,000 feet or greater, the operator will completely clean out the well from the surface to at least 400 feet below the base of Jawbone Seam.

(2) When cleaning out the well, the operator will make a diligent effort to remove all of the casing in the well. If it is not possible to remove all of the casing, then the operator will take appropriate steps to ensure that the annulus between the casing and the well walls are filled with expanding (minimum of 0.2% expansion upon setting) cement and contain no voids from 200 feet (400 feet if the total well depth is 4,000 feet or greater) below the base of the Jawbone Seam up to 100 feet above the Jawbone Seam. If the casing cannot be removed at the Jawbone Seam level, perforations will be established at every 50 feet from 200 feet (400 feet if the total well depth is 4,000 feet or greater) below the base of the Jawbone Seam and up to 100 feet above the Jawbone Seam to allow placement of expanding cement. When multiple casing and tubing strings are present in the coal horizon(s), any casing which remains will be perforated and filled with expanding cement. An acceptable casing bond log for each casing and tubing string will be used in lieu of perforating multiple strings.

(3) If the DM concludes that the cleaned-out well is emitting excessive amounts of gas, a mechanical bridge plug or cap seal plug will be placed in the borehole in a competent stratum at least 200 feet (400 feet if the total well depth is 4,000 feet or greater) below the base of the Jawbone Seam but above the top of the uppermost gas-producing stratum, unless the DM requires greater distance due to the geological stratum or due to the pressure within the well (the operator will provide the DM with all information it possesses concerning the geological nature of the strata and the pressure of the well). If it is not possible to set a mechanical bridge plug or cap seal plug, an appropriate size packer or a substantial brush plug may be used in place of the mechanical bridge plug or cap seal plug.

(4) The operator will prepare down-hole logs for each well that will consist of a caliper survey and log(s) suitable for determining the top, bottom, and thickness of the Jawbone Seam and potential gas-producing strata and the location for the bridge plug. Alternatively, the operator may use a down-hole camera survey in lieu of down-hole logs. In addition, a journal will be maintained describing the depth of each material encountered, the nature of each material encountered; bit size and type used to drill each portion of the hole; length and type of each material used to plug the well; length of casing(s) removed, perforated or left in place, any sections where casing was cut or milled; and other pertinent information concerning cleaning and sealing the well.

(5) If the uppermost gas-producing stratum is within 300 feet of the base of the Jawbone Seam, properly placed mechanical bridge plugs or cap seal plugs or a suitable brush plug will be used to isolate the gas-producing stratum from the expanding cement plug. Nevertheless, a minimum of 200 feet (400 feet if the total well depth is 4,000 feet or greater) of expanding cement will be placed below the Jawbone Seam unless the DM requires a greater distance due to the geological strata, or due to the pressure within the well.

The petitioner proposes to use the following procedures for plugging coalbed methane wells that will not be fully plugged prior to mining-through:

(1) The operator will pump expanding cement slurry down the well to form a plug which runs from at least 200 feet (400 feet if the total well depth is 4,000 feet or greater) below the base of the Jawbone Seam (or lower if required by the DM due to the geological strata, or due to the pressure within the well) to a depth of approximately 10 feet below the Jawbone Seam. The expanding cement will be placed in the well under pressure of at least 200 pounds per square inch.

(2) The top of the coalbed methane well casing will be fitted with a non-conductive wellhead equipped as required by the DM. Such equipment may include check valves, shut-in valves, sampling ports, flame arrestor equipment, and security fencing.

(3) If the coalbed methane well is intended to be left un-grouted during the cut-through process, the entire portion of the well below the Jawbone Seam will be plugged.

The petitioner proposes to use the following procedures for plugging wells for use as degasification boreholes:

(1) The operator will pump expanding cement slurry down the well to form a plug which runs from at least 200 feet (400 feet if the total well depth is 4,000 feet or greater) below the base of the Jawbone Seam (or lower if required by the DM due to the geological strata, or due to the pressure within the well) and extends upward to a point above the top of the Jawbone Seam. The distance the cement plug extends upward above the Jawbone Seam will be based on the average height of the roof strata breakage for the mine.

(2) To facilitate methane drainage, degasification casing of suitable diameter, slotted or perforated throughout its lowest 150 to 200 feet, will be set in the borehole to a point 10 to 30 feet above the top of the expanding cement.

(3) The annulus between the degasification casing and the borehole wall will be cemented from a point immediately above the slots or perforations to the surface.

(4) The degasification casing will be cleaned out for its total length.

(5) The top of the degasification casing will be fitted with a wellhead equipped as required by the DM. Such equipment may include check valves, shut-in valves, sampling ports, flame resistor equipment, security fencing, etc.

The petitioner proposes to use the following procedures after approval has been granted by the District Manager to mine within the safety barrier or to mine through a plugged or replugged well:

(1) A representative of the operator, a representative of the miners, the appropriate State agency, or the MSHA DM may request that a conference be conducted prior to mining through any plugged or replugged well. The purpose of the conference will be to review, evaluate, and accommodate any abnormal or unusual circumstances related to the condition of the well or surrounding strata when such conditions are encountered.

(2) The operator will mine through a well on a shift approved by the DM. The operator will notify the DM and the miner's representative in sufficient time prior to mining-through a well to provide an opportunity to have representatives present.

(3) When using continuous mining methods, drivage sights will be installed at the last open crosscut near the place

to be mined to assure intersection of the well. The drivage sights will not be more than 100 feet from the well. When using longwall-mining methods, drivage sights will be installed on 10-foot centers for a distance of 50 feet in advance of the wellbore. The drivage sights will be installed in the headgate and tailgate.

(4) A minimum of the following fire-fighting equipment, roof support supplies, and ventilation materials will be available and located at the last open crosscut on the intake side of the entry to cut into the well; three 20 pound CO_2 fire extinguishers, 20 bags of rock dust, sufficient fire hose to reach the working face, one hand-held methane monitor capable of reading high percentages of methane, a multi-gas detector carried by both the foreman and the continuous miner operator, sufficient curtain to reach the working face, eight timbers with headers and wedges, and two emergency plugs. The water line will be maintained to the belt conveyor tailpiece along with a sufficient amount of fire hose to reach the farthest point of penetration on the section.

(5) Equipment will be checked for permissibility and serviced no earlier than the shift prior to mining through the well. Water sprays, water pressures, and water flow rates used for dust and spark suppression will be examined and any deficiencies will be corrected.

(6) The methane monitors on the longwall, continuous mining machine, or cutting machine and loading machine will be calibrated on the shift prior to mining the well.

(7) When mining is in progress, tests for methane will be made with a hand-held methane detector at least every 10 minutes from the time that mining with the continuous mining machine or longwall face is within 30 feet of the well until the well is intersected and immediately prior to mining through it. During the actual cutting process, no individual will be allowed on the return side until mine-through has been completed and the area has been examined and declared safe. All workplace examinations will be conducted on the return side of the shearer while the shearer is idle.

(8) When using continuous or conventional mining methods, the working place will be free from accumulations of coal dust and coal spillages, and rock dust will be placed on the roof, rib and floor to within 20 feet of the face when mining through the well. On longwall sections, rock dusting will be conducted and placed on the roof, rib and floor up to both the headgate and tailgate gob.

(9) When intersecting an un-grouted hydro-fractured coalbed methane well in the Jawbone Seam, a high negative pressure blower with a minimum of negative 50 psi static pressure will be installed at the surface of the well and activated before the active face is a minimum distance of 500 feet from the well. The blower will be deactivated when the active face is a distance of 25 feet from the well. Alternatively, pressurized water may be used in lieu of a blower. A volume of fresh water sufficient to fill the hydro-fractured zone and the vertical well to the surface will be injected into the well, and the water level will be supplemented as required. When the active face encounters water from the injected well, if necessary, the well will be bailed to approximately the Jawbone Seam level. During the cut-through process, the surface of the well will be maintained in an open position to bring the vertical section of the wellbore to outside atmospheric pressure.

(10) When the wellbore is intersected, all equipment will be de-energized and the place thoroughly examined and determined safe before mining is resumed.

(11) After a well has been intersected and the working place determined safe, mining will continue inby the well at a distance sufficient to permit adequate ventilation around the area of the well.

(12) If the casing is cut or milled at the coal seam level, the use of torches should not be necessary. However, in rare instances, torches may be used for inadequately or inaccurately cut or milled casings. No open flame will be permitted in the area until adequate ventilation has been established around the wellbore and methane levels of less than 1.0% are present in all areas that will be exposed to flames and sparks from the torch. The operator will apply a thick layer of rock dust to the roof, face, floor, ribs and any exposed coal within 20 feet of the casing prior to use of torches.

(13) Non-sparking (brass) tools will be located on the working section and will be used to expose and examine cased walls.

(14) No person will be permitted in the area of the mine-through operation except those actually engaged in the operation, company personnel, representatives of the miners, personnel from MSHA, and personnel from the appropriate State agency.

(15) The operator will alert all personnel in the mine to the planned intersection of the well prior to their going underground if the planned intersection is to occur during their shift. This warning will be repeated for all shifts until the well has been mined through.

(16) The mine-through operation will be under the direct supervision of a certified official. Instructions concerning the mine-through operation will be issued only by the certified official in charge.

(17) The petitioner will file a plugging certification setting forth the persons who participated in the work, a description of the plugging work, and a certification by the petitioner that the well has been plugged.

(18) All miners involved in the mine-through will be trained regarding the requirements of the proposed terms and conditions of this petition prior to mining within 150 feet of the next well intended to be mined through.

(19) Within 30 days after the decision becomes final, the petitioner will submit proposed revisions for its approved mine emergency evacuation and firefighting plan required by 30 CFR 75.1501. The petitioner will revise the plans to include the hazards and evacuation procedures to be used for well intersections. All underground miners will be trained in this revised plan within 30 days of the submittal of the revised evacuation plan.

The petitioner asserts that the proposed alternative methods will at all times guarantee no less than the same measure of protection afforded the miners as the existing standard.

Docket Number: M–2013–023–C.

Petitioner: San Juan Coal Company, P.O. Box 561, Waterflow, New Mexico 87421.

Mine: San Juan Mine 1, MSHA I.D. No. 29–02170, located in San Juan County, New Mexico.

Regulation Affected: 30 CFR 75.503 (Permissible electric face equipment; maintenance), (18.35(a)(5)(i) (Portable (trailing) cables and cords)).

Modification Request: The petitioner requests a modification of the existing standard to permit higher maximum lengths on various trailing cables for the three-phase, 995-volt shuttle cars. The petitioner proposes to use the following three optional methods of operation:

(1) Incorporate an inline breaker box with 500 feet of No. 2/0 American Wire Gauge (AWG) 2kV, Type SHD–GC cable from the section transformer with 850 Feet of No. 2 AWG 2kV, Type G+GC cable to the shuttle car.

(2) Incorporate a single length 1000-foot cable of No. 2 AWG 2kV, Type G+GC to the shuttle car from the section transformer.

(3) Incorporate 500 feet of No. 2/0 AWG 2kV, Type SHD–GC cable from the section transformer to a multi-circuit distribution box with 850 feet of No. 2

AWG 2kV, Type G+GC cable to the shuttle car. Two shuttle cars will be powered from the distribution box.

The petitioner states that:

(1) The one-line diagrams and short-circuit calculation models included in the calculations reflect the actual existing San Juan Mines high-voltage electrical distribution system and continuous miner section electrical power distribution to be utilized. All three of the petitioner's options of operation have been included in the one-line diagrams and short-circuit analysis.

(2) The shuttle cars are rated at 995 volts root mean square (RMS) nominal, three-phase, 60 hertz. The nominal voltage of the continuous mining machine section electrical distribution system will not exceed 1,000 volts and 480 volts for the respective section transformer secondary voltages. Actual voltage at which the circuits or systems operate may vary slightly from the nominal voltage within a range that permits satisfactory operation of the equipment.

The petitioner further states that:

The first optional method of operation will be as follows:

(1) The maximum length of the trailing cable supplying three-phase, 995-volt power to the inline shuttle car breaker box will not exceed 500 feet of No. 2/0 AWG, 3C, 2kV, SHD–GC cable.

(2) All circuit breakers located in the section transformer used to protect the No. 2/0 AWG, 3C, 2kV, SHD–GC trailing cables 500 feet in length and supply 995-volt, three-phase power to the shuttle car inline breaker box will have instantaneous trip unit(s) in the section transformer adjusted to trip at 1,500 amperes.

(3) Replacement circuit breakers and/or instantaneous trip units, used to protect No. 2/0 AWG, 3C, 2kV, SHD–GC cables will be set to 1,500 amperes. The maximum length of the trailing cable supplying three-phase, 995-volt power to the shuttle car will not exceed 850 feet of No. 2 AWG, 3C, 2kV, G+GC cable.

(4) All circuit breakers in the shuttle car inline circuit breaker box used to protect the No. 2 AWG, 3C, 2kV, G+GC shuttle car trailing cables that exceed 700 feet in length and supply 995-volt, three-phase power to the shuttle car will have instantaneous trip unit(s) calibrated to trip at 800 amperes. The trip setting of these circuit breaker(s) will be sealed, and these circuit breakers will have permanent, legible labels. The label will identify the circuit breaker(s) as being specially calibrated circuit breaker(s) and as being suitable for protection No. 2 AWG, 3C, 2kV, G+GC cables. This label will be maintained legible.

(5) Replacement circuit breakers and/or instantaneous trip units, used to protect the 995-volt, No. 2 AWG, 3C, 2kV, G+GC cables in the inline shuttle car breaker box will be calibrated to trip at 800 amperes and this setting will be sealed.

(6) The short-circuit calculations of print 75–503–001 ILB will include the inline breaker and enclosure that will power the shuttle car. The inline breaker box will be mounted near the section loading point and be supplied from the section transformer. There will be one inline breaker box for the shuttle car.

The second optional method of operation will be as follows:

(1) The maximum length of the trailing cable supplying three-phase, 995-volt power to the shuttle car from the section transformer will not exceed 1,000 feet of No. 2 AWG, 3C, 2kV, G+GC cable.

(2) All section transformer circuit breakers used to protect the No. 2 AWG, 3C, 2kV, G+GC trailing cables that exceed 700 feet in length and supply 995-volt, three-phase power to the shuttle car will have instantaneous trip unit(s) calibrated to trip at 800 amperes. The trip setting of these circuit breaker(s) will be sealed and will have permanent, legible labels. The label will identify the circuit breaker(s) as being specially calibrated circuit breaker(s) and as being suitable to protect No. 2 AWG, 3C, 2kV, G+GC cables. This label will be maintained legible.

(3) Replacement circuit breakers and/or instantaneous trip units, used to protect the 995-volt, No. 2 AWG, 3C, 2kV, G+GC cables will be calibrated to trip at 800 amperes and this setting will be sealed.

(4) The short-circuit calculations of print 75–503–002 SC will include power from the section transformer.

The third optional method of operation will be as follows:

(1) The maximum length of the trailing cable supplying three-phase, 995-volt power to the distribution box will not exceed 500 feet of No. 2/0 AWG, 3C, 2kV, SHD–GC cable.

(2) All circuit breakers located in the section transformer used to protect the No. 2/0 AWG, 3C, 2kV, SHD–GC trailing cables 500 feet in length and supply 995-volt, three-phase power to the distribution box will have instantaneous trip unit(s) in the section transformer set to trip at 1,500 amperes.

(3) Replacement circuit breakers and/or instantaneous trip units, used to protect No. 2/0 AWG, 3C, 2kV, SHD–GC cables will be set to trip at 1,500 amperes.

(4) The maximum length of the trailing cable supplying three-phase, 995-volt power to the shuttle car will not exceed 850 feet of No. 2 AWG, 3C, 2kV, G+GC cable.

(5) All circuit breakers in the distribution box used to protect No. 2 AWG, 3C, 2kV, G+GC shuttle car trailing cables that exceed 700 feet in length and supply 995-volt, three-phase power to the shuttle car will have instantaneous trip unit(s) calibrated to trip at 800 amperes. The trip setting of these circuit breaker(s) will be sealed, and these circuit breakers will have permanent legible labels. The label will identify the circuit(s) as being specially calibrated circuit breaker(s) and as being suitable to protect No. 2 AWG, 3C, 2kV, G+GC cables. This label will be maintained legible.

(6) Replacement circuit breakers and/or instantaneous trip units used to protect the 995-volt, No. 2 AWG, 3C, 2kV, G+GC cables in the distribution box will be calibrated to trip at 800 amperes and this setting will be sealed.

(7) The short-circuit calculations of print 75–503–003 DBB will include the distribution box that will power the shuttle cars. The distribution box will be mounted near the section loading point and be supplied from the section transformer. There will be one distribution box and it will power two shuttle cars.

The petitioner also states that:

(1) The short-circuit calculations that were performed show that the proposed alternative method will meet the following requirements:

(a) Each trailing cable will be protected by an automatic three-pole molded case circuit breaker equipped with a means to provide short-circuit, grounded-phase, under-voltage, and ground monitoring protection for its entire length.

(b) The trailing cable short-circuit protection will be provided by means of an adjustable instantaneous trip unit that is integral to the circuit breaker that is set as required by 30 CFR 75.601–1, or 75 percent of the minimum available fault current, whichever is less. The short-circuit calculations determine the minimum phase-to-phase fault current available for each cable size, type, and length desired to be extended to lengths greater than allowable by statutory provisions.

(2) The trailing cables for the three proposed optional methods of operation will be protected by being hung on well-installed insulated hangers from the section transformer to the inline shuttle car breaker box and to the shuttle car

anchor under option 1, or from the section transformer to the shuttle car anchor under option 2, and from the section transformer to the distribution box and to the shuttle cars' anchors under option 3.

(3) During each production shift, persons designated by the operator will visually examine the trailing cables to ensure that the cables are in safe operating condition and that the instantaneous settings of the specially calibrated circuit breaker settings do not have seals broken or removed. The weekly inspection examination record of this requirement will be kept by the operator and made available to an authorized representative of the Secretary and to the miners in the San Juan Mine 1.

(4) Trailing cables that are not in safe operating condition will be removed from service immediately and repaired or replaced.

(5) Each splice or repair in the trailing cables to the inline breaker box, distribution box and shuttle car will be made in workman-like manner and in accordance with the instructions of the manufacturer of the splice or repair kit. The outer jacket of each splice or repair will be vulcanized with flame-resistant material or made with material that has been accepted by MSHA as flame-resistant.

(6) If the mining methods or operating procedures cause or contribute to the damage of any trailing cable, the cable will be removed from service immediately, repaired or replaced, and additional precautions will be taken to ensure that in the future, the cable is protected and maintained in safe operating condition.

(7) Permanent warning labels will be installed and maintained on the cover(s) of each specially calibrated circuit breaker indicating that the cable can only be connected to a circuit breaker that is set to trip at its pre-determined instantaneous value. The labels will warn miners not to change or alter the sealed short-circuit settings.

(8) The petitioner's proposed alternative method will not be implemented until all miners who have been designated to examine the integrity of seals, verify the short-circuit settings, and examine trailing cables for defects and damage have received training.

(9) Within 60 days after the proposed decision and order becomes final, the petitioner will submit proposed revisions for its approved 30 CFR part 48 training plan to the District Manager for the area where the mine is located. The proposed revisions will specify task training for miners designated to verify that the short-circuit settings of the specially calibrated circuit interrupting device(s) that protect the affected trailing cables do not exceed the specified setting(s). The training will include:

(a) The hazards of setting short-circuit interrupting device(s) too high to adequately protect the trailing cables; and

(b) How to verify that the circuit interrupting device(s) protecting the trailing cable(s) are properly set and maintained.

The petitioner asserts that the proposed alternative method will at all times provide an equal or higher degree of safety as provided by the existing standard.

Dated: June 10, 2013.

George F. Triebsch,

Director, Office of Standards, Regulations and Variances.

[FR Doc. 2013–14109 Filed 6–13–13; 8:45 am]

BILLING CODE 4510–43–P

DEPARTMENT OF LABOR

Office of Workers' Compensation Programs

Proposed Extension of the Approval of Information Collection Requirements

ACTION: Notice.

SUMMARY: The Department of Labor, as part of its continuing effort to reduce paperwork and respondent burden, conducts a preclearance consultation program to provide the general public and Federal agencies with an opportunity to comment on proposed and/or continuing collections of information in accordance with the Paperwork Reduction Act of 1995 (PRA95) [44 U.S.C. 3506(c)(2)(A)]. This program helps to ensure that requested data can be provided in the desired format, reporting burden (time and financial resources) is minimized, collection instruments are clearly understood, and the impact of collection requirements on respondents can be properly assessed. Currently, the Office of Workers' Compensation Programs is soliciting comments concerning the proposed collection: Medical Travel Refund Request (OWCP–957). A copy of the proposed information collection request can be obtained by contacting the office listed below in the addresses section of this Notice.

DATES: Written comments must be submitted to the office listed in the addresses section below on or before August 13, 2013.

ADDRESSES: Mr. Vincent Alvarez, U.S. Department of Labor, 200 Constitution Ave. NW., Room S–3201, Washington, DC 20210, telephone (202) 693–0372, fax (202) 693–2447, Email *alvarez.vincen@dol.gov.* Please use only one method of transmission for comments (mail, fax, or Email).

SUPPLEMENTARY INFORMATION: *I. Background:* The Office of Workers' Compensation Programs (OWCP) is the agency responsible for administration of the Federal Employees' Compensation Act (FECA), 5 U.S.C. 8101 *et seq.,* the Black Lung Benefits Act (BLBA), 30 U.S.C. 901 *et seq.,* and the Energy Employees Occupational Illness Compensation Program Act of 2000 (EEOICPA), 42 U.S.C. 7384 *et seq.* All three of these statutes require that OWCP reimburse beneficiaries for travel expenses for covered medical treatment. In order to determine whether amounts requested as travel expenses are appropriate, OWCP must receive certain data elements, including the signature of the physician for medical expenses claimed under the BLBA. Form OWCP–957 is the standard format for the collection of these data elements. The regulations implementing these three statutes allow for the collection of information needed to enable OWCP to determine if reimbursement requests for travel expenses should be paid. This information collection is currently approved for use through October 31, 2013.

II. Review Focus: The Department of Labor is particularly interested in comments which:

* Evaluate whether the proposed collection of information is necessary for the proper performance of the functions of the agency, including whether the information will have practical utility;

* evaluate the accuracy of the agency's estimate of the burden of the proposed collection of information, including the validity of the methodology and assumptions used;

* enhance the quality, utility and clarity of the information to be collected; and

* minimize the burden of the collection of information on those who are to respond, including through the use of appropriate automated, electronic, mechanical, or other technological collection techniques or other forms of information technology, e.g., permitting electronic submissions of responses.

III. Current Actions: The Department of Labor seeks approval for the extension of this information collection in order to carry out its responsibility to determine if requests for reimbursement for out-of-pocket expenses incurred

when traveling to medical providers for covered medical testing or treatment should be paid.

Type of Review: Extension.

Agency: Office of Workers' Compensation Programs.

Title: Medical Travel Refund Request.

OMB Number: 1240–0037.

Agency Number: CM–957.

Affected Public: Individual or households.

Total Respondents: 302,794.

Total Responses: 302,794.

Time per Response: 10 minutes.

Estimated Total Burden Hours: 50,263.

Total Burden Cost (capital/startup): $0.

Total Burden Cost (operating/maintenance): $148,369.

Comments submitted in response to this notice will be summarized and/or included in the request for Office of Management and Budget approval of the information collection request; they will also become a matter of public record.

Dated: June 10, 2013.

Vincent Alvarez,

Agency Clearance Officer, Office of Workers' Compensation Programs, U.S. Department of Labor.

[FR Doc. 2013–14104 Filed 6–13–13; 8:45 am]

BILLING CODE 4510–CR–P

DEPARTMENT OF LABOR

Office of Workers' Compensation Programs

Division of Coal Mine Workers' Compensation; Proposed Collection; Comment Request

ACTION: Notice.

SUMMARY: The Department of Labor, as part of its continuing effort to reduce paperwork and respondent burden, conducts a pre-clearance consultation program to provide the general public and Federal agencies with an opportunity to comment on proposed and/or continuing collections of information in accordance with the Paperwork Reduction Act of 1995 (PRA95) [44 U.S.C. 3506(c)(2)(A)]. This program helps to ensure that requested data can be provided in the desired format, reporting burden (time and financial resources) is minimized, collection instruments are clearly understood, and the impact of collection requirements on respondents can be properly assessed. Currently, the Office of Workers' Compensation Programs is soliciting comments concerning the proposed collection: Survivor's Form for Benefits (CM–912). A copy of the proposed information collection request can be obtained by contacting the office listed below in the **ADDRESSES** section of this Notice.

DATES: Written comments must be submitted to the office listed in the addresses section below on or before August 13, 2013.

ADDRESSES: Mr. Vincent Alvarez, U.S. Department of Labor, 200 Constitution Ave. NW., Room S–3201, Washington, DC 20210, telephone (202) 693–0372, fax (202) 693–1447, Email *alvarez.vincent@dol.gov.* Please use only one method of transmission for comments (mail, fax, or Email).

SUPPLEMENTARY INFORMATION:

I. Background: This collection of information is required to administer the benefit payment provisions of the Black Lung Act for survivors of deceased miners. Completion of this form constitutes the application for benefits by survivors and assists in determining the survivor's entitlement to benefits. Form CM–912 is authorized for use by the Black Lung Benefits Act 30 U.S.C. 901, et seq., 20 CFR 410.221 and CFR 725.304 and is used to gather information from a survivor of a miner to determine if the survivor is entitled to benefits. This information collection is currently approved for use through October 31, 2013.

II. Review Focus: The Department of Labor is particularly interested in comments which:

* Evaluate whether the proposed collection of information is necessary for the proper performance of the functions of the agency, including whether the information will have practical utility;

* evaluate the accuracy of the agency's estimate of the burden of the proposed collection of information, including the validity of the methodology and assumptions used;

* enhance the quality, utility and clarity of the information to be collected; and

* minimize the burden of the collection of information on those who are to respond, including through the use of appropriate automated, electronic, mechanical, or other technological collection techniques or other forms of information technology, e.g., permitting electronic submissions of responses.

III. Current Actions: The Department of Labor seeks the approval for the extension of this currently-approved information collection in order to gather information to determine eligibility for benefits of a survivor of a Black Lung Act beneficiary.

Type of Review: Extension.

Agency: Office of Workers' Compensation Programs.

Title: Survivor's Form for Benefits.

OMB Number: 1240–0027.

Agency Number: CM–912.

Affected Public: Individuals or households.

Total Respondents: 1100.

Total Annual Responses: 1100.

Average Time per Response: 8 minutes.

Estimated Total Burden Hours: 147.

Frequency: One time.

Total Burden Cost (capital/startup): $0.

Total Burden Cost (operating/maintenance): $441.

Comments submitted in response to this notice will be summarized and/or included in the request for Office of Management and Budget approval of the information collection request; they will also become a matter of public record.

Dated: June 10, 2013.

Vincent Alvarez,

Agency Clearance Officer, Office of Workers' Compensation Programs, US Department of Labor.

[FR Doc. 2013–14103 Filed 6–13–13; 8:45 am]

BILLING CODE 4510–CK–P

NATIONAL FOUNDATION ON THE ARTS AND THE HUMANITIES

Meetings of Humanities Panel

AGENCY: National Endowment for the Humanities, National Foundation of the Arts and the Humanities.

ACTION: Notice of meetings.

SUMMARY: Pursuant to section 10(a)(2) of the Federal Advisory Committee Act, notice is hereby given that 25 meetings of the Humanities Panel will be held during July, 2013 as follows. The purpose of the meetings is for panel review, discussion, evaluation, and recommendation of applications for financial assistance under the National Foundation on the Arts and Humanities Act of 1965, as amended.

DATES: See **SUPPLEMENTARY INFORMATION** section for meeting dates.

ADDRESSES: The meetings will be held at the Old Post Office Building, 1100 Pennsylvania Ave. NW., Washington, DC 20506. See Supplementary Information section for meeting room numbers.

FOR FURTHER INFORMATION CONTACT: Lisette Voyatzis, Committee Management Officer, 1100 Pennsylvania Ave. NW., Room 529, Washington, DC 20506, or call (202) 606–8322. Hearing impaired individuals are advised that information on this matter may be

obtained by contacting the National Endowment for the Humanities' TDD terminal at (202) 606–8282.

SUPPLEMENTARY INFORMATION:

Meetings

1. *Date:* July 09, 2013.
Time: 8:30 a.m. to 5:00 p.m.
Room: 420.
This meeting will discuss applications for Challenge Grants from colleges and universities, submitted to the Office of Challenge Grants.
2. *Date:* July 16, 2013.
Time: 8:30 a.m. to 5:00 p.m.
Room: 315.
This meeting will discuss applications for the Awards for Faculty grant program on the subjects of Literature, Philosophy, and the Arts, submitted to the Division of Research Programs.
3. *Date:* July 16, 2013.
Time: 8:30 a.m. to 5:00 p.m.
Room: Room 420.
This meeting will discuss applications for Challenge Grants from historical organizations, submitted to the Office of Challenge Grants.
4. *Date:* July 16, 2013.
Time: 8:30 a.m. to 5:00 p.m.
Room: 315.
This meeting will discuss applications for the Awards for Faculty grant program on the subjects of History, Social Science, and Education, submitted to the Division of Research Programs.
5. *Date:* July 17, 2013.
Time: 8:30 a.m. to 5:00 p.m.
Room: 415.
This meeting will discuss applications for the Awards for Faculty grant program on the subjects of American History, Politics, and Studies, submitted to the Division of Research Programs.
6. *Date:* July 18, 2013.
Time: 8:30 a.m. to 5:00 p.m.
Room: 420.
This meeting will discuss applications for Challenge Grants from colleges and universities, submitted to the Office of Challenge Grants.
7. *Date:* July 18, 2013.
Time: 8:30 a.m. to 5:00 p.m.
Room: 315.
This meeting will discuss applications for the Fellowships for University Teachers grant program on the subject of British Literature, submitted to the Division of Research Programs.
8. *Date:* July 18, 2013.
Time: 8:30 a.m. to 5:00 p.m.
Room: 415.
This meeting will discuss applications for the Fellowships for University Teachers grant program on the subject of British Literature, submitted to Division of Research Programs.
9. *Date:* July 22, 2013.
Time: 8:30 a.m. to 5:00 p.m.
Room: 415.
This meeting will discuss applications for the Fellowships for Advanced Research on Japan grant program, submitted to the Division of Research Programs.
10. *Date:* July 22, 2013.
Time: 8:30 a.m. to 5:00 p.m.
Room: 315.
This meeting will discuss applications for the Fellowships for University Teachers grant program on the subjects of Sociology, Anthropology, Psychology, and History of Science, submitted to the Division of Research Programs.
11. *Date:* July 23, 2013.
Time: 8:30 a.m. to 5:00 p.m.
Room: 315.
This meeting will discuss applications for the Fellowships for University Teachers grant program on the subject of Music, submitted to the Division of Research Programs.
12. *Date:* July 23, 2013.
Time: 8:30 a.m. to 5:00 p.m.
Room: 415.
This meeting will discuss applications for the Fellowships for University Teachers grant program on the subjects of Art History and Old World Archaeology, submitted to the Division of Research Programs.
13. *Date:* July 23, 2013.
Time: 8:30 a.m. to 5:00 p.m.
Room: 420.
This meeting will discuss applications for Challenge Grants from research institutions, submitted to the Office of Challenge Grants.
14. *Date:* July 24, 2013.
Time: 8:30 a.m. to 5:00 p.m.
Room: 315.
This meeting will discuss applications for the Fellowships for University Teachers grant program on the subject of Philosophy, submitted to the Division of Research Programs.
15. *Date:* July 24, 2013.
Time: 8:30 a.m. to 5:00 p.m.
Room: 415.
This meeting will discuss applications for the Fellowships for University Teachers grant program on the subject of Philosophy, submitted to the Division of Research Programs.
16. *Date:* July 25, 2013.
Time: 8:30 a.m. to 5:00 p.m.
Room: 420.
This meeting will discuss applications for Challenge Grants on the subjects of Art and Anthropology, submitted to the Office of Challenge Grants.
17. *Date:* July 25, 2013.
Time: 8:30 a.m. to 5:00 p.m.
Room: 415.
This meeting will discuss applications for the Fellowships for University Teachers grant program on the subjects of Literary Theory and Film, submitted to the Division of Research Programs.
18. *Date:* July 25, 2013.
Time: 8:30 a.m. to 5:00 p.m.
Room: 315.
This meeting will discuss applications for the Fellowships for University Teachers grant program on the subject of Comparative Literature, submitted to the Division of Research Programs.
19. *Date:* July 26, 2013.
Time: 8:30 a.m. to 5:00 p.m.
Room: 315
This meeting will discuss applications for the Fellowships for University Teachers grant program on the subject of American History, submitted to the Division of Research Programs.
20. *Date:* July 29, 2013.
Time: 8:30 a.m. to 5:00 p.m.
Room: 315.
This meeting will discuss applications for the Fellowships for University Teachers grant program on the subjects of South and Southeast Asian Studies, submitted to the Division of Research Programs.
21. *Date:* July 30, 2013.
Time: 8:30 a.m. to 5:00 p.m.
Room: 420.
This meeting will discuss applications for Challenge Grants for funding public programming, submitted to the Office of Challenge Grants.
22. *Date:* July 30, 2013.
Time: 8:30 a.m. to 5:00 p.m.
Room: 315.
This meeting will discuss applications for the Fellowships for University Teachers grant program on the subject of European History, submitted to the Division of Research Programs.
23. *Date:* July 30, 2013.
Time: 8:30 a.m. to 5:00 p.m.
Room: 415.
This meeting will discuss applications for the Fellowships for University Teachers grant program on the subject of European History,

submitted to the Division of Research Programs.

24. *Date:* July 31, 2013.
Time: 8:30 a.m. to 5:00 p.m.
Room: 415.
This meeting will discuss applications for the Fellowships for University Teachers grant program on the subject of American Literature, submitted to the Division of Research Programs.

25. *Date:* July 31, 2013.
Time: 8:30 a.m. to 5:00 p.m.
Room: 315.
This meeting will discuss applications for the Fellowships for University Teachers grant program and Anthropology and New World Archaeology, submitted to the Division of Research Programs.

Because these meetings will include review of personal and/or proprietary financial and commercial information given in confidence to the agency by grant applicants, the meetings will be closed to the public pursuant to sections 552b(c)(4) and 552b(c)(6) of Title 5 U.S.C., as amended. I have made this determination pursuant to the authority granted me by the Chairman's Delegation of Authority to Close Advisory Committee Meetings dated July 19, 1993.

Dated: June 10, 2013.

Lisette Voyatzis,

Committee Management Officer.

[FR Doc. 2013–14108 Filed 6–13–13; 8:45 am]

BILLING CODE 7536–01–P

NATIONAL SCIENCE FOUNDATION

Proposal Review Panel for Ocean Sciences; Notice of Meeting

In accordance with the Federal Advisory Committee Act Pub. L. 92–463, as amended), the National Science Foundation announces the following meeting.

Name: Proposal Review Panel for Ocean Sciences (#10752).

Date & Time: June 18–19, 2013, 8:30 a.m.–5:00 p.m.

Place: National Science Foundation; 4201 Wilson Blvd., Arlington, VA 22230, Stafford I, Room 730.

Type of Meeting: Partially Closed.

Contact Person: Baris M. Uz, Program Director, Physical Oceanography, Division of Ocean Sciences; National Science Foundation, 4201 Wilson Blvd., Arlington, VA 22230. Telephone: (703) 292–8582.

Purpose of Meeting: To provide advice and recommendations concerning progress of the Coastal Margin Observatory and Prediction Science and Technology Center (CMOP).

Agenda

Tuesday, June 18, 2013

9:00 a.m.–12:00 p.m. Presentations by CMOP investigators (open)
1:00 p.m.–4:00 p.m. Continued CMOP presentations, questions & answers (open)
4:00 p.m.–4:30 p.m. Site Visit team discusses list of overnight questions to CMOP (closed)

Wednesday, June 19

9:00 a.m.–10:00 a.m. CMOP presents answers to overnight questions (open)
10:00 a.m.–3:00 p.m. Site Visit team discussion, work on report (closed)
3:00 p.m.–4:30 p.m. Site Visit team may present report (closed)

Reason For Late Notice: Due to unexpected scheduling complications and the necessity to proceed with the review.

Reason For Closing: During closed sessions the review will include information of confidential nature, including technical information; financial data, such as salaries; and personal information concerning individuals associated with the proposals. These matters are exempt under 5 U.S.C. 552b(c), (4) and (6) of the Government in The Sunshine Act.

Dated: June 10, 2013.

Susanne Bolton,

Committee Management Officer.

[FR Doc. 2013–14095 Filed 6–13–13; 8:45 am]

BILLING CODE 7555–01–P

NUCLEAR REGULATORY COMMISSION

[NRC–2013–0127]

Interim Eligible Class of NRC-Licensed Facilities; Docket Nos. (as Shown in Attachment 1), License Nos. (as Shown in Attachment 1), EA–13–092; Order Designating an Interim Class of NRC-Licensed Facilities That Are Eligible To Apply to the Commission for Authorization To Use the Authority Granted Under the Provisions of Section 161a of the Atomic Energy Act of 1954, as Amended

I

In accordance with the Atomic Energy Act (AEA) of 1954, as amended, the licensees identified in Attachment 1 to this Order hold licenses issued by the U.S. Nuclear Regulatory Commission (NRC) authorizing the operation of nuclear power reactor facilities licensed under Part 50 of Title 10 of the *Code of Federal Regulations* (10 CFR), ''Domestic Licensing of Production and Utilization Facilities,'' a Category I special nuclear material (CAT–I SNM) facility licensed under 10 CFR Part 70, ''Domestic Licensing of Special Nuclear Material,'' and an Independent Spent Fuel Storage Installation (ISFSI) licensed under 10 CFR Part 72, ''Licensing Requirements for the Independent Storage of Spent Nuclear Fuel, High-Level Radioactive Waste, and Reactor-Related Greater Than Class C Waste,'' whose physical security program is conducted as a support activity of the co-located power reactor facility respectively.

Specific physical protection program requirements for nuclear power reactors are contained in 10 CFR 73.55, ''Requirements for Physical Protection of Licensed Activities in Nuclear Power Reactors Against Radiological Sabotage.'' Specific physical protection program requirements for CAT–I SNM facilities are contained in 10 CFR 73.45, ''Performance Capabilities for Fixed Site Physical Protection Systems,'' and 10 CFR 73.46, ''Fixed Site Physical Protection Systems, Subsystems, Components, and Procedures.'' Specific physical protection program requirements for ISFSIs are contained in 10 CFR 73.51, ''Requirements for the Physical Protection of Stored Spent Nuclear Fuel and High-Level Radioactive Waste,'' and 10 CFR 73.55.

II

Section 161A, ''Use of Firearms by Security Personnel,'' of the AEA (42 United States Code (U.S.C.) 2201a) confers upon the Commission the authority to permit the security personnel at designated NRC-licensed facilities to possess and use firearms, ammunition, and other devices, such as large-capacity ammunition feeding devices, notwithstanding local, State, and certain Federal firearms laws that may prohibit such possession and use.

The provisions of Section 161A took effect on September 11, 2009, with publication in the **Federal Register** (FR) of the guidelines approved by the NRC and the U.S. Attorney General entitled, ''Guidelines on the Use of Firearms by Security Personnel in Protecting U.S. NRC Regulated Facilities, Radioactive Material, and Other Property'' (74 FR 46800; September 11, 2009) (referred to as ''Firearms Guidelines'').

The NRC is issuing EA–13–092 to implement the authority granted to the Commission under Section 161A before the completion and issuance of a final rule implementing this authority. The Commission is taking this interim action

in response to several requests from NRC licensees for Commission authorization to use Section 161A preemption authority.

Specifically, this Order accomplishes the following:

1. Designates an interim class of NRC-licensed facilities, as listed in Attachment 1, that are eligible to apply to the Commission for authorization to use

Section 161A preemption authority;

2. Provides a process for submitting an application to the Commission for authorization to use Section 161A preemption authority, in accordance with Attachment 2; and,

3. Requires that the licensees listed in Attachment 1 of this Order subject all personnel who require access to firearms in the performance of their official duties to a firearms background check in accordance with Section 161A.c as described in Attachment 3.

Nothing in this Order relieves a licensee from compliance with applicable U.S. Department of Alcohol, Tobacco, Firearms, and Explosives requirements, or any other Federal, State, and local firearms laws and regulations. This Order does not provide or grant any authority or permission to transfer, receive, possess, transport, import, or use ''enhanced weapons'' as this term is defined in Section 8 of the Firearms Guidelines. The Commission's authority under Section 161A does not include any permission to transfer, receive, possess, transport, import, or use destructive devices as defined under 27 U.S.C. Chapter 53, ''The National Firearms Act,'' including explosive devices such as grenades or weapons with a bore diameter greater than 12.7 mm (0.5 inches or 50 caliber).

As authorized under Section 161A, and as described in Section 2 of the Firearms Guidelines, the Commission is issuing this Order to designate the licensees listed in Attachment 1 as an interim class of NRC-licensed facilities that may voluntarily apply to the Commission for authorization to use Section 161A preemption authority in advance of the Commission's issuance of a final rule on this subject.

A licensee's application for permission to use Section 161A preemption authority is voluntary and, therefore, the designated facilities listed in Attachment 1 are not required to submit an application in response to this Order. However, the designated facilities are required to conduct firearms background checks in accordance with Attachment 3 to this Order. If a licensee at a designated facility chooses to take advantage of the provisions of Section 161A, an application must be submitted to the NRC, in accordance with Attachment 2. In addition, applications and other documents produced in response to this Order that contain classified information, as defined in 10 CFR part 95, ''Facility Security Clearance and Safeguarding of National Security Information and Restricted Data,'' or Safeguards Information as defined by 10 CFR 73.22, ''Protection of Safeguards Information: Specific Requirements,'' shall be properly marked and handled, in accordance with applicable requirements in 10 CFR part 95, 10 CFR 73.21, ''Protection of Safeguards Information: Performance Requirements,'' and 10 CFR 73.22.

III

As discussed above, the Commission has designated the facilities listed in Attachment 1 as an interim class of NRC-licensed facilities that are eligible to apply to the NRC for Commission authorization to use Section 161A preemption authority. Licensees choosing to apply to the Commission for Section 161A preemption authority must meet the following conditions:

1. The NRC-licensed facility must be in the class of facilities designated by the Commission in Attachment 1 as eligible to apply for preemption authority.

2. The licensee must employ covered weapons (as defined in the Firearms Guidelines) as part of their protective strategy.

3. Possession, use, or access to covered weapons must be necessary in the discharge of official duties by personnel at a facility in the class of facilities designated by the Commission in Attachment 1 as eligible to apply for preemption authority.

Licensees of the facilities listed in Attachment 1 that choose to apply for permission to use Section 161A preemption authority must use the application process outlined in Attachment 2 and must submit the application in accordance with the provisions of 10 CFR 50.90, ''Application for Amendment of License, Construction Permit, or Early Site Permit,'' or 10 CFR 70.34, ''Amendment of Licenses,'' and 10 CFR 72.56, ''Application for Amendment of License,'' as appropriate. Applications will be subject to a minimum of 60 days for routine processing. Submittal of an application to the NRC is voluntary and, therefore, recipients of this Order are not required to apply.

Applications must include, at a minimum, all the information specified in Attachment 2. All applications will be reviewed on a case-by-case basis. If an application is approved by the Commission, authorization to use Section 161A preemption authority will be granted by the Commission through a confirmatory order that will permit the security personnel at the affected facility to possess and use firearms and large-capacity ammunition feeding devices that were not previously permitted to be owned or possessed under Commission authority, notwithstanding local, State, and certain Federal firearms laws (and implementing regulations) that would otherwise prohibit such possession and use.

Licensees of the facilities listed in Attachment 1 are required to conduct firearms background checks of all personnel who require access to any firearm listed in Section 161A.b in the performance of their official duties, as provided in Attachment 3 to this Order, whether the licensee applies for preemption authority or not. Such personnel shall be subject to a firearms background check by the U.S. Attorney General consisting of a fingerprint-based background check against applicable Federal Bureau of Investigation (FBI) databases and a name-based background check against the FBI's National Instant Criminal Background Check System. Accordingly, all licensees at the designated facilities listed in Attachment 1 shall submit a completed hard-copy FBI Form FD–258, ''Fingerprint Card,'' to the NRC as specified in Attachment 3, for all security personnel who will receive, possess, transport, import, or use any firearm, weapon, ammunition, or a device listed in Section 161A.b. Each licensee must also remit to the NRC a $70 administrative processing fee for each FBI Form FD–258 submitted to the NRC for the conduct of the required firearms background checks. Payment shall be made to the NRC using the processes described in Attachment 3.

IV

Accordingly, under Sections 53, 103 or 104b (depending on the license), Sections 161b, 161i, 161o, 161A, and 182 of the AEA of 1954, as amended, and the Commission's regulations in 10 CFR 2.202, 10 CFR Part 50, 10 CFR Part 70, and 10 CFR Part 72, *it is hereby ordered* that all recipients of this Order as listed in Attachment 1 shall:

1. Subject all individuals who are assigned duties that require the possession, use, or access to firearms and devices listed in Section 161A.b to a firearms background check in accordance with Section 161A.c ''Background Checks,'' and the process specified in Attachment 3.

2. Begin submitting requests for firearms background checks within 30 days of the effective date of this Order, and complete all firearms background checks within 180 days of the effective date of this Order.

3. Notify the NRC after a sufficient number of personnel have successfully completed the requisite firearms background check such that the licensee's security organization can be staffed as specified in each licensee's NRC-approved security plans, and the licensee's site protective strategy and procedures can be effectively implemented, while meeting applicable fatigue requirements in 10 CFR Part 26, ''Fitness for Duty Programs.'' This notification shall be submitted by the licensee or duly authorized officer thereof in writing and under oath and affirmation.

4. Notify the NRC as soon as practicable and in accordance with the applicable reporting requirements in 10 CFR 73.71, ''Reporting of Safeguards Events,'' of any situation in which the licensee would not be able to sufficiently staff the security organization within 180 days of the effective date of this Order.

5. Remit to the NRC a $70 administrative processing fee for each firearms background check requested using the processes outlined in Attachment 3.

Notifications shall be submitted to the Director of the NRC licensing office responsible for licensing actions at the affected facility and shall be marked and protected as required for the sensitivity of the information presented. As applicable, the Director, Office of Nuclear Reactor Regulation, the Director, Office of Nuclear Material Safety and Safeguards, or the Director, Office of Federal and State Materials and Environmental Management Programs may, in writing, relax or rescind any of the above conditions upon demonstration by the Licensee of good cause.

This Order is effective 20 days after the date of issuance.

Publicly available documents created or received at the NRC are available at the NRC's Public Document Room (PDR), located at One White Flint North, Public File Area, Room 01–F21, 11555 Rockville Pike (first floor), Rockville, Maryland 20852. Publicly available documents created or received at the NRC are also accessible electronically through the Agencywide Documents Access and Management System (ADAMS) in the NRC Library at *http://www.nrc.gov/reading-rm/adams.html.* Persons who do not have access to ADAMS or who encounter problems in accessing the documents located in ADAMS should contact the NRC's PDR reference staff by telephone at 1–800–397–4209 or 301–415–4737, or by email to *pdr.resource@nrc.gov.*

Dated at Rockville, Maryland, this 5th day of June 2013.

For the Nuclear Regulatory Commission.

Catherine Haney,

Director, Office of Nuclear Material Safety and Safeguards.

Mark Satorius,

Director, Office of Federal and State Materials and Environmental Management Programs.

Daniel H. Dorman,

Acting Director, Office of Nuclear Reactor Regulation.

Attachment 1: List of Affected Licensees

Babcock & Wilcox Nuclear Operation Group–Lynchburg, Docket No. 70–027, License No. SNM–42, Mr. Sandy Baker, President, Babcock & Wilcox, Nuclear Operations Group–Lynchburg, 2016 Mount Athos Road, Lynchburg, VA 24504.

Calvert Cliffs Nuclear Power Plant, Units 1 and 2, Docket Nos. 50–317 and 50–318, License Nos. DPR–53 and DPR–69, Calvert Cliffs Independent Spent Fuel Storage Installation, Docket No. 72–8, Specific License No. SNM–2505, Mr. George H. Gellrich, Vice President, Calvert Cliffs Nuclear Power Plant, LLC., Calvert Cliffs Nuclear Power Plant, 1650 Calvert Cliffs Parkway, Lusby, MD 20657–4702.

Diablo Canyon Nuclear Power Plant, Units 1 and 2, Docket Nos. 50–275 and 50–323, License Nos. DPR–80 and DPR–82, Diablo Canyon-Independent Spent Fuel Storage Installation, Docket No. 72–26, Specific-License No. SNM–2511, Mr. John T. Conway, Senior Vice President—Energy Supply and Chief Nuclear Officer, Pacific Gas and Electric Company, Diablo Canyon Power Plant, 77 Beale Street, Mail Code B32, San Francisco, CA 94105.

Indian Point Nuclear Generating, Unit 1, Docket No. 50–003, License No. DPR–5, Indian Point Nuclear Generating, Units 2, and 3, Docket Nos. 50–247, 50–286, and 72–51, License Nos. DPR–26 and DPR–64, Mr. John Ventosa, Vice President, Operations, Entergy Nuclear Operations, Inc., Indian Point Energy Center, 450 Broadway, GSB, P.O. Box 249, Buchanan, NY 10511–0249.

James A. FitzPatrick Nuclear Power Plant, Docket Nos. 50–333 and 72–12, License No. DPR–59, Mr. Mike Colomb, Vice President, Operations, Entergy Nuclear Operations, Inc., James A. FitzPatrick Nuclear Power Plant, P.O. Box 110, Lycoming, NY 13093.

Nine Mile Point Nuclear Station, Units 1 and 2, Docket Nos. 50–220, 50–410, and 72–1036, License Nos. DPR–63 and NPF–69, Mr. Ken Langdon, Vice President Nine Mile Point, Nine Mile Point Nuclear Station, LLC, P.O. Box 63, Lycoming, NY 13093.

R.E. Ginna Nuclear Power Plant, Docket Nos. 50–244 and 72–67, License No. DPR–18, Mr. Joseph E. Pacher, Vice President, R.E. Ginna Nuclear Power Plant, LLC, R.E. Ginna Nuclear Power Plant, 1503 Lake Road, Ontario, NY 14519.

San Onofre Nuclear Generating Station, Units 2 and 3, Docket Nos. 50–361, 50–362, and 72–41, License Nos. NPF–10 and NPF–15, Mr. Peter T. Dietrich, Senior Vice President and Chief Nuclear Officer, Southern California Edison Company, San Onofre Nuclear Generating Station, P.O. Box 128, San Clemente, CA 92674–0128.

Attachment 2: Application Process for Requesting Commission Authorization to Use Section 161A Preemption Authority

Recipients of EA–13–092 are within the interim class of facilities designated by the U.S. Nuclear Regulatory Commission (NRC) as eligible to voluntarily apply for Commission authorization to use preemption authority under Section 161A of the Atomic Energy Act of 1954, as amended (42 U.S.C. 2201a). Applications must be submitted to the NRC for review and approval under the provisions of Title 10 of the *Code of Federal Regulations* (10 CFR) 50.90, ''Application for Amendment of License, Construction Permit, or Early Site Permit,'' or 10 CFR 70.34 ''Amendment of Licenses,'' and 10 CFR 72.56 ''Application for Amendment of License'' as appropriate, and will be reviewed and approved individually on a case-by-case basis.

If an application is approved by the Commission, permission to use Section 161A preemption authority will be granted under a confirmatory order and will permit the security personnel of the licensee granted such permission to possess and use weapons, devices, ammunition, or other firearms, notwithstanding local, State, and certain Federal firearms laws that may prohibit such possession and use. Licensees must receive permission from the NRC through a confirmatory order before they are authorized to use Section 161A preemption authority.

Licensees that choose to apply for Section 161A preemption authority must meet the following criteria: (1) The

licensee must be in the class of facilities designated by the Commission in Attachment 1; (2) the licensee must employ covered weapons (as defined in the ''Guidelines on the Use of Firearms by Security Personnel in Protecting U.S. NRC-Regulated Facilities, Radioactive Material, and Other Property,'' (74 FR 46800; September 11, 2009) (''Firearms Guidelines'')) as part of its protective strategy; and (3) access to, or possession of, covered weapons must be necessary in the discharge of official duties by personnel assigned to the individual facility falling within the class of facilities designated by the Commission.

A single application should be submitted to the NRC in the form of a letter and, at a minimum, must contain the following:

- Name of the licensee
- facility name
- docket number and license number (to include Independent Spent Fuel Storage Installation docket number, if applicable)
- a statement that the licensee is applying for ''Commission authorization to use Section 161A preemption authority under 42 U.S.C. 2201a''
- a statement that the facility is within the interim class of facilities designated by the Commission as listed in Attachment 1 of this order
- a statement describing the reason for requesting Section 161A preemption authority. This description shall include: (1) The local, State, or Federal law (or implementing regulation) for which Section 161A preemption authority is being requested, and (2) a description of the types and calibers of weapons and ammunition feeding devices for which Section 161A preemption authority is necessary. This description must be sufficiently detailed for the NRC staff to conclude the following:

1. The licensee employs firearms or devices defined as covered weapons in accordance with the Firearms Guidelines, and are listed in Section 161A.b;

2. the identified covered weapons are used as part of the site protective strategy at a Commission-designated facility listed in Attachment 1;

3. possession, use, or access to the identified covered weapons is necessary in the discharge of official duties by security personnel who are engaged in protecting a Commission-designated facility listed in Attachment 1; and

4. other information provided by the licensee supports the need for Commission authorization consistent with the criteria in the AEA and Firearms Guidelines.

Attachment 3: Process for Conducting Firearms Background Checks

As required by Section 161A.c. of the Atomic Energy Act (AEA) of 1954, as amended (42 U.S.C. 2201a), any person who receives, possesses, transports, imports, or uses a weapon, ammunition, or a device under Section 161A.b. shall be subject to a background check by the Attorney General, based on fingerprints and including a background check under Section 103(b) of the Brady Handgun Violence Prevention Act (Pub. L. 103–159; 18 U.S.C. 922 note) to determine whether the person is prohibited from possessing or receiving a firearm under Federal or State law.

All licensees within the designated class of facilities identified in Attachment 1 shall implement the following requirements and must notify the U.S. Nuclear Regulatory Commission (NRC) in writing upon the satisfactory completion of a sufficient number of firearms background checks to staff the site security organization and continue the effective implementation of its physical protection program, specifically, its NRC-approved security plans, site protective strategy, and implementing procedures while meeting applicable fatigue requirements in Part 26 of Title 10 of the *Code of Federal Regulations* (10 CFR), ''Fitness for Duty Programs.''

1. Within 30 days after the effective date of EA–13–092, the licensee of each facility listed in Attachment 1 shall begin submitting for firearms background checks, a hard copy Federal Bureau of Investigation (FBI) Form FD–258, ''Fingerprint Card,'' for each member of the security organization whose official duties require, or will require, the possession, use, or access to any firearm.

2. Procedures for processing Form FD–258 for firearms background checks.

a. Affected licensees shall submit one completed, legible, standard fingerprint card (Form FD–258, ORIMDNRCOOOZ) for each member of the security organization who will receive, possess, transport, import, or use any firearm, weapon, ammunition, or a device.

b. Affected licensees shall submit each Form FD–258, using an appropriate method listed in 10 CFR 73.4, to the Director of the NRC's Division of Facilities and Security, Mail Stop: TWB–05B32M, marked for the attention of the Division's Criminal History Program. Copies of these forms may be obtained by writing the Office of Information Services, U.S. Nuclear Regulatory Commission, Attention: Forms Manager, Washington, DC 20555–0001; by calling 630–829–9565; or by email to *forms@nrc.gov*. The licensee shall establish procedures to ensure that the quality of the fingerprints taken results in minimizing the rejection rate of fingerprint cards due to illegible or incomplete cards.

c. The firearms background check requires both a fingerprint-based check and a name-based check through the FBI National Instant Criminal Background Check System (NICS). Because of the nature of this interim process, a hard copy FD–258 must be completed and submitted to the NRC. A hard-copy FD–258 is necessary because the format of the electronic information exchange system does not support the transfer of all required information for processing through the FBI NICS database.

d. The following information fields specified on the FBI Form FD–258 shall be completely and accurately filled-in with appropriate identifying information. Specifically, individuals must complete the following fields:

I. First name
II. last name
III. place of birth
IV. gender
V. date of birth
VI. height
VII. weight
VIII. race: (choose one of the following codes)
  - American Indian or Alaska Native
  - Asian
  - Black or African-American
  - Hispanic or Latino
  - Native Hawaiian or other Pacific Islander
  - White
IX. residence and employer addresses of person fingerprinted: Complete mailing addresses of current residence and duty station are required. (NICS check includes query of State records for disqualifying information in both State of residence and State of duty station.)
  - street number (Post Office box numbers cannot be accepted)
  - street name
  - city
  - State (required)
  - ZIP Code
X. citizenship
XI. reason fingerprinted ''Firearms Background Check (42 U.S.C. 2201a)''
XII. social security number
XIII. ORI Number: MDNRCNICZ

e. Fees for the processing of firearms background checks are due upon application. Licensees shall submit payment with the Form FD–258 for the processing of firearms background checks through corporate check,

certified check, cashier's check, money order, or electronic payment, made payable to ''U.S. NRC.'' (For guidance on making electronic payments, contact the Facility and Security Branch, Division of Facilities and Security, at 301–492–3531). Combined payment for multiple applications is acceptable. The application fee is the sum of the user fee charged by the FBI for each firearms background check or other fingerprint record submitted by the NRC on behalf of a licensee, and an administrative processing fee assessed by the NRC. The NRC processing fee covers administrative costs associated with NRC handling of licensee Form FD–258 submissions. The NRC publishes the amount of the firearms background check application fee on the NRC's public Web site. (To find the current fee amount, go to the Electronic Submittals page at *http://www.nrc.gov/site-help/e-submittals.html* and see the link for the Criminal History Program under Electronic Submission Systems.) The NRC will forward to the submitting licensee all data received from the FBI as a result of the licensee's application(s) for firearms background checks, to include the FBI fingerprint record.

f. *Right to correct and complete information.* Before making any final adverse determination, the licensee shall make available to the individual the contents of records obtained from the FBI for the purpose of assuring correct and complete information. Confirmation of receipt by the individual of this notification must be maintained by the licensee for a period of 5 years from the date of the notification. If after reviewing the record, an individual believes that it is incorrect or incomplete in any respect and wishes changes, corrections, or updating (of the alleged deficiency), or to explain any matter in the record, the individual may initiate challenge procedures. These procedures include direct application by the individual challenging the record to the agency (i.e., law enforcement agency) that contributed the questioned information or direct challenge as to the accuracy or completeness of any entry on the criminal history record to the Assistant Director, Federal Bureau of Investigation Identification Division, Washington, DC 20537–9700 as set forth in 28 CFR 16.30, ''Purpose and Scope,'' through 16.34, ''Procedure to Obtain Change, Correction or Updating of Identification Records.'' In the latter case, the FBI then forwards the challenge to the agency that submitted the data requesting that agency to verify or correct the challenged entry. Upon receipt of an official communication directly from the agency that contributed the original information, the FBI Identification Division makes any changes necessary in accordance with the information supplied by that agency. Licensees must provide at least 10 days for an individual to initiate action to challenge the results of an FBI criminal history records check after the record being made available for his/her review. The licensee may make a final adverse determination based upon the criminal history record, if applicable, only upon receipt of the FBI's confirmation or correction of the record.

3. The licensee shall retain a copy of all information submitted and received for firearms background checks for a minimum of 5 years after the information is superseded through periodic reinvestigation or the termination of an individual's access to firearms.

4. By 180 days after the effective date of EA–13–092, the licensee shall remove from any current armed duties, any individual who has not completed a satisfactory firearms background check. Additionally, no later than 180 days after the effective date of EA–13–092, licensees at the designated facilities listed in Attachment 1 shall not assign any individual to any armed duties unless the individual has completed a satisfactory firearms background check. A satisfactory firearms background check means a ''proceed'' response has been received by the licensee, from the FBI, through the NRC.

5. During the 180-day transition period after the effective date of EA–13–092, individuals who receive a ''delayed'' response from the FBI to their firearms background check may continue to have access to standard weapons as defined in the ''Guidelines on the Use of Firearms by Security Personnel in Protecting U.S. NRC-Regulated Facilities, Radioactive Material, and Other Property'' (74 FR 46800) dated September 11, 2009 (''Firearms Guidelines'') as part of their official duties not to exceed midnight of the 180th day.

6. Consistent with the NRC-approved security plans, the licensee shall remove from armed duties, without delay, any individual who has received a ''denied'' response from the FBI.

7. Licensees may return an individual to armed duties if the individual receives a ''proceed'' response from the FBI, subsequent to receiving a ''delayed'' or ''denied'' response.

8. The licensee shall provide instructions to all personnel subject to a firearms background check for appealing ''delayed'' or ''denied'' responses. An individual security officer is responsible for appealing a ''denied'' response or resolving a ''delayed'' response directly with the FBI.

9. The licensee shall revise its site training and qualification program, as needed, to provide each individual with instructions on identifying events or status that would disqualify the individual from possession or use of firearms and the continuing responsibility of each individual to promptly notify the licensee of the occurrence of any such event or status.

10. Individuals who require access to firearms shall notify the licensee's security management within 3 working days of the occurrence or existence of any disqualifying event or status. Disqualifying events or status are discussed in 27 CFR 478.32, ''Prohibited Shipment, Transportation, Possession, or Receipt of Firearms and Ammunition by Certain Persons,'' the Gun Control Act of 1968 (18 U.S.C. 922(g) and (n)), and any applicable State laws.

11. The licensee shall remove from armed duties, without delay, any individual for whom disqualifying information has become known or where a satisfactory firearms background check re-investigation has not been completed. When the individual is on duty at the time disqualifying information is received, the term ''without delay'' means that the licensee shall, beginning at the time of notification, remove the individual from armed duties and reconstitute the minimum staffing level within the timeframe specified for reconstitution of the minimum staffing levels described in the NRC-approved security plans and applicable 10 CFR Part 73, ''Physical Protection of Plants and Materials,'' requirements, or sooner if practicable.

12. The licensee shall subject all individuals who require access to firearms as part of their official duties to a periodic firearms background check re-investigation at least once every 5 years, following the initial or most recent satisfactory firearms background check. Licensees may conduct periodic firearms background checks at a period shorter than 5 years, at their discretion. Re-investigations shall be satisfactorily ''completed'' within the same calendar month as the initial or most recent firearms background check, with an allowance to midnight of the last day of the month of expiration. The licensee may continue the individual's access to firearms pending completion of the re-investigation, not to exceed midnight of the last day of the month of expiration.

13. The licensee shall complete a ''new'' firearms background check or reinvestigation for individuals who have:

a. Had a break in employment of greater than 7 consecutive calendar days (1 week) with the licensee or the licensee's security contractor. Temporary active duty in the military Reserves or National Guard is not considered to be a break in employment for the purpose of this Order and the required firearms background check.

b. Transferred to the employment of the licensee or the licensee's security contractor. A satisfactorily completed firearms background check performed by a previous employer or completed for employment within a State other than the State in which the individual will be performing armed duties, is not transferable.

14. The licensee shall notify the NRC Headquarters Operations Center by telephone within 72 hours after removing an individual from armed duties as a result of the discovery of any disqualifying status or event. Applicable telephone numbers are specified in Appendix A, ''U.S. Nuclear Regulatory Commission Offices and Classified Mailing Addresses,'' to 10 CFR Part 73. Notification timeliness shall commence from time of discovery by the licensee or the time of reporting by the individual security officer. The licensee is not required to notify the NRC if the individual security officer has disclosed the disqualifying event or status to the licensee as specified in Appendix B.4, ''Weapons Qualification and Requalification Program,'' to 10 CFR Part 73.

[FR Doc. 2013–14075 Filed 6–13–13; 8:45 am]

BILLING CODE 7590–01–P

NUCLEAR REGULATORY COMMISSION

[Docket No. 50–391; NRC–2008–0369]

Tennessee Valley Authority; Watts Bar Nuclear Plant, Unit 2

AGENCY: Nuclear Regulatory Commission.

ACTION: Final environmental statement; issuance.

SUMMARY: Notice is hereby given that the U.S. Nuclear Regulatory Commission (NRC) has published the final version of Supplement 2 to NUREG–0498, ''Final Environmental Statement, Related to the Operation of Watts Bar Nuclear Plant (WBN), Unit 2'' (SFES).

ADDRESSES: Please refer to Docket ID NRC–2008–0369 when contacting the NRC about the availability of information regarding this document. You may access information related to this document, which the NRC possesses and is publicly available, using any of the following methods:

- *Federal Rulemaking Web site:* Go to *http://www.regulations.gov* and search for Docket ID NRC–2008–0369. Address questions about NRC dockets to Carol Gallagher; telephone: 301–492–3668; email: *Carol.Gallagher@nrc.gov*. For technical questions, contact the individual(s) listed in the **FOR FURTHER INFORMATION CONTACT** section of this document.
- *NRC's Agencywide Documents Access and Management System (ADAMS):* You may access publicly-available documents online in the NRC Library at *http://www.nrc.gov/reading-rm/adams.html*. To begin the search, select ''*ADAMS Public Documents*'' and then select ''*Begin Web-based ADAMS Search.*'' For problems with ADAMS, please contact the NRC's Public Document Room (PDR) reference staff at 1–800–397–4209, 301–415–4737, or by email to *pdr.resource@nrc.gov.* The ADAMS accession number for Supplement 2 to NUREG–0498 is ML13144A202. The ADAMS accession number for each document referenced in this notice (if that document is available in ADAMS) is provided the first time that a document is referenced.
- *NRC's PDR:* You may examine and purchase copies of public documents at the NRC's PDR, Room O1–F21, One White Flint North, 11555 Rockville Pike, Rockville, Maryland 20852.

FOR FURTHER INFORMATION CONTACT: Elaine N. Keegan, Office of Nuclear Reactor Regulation, U.S. Nuclear Regulatory Commission, Washington, DC 20555–0001; telephone: 301–415–8517; email: *Elaine.Keegan@nrc.gov*.

SUPPLEMENTARY INFORMATION: The Tennessee Valley Authority (TVA or the applicant) submitted its Final Supplemental Environmental Impact Statement for the Completion and Operation of WBN Unit 2 (June 2007), (FSEIS) by letter dated February 15, 2008 (ADAMS Accession No. ML080510469), pursuant to Part 51 of Title 10 of the *Code of the Federal Regulations* (10 CFR).

On June 30, 1976, TVA submitted an application for an operating license for WBN Unit 2, pursuant to 10 CFR Part 50. An updated operating license application was submitted on March 4, 2009. The proposed action in response to the updated application is the issuance of an operating license that would authorize TVA to possess, use, and operate a second light-water nuclear reactor (the facility), WBN Unit 2, located on the applicant's site in Rhea County, Tennessee. The WBN Unit 2 would operate at a steady-state power level of 3411 megawatts thermal.

A notice of receipt and availability of the updated application, which included the FSEIS, was published in the **Federal Register** on May 1, 2009 (74 FR 20350). A notice of intent to prepare a supplement to the final environmental statement, which was prepared and published in 1978 and to conduct the scoping process was published in the **Federal Register** on September 11, 2009 (74 FR 46799). On October 6, 2009, the NRC held two scoping meetings in Sweetwater, Tennessee, to obtain public input on the scope of the environmental review. The NRC also solicited comments from Federal, State, Tribal, regional, and local agencies.

The draft SFES was published in October 2011 (ADAMS Accession No. ML112980199). The U.S. Environmental Protection Agency Notice of Filing in the **Federal Register** (76 FR 70130) indicated a 75-day comment period, commencing on November 10, 2011, to allow members of the public to comment on the results of the NRC staff's review. This was amended in the **Federal Register** on November 18, 2011, to a 45-day comment period (76 FR 71560). On December 8, 2011, two public meetings were held in Sweetwater, Tennessee. At the meetings, the NRC staff described the results of the NRC environmental review, answered questions related to the review, and provided members of the public with information to assist them in formulating their comments. Based on comments received at the public meetings, the comment period was extended by the NRC to January 24, 2012 (76 FR 80409). When the comment period ended on January 24, 2012, the NRC staff considered and addressed all the comments received.

As discussed in the Section 9.6 of the supplement, the NRC staff's recommendation to the Commission related to the environmental aspects of the proposed action is that environmental impacts are not great enough to deny the option of issuing the operating license for Watts Bar Nuclear Plant, Unit 2. This recommendation is based on (1) the application, including the February 15, 2008, final Environmental Impact Statement submitted by TVA as the Environmental Report, and responses to staff requests for additional information submitted by TVA; (2) the NRC staff's review conducted for the 1978 Final Environmental Statement to support the Operating License (FES–OL); (3)

consultation with Federal, State, Tribal, and local agencies; (4) the NRC staff's own independent review of information available since the preparation and publication of the 1978 FES–OL; and (5) the assessments summarized in this SFES, including consideration of public comments received during scoping and on the draft SFES.

Dated at Rockville, Maryland, this 6th day of June 2013.

For the Nuclear Regulatory Commission.

Robert J. Pascarelli,

Chief, Plant Licensing Branch II–1, Division of Operating Reactor Licensing, Office of Nuclear Reactor Regulation.

[FR Doc. 2013–14088 Filed 6–13–13; 8:45 am]

BILLING CODE 7590–01–P

NUCLEAR REGULATORY COMMISSION

[NRC–2013–0128]

All Operating Boiling-Water Reactor Licensees With Mark I And Mark II Containments; Docket Nos. (As Shown In Attachment 1), License Nos. (As Shown In Attachment 1), EA–13–109; Order Modifying Licenses With Regard to Reliable Hardened Containment Vents Capable of Operation Under Severe Accident Conditions (Effective Immediately)

I.

The Licensees identified in Attachment 1 to this Order hold licenses issued by the U.S. Nuclear Regulatory Commission (NRC) authorizing operation of nuclear power plants in accordance with the Atomic Energy Act of 1954, as amended, and Part 50 of Title 10 of the *Code of Federal Regulations* (10 CFR), ''Domestic Licensing of Production and Utilization Facilities.'' Specifically, these Licensees operate boiling-water reactors (BWRs) with Mark I and Mark II containment designs.

II.

The events at the Fukushima Dai-ichi nuclear power plant following the March 2011 earthquake and tsunami highlight the possibility that events such as rare natural phenomena could challenge the traditional defense-in-depth protections related to preventing accidents, mitigating accidents to prevent the release of radioactive materials, and taking actions to protect the public should a release occur. At Fukushima Dai-ichi, limitations in time and unpredictable conditions associated with the accident significantly hindered attempts by the operators to prevent core damage and containment failure. In particular, the operators were unable to successfully operate the containment venting system. These problems, with venting the containments under the challenging conditions following the tsunami, contributed to the progression of the accident from inadequate cooling of the core leading to core damage, to compromising containment functions from overpressure and over-temperature conditions, and to the hydrogen explosions that destroyed the reactor buildings (secondary containments) of three of the Fukushima Dai-ichi units. The loss of the various barriers led to the release of radioactive materials, which further hampered operator efforts to arrest the accidents and ultimately led to the contamination of large areas surrounding the plant. Fortunately, the evacuation of local populations minimized the immediate danger to public health and safety from the loss of control of the large amount of radioactive materials within the reactor cores.

The events at Fukushima reinforced the importance of reliable operation of hardened containment vents during emergency conditions, particularly, for small containments such as the Mark I and Mark II designs. On March 12, 2012, the NRC issued Order EA–12–050 [1] requiring the Licensees identified in Attachment 1 to this Order to implement requirements for a reliable hardened containment venting system (HCVS) for Mark I and Mark II containments. Order EA–12–050 required licensees of BWR facilities with Mark I and Mark II containments to install a reliable HCVS to support strategies for controlling containment pressure and preventing core damage following an event that causes a loss of heat removal systems (e.g., an extended loss of electrical power). The NRC determined that the issuance of EA–12–050 and implementation of the requirements of that Order were necessary to provide reasonable assurance of adequate protection of the public health and safety.

While developing the requirements for a reliable HCVS in EA–12–050, the NRC acknowledged that questions remained about maintaining containment integrity and limiting the release of radioactive materials if the venting systems were used during severe accident conditions. The NRC staff presented options to address these issues, including the possible use of engineered filters to control releases, for Commission consideration in SECY–12–0157, ''Consideration of Additional Requirements for Containment Venting Systems for Boiling Water Reactors with Mark I and Mark II Containments'' (November 26, 2012). Option 2 in SECY–12–0157 was to modify EA–12–050 to require severe accident capable vents (i.e., a reliable HCVS capable of operating under severe accident conditions). Other options discussed in SECY–12–0157 included the installation of engineered filtered containment venting systems (Option 3) and the development of a severe accident confinement strategy (Option 4). In the Staff Requirements Memorandum (SRM) for SECY–12–0157, dated March 19, 2013, the Commission approved Option 2 and directed the staff to issue a modification to EA–12–050 requiring licensees subject to that Order to ''upgrade or replace the reliable hardened vents required by Order EA–12–050 with a containment venting system designed and installed to remain functional during severe accident conditions.''

The requirements in this Order, in addition to providing a reliable HCVS to assist in preventing core damage when heat removal capability is lost (the purpose of EA–12–050), will ensure that venting functions are also available during severe accident conditions. Severe accident conditions include the elevated temperatures, pressures, radiation levels, and combustible gas concentrations, such as hydrogen and carbon monoxide, associated with accidents involving extensive core damage, including accidents involving a breach of the reactor vessel by molten core debris.

Ensuring that the venting functions are available under severe accident conditions will support the strategies in the Mark I and Mark II severe accident management guidelines for the protection or recovery of the containment, which serves as a barrier to the release of radioactive materials. This Order will ensure that this additional severe accident venting capability is provided while also achieving, with minimal delays, the purpose of EA–12–050—to provide a reliable HCVS to control containment pressure and prevent core damage following the loss of heat removal functions.

This Order rescinds the requirements imposed in Section IV and Attachment 2 of EA–12–050 and replaces them with the requirements in Section IV and Attachment 2 of this Order. Because the requirements in EA–12–050 are now reflected in this Order, licensees are no longer expected to comply with the

[1] ''Order Modifying Licenses With Regard To Reliable Hardened Containment Vents (Effective Immediately),'' EA–12–050 (March 12, 2012) (ADAMS Accession No. ML12056A043).

requirements in EA–12–050, including applicable schedule deadlines for submittals or implementation.

This Order defines requirements related to containment venting before and during severe accident conditions, which is a subset of the issues related to containment performance during severe accidents outlined in SECY–12–0157. Other issues include improving licensees' severe accident management capabilities and filtering strategies to limit the release of radioactive materials when venting is necessary. For example, the importance of drywell flooding to prevent core debris that has breached the reactor vessel from causing containment failure by drywell liner melt-through in Mark I containments was discussed in SECY–12–0157 and during the related Commission meeting held on January 9, 2013. The remaining issues related to filtering strategies and severe accident management of BWR Mark I and II containments will be addressed through the rulemaking process, as directed by the Commission in its SRM for SECY–12–0157. The rulemaking process will commence in June 2013 when the NRC staff begins a series of public meetings to support developing the regulatory basis for the proposed rulemaking.

III.

The purpose of requiring reliable hardened vents in EA–12–050 was to prevent core damage when heat removal capability is lost due to conditions such as an extended loss of electrical power. In EA–12–050, the Commission determined that, in light of the events at Fukushima Dai-ichi and consistent with the NRC's defense-in-depth strategy, installation of reliable hardened containment vents to help prevent core damage in BWRs with Mark I and Mark II containments was necessary to provide reasonable assurance of adequate protection of public health and safety.

This Order requires installation of reliable hardened vents that will not only assist in preventing core damage when heat removal capability is lost, but will also function in severe accident conditions (i.e., when core damage has occurred). The safety improvements to Mark I and Mark II containment venting systems required by this Order are intended to increase confidence in maintaining the containment function following core damage events. Although venting the containment during severe accident conditions could result in the release of radioactive materials, venting could also prevent containment structural and gross penetration leakage failures due to overpressurization that would hamper accident management (e.g., continuing efforts to cool core debris) and ultimately result in larger, uncontrolled releases of radioactive material.

Under the backfit provisions of 10 CFR 50.109, ''Backfitting,'' the NRC may require plant improvements beyond those needed to provide reasonable assurance of adequate protection of public health and safety when engineering approaches are available to provide a cost-justified substantial safety improvement. The staff performed a detailed regulatory analysis of possible improvements to Mark I and Mark II reliable hardened containment vents, including the option of installing severe accident capable vents. That analysis is available in the NRC's Agencywide Documents Access and Management System (ADAMS) at Accession No. ML12312A456. A summary of the staff's cost-benefit evaluation was provided in SECY–12–0157.

As discussed in SECY–12–0157, the NRC's determination that a venting system should be available during severe accident conditions considered both quantitative assessments of costs and benefits, as well as, various qualitative factors. Among the qualitative factors, one of the more important is enhancing the defense-in-depth characteristics of Mark I and Mark II containments by addressing the relatively high probabilities that those containments would fail should an accident progress to melting the core. Other qualitative factors supporting installation of severe accident capable vents include addressing uncertainties in the understanding of severe accident events, supporting severe accident management and response, improving the control of hydrogen generated during severe accidents, improving readiness for external and multi-unit events, and reducing uncertainties about radiological releases and thereby improving emergency planning and response. The installation of a reliable, severe accident capable containment venting system, in combination with other actions such as ensuring drywell flooding capabilities, reduces the likelihood of containment failures and thereby enhances the defense-in-depth protections for plants with Mark I and Mark II containments.

The Commission has determined that requiring BWR facilities with Mark I and Mark II containments to make the necessary plant modifications and procedure changes to provide a reliable hardened venting system that is capable of performing under severe accident conditions is a cost-justified substantial safety improvement. These modifications are needed to protect health and to minimize danger to life or property because they will give licensees greater capabilities to respond to severe accidents and limit the uncontrolled release of radioactive materials. In such situations, the Commission may act in accordance with its statutory authority under Section 161 of the Atomic Energy Act of 1954, as amended, to require Licensees to take appropriate action to reduce the risks posed to the public from the operation of nuclear power plants.

For Mark I containments, the preferred venting path is from the wetwell portion of containment because the water in the suppression pool provides a degree of decontamination before release to the environment. The benefits of the suppression pool in the scrubbing of possible releases when using the wetwell vents for pressure control were described in Generic Letter 89–16, ''Installation of a Hardened Wetwell Vent.'' In addition, the wetwell venting path has been incorporated into other parts of the mitigating strategies to address lessons learned from the Fukushima Dai-ichi accident. During severe accidents involving molten core debris breaching the reactor vessel, mitigating strategies include injecting water into the containment to help prevent drywell liner melt-through, which would result in a release pathway directly into the reactor building. However, water injection can eventually increase the water level in the suppression pool to a point where venting from the wetwell would no longer be possible. Without venting, containment pressure would continue to increase, threatening containment failure. For this reason, current severe accident management guidelines for Mark I containments include provisions for venting from the drywell for containment pressure control if the capability of venting from the wetwell is not available. Because water injection in Mark II containments could similarly impede the ability to vent from the wetwell, the Mark II severe accident management guidelines also currently include provisions for use of both wetwell and drywell containment vents.

In general, wetwell venting for Mark II containments provides similar benefits to Mark I containments in terms of scrubbing of possible releases. However, for Mark II containments, in the unlikely event of core debris melting through the reactor vessel, there is a potential for the core debris to cause a failure of drain line or downcomer pipe penetration in the floor, resulting in direct communication between the

drywell and the wetwell volume above the water in the suppression pool. This condition, which is referred to as suppression pool bypass, is described in more detail in SECY–12–0157. In a suppression pool bypass scenario, the primary concern is the loss of the suppression pool as a means of filtering the release from the vents. This loss of filtering capability is an issue that will be resolved as part of the NRC rulemaking addressing broader severe accident management and filtering strategies, previously described.

For the reasons discussed above, this Order requires Mark I and Mark II containments to have a wetwell venting system that remains functional during severe accident conditions. This Order also requires licensees with Mark I and Mark II containments to either install a severe accident capable drywell venting system or develop and implement a reliable containment venting strategy that makes it unlikely that a licensee would need to vent from the containment drywell during severe accident conditions. Although not required by this Order, licensees with Mark II containments may propose to provide the necessary containment venting capability and resolve concerns about suppression pool bypass scenarios by developing alternate approaches such as the installation of a containment drywell vent with an installed engineered filter. Licensees wishing to propose this or other alternatives may do so by requesting relaxation in accordance with Section IV of this Order.

In recognition of the relative importance of venting capabilities from the wetwell and drywell, a phased approach to implementation is being used to minimize delays in implementing the requirements originally imposed by EA–12–050. Phase 1 involves upgrading the venting capabilities from the containment wetwell to provide reliable, severe accident capable hardened vents to assist in preventing core damage and, if necessary, to provide venting capability during severe accident conditions. Phase 2 involves providing additional protections for severe accident conditions through installation of a reliable, severe accident capable drywell vent system or the development of a reliable containment venting strategy that makes it unlikely that a licensee would need to vent from the containment drywell during severe accident conditions.

Following the issuance of this Order, the NRC staff will work with stakeholders to develop detailed guidance on specific capabilities and other aspects of implementing the requirements defined in Attachment 2 to this Order within the schedules defined in Section IV of this Order. This guidance will more fully define functional requirements (e.g., equipment specifications) as well as acceptable approaches to technical requirements such as designing the containment venting system to minimize the reliance on operator actions. The NRC anticipates issuing the final interim staff guidance (ISG) for Phase 1 of this Order by October 31, 2013, to support licensees preparing and submitting integrated plans in accordance with the schedule defined in Section IV. The NRC staff plans to subsequently review the integrated plans and document those reviews in safety evaluations. The NRC anticipates issuing the final ISG for Phase 2 of this Order by April 30, 2015, to support licensees preparing and submitting integrated plans related to the installation of severe accident containment drywell vents or implementing a reliable containment venting strategy that makes it unlikely that a licensee would need to vent from the containment drywell during severe accident conditions.

The NRC has concluded that (1) the requirement to provide a reliable HCVS to prevent or limit core damage upon loss of heat removal capability is necessary to ensure reasonable assurance of adequate protection of public health and safety, and (2) the requirement that the reliable HCVS remain functional during severe accident conditions is a cost-justified substantial safety improvement under 10 CFR 50.109(a)(3). The NRC is therefore requiring Licensee actions. In addition, pursuant to 10 CFR 2.202, the NRC finds that the public health, safety and interest require that this Order be made immediately effective.

IV.

Accordingly, pursuant to Sections 161b, 161i, 161o, and 182 of the Atomic Energy Act of 1954, as amended, and the Commission's regulations in 10 CFR 2.202, ''Orders,'' and 10 CFR Part 50, *it is hereby ordered, effective immediately, that all licenses identified in attachment 1 to this order are modified as follows:*

A. The requirements in Section IV and Attachment 2 of EA–12–050 are hereby rescinded. Licensees are no longer required to comply with those requirements.

B. All Licensees shall, notwithstanding the provisions of any Commission regulation or license to the contrary, comply with the requirements described in Attachment 2 to this Order except to the extent that a more stringent requirement is set forth in the license. These Licensees shall promptly start implementation of the requirements in Attachment 2 to this Order upon issuance of the associated final interim staff guidance (ISG) for each phase, and shall complete the two phases of implementation by the following dates:

- Phase 1 (severe accident capable wetwell venting system): No later than startup from the second refueling outage that begins after June 30, 2014, or June 30, 2018, whichever comes first.
- Phase 2, (severe accident capable drywell venting system): No later than startup from the first refueling outage that begins after June 30, 2017, or June 30, 2019, whichever comes first.

C. 1. All Licensees shall, within twenty (20) days of the issuance date of the final ISG for Phase 1, notify the Commission (1) if they are unable to comply with any of the Phase 1 requirements described in Attachment 2, (2) if compliance with any of the Phase 1 requirements is unnecessary in their specific circumstances, or (3) if implementation of any of the Phase 1 requirements would cause the Licensee to be in violation of the provisions of any Commission regulation or the facility license. The notification shall provide the Licensee's justification for seeking relief from or variation of any specific requirement.

2. Any Licensee that considers that implementation of any of the Phase 1 requirements described in Attachment 2 would adversely affect the safe and secure operation of the facility must notify the Commission, within twenty (20) days of the issuance date of the final ISG for Phase 1, of the adverse safety impact, the basis for the Licensee's determination that the requirement has an adverse safety impact, and either a proposal for achieving the same objectives specified in the requirement in question, or a schedule for modifying the facility to address the adverse safety condition. If neither approach is appropriate, the Licensee must supplement its response to Condition C.1 of this Order to identify the condition as a requirement with which it cannot comply, with attendant justifications as required in Condition C.1.

3. All licensees shall, within twenty (20) days of the issuance date of the final ISG for Phase 2, notify the Commission (1) if they are unable to comply with any of the Phase 2 requirements described in Attachment 2, (2) if compliance with any of the Phase 2 requirements is unnecessary in their specific circumstances, or (3) if

implementation of any of the Phase 2 requirements would cause the Licensee to be in violation of the provisions of any Commission regulation or the facility license. The notification shall provide the Licensee's justification for seeking relief from or variation of any specific requirement.

4. Any Licensee that considers that implementation of any of the Phase 2 requirements described in Attachment 2 would adversely affect the safe and secure operation of the facility must notify the Commission, within twenty (20) days of the issuance date of the final ISG for Phase 2, of the adverse safety impact, the basis for the Licensee's determination that the requirement has an adverse safety impact, and either a proposal for achieving the same objectives specified in the requirement in question, or a schedule for modifying the facility to address the adverse safety condition. If neither approach is appropriate, the Licensee must supplement its response to Condition C.3 of this Order to identify the condition as a requirement with which it cannot comply, with attendant justifications as required in Condition C.3.

D. 1. All Licensees shall, by June 30, 2014, submit to the Commission for review an overall integrated plan including a description of how compliance with the Phase 1 requirements described in Attachment 2 will be achieved.

2. All Licensees shall, by December 31, 2015, submit to the Commission for review an overall integrated plan including a description of their approach to the Phase 2 requirements described in Attachment 2 and how compliance will be achieved within the required schedule.

3. All Licensees shall provide status reports at six (6)-month intervals following submittal of the Phase 1 integrated plan, as required in Condition D.1, which delineates progress made in implementing the requirements of this Order.

4. All Licensees shall report to the Commission when full compliance with the requirements for Phase 1 and Phase 2, as described in Attachment 2, are achieved.

Licensee responses to Conditions C.1, C.2, C.3, C.4, D.1, D.2, D.3 and D.4 above shall be submitted in accordance with 10 CFR 50.4, ''Written Communications.'' The Director, Office of Nuclear Reactor Regulation may, in writing, relax or rescind any of the above conditions upon demonstration by the Licensee of good cause.

V.

In accordance with 10 CFR 2.202, the Licensee must, and any other person adversely affected by this Order may, submit an answer to this Order, and may request a hearing on this Order, within twenty (20) days of the date of this Order. Where good cause is shown, consideration will be given to extending the time to answer or to request a hearing. A request for extension of time in which to submit an answer or request a hearing must be made in writing to the Director, Office of Nuclear Reactor Regulation, U.S. Nuclear Regulatory Commission, Washington, DC 20555, and include a statement of good cause for the extension. The answer may consent to this Order. Licensees that consent to this Order and waive their right to a hearing pursuant to 10 CFR 2.202(d) may submit their answers in accordance with 10 CFR 50.4 instead of following the requirements of the NRC E-filing Rule described below.

If a hearing is requested by a Licensee or a person whose interest is adversely affected, the Commission will issue an Order designating the time and place of any hearings. If a hearing is held, the issue to be considered at such hearing shall be whether this Order should be sustained. Pursuant to 10 CFR 2.202(c)(2)(i), the licensee or any other person adversely affected by this Order, may, in addition to demanding a hearing, at the time the answer is filed or sooner, move the presiding officer to set aside the immediate effectiveness of the Order on the ground that the Order, including the need for immediate effectiveness, is not based on adequate evidence but on mere suspicion, unfounded allegations, or error.

All documents filed in NRC adjudicatory proceedings, including a request for hearing, a petition for leave to intervene, any motion or other document filed in the proceeding prior to the submission of a request for hearing or petition to intervene, and documents filed by interested governmental entities participating under 10 CFR 2.315(c), must be filed in accordance with the NRC E-Filing rule (72 FR 49139; August 28, 2007). The E-Filing process requires participants to submit and serve all adjudicatory documents over the internet, or in some cases to mail copies on electronic storage media. Participants may not submit paper copies of their filings unless they seek an exemption in accordance with the procedures described below.

To comply with the procedural requirements of E-Filing, at least 10 days prior to the filing deadline, the participant must contact the Office of the Secretary by email at *hearing.docket@nrc.gov,* or by telephone at 301–415–1677, to (1) request a digital identification (ID) certificate, which allows the participant (or its counsel or representative) to digitally sign documents and access the E-Submittal server for any NRC proceeding in which it is participating; and (2) advise the Secretary that the participant will be submitting a request or petition for hearing (even in instances in which the participant, or its counsel or representative, already holds an NRC-issued digital ID certificate). Based upon this information, the Secretary will establish an electronic docket for the hearing in this proceeding if the Secretary has not already established an electronic docket.

Information about applying for a digital ID certificate is available on NRC's public Web site at *http://www.nrc.gov/site-help/e-submittals/apply-certificates.html.* System requirements for accessing the E-Submittal server are detailed in NRC's ''Guidance for Electronic Submissions,'' which is available on the NRC's public Web site at *http://www.nrc.gov/site-help/electronic-sub-ref-mat.html.* Participants may attempt to use other software not listed on the Web site, but should note that the NRC's E-Filing system does not support unlisted software, and the NRC Meta System Help Desk will not be able to offer assistance in using unlisted software.

If a participant is electronically submitting a document to the NRC in accordance with the E-Filing rule, the participant must file the document using the NRC's online, Web-based submission form. In order to serve documents through the Electronic Information Exchange System, users will be required to install a Web browser plug-in from the NRC's Web site. Further information on the Web-based submission form, including the installation of the Web browser plug-in, is available on the NRC's public Web site at *http://www.nrc.gov/site-help/e-submittals.html.*

Once a participant has obtained a digital ID certificate and a docket has been created, the participant can then submit a request for hearing or petition for leave to intervene. Submissions should be in Portable Document Format (PDF) in accordance with NRC guidance available on the NRC's public Web site at *http://www.nrc.gov/site-help/e-submittals.html.* A filing is considered complete at the time the documents are submitted through the NRC's E-Filing system. To be timely, an electronic filing must be submitted to the E-Filing

system no later than 11:59 p.m. Eastern Time on the due date. Upon receipt of a transmission, the E-Filing system time-stamps the document and sends the submitter an email notice confirming receipt of the document. The E-Filing system also distributes an email notice that provides access to the document to the NRC's Office of the General Counsel and any others who have advised the Office of the Secretary that they wish to participate in the proceeding, so that the filer need not serve the documents on those participants separately. Therefore, applicants and other participants (or their counsel or representative) must apply for and receive a digital ID certificate before a hearing request/petition to intervene is filed so that they can obtain access to the document via the E-Filing system.

A person filing electronically using the NRC's adjudicatory E-Filing system may seek assistance by contacting the NRC Meta System Help Desk through the ''Contact Us'' link located on the NRC's Web site at *http://www.nrc.gov/site-help/e-submittals.html,* by email at *MSHD.Resource@nrc.gov,* or by a toll-free call to1–866–672–7640. The NRC Meta System Help Desk is available between 8 a.m. and 8 p.m., Eastern Time, Monday through Friday, excluding government holidays.

Participants who believe that they have good cause for not submitting documents electronically must file an exemption request, in accordance with 10 CFR 2.302(g), with their initial paper filing requesting authorization to continue to submit documents in paper format. Such filings must be submitted by: (1) First class mail addressed to the Office of the Secretary of the Commission, U.S. Nuclear Regulatory Commission, Washington, DC 20555–0001, Attention: Rulemaking and Adjudications Staff; or (2) courier, express mail, or expedited delivery service to the Office of the Secretary, Sixteenth Floor, One White Flint North, 11555 Rockville Pike, Rockville, Maryland, 20852, Attention: Rulemaking and Adjudications Staff. Participants filing a document in this manner are responsible for serving the document on all other participants. Filing is considered complete by first-class mail as of the time of deposit in the mail, or by courier, express mail, or expedited delivery service upon depositing the document with the provider of the service. A presiding officer, having granted an exemption request from using E-Filing, may require a participant or party to use E-Filing if the presiding officer subsequently determines that the reason for granting the exemption from use of E-Filing no longer exists.

Documents submitted in adjudicatory proceedings will appear in the NRC's electronic hearing docket, which is available to the public at *http://ehd1.nrc.gov/ehd/,* unless excluded pursuant to an order of the Commission or the presiding officer. Participants are requested not to include personal privacy information, such as social security numbers, home addresses, or home phone numbers in their filings, unless an NRC regulation or other law requires submission of such information. With respect to copyrighted works, except for limited excerpts that serve the purpose of the adjudicatory filings and would constitute a Fair Use application, participants are requested not to include copyrighted materials in their submission.

In the absence of any request for hearing, or written approval of an extension of time in which to request a hearing, the provisions specified in Section IV above shall be final twenty (20) days from the date of this Order without further order or proceedings. If an extension of time for requesting a hearing has been approved, the provisions specified in Section IV shall be final when the extension expires if a hearing request has not been received. *An answer or a request for hearing shall not stay the immediate effectiveness of this order.*

For the Nuclear Regulatory Commission.

Dated this 6th day of June, 2013.

Eric J. Leeds,

Director, Office of Nuclear Reactor Regulation.

ATTACHMENT 1: OPERATING BOILING-WATER REACTOR LICENSES WITH MARK I AND MARK II CONTAINMENTS

Browns Ferry Nuclear Plant, Units 1, 2, and 3	BWR-Mark I.
Brunswick Steam Electric Plant, Units 1 and 2	BWR-Mark I.
Columbia Generating Station	BWR-Mark II.
Cooper Nuclear Station	BWR-Mark I.
Dresden Nuclear Power Station, Units 2 and 3	BWR-Mark I.
Duane Arnold Energy Center	BWR-Mark I.
Edwin I. Hatch Nuclear Plant, Units 1 and 2	BWR-Mark I.
Fermi	BWR-Mark I.
Hope Creek Generating Station	BWR-Mark I.
James A. FitzPatrick Nuclear Power Plant	BWR-Mark I.
LaSalle County Station, Units 1 and 2	BWR-Mark II.
Limerick Generating Station, Units 1 and 2	BWR-Mark II.
Monticello Nuclear Generating Plant	BWR-Mark I.
Nine Mile Point Nuclear Station, Units 1 and 2	BWR-Mark I & II.
Oyster Creek Nuclear Generating Station	BWR-Mark I.
Peach Bottom Atomic Power Station, Units 2 and 3	BWR-Mark I.
Pilgrim Nuclear Power Station	BWR-Mark I.
Quad Cities Nuclear Power Station, Units 1 and 2	BWR-Mark I.
Susquehanna Steam Electric Station, Units 1 and 2	BWR-Mark II.
Vermont Yankee Nuclear Power Station	BWR-Mark I.

Attachment 2: Requirements for Reliable Hardened Vent Systems Capable of Operation Under Severe Accident Conditions at Boiling-Water Reactor Facilities With Mark I and Mark II Containments

Boiling-Water Reactors (BWRs) with Mark I and Mark II containments shall have a reliable, severe accident capable hardened containment venting system (HCVS)[2]. This requirement shall be implemented in two phases. In Phase 1, licensees of BWRs with Mark I and Mark II containments shall design and install a venting system that provides venting capability from the wetwell during severe accident conditions. Severe accident conditions include the elevated temperatures, pressures, radiation levels, and combustible gas concentrations, such as hydrogen and carbon monoxide, associated with accidents involving extensive core damage, including accidents involving a breach of the reactor vessel by molten core debris. In Phase 2, licensees of BWRs with Mark I and Mark II containments shall design and install a venting system that provides venting capability from the drywell under severe accident conditions, or, alternatively, those licensees shall develop and implement a reliable containment venting strategy that makes it unlikely that a licensee would need to vent from the containment drywell during severe accident conditions.

A. PHASE 1 (Reliable, Severe Accident Capable Wetwell Venting System)

The BWRs with Mark I and Mark II containments shall design and install a HCVS, using a vent path from the containment wetwell to remove decay heat, vent the containment atmosphere (including steam, hydrogen, carbon monoxide, non-condensable gases, aerosols, and fission products), and control containment pressure within acceptable limits. The HCVS shall be designed for those accident conditions (before and after core damage) for which containment venting is relied upon to reduce the probability of containment failure, including accident sequences that result in the loss of active containment heat removal capability or extended loss of alternating current (AC) power. The HCVS shall meet the requirements in Sections 1, 2, and 3, below.

[2] Unless otherwise specified in this attachment, HCVS refers to a reliable, severe accident capable hardened containment venting system. The HCVS includes a severe accident capable containment wetwell venting system and may also, depending on the approach taken for Phase 2, include a severe accident capable containment drywell venting system.

1. HCVS Functional Requirements

1.1 The design of the HCVS shall consider the following performance objectives:

1.1.1 The HCVS shall be designed to minimize the reliance on operator actions.

1.1.2 The HCVS shall be designed to minimize plant operators' exposure to occupational hazards, such as extreme heat stress, while operating the HCVS system.

1.1.3 The HCVS shall also be designed to account for radiological conditions that would impede personnel actions needed for event response.

1.1.4 The HCVS controls and indications shall be accessible and functional under a range of plant conditions, including severe accident conditions, extended loss of AC power, and inadequate containment cooling.

1.2 The HCVS shall include the following design features:

1.2.1 The HCVS shall have the capacity to vent the steam/energy equivalent of one (1) percent of licensed/rated thermal power (unless a lower value is justified by analyses), and be able to restore and then maintain containment pressure below the primary containment design pressure and the primary containment pressure limit.

1.2.2 The HCVS shall discharge the effluent to a release point above main plant structures.

1.2.3 The HCVS shall include design features to minimize unintended cross flow of vented fluids within a unit and between units on the site.

1.2.4 The HCVS shall be designed to be manually operated during sustained operations from a control panel located in the main control room or a remote but readily accessible location.[3]

1.2.5 The HCVS shall, in addition to meeting the requirements of 1.2.4, be capable of manual operation (e.g., reach-rod with hand wheel or manual operation of pneumatic supply valves from a shielded location), which is accessible to plant operators during sustained operations.

1.2.6 The HCVS shall be capable of operating with dedicated and permanently installed equipment for at least 24 hours following the loss of normal power or loss of normal pneumatic supplies to air operated components during an extended loss of AC power.

[3] For the purposes of these technical requirements, ''sustained operations'' means until such time that alternate reliable containment heat removal and pressure control is reestablished, independent of the HCVS, (e.g., suppression pool, torus, or shutdown cooling) using installed or portable equipment.

1.2.7 The HCVS shall include means to prevent inadvertent actuation.

1.2.8 The HCVS shall include means to monitor the status of the vent system (e.g., valve position indication) from the control panel required by 1.2.4. The monitoring system shall be designed for sustained operation during an extended loss of AC power.

1.2.9 The HCVS shall include a means to monitor the effluent discharge for radioactivity that may be released from operation of the HCVS. The monitoring system shall provide indication from the control panel required by 1.2.4 and shall be designed for sustained operation during an extended loss of AC power.

1.2.10 The HCVS shall be designed to withstand and remain functional during severe accident conditions, including containment pressure, temperature, and radiation while venting steam, hydrogen, and other non-condensable gases and aerosols. The design is not required to exceed the current capability of the limiting containment components.

1.2.11 The HCVS shall be designed and operated to ensure the flammability limits of gases passing through the system are not reached; otherwise, the system shall be designed to withstand dynamic loading resulting from hydrogen deflagration and detonation.

1.2.12 The HCVS shall be designed to minimize the potential for hydrogen gas migration and ingress into the reactor building or other buildings.

1.2.13 The HCVS shall include features and provisions for the operation, testing, inspection and maintenance adequate to ensure that reliable function and capability are maintained.

2. HCVS Quality Standards

The HCVS shall meet the following quality standards:

2.1 The HCVS vent path up to and including the second containment isolation barrier shall be designed consistent with the design basis of the plant. Items in this path include piping, piping supports, containment isolation valves, containment isolation valve actuators and containment isolation valve position indication components.

2.2 All other HCVS components shall be designed for reliable and rugged performance that is capable of ensuring HCVS functionality following a seismic event. These items include electrical power supply, valve actuator pneumatic supply and instrumentation (local and remote) components.

3. HCVS Programmatic Requirements

3.1 The Licensee shall develop, implement, and maintain procedures necessary for the safe operation of the HCVS. Procedures shall be established for system operations when normal and backup power is available, and during an extended loss of AC power.

3.2 The Licensee shall train appropriate personnel in the use of the HCVS. The training curricula shall include system operations when normal and backup power is available, and during an extended loss of AC power.

B. PHASE 2 (Reliable, Severe Accident Capable Drywell Venting System)

Licensees with BWRs with Mark I and Mark II containments shall either:

(1) Design and install a HCVS, using a vent path from the containment drywell, that meets the requirements in Section B.1 below, or

(2) develop and implement a reliable containment venting strategy that makes it unlikely that a licensee would need to vent from the containment drywell before alternate reliable containment heat removal and pressure control is reestablished and meets the requirements in Section B.2 below.

1. HCVS Drywell Vent Functional Requirements

1.1 The drywell venting system shall be designed to vent the containment atmosphere (including steam, hydrogen, non-condensable gases, aerosols, and fission products), and control containment pressure within acceptable limits during severe accident conditions.

1.2 The same functional requirements (reflecting accident conditions in the drywell), quality requirements, and programmatic requirements defined in Section A of this Attachment for the wetwell venting system shall also apply to the drywell venting system.

2. Containment Venting Strategy Requirements

Licensees choosing to develop and implement a reliable containment venting strategy that does not require a reliable, severe accident capable drywell venting system shall meet the following requirements:

2.1 The strategy making it unlikely that a licensee would need to vent from the containment drywell during severe accident conditions shall be part of the overall accident management plan for Mark I and Mark II containments.

2.2 The licensee shall provide supporting documentation demonstrating that containment failure as a result of overpressure can be prevented without a drywell vent during severe accident conditions.

2.3 Implementation of the strategy shall include licensees preparing the necessary procedures, defining and fulfilling functional requirements for installed or portable equipment (e.g., pumps and valves), and installing the needed instrumentation.

[FR Doc. 2013–14072 Filed 6–13–13; 8:45 am]

BILLING CODE 7590–01–P

SECURITIES AND EXCHANGE COMMISSION

[Release No. 34–69725; File No. SR–EDGX–2013–19]

Self-Regulatory Organizations; EDGX Exchange, Inc.; Notice of Filing and Immediate Effectiveness of Proposed Rule Change Relating to Amendments to the EDGX Exchange, Inc. Fee Schedule

June 10, 2013.

Pursuant to Section 19(b)(1) of the Securities Exchange Act of 1934 (the ''Act''),[1] and Rule 19b–4 thereunder,[2] notice is hereby given that on June 3, 2013, EDGX Exchange, Inc. (the ''Exchange'' or ''EDGX'') filed with the Securities and Exchange Commission (''Commission'') the proposed rule change as described in Items I, II and III below, which items have been prepared by the self-regulatory organization. The Commission is publishing this notice to solicit comments on the proposed rule change from interested persons.

I. Self-Regulatory Organization's Statement of the Terms of Substance of the Proposed Rule Change

The Exchange proposes to amend its fees and rebates applicable to Members [3] of the Exchange pursuant to EDGX Rule 15.1(a) and (c). All of the changes described herein are applicable to EDGX Members. The text of the proposed rule change is available on the Exchange's Internet Web site at *www.directedge.com,* at the Exchange's principal office, and at the Public Reference Room of the Commission.

II. Self-Regulatory Organization's Statement of the Purpose of, and Statutory Basis for, the Proposed Rule Change

In its filing with the Commission, the self-regulatory organization included statements concerning the purpose of, and basis for, the proposed rule change and discussed any comments it received on the proposed rule change. The text of these statements may be examined at the places specified in Item IV below. The self-regulatory organization has prepared summaries, set forth in sections A, B and C below, of the most significant aspects of such statements.

A. Self-Regulatory Organization's Statement of the Purpose of, and the Statutory Basis for, the Proposed Rule Change

1. Purpose

The Exchange proposes to amend its fees and rebates applicable to Members of the Exchange pursuant to EDGX Rule 15.1(a) and (c) to: (1) Lower the default [4] rebate at the top of its fee schedule for adding liquidity in securities at or above $1.00 on EDGX from a rebate of $0.0021 per share to a rebate of $0.0020 per share and make conforming changes to add flags B, V, Y, 3, and 4; (2) make conforming changes to the internalization flags 5, EA, and ER; (3) increase the fee charged from $0.0018 per share to $0.0020 per share for orders that yield Flag RB, which routes to NASDAQ OMX BX (''BX'') and adds liquidity; (4) decrease the rebate from $0.0026 per share to $0.0020 per share for orders that yield Flag RS, which routes to NASDAQ OMX PSX (''PSX'') and adds liquidity; (5) add the Midpoint Match Volume Tier (''MPM Volume Tier'') to Footnote 3 of the Exchange's fee schedule; [5] and (6) amend the criteria to meet the $0.0035 per share Mega Tier in Footnote 1 as well as lower the associated removal and routing rate from $0.0020 per share to $0.0015 per share on the Exchange's fee schedule.

Lower Default Rebate

The Exchange proposes to lower the default rebate at the top of its fee schedule for adding liquidity in securities at or above $1.00 on EDGX from a rebate of $0.0021 per share to a rebate of $0.0020 per share. This change will also be reflected in the following added liquidity flags: B, V, Y, 3, and 4. The Exchange notes that Members will still qualify for all tiered rebates on the Exchange's fee schedule.

Amendments to Customer Internalization Fees

For customer internalization, which occurs when two orders presented to the Exchange from the same Member (i.e., MPID) are presented separately and not

[1] 15 U.S.C. 78s(b)(1).

[2] 17 CFR 240.19b–4.

[3] As defined in Exchange Rule 1.5(n).

[4] ''Default'' refers to the standard rebate provided to Members for orders that add liquidity to the Exchange absent Members qualifying for additional volume tiered pricing.

[5] References herein to ''Footnotes'' refer only to footnotes on the Exchange's fee schedule and not to footnotes within the current filing.

in a paired manner, but nonetheless inadvertently match with one another,[6] the Exchange currently charges $0.00045 per share per side of an execution (for adding liquidity and for removing liquidity) for Flags EA, ER, and 5. This charge occurs in lieu of the standard or tiered rebate/removal rates. Therefore, Members currently incur a total transaction cost of $0.0009 per share for both sides of an execution for customer internalization.

In SR–EDGX–2011–13,[7] the Exchange represented that it ''will work promptly to ensure that the internalization fee is no more favorable than each prevailing maker/taker spread.'' In order to ensure that the internalization fee is no more favorable than the proposed maker/taker spread of $0.0010 for the standard add rate (proposed rebate of $0.0020) and standard removal rate ($0.0030 charge per share), the Exchange is proposing to charge $0.0005 per side for customer internalization (flags EA, ER and 5). However, if a Member posts 10,000,000 shares or more of average daily volume (''ADV'') to EDGX, then the Member would get the current rate of $0.0001 per share per side for customer internalization.[8] If this occurs, then the Member's rate for inadvertently matching with itself decreases to $0.0001 per share per side, as reflected in Footnote 11. In each case (both tiered and standard rates), the charge for Members inadvertently matching with themselves is no more favorable than each maker/taker spread. The applicable rate for customer internalization thus allows the Exchange to discourage potential wash sales.

Fee Change for Flag RB

In securities priced at or above $1.00, the Exchange currently assesses a fee of $0.0018 per share for Members' orders that yield Flag RB, which routes to BX and adds liquidity. The Exchange proposes to amend its fee schedule to increase this fee to $0.0020 per share for Members' orders that yield Flag RB. The proposed change represents a pass through of the rate that Direct Edge ECN LLC (d/b/a DE Route) (''DE Route''), the Exchange's affiliated routing broker-dealer, is charged for routing orders to BX that add liquidity and do not qualify for a volume tiered discount. When DE Route routes to BX and adds liquidity, it is charged a default fee of $0.0020 per share.[9] DE Route will pass through this rate on BX to the Exchange and the Exchange, in turn, will pass through this rate to its Members. The Exchange notes that the proposed change is in response to BX's May 2013 fee filing with the Securities and Exchange Commission (the ''Commission''), wherein BX increased the rate it charges its customers, such as DE Route, from a charge of $0.0018 per share to a charge of $0.0020 per share for orders that are routed to BX and add liquidity.[10]

Rebate Change for Flag RS

In securities priced at $1.00 or above, the Exchange currently provides a rebate of $0.0026 per share for Members' orders that yield Flag RS, which routes to PSX and adds liquidity. The Exchange proposes to amend its fee schedule to decrease the rebate it provides Members from $0.0026 per share to $0.0020 per share for Flag RS. The proposed change represents a pass through of the rate that DE Route is rebated for routing orders to PSX that add liquidity and do not qualify for a volume tiered discount.[11] When DE Route routes to PSX and adds liquidity, it is provided a default rebate of $0.0020 per share. DE Route will pass through this rate on PSX to the Exchange and the Exchange, in turn, will pass through this rate to its Members. The Exchange notes that the proposed change is in response to PSX's May 2013 fee filing with the Commission, wherein PSX decreased the rebate it provides its customers, such as DE Route, from a rebate of $0.0026 per share to a rebate of $0.0020 per share for orders that are routed to PSX and add liquidity.[12]

Addition of MPM Volume Tier

The Exchange proposes to add the MPM Volume Tier to Footnote 3 of the Exchange's fee schedule. A Member could qualify for the MPM Volume Tier by adding and/or removing an ADV of at least 3,000,000 shares on a daily basis, measured monthly, on EDGX, yielding flags MM (adds liquidity to MPM using the Midpoint Match order type[13]) and/or MT (removes liquidity from MPM using MPM order type). Members qualifying for the MPM Volume Tier would not pay a fee for orders yielding Flag MM.

The Exchange notes that the proposed tier is subject to competitive forces because it is comparable to The NASDAQ Stock Market LLC's (''NASDAQ'') similar pricing tier that is dependent on achieving stipulated volume requirements in midpoint liquidity, as discussed in further detail below.

Amendment to $0.0035 Mega Tier

Lastly, Footnote 1 of the Exchange's fee schedule currently provides that Members may qualify for a Mega Tier rebate of $0.0035 per share (the ''$0.0035 Mega Tier'') for all liquidity posted on EDGX where Members add or route at least 2,000,000 shares of ADV prior to 9:30 a.m. or after 4:00 p.m. (including all flags except 6) and add a minimum of 35,000,000 shares of ADV on EDGX in total, including during both market hours and pre- and post-trading hours. In addition, for meeting the aforementioned criteria, Members will pay a reduced rate for removing liquidity of $0.0020 per share for Flags N, W, 6, 7, BB, PI, RT, and ZR. Where a Member does not meet the criteria for any Mega Tier, then a removal rate of $0.0030 per share applies.

The Exchange proposes to amend Footnote 1 of its fee schedule to increase the ADV requirement of the $0.0035 Mega Tier from 2,000,000 shares of ADV to 4,000,000 shares of ADV, add a requirement to have an ''added liquidity'' to ''added plus removed liquidity'' ratio of at least 85% where added flags are defined as B, V, Y, 3, 4,

[6] Members are advised to consult Rule 12.2 respecting fictitious trading.

[7] *See* Securities Exchange Release No. 64452 (May 10, 2011), 76 FR 28110, 28111 (May 13, 2011) (SR–EDGX–2011–13).

[8] EDGX has a variety of tiered rebates ranging from $0.0025–$0.0035 per share, which makes its maker/taker spreads range from $0.0005 (standard removal rate—Growth Tier), $0.0002 (standard removal rate—Super Tier or 0.65% total consolidated volume (''TCV'') step-up tier rebate), (standard removal rate—Step-Up Take tier or Investor Tier), −$0.0001 (standard removal rate—Ultra Tier rebate), −$0.0002 (standard removal rate—Mega Tier rebate of $0.0032), −$0.0003 (standard removal rate—Market Depth Tier rebate of $0.0033 per share), and −$0.0005 (standard removal rate—Mega Tier rebate of $0.0035 per share). As a result of the customer internalization charge, Members who internalized would be charged $0.0001 per share per side of an execution (total of $0.0002 per share) instead of capturing the maker/taker spreads resulting from achieving the tiered rebates.

[9] The Exchange notes that to the extent DE Route does or does not achieve any volume tiered rebate on BX, its rate for Flag RB will not change. *See* BX Fee Schedule, *http://www.nasdaqtrader.com/Trader.aspx?id=bx_pricing* (charging a default fee of $0.0020 per share for adding displayed liquidity to BX).

[10] *See* Securities Exchange Act Release No. 69522 (May 6, 2013), 78 FR 27464 (May 10, 2013) (SR–BX–2013–034) (amending the default fee BX charges for adding liquidity to the BX order book from $0.0018 per share to $0.0020 per share).

[11] The Exchange notes that to the extent DE Route does or does not achieve any volume tiered rebate on PSX, its rate for Flag RS will not change. *See* PSX Fee Schedule, *http://www.nasdaqtrader.com/Trader.aspx?id=PSX_pricing* (providing a default rebate of $0.0020 per share for adding displayed liquidity to PSX).

[12] *See* Securities Exchange Act Release No. 69588 (May 15, 2013), 78 FR 29801 (May 21, 2013) (SR–Phlx–2013–51) (amending the default rebate PSX provides for adding displayed liquidity to the PSX order book from $0.0026 per share to $0.0020 per share).

[13] As defined in Exchange Rule 11.5(c)(7), the Midpoint Match (''MPM'') order type is an order with an instruction to execute it at the midpoint of the NBBO.

HA, MM, RP, and ZA, and removal flags are defined as N, W, 6, BB, MT, PI, PR, and ZR and reduce the removal and/or routing rate associated with achieving this tier from $0.0020 per share to $0.0015 per share. The amended tier would read as follows:

Members can qualify for the Mega Tier and be provided a rebate of $0.0035 per share for all liquidity posted on EDGX if they (i) add or route at least 4,000,000 shares of ADV prior to 9:30 a.m. or after 4:00 p.m. (includes all flags except 6), (ii) add a minimum of 35,000,000 shares of ADV on EDGX in total, including during both market hours and pre and post-trading hours, and (iii) have an ''added liquidity'' to ''added plus removed liquidity'' ratio of at least 85% where added flags are defined as B, V, Y, 3, 4, HA, MM, RP, and ZA, and removal flags are defined as N, W, 6, BB, MT, PI, PR, and ZR. In addition, for meeting the aforementioned criteria, Members will pay a reduced rate for removing and/or routing liquidity of $0.0015 per share for Flags N, W, 6, 7, BB, PI, RT, and ZR.

The remainder of the footnote as it pertains to the $0.0035 per share Mega Tier rebate would remain unchanged.

As described in SR–EDGX–2013–16 [14] and discussed in further detail below, the $0.0035 Mega Tier is subject to competitive forces because it is comparable to NASDAQ's Routable Order Program (''ROP''),[15] a similar program with similar criteria focused on recognizing the propensity of Members representing retail customers to make use of exchange-provided routing strategies and pre- and post-market trading sessions, as compared with proprietary traders.[16]

Implementation Date

The Exchange proposes to implement these amendments to its fee schedule on June 3, 2013.

2. Statutory Basis

The Exchange believes that the proposed rule change is consistent with the objectives of Section 6 of the Act,[17] in general, and furthers the objectives of Section 6(b)(4),[18] in particular, as it is designed to provide for the equitable allocation of reasonable dues, fees and other charges among its Members and other persons using its facilities.

Lower Default Rebate

The Exchange believes that its proposal to lower the rebate from $0.0021 per share to $0.0020 per share is an equitable allocation of reasonable dues, fees and other charges as it will enable the Exchange to retain additional funds to offset increased administrative, regulatory, and other infrastructure costs associated with operating an exchange. The rate is reasonable in that it is comparable to rebates for adding liquidity offered by NYSE Arca, Inc. (''NYSE Arca'') (rebates of 0.0021 per share for Tapes A/C securities, $0.0022 per share for Tape B securities) and on NASDAQ (rebate of $0.0020 per share).[19] The Exchange believes that the proposed rebate is non-discriminatory in that it applies uniformly to all Members.

Amendments to Customer Internalization Fees

The Exchange believes that the increased fee for customer internalization from $0.00045 to $0.0005 per share per side of an execution for Flags EA, ER (regular trading session) and 5 (pre and post market) represents an equitable allocation of reasonable dues, fees, and other charges as it is designed to discourage Members from inadvertently matching with one another, thereby discouraging potential wash sales. The increased fee also allows the Exchange to offset its administrative, clearing, and other operating costs incurred in executing such trades. Finally, the fee is equitable in that it is consistent [20] with the EDGX fee structure that has a proposed maker/taker spread of $0.0010 per share (where the standard rebate to add liquidity on EDGX is proposed to be $0.0020 per share and the standard fee to remove liquidity is $0.0030 per share).

This increased fee per side of an execution on Flags EA, ER, and 5 ($0.0005 per side instead of $0.00045 per side per share), yields a total cost of $0.0010, thus making the internalization fee consistent with the current maker/taker spreads.[21] The Exchange believes that the proposed rate is non-discriminatory in that it applies uniformly to all Members.

Fee Change for Flag RB

The Exchange believes that its proposal to increase the pass through a charge for Members' orders that yield Flag RB from $0.0018 to $0.0020 per share represents an equitable allocation of reasonable dues, fees, and other charges among Members and other persons using its facilities because the Exchange does not levy additional fees or offer additional rebates for orders that it routes to BX through DE Route. Prior to BX's May 2013 fee filing, BX charged DE Route a fee of $0.0018 per share for orders yielding Flag RB, which DE Route passed through to the Exchange and the Exchange passed through to its Members. In BX's May 2013 fee filing, BX increased the rate it charges its customers, such as DE Route, from a charge of $0.0018 per share to a charge of $0.0020 per share for orders that are routed to BX and add liquidity.[22] Therefore, the Exchange believes that the proposed change in Flag RB from a fee of $0.0018 per share to a fee of $0.0020 per share is equitable and reasonable because it accounts for the pricing changes on BX. In addition, the proposal allows the Exchange to continue to charge its Members a pass-through rate for orders that are routed to BX and add liquidity using DE Route. The Exchange notes that routing through DE Route is voluntary. Lastly, the Exchange also believes that the proposed amendment is non-discriminatory because it applies uniformly to all Members.

Rebate Change for Flag RS

The Exchange believes that its proposal to decrease the pass through rebate for Members' orders that yield Flag RS from $0.0026 to $0.0020 per share represents an equitable allocation of reasonable dues, fees, and other charges among Members and other persons using its facilities because the Exchange does not levy additional fees or offer additional rebates for orders that it routes to PSX through DE Route. Prior to PSX's May 2013 fee filing, PSX provided DE Route a rebate of $0.0026 per share for orders yielding Flag RS, which DE Route passed through to the Exchange and the Exchange passed through to its Members. In PSX's May 2013 fee filing, PSX decreased the rebate it provides its customers, such as DE Route, from a rebate of $0.0026 per

[14] *See* Securities Exchange Act Release No. 69539 (May 8, 2013), 78 FR 28269, 28270 (May 14, 2013) (SR–EDGX–2013–16).

[15] *See* Nasdaq Equity Trader Alert 2013–8, *http://www.nasdaqtrader.com/TraderNews.aspx?id=ETA2013-8. See also,* NASDAQ, Price List—Trading Connectivity, *http://www.nasdaqtrader.com/Trader.aspx?id=PriceListTrading2.*

[16] *See* Securities Exchange Act Release No. 68905 (February 12, 2013), 78 FR 11716 (February 19, 2013) (SR–NASDAQ–2013–023).

[17] 15 U.S.C. 78f.

[18] 15 U.S.C. 78f(b)(4).

[19] NYSE Arca, NYSE Arca Equities Trading Fees, *http://usequities.nyx.com/markets/nyse-arca-equities/trading-fees;* NASDAQ, Price List—Trading & Connectivity, *http://www.nasdaqtrader.com/Trader.aspx?id=PriceListTrading2.*

[20] In each case, the internalization fee is no more favorable to the Member than each prevailing maker/taker spread.

[21] The Exchange will continue to ensure that the internalization fee is no more favorable than each prevailing maker/taker spread.

[22] *See* Securities Exchange Act Release No. 69522 (May 6, 2013), 78 FR 27464 (May 10, 2013) (SR–BX–2013–034) (amending the default fee BX charges for adding liquidity to the BX order book from $0.0018 per share to $0.0020 per share).

share to a rebate of $0.0020 per share for orders that are routed to PSX and add liquidity.[23] Therefore, the Exchange believes that the proposed decrease in rebate from $0.0026 per share to a rebate of $0.0020 per share for orders that yield Flag RS is equitable and reasonable because it accounts for the pricing changes on PSX. In addition, the proposal allows the Exchange to continue to charge its Members a pass-through rate for orders that are routed to PSX and add liquidity using DE Route. The Exchange notes that routing through DE Route is voluntary. Lastly, the Exchange also believes that the proposed amendment is non-discriminatory because it applies uniformly to all Members.

Addition of MPM Volume Tier

The Exchange believes that the addition of the MPM Volume Tier represents an equitable allocation of reasonable dues, fees, and other charges because it incentivizes Members to add midpoint liquidity to the EDGX Book.[24] In particular, the MPM Volume Tier is designed to incent Members to achieve preferred pricing by adding midpoint liquidity utilizing the MPM order type, yielding Flag MM by assessing no charge for all orders yielding Flag MM when a Member meets the criteria for the tier. The Exchange believes that Members utilizing orders that add liquidity to MPM may receive the benefit of price improvement, and the addition of the MPM Volume Tier and its associated lower rate would be a reasonable means by which to encourage the use of such orders. In addition, the Exchange believes that by encouraging the use of MPM orders, Members seeking price improvement would be more motivated to direct their orders to EDGX because they would have a heightened expectation of the availability of liquidity at the midpoint of the NBBO. Furthermore, the Exchange believes that adding the MPM Volume Tier would recognize the contribution that non-displayed liquidity provides to the marketplace, including price improvement opportunities and increased the diversity of liquidity to EDGX.

The Exchange also believes that the MPM Volume Tier is reasonable and equitably allocated because such increased liquidity benefits all investors by deepening EDGX's liquidity pool, offering additional flexibility for all investors to enjoy cost savings and improving investor protection. Furthermore, such increased volume would increase potential revenue to the Exchange and would allow the Exchange to spread its administrative and infrastructure costs over a greater number of shares, leading to lower per share costs. These lower per share costs in turn would allow the Exchange to pass on the savings to Members in the form of higher rebates and lower fees. Volume-based discounts such as the one proposed herein are widely utilized in the cash equities markets, and are equitable because they are open to all Members on an equal basis and provide discounts that are reasonably related to the value to an exchange's market quality associated with higher levels of market activity, such as higher levels of liquidity provision and opportunities for price improvement.

The Exchange believes that the proposed rate of no fee (free) for the MPM Volume Tier provided that Members add an ADV of 3,000,000 shares or more represents an equitable allocation of reasonable dues, fees, and other charges because lower charges are directly correlated with more stringent criteria. While similar to other tiers in the Exchange's fee schedule in this respect, the MPM Volume Tier cannot be directly compared to other tiers in the Exchange's fee schedule with regard to proportionality or consistency because of the nature of the tier, as a tier that specifically rewards adding non-displayed liquidity at the midpoint, sets it apart from all other tiers in the Exchange's fee schedule.

In addition, the proposed rate (free) offered by the MPM Volume Tier is reasonable because it is within industry norms. The Exchange notes that, based on the spread between rates for adding and removing liquidity, the proposed tier is comparable to NASDAQ's similar pricing tier that is dependent on achieving stipulated volume requirements in midpoint liquidity. In particular, NASDAQ currently provides a rebate of $0.0017 per share to its members that add greater than 3 million shares of midpoint liquidity on a monthly basis and a fee of $0.0030 per share to remove liquidity at the midpoint.[25] Accordingly, such members that add and remove liquidity at the midpoint and meet the criteria of the tier are subject to a spread of $0.0013 per share. The Exchange currently charges Members a fee of $0.0012 per share to remove liquidity at the midpoint and a fee of $0.0012 per share to add liquidity at the midpoint and offers no tiered pricing for midpoint orders. Accordingly, Members that add and remove liquidity at the midpoint are subject to a spread of $0.0024 per share. Under the proposed MPM Volume Tier (offering no fee for orders that add liquidity at the midpoint and meet the criteria for the tier), Members that add and remove liquidity at the midpoint and meet the requirements of the MPM Volume Tier would be subject to a spread of $0.0012 per share, bringing the spread provided by the Exchange to Members that meet its MPM Volume Tier in line with that provided by NASDAQ to its members that meet its similar midpoint tier ($0.0013 per share).

Lastly, the Exchange also believes that the proposed amendment is non-discriminatory because it applies uniformly to all Members.

Amendment to $0.0035 Mega Tier

The Exchange believes that the amendments to the $0.0035 Mega Tier to increase the volume requirement from 2,000,000 shares of ADV to 4,000,000 shares of ADV during pre- and post-trading hours, add a condition that requires Members to have an ''added liquidity'' to ''added plus removed liquidity'' ratio of at least 85%, and lower the associated reduced removal and/or routing rates for achieving this tier from $0.0020 per share to $0.0015 per share on Flags N, W, 6, 7, BB, PI, RT, and ZR represents an equitable allocation of reasonable dues, fees, and other charges. The $0.0035 Mega Tier was intended to encourage greater participation on EDGX by Members that represent retail customers.[26] In particular, the Exchange

[23] *See* Securities Exchange Act Release No. 69588 (May 15, 2013) (SR–Phlx–2013–51) (amending the default rebate PSX provides for adding displayed liquidity to the PSX order book from $0.0026 per share to $0.0020 per share).

[24] As defined in Exchange Rule 1.5(d).

[25] *See* NASDAQ, Price List—Trading Connectivity, *http://www.nasdaqtrader.com/Trader.aspx?id=PriceListTrading2* (providing for rebates to add non-displayed midpoint liquidity).

[26] *See* Securities Exchange Act Release No. 69539 (May 8, 2013), 78 FR 28269, 28270 (May 14, 2013) (SR–EDGX–2013–16) (adding flags RT and 7, yielded from routing strategies ROUT and pre- and post-routing, respectively, and utilized by retail investors, to the $0.0035 Mega Tier). The Exchange notes that the Commission has expressed concern that a significant percentage of the orders of individual investors are executed in over-the-counter markets, that is, at off exchange markets. Securities Exchange Act Release No. 61358 (January 14, 2010), 75 FR 3594 (January 21, 2010) (Concept Release on Equity Market Structure, ''Concept Release''). In the Concept Release, the Commission recognized the strong policy preference under the Act in favor of price transparency and displayed markets. *See also* Mary L. Schapiro, Strengthening Our Equity Market Structure (Speech at the Economic Club of New York, Sept. 7, 2010) (available on the Commission Web site) (comments of Commission Chairman on what she viewed as a troubling trend of reduced participation in the equity markets by individual investors, and that nearly 30 percent of volume in U.S.-listed equities is executed in venues that do not display their

Continued

notes that an ''added liquidity'' to ''added plus removed liquidity'' ratio of at least 85% is a characteristic of retail order flow, where retail members add substantially more liquidity than they remove. Members that primarily post liquidity are more valuable Members to the Exchange and the marketplace in terms of liquidity provision. Because retail orders are more likely to reflect long-term investment intentions than the orders of proprietary traders, they promote price discovery and dampen volatility. Accordingly, their presence on the EDGX Book has the potential to benefit all market participants. For this reason, EDGX believes that it is equitable to provide significant financial incentives to encourage greater retail participation in the market in general and on EDGX in particular. The Exchange believes that increasing the volume requirement and requiring the addition of an ''added liquidity'' to ''added plus removed liquidity'' ratio of at least 85% may result in increased volume in retail orders by firms aspiring to meet the criteria of the tier and, accordingly, would lead to benefits for all market participants.

The Exchange believes that the amendment is reasonable because higher rebates and proposed reduced fees for removal of liquidity and/or routing are directly correlated with more stringent criteria. The criteria for the $0.0035 Mega Tier is the most stringent of all other tiers on the Exchange's fee schedule. In order to qualify for the next best tier after the Mega Tier, the Market Depth Tier, a Member would receive a rebate of $0.0033 per share for displayed liquidity added on EDGX if they post greater than or equal to 0.50% of the Total Consolidated Volume (''TCV'') in ADV on EDGX in total, where at least 2 million shares of which are non-displayed orders that yield Flag HA. Assuming a TCV of 6 billion shares for April 2013, this would amount to 30 million shares, at least 2 million shares of which are non-displayed orders. In order for Members to qualify for the next best tier after the Market Depth Tier and be provided a rebate of $0.0032 per share for all liquidity posted on EDGX, Members must add or route at least 4,000,000 shares of ADV prior to 9:30 a.m. or after 4:00 p.m. (includes all flags except 6) and add a minimum of .20% of the TCV on a daily basis measured monthly, including during both market hours and pre and post-trading hours (''$0.0032 Mega Tier''). Based on a TCV of 6 billion shares for April 2013, this would be 12 million shares. The criteria for the Market Depth Tier and $0.0032 Mega Tier are less stringent then the volume thresholds for the $0.0035 Mega Tier Rebate because Members must add a minimum of 35 million shares of ADV, have an ''added liquidity'' to ''added plus removed liquidity'' ratio of at least 85%,[27] and add or route at least 4 million shares of ADV during pre- and post-trading hours to earn a rebate of $0.0035 per share and be eligible for the proposed lower removal and/or routing fees ($0.0015 per share).

As discussed, the criteria for the $0.0035 Mega Tier is the most stringent as fewer Members generally trade during pre- and post-trading hours because of the limited time parameters associated with these trading sessions, which generally results in less liquidity. The Exchange incentivizes adding resting liquidity by assigning a higher value to this liquidity because liquidity received prior to the regular trading session typically remains resident on the EDGX Book throughout the remainder of the entire trading day. Such liquidity received during pre- and post-trading hours is an important contributor to price discovery and acts as an important indication of price for the market as a whole considering the relative illiquidity of the pre- and post-trading hour sessions. The Exchange believes that increasing the volume requirement of the tier, requiring the addition of an ''added liquidity'' to ''added plus removed liquidity'' ratio of at least 85%, and reducing the favorable removal and/or routing rates for achieving this tier is reasonable because it may result in increased liquidity during these trading sessions submitted by Members aspiring to meet the criteria of the tier. Such increased liquidity benefits all investors by deepening EDGX's liquidity pool, supporting the quality of price discovery, promoting market transparency and improving investor protection.

The Exchange believes that it is reasonable to lower removal and/or routing fees using liquidity provision patterns. First, the lower removal and/or routing rates are similar to the Exchange's Step-up Take Tier in Footnote 2 of its fee schedule[28] and other similar tiers on NYSE Arca[29] in that it offers a discounted removal rate that is designed to incent fee sensitive liquidity takers to the Exchange provided they are able to meet certain volume requirements. The Exchange believes that the proposed reduction of certain of the Exchange's routing fees (Flags RT and 7) provided the criteria for the $0.0035 Mega Tier Rebate is met is equitably allocated, fair and reasonable, and non-discriminatory in that the lower fees are equally applicable to all Members that meet the applicable criteria and are designed to encourage greater retail participation on EDGX.

In addition, the proposed amendment to the volume requirement in the $0.0035 Mega Tier is reasonable and within industry norms because the strict requirements to meet the tier reflect the substantial benefits offered by the tier. As described in SR–EDGX–2013–16,[30] the $0.0035 Mega Tier is comparable to NASDAQ's ROP,[31] a similar program with similar criteria focused on recognizing the propensity of Members representing retail customers to make use of exchange-provided routing strategies and pre- and post-market trading sessions, as compared with proprietary traders.[32] To qualify for the ROP and receive a rebate of $0.0037 per share and a reduced removal fee of $0.0029 per share for SCAN or LIST orders that access liquidity on NASDAQ, an MPID must: (i) Add 35 million shares or more per day on average using the SCAN or LIST routing strategies; and (ii) of the liquidity provided using SCAN or LIST strategies, at least 2 million shares per day on average must be provided before the NASDAQ opening cross and/or after the NASDAQ closing cross. The proposed reduced removal/routing rate of $0.0015 per share, when compared to the reduced charge offered by NASDAQ ($0.0029), is substantially more favorable to market participants. As

liquidity or make it generally available to the public).

[27] Assuming 35 million shares added volume, Members can remove no more than 6.2 million shares to achieve this 85% ratio.

[28] *See* Securities Exchange Act Release No. 68166 (November 6, 2012), 77 FR 67695 (November 13, 2012) (SR–EDGX–2012–46).

[29] The Exchange's discounted removal rate from $0.0030 per share to the proposed rate of $0.0015 per share for Members that achieve the $0.0035 Mega Tier is also reasonable because it is similar in concept to discounts offered by NYSE Arca, where the default removal rate is $0.0030 per share and customers that qualify for the Tape C Step Up Tier earn discounts of $0.0029 per share. *See* NYSE Arca, Schedule of Fees and Charges for Exchange Services, *https://usequities.nyx.com/sites/usequities.nyx.com/files/nyse_arca_marketplace_fees_5_1_13.pdf.*

[30] *See* Securities Exchange Act Release No. 69539 (May 8, 2013), 78 FR 28269, 28270 (May 14, 2013) (SR–EDGX–2013–16).

[31] *See* Nasdaq Equity Trader Alert 2013–8, *http://www.nasdaqtrader.com/TraderNews.aspx?id=ETA2013-8. See also,* NASDAQ, Price List—Trading Connectivity, *http://www.nasdaqtrader.com/Trader.aspx?id=PriceListTrading2.*

[32] *See* Securities Exchange Act Release No. 68905 (February 12, 2013), 78 FR 11716 (February 19, 2013) (SR–NASDAQ–2013–023).

such, the Exchange believes that the proposed reduced removal/routing rate of $0.0015 per share offered by the $0.0035 Mega Tier justifies a stricter volume requirement. Accordingly, the Exchange believes that it is reasonable to increase the volume requirement to meet the tier from 2,000,000 shares of ADV to 4,000,000 shares of ADV during pre- and post-trading hours. In addition, similar to NASDAQ's ROP's reduced removal fees, the proposed reduction in removal fees and routing rates for the Exchange's listed flags is reasonable because it reflects significant fee reductions, thereby reducing the costs to Members that represent retail customers and take advantage of the tier, and potentially also reducing costs to the retail customers themselves. The change is consistent with an equitable allocation of fees because EDGX believes that it is reasonable to use fee reductions on removal and routing fees as a means to encourage greater retail participation on EDGX. In particular, Flags RT and 7 are proposed to be offered lower routing rates because they are yielded from routing strategies ROUT [33] and pre and post-session routing, respectively, which are used by retail investors and are similar to NASDAQ's SCAN routing strategy.[34] The other removal flags selected (Flags N, W, 6, BB, PI, and ZR) represent all possible removal flags that are yielded from removing liquidity from EDGX.

Lastly, the Exchange also believes that the proposed amendment is non-discriminatory because the amended tier applies uniformly to all Members, whether or not they represent retail customers, that provide significant levels of liquidity, and is therefore complementary to existing incentives that already aim to encourage greater retail participation, such as EDGX's Retail Order Tier [35] and flags ZA/ZR in Footnote 4 of its fee schedule.

B. Self-Regulatory Organization's Statement on Burden on Competition

These proposed rule changes do not impose any burden on competition that is not necessary or appropriate in furtherance of the purposes of the Act. The Exchange does not believe that any of these changes represent a significant departure from previous pricing offered by the Exchange or pricing offered by any of the Exchange's competitors. Additionally, Members may opt to disfavor the Exchange's pricing if they believe that alternatives offer them better value. Accordingly, the Exchange believes that the proposed changes would not impair the ability of Members or competing venues to maintain their competitive standing in the financial markets.

The Exchange believes that its proposal to lower the rebate from $0.0021 per share to $0.0020 per share will also assist in increasing competition in that its proposed rebate is comparable to rebates for adding liquidity offered by NYSE Arca (rebates of $0.0021 per share for adding liquidity in Tapes A/C securities and $0.0022 per share for adding liquidity in Tape B securities) and on NASDAQ (rebate of $0.0020 per share).[36]

The Exchange believes that its internalization rates for securities priced $1.00 and above will also not burden intermarket or intramarket competition as the proposed rates are no more favorable than Members achieving the maker/taker spreads between the default add and remove rates on EDGX.

The Exchange believes that its proposal to pass through a charge of $0.0020 per share for Members' orders that yield Flag RB would increase intermarket competition because it offers customers an alternative means to route to BX and add liquidity for the same price as entering orders on BX directly. The Exchange believes that its proposal would not burden intramarket competition because the proposed rate would apply uniformly to all Members.

The Exchange believes that its proposal to pass through a rebate of $0.0020 per share for Members' orders that yield Flag RS would increase intermarket competition because it offers customers an alternative means to route to PSX and add liquidity for the same price as entering orders on PSX directly. The Exchange believes that its proposal would not burden intramarket competition because the proposed rate would apply uniformly to all Members.

The Exchange believes that its proposal would increase competition for routing services because the market for order execution is competitive and the Exchange's proposal provides customers with another alternative to route their orders. The Exchange notes that routing through DE Route is voluntary.

The Exchange believes that its proposal to add the MPM Volume Tier would increase intermarket competition because it will lead to more competition for orders that seek liquidity at the midpoint of the NBBO. The Exchange believes that its proposal would neither increase nor decrease intramarket competition because the MPM Volume Tier and its associated rate is available to all Members on a uniform basis.

The Exchange believes that its proposal to increase the volume requirement, add a requirement that ''added liquidity'' to ''added plus removed liquidity'' ratio of at least 85%, and decrease the associated reduced removal and/or routing rate for achieving the $0.0035 Mega Tier would increase intermarket competition because Members that seek to meet the tier would be required to send higher volume to the Exchange. The Exchange believes that its proposal would neither increase nor decrease intramarket competition because the rate for the $0.0035 Mega Tier would continue to apply uniformly to all Members and the ability of some Members to meet the tier would only benefit other Members by contributing to increased price discovery and better market quality at the Exchange, especially during pre- and post-market sessions.

C. Self-Regulatory Organization's Statement on Comments on the Proposed Rule Change Received From Members, Participants, or Others

The Exchange has not solicited, and does not intend to solicit, comments on this proposed rule change. The Exchange has not received any unsolicited written comments from Members or other interested parties.

III. Date of Effectiveness of the Proposed Rule Change and Timing for Commission Action

The foregoing rule change has become effective pursuant to Section 19(b)(3)(A) of the Act [37] and Rule 19b–4(f)(2) [38] thereunder. At any time within 60 days of the filing of such proposed rule change, the Commission summarily may temporarily suspend such rule change if

[33] As defined in Exchange Rule 11.9(b)(2).

[34] *See* NASDAQ Rule 4758(a)(1)(A)(iv). *See also* Securities Exchange Act Release No. 68905 (February 12, 2013), 78 FR 11716, 11717 (February 19, 2013) (SR–NASDAQ–2013–023) (describing SCAN as a basic NASDAQ routing strategy that is widely used by firms that represent retail customers. SCAN checks the NASDAQ Market Center System for available shares, while remaining shares are simultaneously routed to destinations on the applicable routing table. If shares remain un-executed after routing, they are posted on the NASDAQ book).

[35] Footnote 4 of the Exchange's fee schedule provides that Members will be provided a rebate of $0.0034 per share if they add an average daily volume of Retail Orders (Flag ZA) that is 0.10% or more of the TCV on a daily basis, measured monthly.

[36] NYSE Arca, NYSE Arca Equities Trading Fees, *http://usequities.nyx.com/markets/nyse-arca-equities/trading-fees;* NASDAQ, Price List—Trading & Connectivity, *http://www.nasdaqtrader.com/Trader.aspx?id=PriceListTrading2.*

[37] 15 U.S.C. 78s(b)(3)(A).

[38] 17 CFR 240.19b–4(f)(2).

it appears to the Commission that such action is necessary or appropriate in the public interest, for the protection of investors, or otherwise in furtherance of the purposes of the Act.

IV. Solicitation of Comments

Interested persons are invited to submit written data, views, and arguments concerning the foregoing, including whether the proposed rule change is consistent with the Act. Comments may be submitted by any of the following methods:

Electronic Comments

- Use the Commission's Internet comment form (*http://www.sec.gov/rules/sro.shtml*); or
- Send an email to *rule-comments@sec.gov.* Please include File Number SR–EDGX–2013–19 on the subject line.

Paper Comments

- Send paper comments in triplicate to Elizabeth M. Murphy, Secretary, Securities and Exchange Commission, 100 F Street NE., Washington, DC 20549–1090.

All submissions should refer to File Number SR–EDGX–2013–19. This file number should be included on the subject line if email is used. To help the Commission process and review your comments more efficiently, please use only one method. The Commission will post all comments on the Commission's Internet Web site (*http://www.sec.gov/rules/sro.shtml*). Copies of the submission, all subsequent amendments, all written statements with respect to the proposed rule change that are filed with the Commission, and all written communications relating to the proposed rule change between the Commission and any person, other than those that may be withheld from the public in accordance with the provisions of 5 U.S.C. 552, will be available for Web site viewing and printing in the Commission's Public Reference Room, 100 F Street NE., Washington, DC 20549, on official business days between the hours of 10:00 a.m. and 3:00 p.m. Copies of the filing also will be available for inspection and copying at the principal office of the Exchange. All comments received will be posted without change; the Commission does not edit personal identifying information from submissions. You should submit only information that you wish to make available publicly. All submissions should refer to File Number SR–EDGX–2013–19 and should be submitted on or before July 5, 2013.

For the Commission, by the Division of Trading and Markets, pursuant to delegated authority.[39]

Kevin M. O'Neill,

Deputy Secretary.

[FR Doc. 2013–14114 Filed 6–13–13; 8:45 am]

BILLING CODE 8011–01–P

SECURITIES AND EXCHANGE COMMISSION

[Release No. 34–69671; File No. SR–Phlx–2013–59]

Self-Regulatory Organizations; NASDAQ OMX PHLX LLC; Notice of Filing and Immediate Effectiveness of Proposed Rule Change To Apply a Strategy Fee Cap to Jelly Rolls

May 30, 2013.

Correction

In notice document 2013–13274, appearing on pages 33877–33880 in the issue of Wednesday, June 5, 2013, make the following correction:

On page 33877, in the second column, the heading is corrected to read as set forth above.

[FR Doc. C1–2013–13274 Filed 6–13–13; 8:45 am]

BILLING CODE 1505–01–D

SECURITIES AND EXCHANGE COMMISSION

[Release No. 34–69723; File No. SR–OCC–2013–08]

Self-Regulatory Organizations; The Options Clearing Corporation; Notice of Filing of Proposed Rule Change To Reflect Enhancements in OCC's System for Theoretical Analysis and Numerical Simulations as Applied to Longer-Tenor Options

June 10, 2013.

Pursuant to Section 19(b)(1) of the Securities Exchange Act of 1934 (''Act'')[1] and Rule 19b–4 thereunder,[2] notice is hereby given that on May 30, 2013, The Options Clearing Corporation (''OCC'') filed with the Securities and Exchange Commission (''Commission'') the proposed rule change as described in Items I and II below, which Items have been prepared by the clearing agency.[3] The Commission is publishing this notice to solicit comments on the proposed rule change from interested persons.

I. Clearing Agency's Statement of the Terms of Substance of the Proposed Rule Change

The proposed rule change would provide for enhancements in OCC's margin model for longer-tenor options (*i.e.,* those options with at least three years of residual tenor) and would reflect those enhancements in the description of OCC's margin model in OCC's Rules.

II. Clearing Agency's Statement of the Purpose of, and Statutory Basis for, the Proposed Rule Change

In its filing with the Commission, OCC included statements concerning the purpose of and basis for the proposed rule change and discussed any comments it received on the proposed rule change. The text of these statements may be examined at the places specified in Item IV below. OCC has prepared summaries, set forth in sections A, B, and C below, of the most significant aspects of such statements.[4]

(A) Clearing Agency's Statement of the Purpose of, and Statutory Basis for, the Proposed Rule Change

The purpose of this proposed rule change is to provide for enhancements in OCC's margin model for longer-tenor options (*i.e.,* those options with at least three years of residual tenor) and to reflect those enhancements in the description of OCC's margin model in OCC's Rules. OCC also proposes to make changes to the description of OCC's margin model to clarify that description.

1. Background

On August 30, 2012, OCC submitted a rule change with respect to OCC's proposal to clear certain over-the-counter options on the S&P 500 Index (''OTC Options'').[5] The OTC Options Rule Filing, as amended, added a statement appearing before Section 6 of Article XVII of OCC's By-Laws that ''THE BY–LAWS IN THIS SECTION (OTC INDEX OPTIONS) ARE

---

[39] 17 CFR 200.30–3(a)(12).

[1] 15 U.S.C. 78s(b)(1).

[2] 17 CFR 240.19b–4.

[3] OCC also filed the proposed rule change as an advance notice under Section 806(e)(1) of Title VIII of the Dodd-Frank Wall Street Reform and Consumer Protection Act entitled the Payment, Clearing, and Settlement Supervision Act of 2010 (''Clearing Supervision Act''). 12 U.S.C. 5465(e)(1). *See* SR–OCC–2013–803.

[4] The Commission has modified the text of the summaries prepared by OCC.

[5] *See* Release No. 34–67835; File No. SR–OCC–2012–14 (''OTC Options Rule Filing''); published September 18, 2012 at 77 FR 57602. SR–OCC–2012–14 replaced SR–OCC–2011–19, which was withdrawn on March 9, 2012. The OTC Options Rule Filing was subsequently amended to add a statement to Section 6 of Article XVII of OCC's By-Laws providing that the OTC Index Options By-Laws were to be inoperative until further notice by OCC. *See* File No. SR–OCC–2012–14 Amendment No.1.

INOPERATIVE UNTIL FURTHER NOTICE BY THE CORPORATION'' to clarify that OCC would not commence clearing OTC Options until the changes being made to OCC's margin model for longer-tenor options, as provided in this rule change, were put in place, notwithstanding whether the OTC Options Rule Filing had already been approved. OCC is now proposing to remove this statement from Section 6, which will allow OCC to commence clearing of OTC Options on the S&P 500 Index.

Additional information concerning OCC's proposal to clear OTC Options is included in the OTC Options Rule Filing. As described in the OTC Options Rule Filing, OCC intends to use its STANS margin system to calculate margin requirements for OTC Options on the same basis as for exchange-listed options cleared by OCC. However, OCC is proposing to implement enhancements to its risk models for all longer-tenor options (including OTC Options) in order to better reflect certain risks of longer-tenor options. The changes described herein would apply to all longer-tenor options cleared by OCC and would be implemented before OCC begins clearing OTC Options.

2. Description of Proposed Rule Changes

OCC states that the proposed rule change includes daily OTC quotes, variations in implied volatility, and valuation adjustments in the modeling of all longer-tenor options under STANS, thereby enhancing OCC's ability to set margin requirements through the use of risk-based models and parameters and encouraging clearing members to have sufficient financial resources to meet their obligations to OCC. OCC believes the proposed rule change would not affect OCC's safeguarding of securities and funds in its custody or control because, though it may change margin requirements in respect of certain longer-tenor options, it does not change the manner in which margin assets are pledged. In addition, OCC believes the proposed rule change allows OCC to enhance its risk management procedures and controls related to longer-tenor options.

OCC states that it calculates clearing-level margin using STANS, which determines the minimum expected liquidating value of each account using a large number of projected price scenarios created by large-scale Monte Carlo simulations. OCC is proposing to implement enhancements to the STANS margin calculation methodology with respect to longer-tenor options and to amend Rule 601 to reflect these enhancements as well as to make certain clarifying changes in the description of STANS in Rule 601. The specific details of the calculations performed by STANS are maintained in OCC's proprietary procedures for the calculation of margin and coded into the computer systems used by OCC to calculate daily margin requirements.

OCC has proposed at this time to clear only OTC Options on the S&P 500 index and only such options with tenors of up to five years. However, OCC currently clears FLEX Options with tenors of up to fifteen years. While OCC believes that its current risk management practices are adequate for current clearing activity, OCC proposes to implement risk modeling enhancements with respect to all longer-tenor options.

Daily OTC Indicative Quotes

OCC states that, in general, the market for listed longer-tenor options is less liquid that the market for other options, with less volume and therefore less price information. In order to supplement OCC's pricing data derived from the listed markets, and to improve the price discovery process for longer-tenor options, OCC proposes to include in the daily dataset of market prices used by STANS to value each portfolio indicative daily quotations obtained through a third-party service provider that obtains these quotations through a daily poll of OTC derivatives dealers. A third-party service provider was selected to provide this data in lieu of having the data provided directly by the OTC derivatives dealers in order to avoid unnecessarily duplicating reporting that is already done in the OTC markets.

Variations in Implied Volatility

OCC states that, to date, the STANS methodology has assumed that implied volatilities of option contracts do not change during the two-day risk horizon used by OCC in the STANS methodology. According to OCC, back testing of its margin models has identified few instances in which this assumption would have, as a result of sudden changes in implied volatility, resulted in margin deposits insufficient to liquidate clearing member accounts without loss. However, as OCC expects to begin clearing more substantial volumes of longer-tenor options, including OTC Options, OCC believes that implied volatility shocks may become more relevant due to the greater sensitivity of longer-tenor options to implied volatility. OCC therefore proposes to introduce variations in implied volatility in the modeling of all longer-tenor options under STANS. OCC states that this will be achieved by incorporating, into the set of risk factors whose behavior is included in the econometric models underlying STANS, time series of proportional changes in implied volatilities for a range of tenors and in-the-money and out-of-the-money amounts representative of the dataset provided by OCC's third-party service provider.

OCC states that it has reviewed individual S&P 500 Index put and call options positions with varying in-the-money amounts and with four to nine years of residual tenor and that such review indicates that the inclusion of modeled implied volatilities tends to result in less margin being held against short call positions and more margin being held against short put positions. OCC believes these results are consistent with what would be expected given the strong negative correlation that exists between changes in implied volatility and market returns.

OCC states that the description of the Monte Carlo simulations performed within STANS in Rule 601 references revaluations of assets and liabilities in an account under numerous price scenarios for ''underlying interests.'' In order to accommodate the proposed implied volatility enhancements, OCC is proposing to amend this portion of Rule 601 to provide that the scenarios used may also involve projected levels of other variables influencing prices of cleared contracts and modeled collateral. Accordingly, the references to ''underlying interests'' are proposed to be deleted.

Valuation Adjustment

OCC states that historically it has not cleared a significant volume of longer-tenor options, but that it anticipates that there will be growth in volume of longer-tenor options, including OTC Options, being cleared with three to five year tenors. Longer-tenor options may represent a larger portion of any clearing member's portfolio in the future, and OCC has therefore identified a need to model anticipated changes in the value of longer-tenor options on a portfolio basis in order to address OCC's exposure to longer-tenor options that may have illiquid characteristics. OCC proposes to introduce a valuation adjustment into the portfolio net asset value used by STANS based upon the aggregate sensitivity of any longer-tenor options in a portfolio to the overall level of implied volatilities at three years and five years and to the relationship between implied volatility and exercise prices at both the three- and five-year tenors in order to allow for the anticipated market impact of unwinding

a portfolio of longer-tenor options, as well as for any differences in the quality of data in OCC's third party service provider's dataset, given that month-end data may be subjected to more extensive validation by the service provider than daily data. In order to accommodate the planned valuation adjustment for longer-tenor options, OCC proposes to add language to Rule 601 to indicate that the projected portfolio values under the Monte Carlo simulations may be adjusted to account for bid-ask spreads, illiquidity, or other factors.

Clarification of Pricing Model Reference in Rule 601

Rule 601 currently refers to the use of ''options pricing models'' to predict the impact of changes in values on positions in OCC-cleared contracts. OCC is proposing to amend this description to reflect that OCC currently uses non-options related models to price certain instruments, such as futures contracts and U.S. Treasury securities. OCC states that this change is not intended to be substantive and simply clarifies the description in Rule 601.

Effect on Clearing Members

OCC believes that the proposed rule change will affect clearing members who engage in transactions in longer-tenor options, and indirectly their customers, by enhancing the STANS margin calculation methodology for these options. The STANS enhancements could increase margin requirements with respect to these positions. However, OCC states that it does not believe that the enhancements will result in significantly increased margin requirements for any particular clearing member, and therefore that it is not aware of any significant problems that clearing members are likely to have in complying with the proposed rule change.

OCC believes the proposed rule change is consistent with the purposes and requirements of Section 17A(b)(3)(F) of the Act[6] and the rules and regulations thereunder, including Rules 17Ad–22(b)(2) and (d)(2), because, by providing additional clarity to clearing members and others concerning the current calculation of margin requirements under OCC's Rules, while also enhancing the calculation of margin with respect to longer-tenor options, the proposed modifications would help remove impediments to and perfect the mechanism of a national system for the prompt and accurate clearance and settlement of securities transactions,[7] ensure that OCC's rules are reasonably designed to have participation requirements that are objective and publicly disclosed and permit fair and open access,[8] and provide for a well-founded, transparent, and enforceable legal framework.[9] OCC states that the proposed rule change is not inconsistent with any rules of OCC, including any other rules proposed to be amended.

(B) Clearing Agency's Statement on Burden on Competition

OCC does not believe that the proposed rule change would impose a burden on competition that is not necessary or appropriate in furtherance of the purposes of the Act. With respect to a burden on competition among clearing agencies, OCC does not believe that the proposed rule change would have any impact because OCC is the only registered clearing agency that issues options and provides central counterparty services to the options markets.

OCC does not believe that enhancing OCC's margin model for longer-tenor options would inhibit access to any of OCC's services or disadvantage or favor any user of OCC's services in relationship to any other such user because the model enhancements would apply equally to all clearing members clearing longer-tenor options. Moreover, OCC believes that the proposed rule change would also promote competition among participants in the longer-tenor options markets. The rule change would enhance OCC's ability to manage risk within OCC's existing structure, and improve OCC's ability to reduce systemic risk to the longer-tenor options market in general as well as reduce inter-dealer counterparty risk in the OTC Options market, allowing for increased participation in this market.

For the foregoing reasons, OCC believes that the proposed rule change is in the public interest, would be consistent with the requirements of the Act applicable to clearing agencies, and would not impose a burden on competition that is unnecessary or inappropriate in furtherance of the purposes of the Act because the changes would enhance OCC's margin methodology for longer-tenor options in ways that help to promote the purposes of the Act and Rule 17Ad–22 thereunder as described above.

(C) Clearing Agency's Statement on Comments on the Proposed Rule Change Received From Members, Participants, or Others

Written comments were not and are not intended to be solicited by OCC with respect to the proposed rule change and none have been received.

III. Date of Effectiveness of the Proposed Rule Change and Timing for Commission Action

Within 45 days of the date of publication of this notice in the **Federal Register** or within such longer period up to 90 days (i) as the Commission may designate if it finds such longer period to be appropriate and publishes its reasons for so finding or (ii) as to which the self-regulatory organization consents, the Commission will:

(A) by order approve or disapprove such proposed rule change, or

(B) institute proceedings to determine whether the proposed rule change should be disapproved.

The proposal shall not take effect until all regulatory actions required with respect to the proposal are completed.[10]

IV. Solicitation of Comments

Interested persons are invited to submit written data, views and arguments concerning the foregoing, including whether the proposed rule change is consistent with the Act. Comments may be submitted by any of the following methods:

Electronic Comments

- Use the Commission's Internet comment form (*http://www.sec.gov/rules/sro.shtml*); or
- Send an email to *rule-comments@sec.gov.* Please include File Number SR–OCC–2013–08 on the subject line.

Paper Comments

- Send paper comments in triplicate to Elizabeth M. Murphy, Secretary, Securities and Exchange Commission, 100 F Street NE., Washington, DC 20549–1090.

All submissions should refer to File Number SR–OCC–2013–08. This file number should be included on the subject line if email is used. To help the Commission process and review your comments more efficiently, please use only one method. The Commission will post all comments on the Commission's Internet Web site (*http://www.sec.gov/rules/sro.shtml).* Copies of the

[6] 15 U.S.C. 78q–1.

[7] 15 U.S.C. 78q–1(b)(3)(F).

[8] 17 CFR 240.17Ad–22(d)(2).

[9] 17 CFR 240.17Ad–22(d)(1).

[10] OCC also filed the proposed rule change as an advance notice under Section 806(e)(1) of the Clearing Supervision Act. *See supra* note 3.

submission, all subsequent amendments, all written statements with respect to the proposed rule change that are filed with the Commission, and all written communications relating to the proposed rule change between the Commission and any person, other than those that may be withheld from the public in accordance with the provisions of 5 U.S.C. 552, will be available for Web site viewing and printing in the Commission's Public Reference Room, 100 F Street NE., Washington, DC 20549 on official business days between the hours of 10:00 a.m. and 3:00 p.m. Copies of the filing also will be available for inspection and copying at the principal office of OCC and on OCC's Web site (*http://www.theocc.com/about/publications/bylaws.jsp*). All comments received will be posted without change; the Commission does not edit personal identifying information from submissions. You should submit only information that you wish to make available publicly. All submissions should refer to File Number SR–OCC–2013–08 and should be submitted on or before July 5, 2013.

For the Commission, by the Division of Trading and Markets, pursuant to delegated authority.[11]

Kevin M. O'Neill,

Deputy Secretary.

[FR Doc. 2013–14112 Filed 6–13–13; 8:45 am]

BILLING CODE 8011–01–P

[11] 17 CFR 200.30–3(a)(12).

SECURITIES AND EXCHANGE COMMISSION

[Release No. 34–69722; File No. SR–OCC–2013–07]

Self-Regulatory Organizations; The Options Clearing Corporation; Notice of Filing and Immediate Effectiveness of Proposed Rule Change To Amend the Short-Form License Agreement That Must Be Signed by OCC Clearing Members Seeking To Clear Over-the-Counter Index Options on Underlying Indices Published by Standard & Poor's Financial Services LLC

June 10, 2013.

Pursuant to Section 19(b)(1) of the Securities Exchange Act of 1934 (''Act'')[1] and Rule 19b–4 thereunder,[2] notice is hereby given that on May 31, 2013, The Options Clearing Corporation (''OCC'') filed with the Securities and Exchange Commission (''Commission'') the proposed rule change as described in Items I and II below, which Items have been prepared by the clearing agency. OCC filed the proposed rule change pursuant to Section 19(b)(3)(A)(i) of the Act[3] and Rule 19b(4)(f)(1) thereunder[4] so that the proposal was effective upon filing with the Commission. The Commission is publishing this notice to solicit comments on the proposed rule change from interested persons.

[1] 15 U.S.C. 78s(b)(1).

[2] 17 CFR 240.19b–4.

[3] 15 U.S.C. 78s(b)(3)(A)(i).

[4] 17 CFR 240.19b–4(f)(1).

I. Clearing Agency's Statement of the Terms of Substance of the Proposed Rule Change

OCC proposes to amend the short-form license agreement that must be signed by OCC clearing members seeking to clear over-the-counter (''OTC'') index options on underlying indices published by Standard & Poor's Financial Services LLC (''S&P®'').

II. Clearing Agency's Statement of the Purpose of, and Statutory Basis for, the Proposed Rule Change

In its filing with the Commission, OCC included statements concerning the purpose of and basis for the proposed rule change and discussed any comments it received on the proposed rule change. The text of these statements may be examined at the places specified in Item IV below. OCC has prepared summaries, set forth in sections (A), (B), and (C) below, of the most significant aspects of these statements.

(A) Clearing Agency's Statement of the Purpose of, and Statutory Basis for, the Proposed Rule Change

The purpose of this proposed rule change is to amend the S&P short-form license agreement that clearing members must execute if they plan to participate in OCC's initiative to clear and settle index options that are negotiated bilaterally in the OTC market and submitted to OCC for clearing (the ''S&P Agreement''). On August 30, 2012, OCC filed with the Securities and Exchange Commission (''Commission'') proposed rule change SR–OCC–2012–14 pursuant to Section 19(b)(1) of the Securities Exchange Act of 1934 (''Act'')[5] and Rule 19b–4 thereunder[6] (''Proposed Rule Change'') and as an Advance Notice (AN–OCC–2012–01) pursuant to Section 806(e) of Title VIII of the Dodd-Frank Act (''Title VIII'' or ''Clearing Supervision Act'').[7] The Proposed Rule Change and Advance Notice were published for comment in the **Federal Register** on September 18, 2012[8] and September 27, 2012,[9] respectively. On November 30, 2012, OCC filed Amendment No. 1 to the Proposal.[10] An Order was issued by the Commission approving the Proposed Rule Change and providing notice that there was no objection to the Advance Notice (the ''Approved Rule Change'').[11]

As part of the Approved Rule Change, OCC added a new Interpretation and Policy .11 to Section 1 of Article V of the By-Laws, providing that clearing members that desire to be designated as an OTC Index Option Clearing Member must execute and maintain in effect such other documents as OCC may prescribe. Among those documents necessary to clear OTC index options on underlying indices published by S&P is the S&P Agreement in such form as specified from time-to-time by S&P, and the form of agreement was attached to the Proposed Rule Change as Exhibit 3.

The proposed changes to the S&P Agreement are generally clarifying and housekeeping in nature. For example, certain typographical errors have been corrected, extraneous words have been deleted, and certain terms have been defined (e.g., ''S&P 500 Index''). Contacts in the S&P Agreement for notice purposes have been updated and the limitation of liability and indemnification provisions have been expanded. As required by OCC By-Laws Article 1, Section V, Interpretation and Policy .11(ii), clearing members that plan to clear OTC index options would be required to execute the new S&P Agreement because it is a prerequisite to being an OTC Index Option Clearing Member that participates in OCC's initiative to clear and settle OTC index options. The S&P Agreement will be made available for review on OCC's Web site.

OCC believes that the proposed rule change is consistent with Section 17A(b)(3)(F) of the Securities Exchange Act of 1934, as amended (the ''Act''),[12]

[5] 15 U.S.C. 78s(b)(1).

[6] 17 CFR 240.19b–4.

[7] 12 U.S.C. 5465(e).

[8] Securities Exchange Act Release No. 67835 (September 12, 2012), 77 FR 57602 (September 18, 2012).

[9] Securities Exchange Act Release No. 67906 (September 21, 2012), 77 FR 59431 (September 27, 2012).

[10] In Amendment No. 1, OCC proposed to amend Article XVII of its By-laws to clarify that Section 6 of that Article, pertaining to OTC Index Options, are inoperative until further notice by OCC, as well as to amend Item 3 of the proposed rule change to clarify that the clearing of OTC Options will not occur until certain enhancements related to longer-tenor options have been approved and implemented.

[11] Securities Exchange Act Release No. 34–68434 (December 14, 2012), 77 FR 75243 (December 19, 2012).

[12] 15 U.S.C. 78q–1(b)(3)(F).

and the rules and regulations thereunder, including Rules 17Ad–22(d)(1) and (2) because by improving the precision and clarity of the rights and obligations specified in the S&P Agreement, which is prerequisite for a clearing member to act as an OTC Index Option Clearing Member, the proposed modifications would help remove impediments to and perfect the mechanism of a national system for the prompt and accurate clearance and settlement of securities transactions,[13] ensure that OCC's rules are reasonably designed to have participation requirements that are objective and publicly disclosed and permit fair and open access,[14] and provide for a well-founded, transparent, and enforceable legal framework.[15] The proposed rule change is not inconsistent with any rules of OCC, including any other rules proposed to be amended.

(B) Clearing Agency's Statement on Burden on Competition

OCC does not believe that the proposed rule change would impact, or impose any burden on competition that is not necessary or appropriate in furtherance of the purposes of the Act.[16] With respect to any burden on competition among clearing agencies, OCC is the only registered clearing agency that performs central counterparty services to the options markets.

Changes to the rules of a clearing agency may have an impact on the participants in a clearing agency and the markets that the clearing agency serves. This proposed rule change affects all of OCC's clearing members desiring to be an OTC Index Option Clearing Member, and OCC believes that the proposed modifications to the S&P Agreement would not unfairly inhibit access to OCC's services or disadvantage or favor any particular user in relationship to another user because the proposed modifications are clarifying and housekeeping in nature and would not impose any additional substantive burden. Any clearing member that seeks to become an OTC Index Options Clearing Member would be required to execute the new version of the S&P Agreement.

For the foregoing reasons, OCC believes that the proposed rule change is in the public interest, would be consistent with the requirements of the Act applicable to clearing agencies, and would not impose a burden on competition that is unnecessary or inappropriate in furtherance of the purposes of the Act because the changes would clarify the meaning of the S&P Agreement in ways that help to promote the purposes of the Act and Rule 17Ad–22 thereunder as described above.

(C) Clearing Agency's Statement on Comments on the Proposed Rule Change Received From Members, Participants, or Others

Written comments on the proposed rule change were not and are not intended to be solicited with respect to the proposed rule change and none have been received.

III. Date of Effectiveness of the Proposed Rule Change and Timing for Commission Action

The foregoing rule change has become effective pursuant to Section 19(b)(3)(A)(i) of the Act[17] and paragraph (f)(i) of Rule 19b–4 thereunder[18] because it constitutes a stated policy, practice, or interpretation with respect to the meaning, administration, or enforcement of an existing rule. OCC states that it will delay the implementation of the rule change until it is deemed certified under CFTC Regulation § 40.6.[19] At any time within 60 days of the filing of the proposed rule change, the Commission summarily may temporarily suspend such rule change if it appears to the Commission that such action is necessary or appropriate in the public interest, for the protection of investors, or otherwise in furtherance of the purposes of the Act.

IV. Solicitation of Comments

Interested persons are invited to submit written data, views and arguments concerning the foregoing, including whether the proposed rule change is consistent with the Act. Comments may be submitted by any of the following methods:

Electronic Comments

- Use the Commission's Internet comment form (*http://www.sec.gov/rules/sro.shtml*); or
- Send an email to *rule-comments@sec.gov*. Please include File Number SR–OCC–2013–07 on the subject line.

Paper Comments

- Send paper comments in triplicate to Elizabeth M. Murphy, Secretary, Securities and Exchange Commission, 100 F Street NE., Washington, DC 20549–1090.

All submissions should refer to File Number SR–OCC–2013–07. This file number should be included on the subject line if email is used. To help the Commission process and review your comments more efficiently, please use only one method. The Commission will post all comments on the Commission's Internet Web site (*http://www.sec.gov/rules/sro.shtml*). Copies of the submission, all subsequent amendments, all written statements with respect to the proposed rule change that are filed with the Commission, and all written communications relating to the proposed rule change between the Commission and any person, other than those that may be withheld from the public in accordance with the provisions of 5 U.S.C. 552, will be available for Web site viewing and printing in the Commission's Public Reference Room, 100 F Street NE., Washington, DC 20549 on official business days between the hours of 10:00 a.m. and 3:00 p.m. Copies of the filing also will be available for inspection and copying at the principal office of OCC and on OCC's Web site: *http://www.theocc.com/components/docs/legal/rules_and_bylaws/sr_occ_13_07.pdf*.

All comments received will be posted without change; the Commission does not edit personal identifying information from submissions. You should submit only information that you wish to make available publicly. All submissions should refer to File Number SR–OCC–2013–07 and should be submitted on or before July 5, 2013.

For the Commission, by the Division of Trading and Markets, pursuant to delegated authority.[20]

Kevin M. O'Neill,

Deputy Secretary.

[FR Doc. 2013–14111 Filed 6–13–13; 8:45 am]

BILLING CODE 8011–01–P

[13] 15 U.S.C. 78q–1(b)(3)(F).

[14] 17 CFR 240.17Ad–22(d)(2).

[15] 17 CFR 240.17Ad–22(d)(1).

[16] 15 U.S.C. 78q–1(b)(3)(I).

[17] 15 U.S.C. 78s(b)(3)(A)(i).

[18] 17 CFR 240.19b–4(f)(1).

[19] 17 CFR 40.6.

[20] 17 CFR 200.30–3(a)(12).

SECURITIES AND EXCHANGE COMMISSION

[Release No. 34–69724; File No. SR–EDGA–2013–15]

Self-Regulatory Organizations; EDGA Exchange, Inc.; Notice of Filing and Immediate Effectiveness of Proposed Rule Change Relating to Amendments to the EDGA Exchange, Inc. Fee Schedule

June 10, 2013.

Pursuant to Section 19(b)(1) of the Securities Exchange Act of 1934 (the

''Act''),[1] and Rule 19b–4 thereunder,[2] notice is hereby given that on June 3, 2013, EDGA Exchange, Inc. (the ''Exchange'' or ''EDGA'') filed with the Securities and Exchange Commission (''Commission'') the proposed rule change as described in Items I, II and III below, which items have been prepared by the self-regulatory organization. The Commission is publishing this notice to solicit comments on the proposed rule change from interested persons.

I. Self-Regulatory Organization's Statement of the Terms of Substance of the Proposed Rule Change

The Exchange proposes to amend its fees and rebates applicable to Members [3] of the Exchange pursuant to EDGA Rule 15.1(a) and (c). All of the changes described herein are applicable to EDGA Members. The text of the proposed rule change is available on the Exchange's Internet Web site at *www.directedge.com,* at the Exchange's principal office, and at the Public Reference Room of the Commission.

II. Self-Regulatory Organization's Statement of the Purpose of, and Statutory Basis for, the Proposed Rule Change

In its filing with the Commission, the self-regulatory organization included statements concerning the purpose of, and basis for, the proposed rule change and discussed any comments it received on the proposed rule change. The text of these statements may be examined at the places specified in Item IV below. The self-regulatory organization has prepared summaries, set forth in sections A, B and C below, of the most significant aspects of such statements.

A. Self-Regulatory Organization's Statement of the Purpose of, and the Statutory Basis for, the Proposed Rule Change

1. Purpose

The Exchange proposes to amend its fees and rebates applicable to Members of the Exchange pursuant to EDGA Rule 15.1(a) and (c) to (1) lower the default [4] rebate at the top of its fee schedule for removing liquidity in securities at or above $1.00 on EDGA from a rebate of $0.0004 per share to a rebate of $0.0003 per share and make conforming changes to removal flags N, W, 6, BB, CR, PR, and XR; (2) make conforming changes to the internalization flags 5, EA and ER; (3) amend the rates in the tiers in Footnote 4 to the Exchange's fee schedule; [5] (4) increase the fee charged from $0.0018 per share to $0.0020 per share for orders that yield Flag RB, which routes to NASDAQ OMX BX (''BX'') and adds liquidity and (5) decrease the rebate from $0.0026 per share to $0.0020 per share for orders that yield Flag RS, which routes to NASDAQ OMX PSX (''PSX'') and adds liquidity.

Lower Default Rebate

The Exchange proposes to lower the default rebate at the top of its fee schedule for removing liquidity in securities at or above $1.00 on EDGA from a rebate of $0.0004 per share to a rebate of $0.0003 per share. This change will also be reflected in the following removal flags: N, W, 6, BB, CR, PR, and XR.

Amendments to Customer Internalization Fees

For customer internalization, which occurs when two orders presented to the Exchange from the same Member (i.e., MPID) are presented separately and not in a paired manner, but nonetheless inadvertently match with one another,[6] the Exchange currently charges $0.0001 per share per side of an execution (for adding liquidity and for removing liquidity) for flags EA, ER, and 5. This charge occurs in lieu of the standard or tiered rebate/removal rates. Therefore, Members currently incur a total transaction cost of $0.0002 per share for both sides of an execution for customer internalization.

In SR–EDGA–2011–14,[7] the Exchange represented that it ''will continue to ensure that the internalization fee is no more favorable than each prevailing maker/taker spread.'' In order to ensure that the internalization fee is no more favorable than the proposed maker/taker spread of $0.0003 for the standard add rate ($0.0006 charge per share) and standard removal rate (proposed $0.0003 rebate per share), the Exchange is proposing to charge $0.00015 per side for customer internalization (flags EA, ER and 5). In each case (both tiered and standard rates), the charge for Members inadvertently matching with themselves is no more favorable than each maker/taker spread. The applicable rate for customer internalization thus allows the Exchange to discourage potential wash sales.

Amendments to Footnote 4

Currently, Footnote 4 to the Exchange's fee schedule lists three tiers that offer a reduced charge of $0.0005 per share (from the default charge of $0.0006 per share) for adding liquidity on EDGA, provided the requirements of one of the tiers are met. The Exchange proposes to amend each of the three tiers in Footnote 4 to further reduce the charge for adding liquidity on EDGA, provided the requirements of one of the three tiers are met, from $0.0005 per share to $0.0004 per share.

Fee Change for Flag RB

In securities priced at or above $1.00, the Exchange currently assesses a fee of $0.0018 per share for Members' orders that yield Flag RB, which routes to BX and adds liquidity. The Exchange proposes to amend its fee schedule to increase this fee to $0.0020 per share for Members' orders that yield Flag RB. The proposed change represents a pass through of the rate that Direct Edge ECN LLC (d/b/a DE Route) (''DE Route''), the Exchange's affiliated routing broker-dealer, is charged for routing orders to BX that add liquidity and do not qualify for a volume tiered discount. When DE Route routes to BX and adds liquidity, it is charged a default fee of $0.0020 per share.[8] DE Route will pass through this rate on BX to the Exchange and the Exchange, in turn, will pass through this rate to its Members. The Exchange notes that the proposed change is in response to BX's May 2013 fee filing with the Securities and Exchange Commission (the ''Commission''), wherein BX increased the rate it charges its customers, such as DE Route, from a charge of $0.0018 per share to a charge of $0.0020 per share for orders that are routed to BX and add liquidity.[9]

Rebate Change for Flag RS

In securities priced at $1.00 or above, the Exchange currently provides a rebate of $0.0026 per share for Members' orders that yield Flag RS, which routes to PSX and adds liquidity. The Exchange proposes to amend its fee

[1] 15 U.S.C. 78s(b)(1).

[2] 17 CFR 240.19b–4.

[3] As defined in Exchange Rule 1.5(n).

[4] ''Default'' refers to the standard rebate provided to Members for orders that remove liquidity from the Exchange absent Members qualifying for additional volume tiered pricing.

[5] References herein to ''Footnotes'' refer only to footnotes on the Exchange's fee schedule and not to footnotes within the current filing.

[6] Members are advised to consult Rule 12.2 respecting fictitious trading.

[7] *See* Securities Exchange Release No. 64393 (May 4, 2011), 76 FR 27370, 27372 (May 11, 2011) (SR–EDGA–2011–14).

[8] The Exchange notes that to the extent DE Route does or does not achieve any volume tiered rebate on BX, its rate for Flag RB will not change. *See* BX Fee Schedule, *http://www.nasdaqtrader.com/Trader.aspx?id=bx_pricing* (charging a default fee of $0.0020 per share for adding displayed liquidity to BX).

[9] *See* Securities Exchange Act Release No. 69522 (May 6, 2013), 78 FR 27464 (May 10, 2013) (SR–BX–2013–034) (amending the default fee BX charges for adding liquidity to the BX order book from $0.0018 per share to $0.0020 per share).

schedule to decrease the rebate it provides Members from $0.0026 per share to $0.0020 per share for Flag RS. The proposed change represents a pass through of the rate that DE Route is rebated for routing orders to PSX that add liquidity and do not qualify for a volume tiered discount.[10] When DE Route routes to PSX and adds liquidity, it is provided a default rebate of $0.0020 per share. DE Route will pass through this rate on PSX to the Exchange and the Exchange, in turn, will pass through this rate to its Members. The Exchange notes that the proposed change is in response to PSX's May 2013 fee filing with the Commission, wherein PSX decreased the rebate it provides its customers, such as DE Route, from a rebate of $0.0026 per share to a rebate of $0.0020 per share for orders that are routed to PSX and add liquidity.[11]

Implementation Date

The Exchange proposes to implement these amendments to its fee schedule on June 3, 2013.

2. Statutory Basis

The Exchange believes that the proposed rule change is consistent with the objectives of Section 6 of the Act,[12] in general, and furthers the objectives of Section 6(b)(4),[13] in particular, as it is designed to provide for the equitable allocation of reasonable dues, fees and other charges among its Members and other persons using its facilities.

Lower Default Rebate

The Exchange believes that its proposal to lower the default rebate for removing liquidity from $0.0004 per share to $0.0003 per share is an equitable allocation of reasonable dues, fees and other charges as it will enable the Exchange to retain additional funds to offset increased administrative, regulatory, and other infrastructure costs associated with operating an exchange. The rate is reasonable because it is comparable to BATS BYX Exchange, Inc.'s (''BYX'') similar rebate of $0.0005 per share for removing liquidity.[14] The Exchange believes that the proposed rebate is non-discriminatory in that it applies uniformly to all Members.

Amendments to Customer Internalization Fees

The Exchange believes that the increased fee for customer internalization from $0.0002 to $0.0003 per share per side of an execution for flags EA, ER (regular trading session) and 5 (pre and post market) represents an equitable allocation of reasonable dues, fees, and other charges as it is designed to discourage Members from inadvertently matching with one another, thereby discouraging potential wash sales. The increased fee also allows the Exchange to offset its administrative, clearing, and other operating costs incurred in executing such trades. Finally, the fee is equitable in that it is consistent[15] with the EDGA fee structure that has a proposed maker/taker spread of $0.0003 per share (where the standard charge to add liquidity on EDGA is $0.0006 per share and the standard fee to remove liquidity is proposed to be $0.0003 per share).

This increased fee per side of an execution on Flags EA, ER, and 5 ($0.00015 per side per share instead of $0.00010 per side per share), yields a total cost of $0.0003, thus making the internalization fee consistent with the current maker/taker spread.[16] The Exchange believes that the proposed rate is non-discriminatory in that it applies uniformly to all Members.

Amendments to Footnote 4

The Exchange believes that its proposal to further reduce the charge for adding liquidity on EDGA (from $0.0005 per share to $0.0004 per share) provided by each of the three tiers in Footnote 4 of the Exchange's fee schedule represents an equitable allocation of reasonable dues, fees, and other charges among Members and other persons using its facilities because the reduced rates are designed to move in lock-step with the default maker/taker spread.

Currently, Members receive a default maker/taker spread of $0.0002 ($0.0006 charge for adding liquidity to EDGA and $0.0004 rebate for removing liquidity from EDGA). The reduced charges currently provided by Footnote 4 (rates of $0.0005 per share for each tier) provides Members with a more beneficial maker/taker spread of $0.0001 per share. By amending the reduced charge provided in Footnote 4 to move in lock-step with the proposed change to the default rebate for removing liquidity from EDGA ($0.0006 charge for adding liquidity to EDGA and proposed rebate of $0.0003 for removing liquidity from EDGA for a spread of $0.0003), the maker/taker spread provided by such reduced charge would remain at $0.0001 (proposed reduced charge of $0.0004 for adding liquidity to EDGA and a proposed rebate of $0.0003 for removing liquidity from EDGA for a spread of $0.0001 per share).

These proposed rates are designed to increase volume on the Exchange and increase potential revenue to the Exchange, and allows the Exchange to spread its administrative and infrastructure costs over a greater number of shares, leading to lower per share costs. These lower per share costs in turn would allow the Exchange to pass on the savings to Members in the form of lower fees. The increased liquidity benefits all investors by deepening EDGA's liquidity pool, offering additional flexibility for all investors to enjoy cost savings, supporting the quality of price discovery, promoting market transparency and improving investor protection. Volume-based discounts such as the ones herein have been widely adopted in the cash equities markets, and are equitable because they are open to all Members on an equal basis and provide discounts that are reasonably related to the value to an exchange's market quality associated with higher levels of market activity, such as higher levels of liquidity provision and introduction of higher volumes of orders into the price and volume discovery processes.

In addition, the reduced rates are reasonable in that they are comparable to BYX's rates for adding liquidity.[17] Lastly, the Exchange believes that the proposed rate is non-discriminatory in that it applies uniformly to all Members.

[10] The Exchange notes that to the extent DE Route does or does not achieve any volume tiered rebate on PSX, its rate for Flag RS will not change. *See* PSX Fee Schedule, *http://www.nasdaqtrader.com/Trader.aspx?id=PSX_pricing* (providing a default rebate of $0.0020 per share for adding displayed liquidity to PSX).

[11] *See* Securities Exchange Act Release No. 69588 (May 15, 2013), 78 FR 29801 (May 21, 2013) (SR–Phlx–2013–51) (amending the default rebate PSX provides for adding displayed liquidity to the PSX order book from $0.0026 per share to $0.0020 per share).

[12] 15 U.S.C. 78f.

[13] 15 U.S.C. 78f(b)(4).

[14] *See* BYX, BATS BYX Exchange Fee Schedule, *http://cdn.batstrading.com/resources/regulation/rule_book/BATS-Exchanges_Fee_Schedules.pdf* (providing a rebate of $0.0005 per share for removing liquidity for executions by members that add a daily average volume of at least 50,000 shares of liquidity on BYX). The Exchange notes that its default rate for removing liquidity applies only when Members meet the conditions of Footnote 1 to the Exchange's fee schedule, which requires Members to add and/or route a minimum ADV of 50,000 shares on EDGA.

[15] In each case, the internalization fee is no more favorable to the Member than each prevailing maker/taker spread.

[16] The Exchange will continue to ensure that the internalization fee is no more favorable than each prevailing maker/taker spread.

[17] *See* BYX, BATS BYX Exchange Fee Schedule, *http://cdn.batstrading.com/resources/regulation/rule_book/BATS-Exchanges_Fee_Schedules.pdf* (charging a range of rates from $0.00045 to $0.0007 for adding displayed liquidity).

Fee Change for Flag RB

The Exchange believes that its proposal to increase the pass through a charge for Members' orders that yield Flag RB from $0.0018 to $0.0020 per share represents an equitable allocation of reasonable dues, fees, and other charges among Members and other persons using its facilities because the Exchange does not levy additional fees or offer additional rebates for orders that it routes to BX through DE Route. Prior to BX's May 2013 fee filing, BX charged DE Route a fee of $0.0018 per share for orders yielding Flag RB, which DE Route passed through to the Exchange and the Exchange passed through to its Members. In BX's May 2013 fee filing, BX increased the rate it charges its customers, such as DE Route, from a charge of $0.0018 per share to a charge of $0.0020 per share for orders that are routed to BX and add liquidity.[18] Therefore, the Exchange believes that the proposed change in Flag RB from a fee of $0.0018 per share to a fee of $0.0020 per share is equitable and reasonable because it accounts for the pricing changes on BX. In addition, the proposal allows the Exchange to continue to charge its Members a pass-through rate for orders that are routed to BX and add liquidity using DE Route. The Exchange notes that routing through DE Route is voluntary. Lastly, the Exchange also believes that the proposed amendment is non-discriminatory because it applies uniformly to all Members.

Rebate Change for Flag RS

The Exchange believes that its proposal to decrease the pass through rebate for Members' orders that yield Flag RS from $0.0026 to $0.0020 per share represents an equitable allocation of reasonable dues, fees, and other charges among Members and other persons using its facilities because the Exchange does not levy additional fees or offer additional rebates for orders that it routes to PSX through DE Route. Prior to PSX's May 2013 fee filing, PSX provided DE Route a rebate of $0.0026 per share for orders yielding Flag RS, which DE Route passed through to the Exchange and the Exchange passed through to its Members. In PSX's May 2013 fee filing, PSX decreased the rebate it provides its customers, such as DE Route, from a rebate of $0.0026 per share to a rebate of $0.0020 per share for orders that are routed to PSX and add liquidity.[19] Therefore, the Exchange believes that the proposed decrease in rebate from $0.0026 per share to a rebate of $0.0020 per share for orders that yield Flag RS is equitable and reasonable because it accounts for the pricing changes on PSX. In addition, the proposal allows the Exchange to continue to charge its Members a pass-through rate for orders that are routed to PSX and add liquidity using DE Route. The Exchange notes that routing through DE Route is voluntary. Lastly, the Exchange also believes that the proposed amendment is non-discriminatory because it applies uniformly to all Members.

B. Self-Regulatory Organization's Statement on Burden on Competition

These proposed rule changes do not impose any burden on competition that is not necessary or appropriate in furtherance of the purposes of the Act. The Exchange does not believe that any of these changes represent a significant departure from previous pricing offered by the Exchange or pricing offered by any of the Exchange's competitors. Additionally, Members may opt to disfavor the Exchange's pricing if they believe that alternatives offer them better value. Accordingly, the Exchange believes that the proposed changes would not impair the ability of Members or competing venues to maintain their competitive standing in the financial markets.

The Exchange believes that its proposal to lower the default rebate for removing liquidity from EDGA from $0.0004 per share to $0.0003 per share will also assist in increasing competition in that its proposed rebate is comparable to rebates for adding liquidity offered by BYX's rebate of $0.0005 per share for removing liquidity.[20]

The Exchange believes that its internalization rates for securities priced $1.00 and above will also not burden intermarket or intramarket competition as the proposed rates are no more favorable than Members achieving the maker/taker spreads between the default add and remove rates on EDGA.

The Exchange believes that its proposal to amend the reduced rates provided in the tiers in Footnote 4 of its fee schedule increases competition because the proposed rates are comparable to the rates charged by BYX for orders that add liquidity.[21] The Exchange believes that its proposal will have no burden on intramarket competition as the rates apply uniformly to all Members.

The Exchange believes that its proposal to pass through a charge of $0.0020 per share for Members' orders that yield Flag RB would increase intermarket competition because it offers customers an alternative means to route to BX and add liquidity for the same price as entering orders on BX directly. The Exchange believes that its proposal would not burden intramarket competition because the proposed rate would apply uniformly to all Members.

The Exchange believes that its proposal to pass through a rebate of $0.0020 per share for Members' orders that yield Flag RS would increase intermarket competition because it offers customers an alternative means to route to PSX and add liquidity for the same price as entering orders on PSX directly. The Exchange believes that its proposal would not burden intramarket competition because the proposed rate would apply uniformly to all Members.

The Exchange believes that its proposal would increase competition for routing services because the market for order execution is competitive and the Exchange's proposal provides customers with another alternative to route their orders. The Exchange notes that routing through DE Route is voluntary.

C. Self-Regulatory Organization's Statement on Comments on the Proposed Rule Change Received From Members, Participants, or Others

The Exchange has not solicited, and does not intend to solicit, comments on this proposed rule change. The Exchange has not received any unsolicited written comments from Members or other interested parties.

III. Date of Effectiveness of the Proposed Rule Change and Timing for Commission Action

The foregoing rule change has become effective pursuant to Section 19(b)(3)(A)

[18] *See* Securities Exchange Act Release No. 69522 (May 6, 2013), 78 FR 27464 (May 10, 2013) (SR–BX–2013–034) (amending the default fee BX charges for adding liquidity to the BX order book from $0.0018 per share to $0.0020 per share).

[19] *See* Securities Exchange Act Release No. 69588 (May 15, 2013) (SR–Phlx–2013–51) (amending the default rebate PSX provides for adding displayed liquidity to the PSX order book from $0.0026 per share to $0.0020 per share).

[20] *See* BYX, BATS BYX Exchange Fee Schedule, *http://cdn.batstrading.com/resources/regulation/rule_book/BATS-Exchanges_Fee_Schedules.pdf* (providing a rebate of $0.0005 per share for removing liquidity for executions by members that add a daily average volume of at least 50,000 shares of liquidity on BYX). The Exchange notes that its default rate for removing liquidity applies only when Members meet the conditions of Footnote 1 to the Exchange's fee schedule, which requires Members to add and/or route a minimum ADV of 50,000 shares on EDGA.

[21] *See* BYX, BATS BYX Exchange Fee Schedule, *http://cdn.batstrading.com/resources/regulation/rule_book/BATS-Exchanges_Fee_Schedules.pdf* (charging $0.0006 per share for adding displayed liquidity for all executions other than those that set the NBBO for members who have an ADV equal to or greater than 0.25% but less than 0.5% of average total consolidated volume).

of the Act [22] and Rule 19b–4(f)(2) [23] thereunder. At any time within 60 days of the filing of such proposed rule change, the Commission summarily may temporarily suspend such rule change if it appears to the Commission that such action is necessary or appropriate in the public interest, for the protection of investors, or otherwise in furtherance of the purposes of the Act.

IV. Solicitation of Comments

Interested persons are invited to submit written data, views, and arguments concerning the foregoing, including whether the proposed rule change is consistent with the Act. Comments may be submitted by any of the following methods:

Electronic Comments

- Use the Commission's Internet comment form (*http://www.sec.gov/rules/sro.shtml*); or
- Send an email to *rule-comments@sec.gov.* Please include File Number SR–EDGA–2013–15 on the subject line.

Paper Comments

- Send paper comments in triplicate to Elizabeth M. Murphy, Secretary, Securities and Exchange Commission, 100 F Street NE., Washington, DC 20549–1090.

All submissions should refer to File Number SR–EDGA–2013–15. This file number should be included on the subject line if email is used. To help the Commission process and review your comments more efficiently, please use only one method. The Commission will post all comments on the Commission's Internet Web site (*http://www.sec.gov/rules/sro.shtml*). Copies of the submission, all subsequent amendments, all written statements with respect to the proposed rule change that are filed with the Commission, and all written communications relating to the proposed rule change between the Commission and any person, other than those that may be withheld from the public in accordance with the provisions of 5 U.S.C. 552, will be available for Web site viewing and printing in the Commission's Public Reference Room, 100 F Street NE., Washington, DC 20549, on official business days between the hours of 10:00 a.m. and 3:00 p.m. Copies of the filing also will be available for inspection and copying at the principal office of the Exchange. All comments received will be posted without change; the Commission does not edit personal identifying information from submissions. You should submit only information that you wish to make available publicly. All submissions should refer to File Number SR–EDGA–2013–15 and should be submitted on or before July 5, 2013.

For the Commission, by the Division of Trading and Markets, pursuant to delegated authority.[24]

Kevin M. O'Neill,

Deputy Secretary.

[FR Doc. 2013–14113 Filed 6–13–13; 8:45 am]

BILLING CODE 8011–01–P

[22] 15 U.S.C. 78s(b)(3)(A).

[23] 17 CFR 240.19b–4(f)(2).

[24] 17 CFR 200.30–3(a)(12).

SMALL BUSINESS ADMINISTRATION

[Disaster Declaration #13614 and #13615]

Illinois Disaster #IL–00042

AGENCY: U.S. Small Business Administration.

ACTION: Notice.

SUMMARY: This is a Notice of the Presidential declaration of a major disaster for Public Assistance Only for the State of Illinois (FEMA–4116–DR), dated 06/06/2013.

Incident: Severe Storms, Straight-line Winds and Flooding.

Incident Period: 04/16/2013 through 05/05/2013.

Effective Date: 06/06/2013.

Physical Loan Application Deadline Date: 08/05/2013.

Economic Injury (EIDL) Loan Application Deadline Date: 03/06/2014.

ADDRESSES: Submit completed loan applications to: U.S. Small Business Administration, Processing and Disbursement Center, 14925 Kingsport Road, Fort Worth, TX 76155.

FOR FURTHER INFORMATION CONTACT: A. Escobar, Office of Disaster Assistance, U.S. Small Business Administration, 409 3rd Street SW., Suite 6050, Washington, DC 20416.

SUPPLEMENTARY INFORMATION: Notice is hereby given that as a result of the President's major disaster declaration on 06/06/2013, Private Non-Profit organizations that provide essential services of governmental nature may file disaster loan applications at the address listed above or other locally announced locations.

The following areas have been determined to be adversely affected by the disaster:

Primary Counties: Adams, Bureau, Clark, Crawford, Dupage, Fulton, Grundy, Henderson, Kendall, Knox, La Salle, Lake, Livingston, Marshall, Mason, Mchenry, Mercer, Ogle, Pike, Putnam, Rock Island, Stark, Warren, Woodford.

The Interest Rates are:

	Percent
For Physical Damage:	
Non-Profit Organizations With Credit Available Elsewhere ...	2.875
Non-Profit Organizations Without Credit Available Elsewhere	2.875
For Economic Injury:	
Non-Profit Organizations Without Credit Available Elsewhere	2.875

The number assigned to this disaster for physical damage is 136146 and for economic injury is 136156.

(Catalog of Federal Domestic Assistance Numbers 59002 and 59008)

James E. Rivera,

Associate Administrator for Disaster Assistance.

[FR Doc. 2013–14084 Filed 6–13–13; 8:45 am]

BILLING CODE 8025–01–P

SMALL BUSINESS ADMINISTRATION

[Disaster Declaration #13605 and #13606]

Iowa Disaster #IA–00052

AGENCY: U.S. Small Business Administration.

ACTION: Notice.

SUMMARY: This is a Notice of the Presidential declaration of a major disaster for Public Assistance Only for the State of Iowa (FEMA–4119–DR), dated 05/31/2013.

Incident: Severe Storms, Straight-line Winds, and Flooding.

Incident Period: 04/17/2013 through 04/30/2013.

Effective Date: 05/31/2013.

Physical Loan Application Deadline Date: 07/30/2013.

Economic Injury (EIDL) Loan Application Deadline Date: 03/03/2014.

ADDRESSES: Submit completed loan applications to: U.S. Small Business Administration, Processing and Disbursement Center, 14925 Kingsport Road, Fort Worth, TX 76155.

FOR FURTHER INFORMATION CONTACT: A. Escobar, Office of Disaster Assistance, U.S. Small Business Administration, 409 3rd Street SW., Suite 6050, Washington, DC 20416.

SUPPLEMENTARY INFORMATION: Notice is hereby given that as a result of the President's major disaster declaration on 05/31/2013, Private Non-Profit organizations that provide essential

services of governmental nature may file disaster loan applications at the address listed above or other locally announced locations.

The following areas have been determined to be adversely affected by the disaster:

Primary Counties: Appanoose, Cedar, Clinton, Davis, Decatur, Des Moines, Iowa, Johnson, Keokuk, Lee, Lucas, Marion, Monroe, Muscatine, Ringgold, Van Buren, Wapello, Warren, Wayne.

The Interest Rates are:

	Percent
For Physical Damage:	
Non-Profit Organizations With Credit Available Elsewhere ...	2.875
Non-Profit Organizations Without Credit Available Elsewhere	2.875
For Economic Injury:	
Non-Profit Organizations Without Credit Available Elsewhere	2.875

The number assigned to this disaster for physical damage is 13605B and for economic injury is 13606B.

(Catalog of Federal Domestic Assistance Numbers 59002 and 59008)

James E. Rivera,

Associate Administrator for Disaster Assistance.

[FR Doc. 2013–14086 Filed 6–13–13; 8:45 am]

BILLING CODE 8025–01–P

SMALL BUSINESS ADMINISTRATION

Region VII Regulatory Fairness Board; Federal Regulatory Enforcement Fairness Hearing

AGENCY: U.S. Small Business Administration (SBA).

ACTION: Notice of open meeting of the Regional (Region VII) Small Business Regulatory Fairness Board.

SUMMARY: The (SBA) Office of the National Ombudsman is issuing this notice to announce the location, date and time of the Regional Small Business Regulatory Fairness hearing. This meeting is open to the public.

DATES: The hearing will be held on Friday, June 21, 2013 from 9:00 a.m. to 11:30 a.m. (CST).

ADDRESSES: The meeting will be at Modern Woodmen Park—Business Center, 209 S. Gaines Street, Davenport, IA 52802–1403.

SUPPLEMENTARY INFORMATION: Pursuant to the Small Business Regulatory Enforcement Fairness Act (Pub. L. 104–121), Sec. 222, SBA announces the meeting for Business Organizations, Trade Associations, Chambers of Commerce and related organizations serving small business concerns to report experiences regarding unfair or excessive Federal regulatory enforcement issues affecting their members.

FOR FURTHER INFORMATION CONTACT: The meeting is open to the public; however, advance notice of attendance is requested. Anyone wishing to attend and/or make a presentation to the Region VII Regulatory Fairness Board must contact Jeanna Trenkamp by June 17, 2013 in writing, by fax or email in order to be placed on the agenda. Jeanna Trenkamp, Program & Events Coordinator, Quad Cities Chamber of Commerce, 130 West Second Street, Davenport, IA 52801, phone (563) 823–2692 and fax (309) 757–5435, email: *jtrenkamp@quadcitieschamber.com.* Additionally, if you need accommodations because of a disability or require additional information, please contact José Méndez as well.

For more information on the Office of the National Ombudsman, see our Web site at *www.sba.gov/ombudsman.*

Dated: June 6, 2013.

Dan Jones,

SBA Committee Management Officer.

[FR Doc. 2013–14081 Filed 6–13–13; 8:45 am]

BILLING CODE 8025–01–P

SOCIAL SECURITY ADMINISTRATION

[Docket No. SSA–2013–0028]

Notice of Senior Executive Service Performance Review Board Membership

AGENCY: Social Security Administration.

ACTION: Notice of Senior Executive Service Performance Review Board Membership.

Title 5, U.S. Code, 4314 (c)(4), requires that the appointment of Performance Review Board members be published in the **Federal Register** before service on said Board begins.

The following persons will serve on the Performance Review Board which oversees the evaluation of performance appraisals of Senior Executive Service members of the Social Security Administration:

Seth Binstock*
Donna Calvert*
Brad Flick
Hyacinth Hinojosa*
James Julian
Lydia Marshall*
Royce Min*
Van Nguyen
DeBorah Russell
Vance Teel
Amy Thompson*
Laura Train*
*New Member

Reginald F. Wells,

Deputy Commissioner for Human Resources.

[FR Doc. 2013–14200 Filed 6–13–13; 8:45 am]

BILLING CODE 4191–02–P

DEPARTMENT OF STATE

[Public Notice 8356]

60-Day Notice of Proposed Information Collection: Application To Determine Returning Resident Status

ACTION: Notice of request for public comment.

SUMMARY: The Department of State is seeking Office of Management and Budget (OMB) approval for the information collection described below. In accordance with the Paperwork Reduction Act of 1995, we are requesting comments on this collection from all interested individuals and organizations. The purpose of this notice is to allow 60 days for public comment preceding submission of the collection to OMB.

DATES: The Department will accept comments from the public up to August 13, 2013.

ADDRESSES: You may submit comments by any of the following methods:

- *Web:* Persons with access to the Internet may use the Federal Docket Management System (FDMS) to comment on this notice by going to *www.Regulations.gov.* You can search for the document by entering ''Public Notice 8356'' in the Search bar. If necessary, use the Narrow by Agency filter option on the Results page.
- *Email: PRA_BurdenComments@state.gov.*
- *Mail:* Chief, Legislation and Regulations Division, Visa Services—DS–0117, 2401 E Street NW., Washington, DC 20520–30106.

You must include the DS form number (if applicable), information collection title, and the OMB control number in any correspondence.

FOR FURTHER INFORMATION CONTACT: Direct requests for additional information regarding the collection listed in this notice, including requests for copies of the proposed collection instrument and supporting documents, to Sydney Taylor, Visa Services, U.S. Department of State, 2401 E Street NW., L–603, Washington, DC 20522, who may

be reached at *PRA_BurdenComments@state.gov.*

SUPPLEMENTARY INFORMATION:

- *Title of Information Collection:* Application to Determine Returning Resident Status.
- *OMB Control Number:* 1405–0091.
- *Type of Request:* Extension of a Currently Approved Collection.
- *Originating Office:* CA/VO/L/R.
- *Form Number:* DS–0117.
- *Respondents:* Aliens applying for special immigrant classification as a returning resident.
- *Estimated Number of Respondents:* 1,005 applicants per year.
- *Estimated Number of Responses:* 1,005 applicants per year.
- *Average Time per Response:* 30 minutes.
- *Total Estimated Burden Time:* 502.5 hours.
- *Frequency:* Once per respondent.
- *Obligation to Respond:* Required to Obtain or Retain a Benefit.

We are soliciting public comments to permit the Department to:

- Evaluate whether the proposed information collection is necessary for the proper functions of the Department.
- Evaluate the accuracy of our estimate of the time and cost burden for this proposed collection, including the validity of the methodology and assumptions used.
- Enhance the quality, utility, and clarity of the information to be collected.
- Minimize the reporting burden on those who are to respond, including the use of automated collection techniques or other forms of information technology.

Please note that comments submitted in response to this Notice are public record. Before including any detailed personal information, you should be aware that your comments as submitted, including your personal information, will be available for public review.

Abstract of proposed collection:

Under INA Section 101(a)(27)(A)[8 U.S.C. 1101], Form DS–0117 is used by consular officers to determine the eligibility of an alien applicant for special immigrant status as a returning resident.

Methodology:

The DS–0117 is available online. Applicants will fill out the application online, print the form, and submit the DS–0117 during their interview at a Consular Post.

Dated: June 4, 2013.

Edward Ramotoskwi,

Deputy Assistant Secretary, Bureau of Consular Affairs, Department of State.

[FR Doc. 2013–14197 Filed 6–13–13; 8:45 am]

BILLING CODE 4710–06–P

DEPARTMENT OF STATE

[Public Notice 8354]

30-Day Notice of Proposed Information Collection: Export Declaration of Defense Technical Data or Services

ACTION: Notice of request for public comment and submission to OMB of proposed collection of information.

SUMMARY: The Department of State has submitted the information collection described below to the Office of Management and Budget (OMB) for approval. In accordance with the Paperwork Reduction Act of 1995 we are requesting comments on this collection from all interested individuals and organizations. The purpose of this notice is to allow 30 days for public comment.

DATES: Submit comments to OMB up to July 15, 2013.

ADDRESSES: Direct comments to the Department of State Desk Officer in the Office of Information and Regulatory Affairs at the Office of Management and Budget (OMB). You may submit comments by the following methods:

- *Email:* *oira_submission@omb.eop.gov.* You must include the DS form number, information collection title, and OMB control number in the subject line of your message.
- *Fax:* 202–395–5806. Attention: Desk Officer for Department of State.

FOR FURTHER INFORMATION CONTACT: Direct requests for additional information regarding the collections listed in this notice, including requests for copies of the proposed collection instrument and supporting documents, to Nicholas Memos, PM/DDTC, SA–1, 12th Floor, Directorate of Defense Trade Controls, Bureau of Political-Military Affairs, U.S. Department of State, Washington, DC 20522–0112, who may be reached via phone at (202) 663–2829, or via email at *memosni@state.gov.*

SUPPLEMENTARY INFORMATION:

- *Title of Information Collection:* Export Declaration of Defense Technical Data or Services.
- *OMB Control Number:* 1405–0157.
- *Type of Request:* Extension of Currently Approved Collection.
- *Originating Office:* Bureau of Political-Military Affairs, Directorate of Defense Trade Controls, PM/DDTC.
- *Form Number:* DS–4071.
- *Respondents:* Business and Nonprofit Organizations
- *Estimated Number of Respondents:* 12,000.
- *Estimated Number of Responses:* 18,000.
- *Average Hours per Response:* 30 minutes.
- *Total Estimated Burden:* 9,000 hours.
- *Frequency:* On Occasion.
- *Obligation To Respond:* Mandatory.

We are soliciting public comments to permit the Department to:

- Evaluate whether the proposed information collection is necessary for the proper functions of the Department.
- Evaluate the accuracy of our estimate of the time and cost burden for this proposed collection, including the validity of the methodology and assumptions used.
- Enhance the quality, utility, and clarity of the information to be collected.
- Minimize the reporting burden on those who are to respond, including the use of automated collection techniques or other forms of information technology.

Please note that comments submitted in response to this Notice are public record. Before including any detailed personal information, you should be aware that your comments as submitted, including your personal information, will be available for public review.

Abstract of proposed collection: The export, temporary import, temporary export and brokering of defense articles, defense services and related technical data are licensed by the Directorate of Defense Trade Controls (DDTC) in accordance with the International Traffic in Arms Regulations (ITAR, 22 CFR Parts 120–130) and Section 38 of the Arms Export Control Act. Any person who engages in the business of manufacturing or exporting defense articles, defense services, and related technical data, or the brokering thereof, must register with the Department of State.

Actual export of defense technical data and defense services must be reported directly to DDTC. DDTC administers the ITAR and Section 38 of the Arms Export Control Act (AECA). The actual exports must be in accordance with requirements of the ITAR and section 38 of the AECA. DDTC monitors the information submitted pursuant to this collection to ensure there is proper control of the transfer of sensitive U.S. technology.

Methodology: This information collection may be sent to the Directorate of Defense Trade Controls via the following methods: Electronically or mail.

Dated: May 16, 2013.

Candace M.J. Goforth,

Director of Defense Trade Controls Policy, Bureau of Political-Military Affairs, U.S. Department of State.

[FR Doc. 2013–14199 Filed 6–13–13; 8:45 am]

BILLING CODE 4710–25–P

DEPARTMENT OF TRANSPORTATION

Federal Aviation Administration

Public Notice for Waiver of Aeronautical Land-Use Assurance

AGENCY: Federal Aviation Administration (FAA), DOT.

ACTION: Notice of intent of waiver with respect to land; Quad City International Airport, Moline, Illinois.

SUMMARY: The FAA is considering a proposal to change a 3.03-acre portion of Parcel AA of airport land from aeronautical use to non-aeronautical use (for lease), located at Quad City International Airport, Moline, Illinois.

The subject 3.03-acre portion of Parcel AA (10.84 total acres) is located in the north quadrant of the airport along Airport Drive and currently not being used directly for aeronautical purposes other than for the protection of FAR Part 77 surfaces and compatible land use. The change from aeronautical to non-aeronautical use would allow the construction of a hotel on the subject 3.03-acre parcel. The aforementioned land is not needed for aeronautical use.

DATES: Comments must be received on or before July 15, 2013.

ADDRESSES: Documents are available for review by prior appointment at the FAA Airports District Office, Mr. Richard Pur, Airports Engineer, Federal Aviation Administration, Chicago Airports District Office, 2300 East Devon Avenue, Des Plaines, Illinois 60018. Telephone: (847) 294–7527/Fax: (847) 294–7046, and Metropolitan Airport Authority of Rock Island County, 2200 69th Avenue, Moline, Illinois 61265, and (309) 757–1732.

Written comments on the Sponsor's request must be delivered or mailed to: Mr. Richard Pur, Airports Engineer, Federal Aviation Administration, Chicago Airports District Office, 2300 East Devon Avenue, Des Plaines, Illinois 60018. Telephone: (847) 294–7527/Fax: (847) 294–7046.

FOR FURTHER INFORMATION CONTACT: Mr. Richard Pur, Airports Engineer, Federal Aviation Administration, Chicago Airports District Office, 2300 East Devon Avenue, Des Plaines, Illinois 60018. Telephone: (847) 294–7527/Fax: (847) 294–7046.

SUPPLEMENTARY INFORMATION: In accordance with section 47107(h) of Title 49, United States Code, this notice is required to be published in the **Federal Register** 30 days before modifying the land-use assurance that requires the property to be used for an aeronautical purpose.

Existing Parcel AA was originally acquired under FAAP Grant 9–11–024–C309 in June, 1962, with the subject portion of Parcel AA currently used for FAR Part 77 protection and to ensure compatible land use. The Metropolitan Airport Authority plans to allow the construction of a hotel on the subject property. Fair Market Value will be obtained from a long term lease with hotel owner.

The use of the revenue generated from the lease of the airport property will be in accordance with FAA's Policy and Procedures Concerning the Use of Airport Revenue, published in the **Federal Register** on February 16, 1999 (64 FR 7696).

This notice announces that the FAA is considering the release of the subject airport property at the Quad City International Airport, Moline, Illinois from its obligations to be maintained for aeronautical purposes. Approval does not constitute a commitment by the FAA to financially assist in the disposal of the subject airport property nor a determination of eligibility for grant-in-aid funding from the FAA.

Subject Portion of Parcel AA (Legal Description)

Part of Outlots 2 and 3 of Valley View Place, and addition situated in the Southeast Quarter of the Southwest Quarter of Section 16 and the Northeast Quarter of the Northwest Quarter of Section 21 all in Township 17 North, Range 1 West of the Fourth Principal Meridian in Rock Island County, Illinois, said Part being further described as follows:

Commencing at the Northwest Corner of the said Outlot 2, thence 00 degree 33 minutes 51 seconds West along the West line of said Outlot 2 a distance of 69.93 feet to a point on the South Right of Way Line of 69th Avenue (F.A. Route 10/F.A.U. Route 5788); thence South 73 degrees 22 minutes 14 seconds East along the said South Right of Way Line a distance of 35.28 feet to the point of Beginning; thence continuing South 73 degrees 22 minutes 14 seconds along said South Right of Way line a distance of 257.25 feet; thence South 56 degrees 53 minutes 02 seconds East along the said South Right of Way line a distance of 308.50 feet; thence South 41 degrees 10 minutes 02 seconds West a distance of 249.27 feet; thence North 66 degrees 41 minutes 12 seconds West a distance of 212.85 feet; thence North 89 degrees 42 minutes 30 seconds West a distance of 149.12 feet; thence North 00 degree 37 minutes 50 seconds East a distance of 344.83 feet to the Point of Beginning, containing 3.027 acres more or less.

Basis of bearings are to the West line of said Outlot 2 South 00 degree 33 minutes 51 seconds West to the Illinois State Plane Coordinate System, West Zone (NAD 83).

Issued in Des Plaines, Illinois, on May 15, 2013.

James G. Keefer,

Manager, Chicago Airports District Office, FAA, Great Lakes Region.

[FR Doc. 2013–14067 Filed 6–13–13; 8:45 am]

BILLING CODE 4910–13–P

DEPARTMENT OF TRANSPORTATION

Federal Railroad Administration

[Docket Number FRA–2013–0055]

Petition for Waiver of Compliance

In accordance with Part 211 of Title 49 Code of Federal Regulations (CFR), this document provides the public notice that by a document dated May 16, 2013, the Commuter Rail Division of the Regional Transportation Authority (Metra) and its operating company, the Northeast Illinois Regional Commuter Railroad Corporation, have petitioned the Federal Railroad Administration (FRA) for a waiver of compliance from certain provisions of the Federal railroad safety regulations contained at 49 CFR Part 236—Rules, Standards, and Instructions Governing the Installation, Inspection, Maintenance, and Repair of Signal and Train Control Systems, Devices, and Appliances. FRA assigned the petition Docket Number FRA–2013–0055.

Metra seeks a waiver from the requirements 49 CFR 236.566, *Locomotive of each train operating in train stop, train control or cab signal territory; equipped.* Specifically, Metra seeks FRA's approval to operate equipped Metra Heritage Corridor District (HCD) trains on Metra's Rock Island District (RID) from Joliet Coach Yard at Control Point (CP) Richards, Milepost (MP) 39.9 to the switch at the wye at UD Tower, MP 40.1 with the cab signals cut out.

This petition for waiver is requested because HCD trains are positioned overnight at the Joliet Coach Yard on the RID. The RID automatic cab signal (ACS) territory begins at Joliet, MP 40.2, and ends at Blue Island, MP 14.5. Metra's HCD trains operate on nonequipped territory, which begins in

Joliet, MP 37.3, and ends at Chicago Union Station, MP 0.0. The affected trains would operate out of Joliet Yard with cab signals cut out for 1,100 feet up to the wye at UD Tower. To operate with cab signals on HCD trains would require Metra to train approximately 20 engineers on cab signal indications. In order for Metra to test HCD trains, a test loop would need to be installed at Joliet for trains operating in equipped territory less than 1,100 feet. Metra proposes that movement between CP Richards and the wye at UD Tower for HCD trains with the cab signals cut out will be made with an absolute block established in advance of all HCD trains. Additionally, the HCD trains movements will be made at restricted speed across the equipped territory.

A copy of the petition, as well as any written communications concerning the petition, is available for review online at *www.regulations.gov* and in person at the U.S. Department of Transportation's Docket Operations Facility, 1200 New Jersey Avenue SE., W12–140, Washington, DC 20590. The Docket Operations Facility is open from 9 a.m. to 5 p.m., Monday through Friday, except Federal Holidays.

Interested parties are invited to participate in these proceedings by submitting written views, data, or comments. FRA does not anticipate scheduling a public hearing in connection with these proceedings since the facts do not appear to warrant a hearing. If any interested party desires an opportunity for oral comment, they should notify FRA, in writing, before the end of the comment period and specify the basis for their request.

All communications concerning these proceedings should identify the appropriate docket number and may be submitted by any of the following methods:

- *Web site: http://www.regulations.gov*. Follow the online instructions for submitting comments.
- *Fax:* 202–493–2251.
- *Mail:* Docket Operations Facility, U.S. Department of Transportation, 1200 New Jersey Avenue SE., W12–140, Washington, DC 20590.
- *Hand Delivery:* 1200 New Jersey Avenue SE., Room W12–140, Washington, DC 20590, between 9 a.m. and 5 p.m., Monday through Friday, except Federal Holidays.

Communications received by July 29, 2013 will be considered by FRA before final action is taken. Comments received after that date will be considered as far as practicable.

Anyone is able to search the electronic form of any written communications and comments received into any of our dockets by the name of the individual submitting the comment (or signing the document, if submitted on behalf of an association, business, labor union, etc.). See *http://www.regulations.gov/#!privacyNotice* for the privacy notice of regulations.gov or interested parties may review DOT's complete Privacy Act Statement in the **Federal Register** published on April 11, 2000 (65 FR 19477).

Issued in Washington, DC, on June 10, 2013.

Robert C. Lauby,

Deputy Associate Administrator for Regulatory and Legislative Operations.

[FR Doc. 2013–14090 Filed 6–13–13; 8:45 am]

BILLING CODE 4910–06–P

DEPARTMENT OF TRANSPORTATION

Maritime Administration

[Docket No. USCG–2013–0363]

Deepwater Port License Application: Liberty Natural Gas, LLC, Port Ambrose Deepwater Port

AGENCY: Maritime Administration, Department of Transportation.

ACTION: Notice of Application.

SUMMARY: The Maritime Administration (MarAd) and the U.S. Coast Guard (USCG) announce they have received an application for the licensing of a liquefied natural gas deepwater port and that the application contains the required information. This notice summarizes the applicant's plans and the procedures that will be followed in considering the application.

DATES: The Deepwater Port Act of 1974, as amended, requires any public hearing(s) on this application to be held not later than 240 days after publication of this notice, and a decision on the application not later than 90 days after the final public hearing.

ADDRESSES: The public docket for USCG–2013–0363 is maintained by the U.S. Department of Transportation, Docket Management Facility, West Building, Ground Floor, Room W12–140, 1200 New Jersey Avenue SE., Washington, DC 20590. The Federal Docket Management Facility accepts hand-delivered submissions, and makes docket contents available for public inspection and copying at this address between 9 a.m. and 5 p.m., Monday through Friday, except Federal holidays. The Federal Docket Management Facility's telephone number is 202–366–9329, the fax number is 202–493–2251 and the Web site for electronic submissions or for electronic access to docket contents is *http://www.regulations.gov.*

FOR FURTHER INFORMATION CONTACT: Mr. Roddy Bachman, U.S. Coast Guard, telephone: 202–372–1451, email: *Roddy.C.Bachman@uscg.mil* or Ms. Tracey Ford, Maritime Administration, telephone: 202–366–0321, email: *Tracey.Ford@dot.gov.* For questions regarding viewing the Docket, call Ms. Barbara Hairston, Program Manager, Docket Operations, telephone: 202–366–9826.

SUPPLEMENTARY INFORMATION:

Receipt of Application

On September 28, 2012, MarAd and USCG received an application from Liberty Natural Gas, LLC for all Federal authorizations required for a license to own, construct, and operate a deepwater port authorized under the Deepwater Port Act of 1974, as amended, 33 U.S.C. 1501 *et seq.* (the Act). The application contains all information required by the Act to initiate the licensing review and approval process.

Background

According to the Act, a deepwater port is a fixed or floating man-made structure other than a vessel, or a group of structures, including all components and equipment, including pipelines, pumping or compressor stations, service platforms, buoys, mooring lines, and similar facilities that are proposed as part of a deepwater port, located beyond State seaward boundaries and used or intended for use as a port or terminal for the transportation, storage, and further handling of oil or natural gas for transportation to, or from, any State.[1]

The Maritime Administrator possesses the authority to license a deepwater port (by delegation from the Secretary of Transportation, published on June 18, 2003 [68 FR 36496]). Statutory and regulatory requirements for licensing appear in 33 U.S.C. 1501 *et seq.* and 33 CFR part 148. Under delegations from, and agreements between, the Secretary of Transportation and the Secretary of Homeland Security, applications are jointly processed by MarAd and USCG. Each application is considered on its merits.

In accordance with 33 U.S.C. 1504(f) for all applications, MarAd and USCG,

[1] On December 20, 2012, the Coast Guard and Maritime Transportation Act of 2012 (Title III, Sec. 312) amended Section 3(9)(A) of the Deepwater Port Act of 1974 (33 U.S.C. 1502(9)(A) to insert the words ''or from'' before the words ''any State'' in the definition of Deepwater Port. This amendment grants MarAd the authority to license the construction of Deepwater Ports for the export of oil and natural gas from domestic sources within the United States to foreign markets abroad.

working in cooperation with other Federal agencies and departments, shall comply with the National Environmental Policy Act (NEPA) of 1969 (42 U.S.C. 4321 *et seq.*). The U.S. Environmental Protection Agency (EPA) and the U.S. Army Corps of Engineers (USACE), among others, are cooperating agencies and will assist in the NEPA process as described in 40 CFR 1501.6; will participate in scoping meeting(s); and will incorporate the Environmental Impact Statement (EIS) into their permitting processes. Comments addressed to the EPA, USACE, or other federal cooperating agencies will be incorporated into the Department of Transportation (DOT) docket and considered as the EIS is developed to ensure consistency with the NEPA process.

MarAd, in issuing this Notice of Application pursuant to section 1504(c) of the Act, must designate as an ''Adjacent Coastal State'' any coastal state which (A) would be directly connected by pipeline to a deepwater port as proposed in an application, or (B) would be located within 15 miles of any such proposed deepwater port (see 33 U.S.C. 1508(a)(1)). On April 30, 2013, MarAd issued a Notice of Policy Clarification Concerning the Designation of Adjacent Coastal States for Deepwater Port License Applications in the **Federal Register** (78 FR 25349–25351) advising the public that nautical miles shall be used when determining Adjacent Coastal State status. Pursuant to the criteria provided in the Act, New York and New Jersey are the Adjacent Coastal States for this application. Other states may apply for Adjacent Coastal State status in accordance with 33 U.S.C. 1508(a)(2).

The Act directs that at least one public hearing take place in each Adjacent Coastal State, in this case, New York and New Jersey. Additional public meetings may be conducted to solicit comments for the environmental analysis to include public scoping meetings, or meetings to discuss the Draft EIS and the Final EIS.

MarAd and USCG will publish additional **Federal Register** notices with information regarding these public meeting(s) and hearing(s) and other procedural milestones, including the NEPA environmental review. The Maritime Administrator's decision, and other key documents, will be filed in the public docket.

The Deepwater Port Act imposes a strict timeline for processing an application. When MarAd and USCG determine that an application contains the required information, the Act directs that all public hearings on the application be concluded within 240 days after publication of this Notice of Application.

Within 45 days after the final hearing, the Governor(s) of the Adjacent Coastal State(s), in this case the Governors of New York and New Jersey, may notify MarAd of their approval, approval with conditions, or disapproval of the application. MarAd may not issue a license without the explicit or presumptive approval of the Governor(s) of the adjacent coastal state(s). During this 45 day time period, the Governor(s) may also notify MarAd of inconsistencies between the application and State programs relating to environmental protection, land and water use, and coastal zone management. In this case, MarAd may condition the license to make it consistent with such state programs (33 U.S.C. 1508(b)(1)). MarAd will not consider written approvals or disapprovals of the application from Governors of Adjacent Coastal States until the 45-day period after the final public hearing.

The Maritime Administrator must render a decision on the application within 90 days after the final hearing.

Should a favorable record of decision be rendered and license be issued, MarAd may include specific conditions related to design, construction, operations, environmental permitting, monitoring and mitigations, and financial responsibilities. If a license is issued, USCG would oversee the review and approval of the deepwater port's engineering design and construction; operations/security procedures; waterways management and regulated navigation areas; maritime safety and security requirements; risk assessment; and compliance with domestic and international laws and regulations for vessels that may call on the port. The deepwater port would be designed, constructed and operated in accordance with applicable codes and standards.

In addition, installation of pipelines and other structures, such as the Submerged Turret Loading buoys, may require permits under Section 404 of the Clean Water Act and Section 10 of the Rivers and Harbors Act, which are administered by USACE.

Permits from the EPA may also be required pursuant to the provisions of the Clean Air Act, as amended, and the Clean Water Act, as amended.

Summary of the Application

Liberty Natural Gas, LLC is proposing to construct, own, and operate a liquefied natural gas (LNG) deepwater port, known as Port Ambrose, located in the New York Bight. The Port Ambrose facility will be located at a different proposed location and include a different design than the previous deepwater port license application submitted by Liberty Natural Gas, LLC in 2010. Port Ambrose would consist of two Submerged Turret Loading Buoys (STL Buoys) in Federal waters approximately 17 nautical miles southeast of Jones Beach, New York, approximately 24 nautical miles east of Long Branch, New Jersey, and about 27 nautical miles from the entrance to New York Harbor, in a water depth of approximately 103 feet.

LNG would be delivered from purpose-built LNG regasification vessels (LNGRVs), vaporized on site and delivered through the STL buoys, flexible riser/umbilical, subsea manifold and lateral pipelines to a buried 19 nautical mile subsea Mainline connecting to the existing Transco Lower New York Bay Lateral in New York State waters approximately 2.2 nautical miles south of Long Beach, New York and 13 nautical miles east of Sandy Hook, New Jersey. The buoys would be lowered to rest on a landing pad when not in use and would also include a pile-anchored mooring array. STL Buoy 1 is located at Latitude: 40°19′24.61″ N and Longitude: 73°25′45.33″ W. STL Buoy 2 is located at Latitude: 40°20′09.26″ N and Longitude 73°23′51.92″ W. The Port components would fall in the following U.S. Outer Continental Shelf (OCS) lease blocks:

Buoy 1 (6708, 6709, 6758); Buoy 2 (6709); Lateral 1 (6708); Lateral 2 (6708, 6709); ''Y'' Assembly (6708); Mainline Pipeline (6708, 6658, 6657, 6607, 6606, 6556, 6555, 6554, 6504 and 6503).

The 145,000 cubic meter LNGRVs would have onboard closed-loop vaporization and metering and odorant capability. Each vessel will have three vaporization units capable of a maximum send-out of 750 million standard cubic feet per day (MMscfd) (maximum pipeline system flow rate is 660 MMscfd with two buoys) with annual average expected to be 400 MMscfd. The LNGRVs have been designed to utilize a ballast water cooling system that will entirely re-circulate onboard the vessel during Port operations, eliminating vessel discharges associated with regasification while at the Port. Deliveries through Port Ambrose would be focused during peak demand winter and summer months. The Port will receive up to 45 LNGRVs per year.

As proposed, the LNGRVs would access the port inbound from the Hudson Canyon to Ambrose Traffic Lane and depart via the Ambrose to

Nantucket Traffic Lane. MarAd and USCG are aware that Port Ambrose falls within the proposed area of interest for the New York Power Authority Long Island-New York City Offshore Wind Project. This project will be acknowledged and considered in the processing of the Port Ambrose application and NEPA analysis.

If approved, the majority of the port and pipeline construction and installation is proposed to occur in 2015, with commissioning in December 2015.

Privacy Act

The electronic form of all comments received into the Federal Docket Management System can be searched by the name of the individual submitting the comment (or signing the comment, if submitted on behalf of an association, business, labor union, etc.). The DOT Privacy Act Statement can be viewed in the **Federal Register** published on April 11, 2000 (Volume 65, Number 70, pages 19477–78) or by visiting *http://www.regulations.gov.*

Authority: 33. U.S.C. 1502, et seq.; 49 CFR 1.93(h).

Dated: June 11, 2013.

By Order of the Maritime Administrator.

Julie Agarwal,

Secretary, Maritime Administration.

[FR Doc. 2013–14203 Filed 6–13–13; 8:45 am]

BILLING CODE 4910–81–P

DEPARTMENT OF TRANSPORTATION

Maritime Administration

[Docket No. MARAD–2013 0068]

Requested Administrative Waiver of the Coastwise Trade Laws: Vessel OM; Invitation for Public Comments

AGENCY: Maritime Administration, Department of Transportation.

ACTION: Notice.

SUMMARY: As authorized by 46 U.S.C. 12121, the Secretary of Transportation, as represented by the Maritime Administration (MARAD), is authorized to grant waivers of the U.S.-build requirement of the coastwise laws under certain circumstances. A request for such a waiver has been received by MARAD. The vessel, and a brief description of the proposed service, is listed below.

DATES: Submit comments on or before July 15, 2013.

ADDRESSES: Comments should refer to docket number MARAD–2013–0068. Written comments may be submitted by hand or by mail to the Docket Clerk, U.S. Department of Transportation, Docket Operations, M–30, West Building Ground Floor, Room W12–140, 1200 New Jersey Avenue SE., Washington, DC 20590. You may also send comments electronically via the Internet at *http://www.regulations.gov.* All comments will become part of this docket and will be available for inspection and copying at the above address between 10 a.m. and 5 p.m., E.T., Monday through Friday, except federal holidays. An electronic version of this document and all documents entered into this docket is available on the World Wide Web at *http://www.regulations.gov.*

FOR FURTHER INFORMATION CONTACT: Linda Williams, U.S. Department of Transportation, Maritime Administration, 1200 New Jersey Avenue SE., Room W23–453, Washington, DC 20590. Telephone 202–366–0903, Email Linda.*Williams@dot.gov.*

SUPPLEMENTARY INFORMATION: As described by the applicant the intended service of the vessel OM is:

Intended Commercial Use of Vessel: ''6 Pack Sunset, harbor cruises, and overnight sails for Instruction Captained by USCG Licensed Captain.''

Geographic Region: ''North Carolina, South Carolina, Georgia, Florida, Puerto Rico.''

The complete application is given in DOT docket MARAD–2013–0068 at *http://www.regulations.gov.* Interested parties may comment on the effect this action may have on U.S. vessel builders or businesses in the U.S. that use U.S.-flag vessels. If MARAD determines, in accordance with 46 U.S.C. 12121 and MARAD's regulations at 46 CFR Part 388, that the issuance of the waiver will have an unduly adverse effect on a U.S.-vessel builder or a business that uses U.S.-flag vessels in that business, a waiver will not be granted. Comments should refer to the docket number of this notice and the vessel name in order for MARAD to properly consider the comments. Comments should also state the commenter's interest in the waiver application, and address the waiver criteria given in § 388.4 of MARAD's regulations at 46 CFR Part 388.

Privacy Act

Anyone is able to search the electronic form of all comments received into any of our dockets by the name of the individual submitting the comment (or signing the comment, if submitted on behalf of an association, business, labor union, etc.). You may review DOT's complete Privacy Act Statement in the **Federal Register** published on April 11, 2000 (Volume 65, Number 70; Pages 19477–78).

Dated: June 4, 2013.

By Order of the Maritime Administrator.

Julie P. Agarwal,

Secretary, Maritime Administration.

[FR Doc. 2013–14212 Filed 6–13–13; 8:45 am]

BILLING CODE 4910–81–P

DEPARTMENT OF TRANSPORTATION

Pipeline and Hazardous Materials Safety Administration

[Docket No. PHMSA–2013–0137]

Pipeline Safety: Information Collection Activities

AGENCY: Pipeline and Hazardous Materials Safety Administration (PHMSA), DOT.

ACTION: Notice and request for comments.

SUMMARY: In accordance with the Paperwork Reduction Act of 1995, PHMSA invites comments on an information collection under Office of Management and Budget (OMB) Control No. 2137–0596, titled: National Pipeline Mapping Program. PHMSA will request approval from OMB for a renewal of the current information collection with no revisions.

DATES: Interested persons are invited to submit comments on or before August 13, 2013.

ADDRESSES: Comments may be submitted in the following ways:

E-Gov Web site: http://www.regulations.gov. This site allows the public to enter comments on any **Federal Register** notice issued by any agency.

Fax: 1–202–493–2251.

Mail: Docket Management Facility; U.S. Department of Transportation, 1200 New Jersey Avenue SE., West Building, Room W12–140, Washington, DC 20590–001.

Hand Delivery: Room W12–140 on the ground level of the West Building, 1200 New Jersey Avenue SE., Washington, DC, between 9:00 a.m. and 5:00 p.m., Monday through Friday, except Federal Holidays.

Instructions: Identify the docket number PHMSA–2010–0088 at the beginning of your comments. Note that all comments received will be posted without change to *http://www.regulations.gov,* including any personal information provided. You should know that anyone is able to search the electronic form of all comments received into any of our dockets by the name of the individual

submitting the comment (or signing the comment, if submitted on behalf of an association, business, labor union, etc.). Therefore, you may want to review DOT's complete Privacy Act Statement in the **Federal Register** published on April 11, 2000 (65 FR 19477) or visit *http://www.regulations.gov* before submitting any such comments.

Docket: For access to the docket or to read background documents or comments, go to *http://www.regulations.gov* at any time or to Room W12–140 on the ground level of the West Building, 1200 New Jersey Avenue SE., Washington, DC, between 9:00 a.m. and 5:00 p.m., Monday through Friday, except Federal holidays. If you wish to receive confirmation of receipt of your written comments, please include a self-addressed, stamped postcard with the following statement: ''Comments on PHMSA–2010–0088.'' The Docket Clerk will date stamp the postcard prior to returning it to you via the U.S. mail. Please note that due to delays in the delivery of U.S. mail to Federal offices in Washington, DC, we recommend that persons consider an alternative method (internet, fax, or professional delivery service) of submitting comments to the docket and ensuring their timely receipt at DOT.

FOR FURTHER INFORMATION CONTACT: Angela Dow by telephone at 202–366–1246, by fax at 202–366–4566, or by mail at U.S. Department of Transportation, Pipeline and Hazardous Materials Safety Administration, 1200 New Jersey Avenue SE., PHP–30, Washington, DC 20590–0001.

SUPPLEMENTARY INFORMATION: Section 1320.8(d), Title 5, Code of Federal Regulations requires PHMSA to provide interested members of the public and affected agencies an opportunity to comment on information collection and recordkeeping requests. This notice identifies an information collection request that PHMSA will be submitting to OMB for renewal and extension. This information collection is contained in the pipeline safety regulations at 49 CFR Parts 190–199. The following information is provided for each information collection: (1) Title of the information collection; (2) OMB control number; (3) type of request; (4) abstract of the information collection activity; (5) description of affected public; (6) estimate of total annual reporting and recordkeeping burden; and (7) frequency of collection. PHMSA will request a three year term of approval for each information collection activity.

PHMSA requests comments on the following information collection:

SUPPLEMENTARY INFORMATION:

Title: National Pipeline Mapping Program.

OMB Control Number: 2137–0596.

Type of Request: Renewal of a Previously Approved Information Collection.

Abstract: Each operator of a pipeline facility (except distribution lines and gathering lines) must provide PHMSA contact information and geospatial data on their pipeline system. This information should be updated on an annual basis. The provided information is incorporated into the National Pipeline Mapping System (NPMS) to support various regulatory programs, pipeline inspections, and authorized external customers. The updates of operator pipeline data inform the NPMS of any changes to the data over the previous year and allow PHMSA to maintain and improve the accuracy of the information.

Affected Public: Operators of pipeline facilities (except distribution lines and gathering lines).

Estimated Number of Responses: 894.

Annual Estimated Total Annual Burden Hours: 16,312 hours.

Frequency of Collection: Annual.

Comments are invited on: Whether the proposed collection of information is necessary for the proper performance of the functions of the Department, including whether the information will have practical utility, the accuracy of the Department's estimate of the burden of the proposed information collection, ways to enhance the quality, utility and clarity of the information to be collected, and ways to minimize the burden of the collection of information on respondents, including the use of automated collection techniques or other forms of information technology. A comment to OMB is most effective if OMB receives it within 30 days of the date of publication in the **Federal Register**.

Authority: The Paperwork Reduction Act of 1995; 44 U.S.C. Chapter 35, as amended; and 49 CFR 1:48.

Issued in Washington, DC, on June 11, 2013.

John A. Gale,

Director, Office of Standards and Rulemaking.

[FR Doc. 2013–14155 Filed 6–13–13; 8:45 am]

BILLING CODE 4910–60–P

DEPARTMENT OF TRANSPORTATION

Surface Transportation Board

[Docket No. FD 35725]

MCM Rail Services LLC, d/b/a Baltimore Industrial Railroad—Operation Exemption—Hilco SP Rail, LLC

MCM Rail Services LLC, d/b/a Baltimore Industrial Railroad (MCM), a noncarrier, has filed a verified notice of exemption under 49 CFR 1150.31 to operate as a common carrier over an approximately 12-mile line of railroad in Sparrows Point, Baltimore County, Md. (the Line), pursuant to an agreement with Hilco SP Rail, LLC (Hilco).[1] MCM states that there are no mileposts on the Line.

MCM's notice was held in abeyance by decision served April 5, 2013, because, among other things, MCM had previously filed a petition for exemption in *MCM Rail Services LLC—Petition for Retroactive Exemption—In Sparrows Point, Md.,* Docket No. FD 35707, requesting essentially the same authority sought here. In a decision served June 11, 2013, the Board granted MCM's motion to withdraw that petition for exemption, and concurrently lifted the abeyance in this proceeding.

According to MCM, it has entered into a Railroad Services Agreement (Agreement) with Hilco to operate the Line until March 14, 2016, and, unless the Agreement is extended or MCM is otherwise able to continue service, MCM shall seek discontinuance authority from the Board prior to discontinuing service over the Line.

MCM states that there are no interchange commitments or paper barriers in the Agreement. MCM also states it will interchange traffic with CSX Transportation, Inc. (CSXT) and Norfolk Southern Railway Company (NSR) and that there will not be any interchange commitments or paper barriers between MCM and CSXT or MCM and NSR.

The transaction may be consummated on or after June 28, 2013 (the effective date of this exemption).

MCM certifies that that the projected annual revenues as a result of this transaction will not exceed those that would qualify it as a Class III rail carrier and further certifies that its projected annual revenue will not exceed $5 million.

[1] Hilco filed a notice of exemption to acquire and operate the Line, which was served and published in the **Federal Register** on April 26, 2013. *Hilco SP Rail, LLC—Acquisition and Operation Exemption—RG Steel Railroad Holding, LLC,* FD 35734 (STB served Apr. 26, 2013); 78 FR 24,803 (Apr. 26, 2013).

If the verified notice contains false or misleading information, the exemption is void *ab initio.* Petitions to revoke the exemption under 49 U.S.C. 10502(d) may be filed at any time. The filing of a petition to revoke will not automatically stay the effectiveness of the exemption. Petitions for stay must be filed no later than June 21, 2013 (at least seven days before the exemption becomes effective).

An original and 10 copies of all pleadings, referring to Docket No. FD 35725, must be filed with the Surface Transportation Board, 395 E Street SW., Washington, DC 20423–0001. In addition, a copy of each pleading must be served on Louis E. Gitomer, Law Offices of Louis E. Gitomer LLC, 600 Baltimore Avenue, Suite 301, Towson, MD 21204.

Board decisions and notices are available on our Web site at ''*www.stb.dot.gov.*''

Decided: June 11, 2013.

By the Board, Rachel D. Campbell, Director, Office of Proceedings.

Jeffrey Herzig,

Clearance Clerk.

[FR Doc. 2013–14178 Filed 6–13–13; 8:45 am]

BILLING CODE 4915–01–P

DEPARTMENT OF THE TREASURY

Community Development Financial Institutions Fund

Bond Guarantee Program; Notice of Guarantee Availability (NOGA) Inviting Qualified Issuer Applications and Guarantee Applications

Announcement Type: Announcement of opportunity to submit Qualified Issuer Applications and Guarantee Applications.

Catalog of Federal Domestic Assistance (CFDA) Number: 21.011.

DATES: Qualified Issuer Applications and Guarantee Applications may be submitted to the CDFI Fund starting on the date of publication of this NOGA. Applications will be reviewed by the CDFI Fund on an ongoing basis, in the order in which they are received or by such other criteria that the CDFI Fund may establish and publish, in its sole discretion. In order to be considered for the issuance of a Guarantee under FY 2013 program authority, Qualified Issuer Applications and Guarantee Applications must be submitted by July 17, 2013. Subject to Congressional authorization to issue Guarantees in FY 2014, Qualified Issuer Applications and Guarantee Applications received after July 17, 2013 may be considered under FY 2014 authority.

Executive Summary: This NOGA is published in connection with the CDFI Bond Guarantee Program, administered by the Community Development Financial Institutions Fund (CDFI Fund), a wholly owned government corporation within the U.S. Department of the Treasury (Treasury). The purpose of this NOGA is to notify the public that: (i) Parties interested in being approved as Qualified Issuers may submit Qualified Issuer Applications and (ii) Qualified Issuers may submit Guarantee Applications to be approved for a Guarantee under the CDFI Bond Guarantee Program. This NOGA also explains application submission and evaluation requirements and processes, agency contacts, and information on CDFI Bond Guarantee Program outreach.

I. Guarantee Opportunity Description

A. Authority; Program Summary; Additional Reference Documents; Definitions

1. *Authority.* The CDFI Bond Guarantee Program is authorized by the Small Business Jobs Act of 2010 (Pub. L. 111–240; 12 U.S.C. 4713a) (the Act). Section 1134 of the Act amended the Riegle Community Development and Regulatory Improvement Act of 1994 (12 U.S.C. 4701, et seq.) to provide authority to the Secretary of the Treasury to establish and administer the CDFI Bond Guarantee Program.

2. *Program summary.* The purpose of the CDFI Bond Guarantee Program is to support CDFI lending by providing Guarantees for Bonds issued for Eligible Community or Economic Development Purposes, as authorized by section 1134 and 1703 of the Act. The Secretary, as the Guarantor of the Bonds, will provide a 100 percent Guarantee for the repayment of the Verifiable Principal, Interest, and Call Premium of Bonds issued by Qualified Issuers. As the CDFI Bond Guarantee Program has been structured, a Qualified Issuer, approved by the CDFI Fund, will issue Bonds that will be purchased by the Federal Financing Bank. The Qualified Issuer will use Bond Proceeds to provide Bond Loans to Eligible CDFIs. The Eligible CDFIs will use Bond Loan proceeds to provide Secondary Loans to Secondary Borrowers.

In FY 2013, the Secretary may guarantee up to five Bond Issues, or up to $500 million with a minimum Guarantee of $100 million per Bond Issue. The maximum maturity of the Bonds will be 30 years; the Bonds will be taxable. The Bonds will support CDFI lending in Investment Areas by providing a source of low-cost, long-term capital to CDFIs.

3. *Guarantee availability.* Pursuant to this NOGA, the Guarantor may provide Guarantees in the aggregate amount of up to $500 million in FY 2013. Additional authority to provide Guarantee for Bonds in FY 2014 may be made available subject to Congressional action.

4. *Additional reference documents.* In addition to this NOGA, the CDFI Fund encourages interested parties and applicants to review the following documents, which will be posted on the CDFI Bond Guarantee Program page of the CDFI Fund's Web site at *http://www.cdfifund.gov.* (a) *CDFI Bond Guarantee Program Regulations.* The interim rule that governs the CDFI Bond Guarantee Program was published on February 5, 2013 (78 FR 8296; 12 CFR part 1808) (the Regulations) and provides the regulatory requirements and parameters for CDFI Bond Guarantee Program implementation and administration including general provisions, eligibility, eligible activities, applications for Guarantee and Qualified Issuer, evaluation and selection, terms and conditions of the Guarantee, Bonds, Bond Loans, and Secondary Loans. In addition to the Regulations, the CDFI Fund has provided a document that summarizes certain program terms and conditions, which may be found on the CDFI Fund's Web site.

(b) *Application materials.* Details regarding Qualified Issuer Application and Guarantee Application content requirements are found in this NOGA and the respective applications materials.

(c) *Program documentation.* Interested parties should review certain CDFI Bond Guarantee Program template documents, which will be used in connection with each Guarantee and will be posted on the CDFI Fund's Web site for review. Such documents include, among others:

(i) The Agreement to Guarantee, which describes the roles and responsibilities of the Qualified Issuer, will be signed by the Qualified Issuer and the Guarantor and will include term sheets as appendices that will be signed by each individual Eligible CDFI;

(ii) The Bond Trust Indenture, which describes responsibilities of the Master Servicer/Trustee in overseeing the servicing of the Bonds and will be entered into by the Qualified Issuer and the Master Servicer/Trustee (to be selected by the CDFI Fund);

(iii) The Bond Loan Agreement, which describes the terms and conditions of Bond Loans and will be

entered into by the Qualified Issuer and each Eligible CDFI that receives a Bond Loan;

(iv) The Bond Purchase Agreement, which describes the terms and conditions under which the Bond Purchaser will purchase the Bonds issued by the Qualified Issuer and will be signed by the Bond Purchaser, the Qualified Issuer, the Guarantor and the CDFI Fund. This document also includes the provisions for prepayment privileges and the calculation for the prepayment discount or premium; and

(v) The Future Advance Promissory Bond, which will be signed by the Qualified Issuer as its promise to repay the Bond Purchaser. This document also defines prepayment privileges and includes the instructions for prepayment of the Bond.

The form documents may be updated periodically, as needed, and will be tailored, as appropriate, to the particular terms and conditions of a Guarantee. Accordingly, the template documents should not be relied on, but instead are provided for illustrative purposes.

(d) *Frequently Asked Questions.* The CDFI Fund will periodically post on its Web site responses to questions that are asked by parties interested in the CDFI Bond Guarantee Program.

5. *Definitions.* Capitalized terms used herein and not defined elsewhere are defined in section 1808.102 of the Regulations.

B. *Coordination with broader community development strategies.* Consistent with Federal efforts to promote community revitalization, it is important for communities to develop a comprehensive neighborhood revitalization strategy that addresses neighborhood assets essential to transforming distressed neighborhoods into healthy and vibrant communities. Neighborhood transformation can best occur when comprehensive neighborhood revitalization plans embrace the coordinated use of programs and resources that address the interrelated needs within a community. Although not a requirement for participating in the CDFI Bond Guarantee Program, the Federal Government believes that a CDFI will be most successful when it is a part of, and contributes to, an area's broader neighborhood revitalization strategy.

C. *Designated Bonding Authority.* The CDFI Fund has determined that, for purposes of this NOGA, it will not solicit applications from entities seeking to serve as a Qualified Issuer in the role of the Designated Bonding Authority, pursuant to 12 CFR 1808.201, in either FY 2013 or FY 2014.

D. *Noncompetitive process.* The CDFI Bond Guarantee Program is a non-competitive program through which Qualified Issuer Applications and Guarantee Applications will undergo a merit-based evaluation (i.e., applications will not be scored against each other in a competitive manner in which higher ranked applicants are favored over lower ranked applicants). Applications will be reviewed by the CDFI Fund on an ongoing basis, and Guarantees will be provided in the order in which Guarantee Applications are approved or by such other criteria that the CDFI Fund may establish and publish, in its sole discretion. However, pursuant to the Regulations at 12 CFR 1808.504(c), the Guarantor may limit the number of Guarantees made per year or the number of Guarantee Applications accepted to ensure that a sufficient examination of Guarantee Applications is conducted.

E. *Relationship to other CDFI Fund programs.* Award funds received under any other CDFI Fund Program cannot be used by any participant, including Qualified Issuers, Eligible CDFIs, and Secondary Borrowers, to pay principal, interest, fees, administrative costs, or issuance costs (including Bond Issuance Fees) related to the CDFI Bond Guarantee Program, or to fund the Risk-Share Pool for each Bond Issue.

F. *Relationship and interplay with other Federal programs and Federal funding.*

1. Eligible CDFIs may not use Bond Loans to refinance existing Federal debt or to service debt from other Federal credit programs.

2. The CDFI Bond Guarantee Program underwriting process will include a comprehensive review of the Eligible CDFI's concentration of sources of funds available for debt service, including the concentration of sources from other Federal programs and level of reliance on said sources, to determine the Eligible CDFI's ability to service the additional debt.

G. *Contemporaneous application submission.* Qualified Issuer Applications may be submitted contemporaneously with Guarantee Applications; however, the CDFI Fund will review an entity's Qualified Issuer Application and make its Qualified Issuer determination prior to approving a Guarantee Application.

II. General Application Information

The following requirements apply to all Qualified Issuer Applications and Guarantee Applications submitted under this NOGA.

A. CDFI Certification Requirements

1. The Qualified Issuer applicant must be a Certified CDFI or an entity designated by a Certified CDFI to issue Bonds on its behalf. Eligible CDFI applicants must be Certified CDFIs as of the date of submission of the Guarantee Application. If approved for a Guarantee, each Eligible CDFI must be a Certified CDFI as of the Bond Issue Date and must maintain its respective CDFI certification throughout the term of the corresponding Bond.

2. A Certified CDFI is an entity that has been certified by the CDFI Fund as meeting the CDFI certification requirements set forth in 12 CFR 1805.201. For purposes of this NOGA, a Certified CDFI is an entity that has received official notification from the CDFI Fund that it meets all CDFI certification requirements as of the date of submission of the associated Qualified Issuer Application and/or Guarantee Application, which certification has not expired, and has not been notified by the CDFI Fund that its certification has been terminated.

3. In cases in which the CDFI Fund provided a Certified CDFI with written notification that its original or most recent certification had been extended, the extended certification remains in full force and effect unless or until any of the following has occurred: (i) The CDFI Fund's written notice of the extended period of certification includes a written expiration date for that extension, which has now passed; (ii) the CDFI Fund has published new requirements for certification which supersede the certification extension and redefine parameters or limits to the certification extension, resulting in an expiration date for the extension which has now passed; or (iii) the CDFI Fund has notified the Certified CDFI that its certification, including the additional extension period, is revoked or terminated.

4. The CDFI Fund reserves the right to re-examine the CDFI certification status of a Qualified Issuer applicant or an entity that wishes to be an Eligible CDFI, and to require that such applicant or entity submit a new CDFI certification application in advance of its certification expiration date, if applicable.

B. Application Submission

1. *Electronic submission.* All Qualified Issuer Applications and Guarantee Applications must be submitted electronically through myCDFIFund, the CDFI Fund's internet-based interface. Applications sent by mail, fax, or other form will not be

permitted, except in circumstances that the CDFI Fund, in its sole discretion, deems acceptable. Please note that Applications will not be accepted through Grants.gov.

2. *Applicant identifier numbers.* Please note that, pursuant to OMB guidance (68 *Fed. Reg.* 38402), each Qualified Issuer applicant and Guarantee applicant must provide, as part of its Application, its Dun and Bradstreet Data Universal Numbering System (DUNS) number, as well as DUNS numbers for its proposed Program Administrator, its proposed Servicer, and each Certified CDFI that is included in the Qualified Issuer Application and Guarantee Application. In addition, each Application must include a valid and current Employer Identification Number (EIN), with a letter or other documentation from the IRS confirming the Qualified Issuer applicant's EIN, as well as EINs for its proposed Program Administrator, its proposed Servicer, and each Certified CDFIs that is included in any Application. An Application that does not include such DUNS numbers, EINs and documentation is incomplete and will be rejected by the CDFI Fund. Applicants should allow sufficient time for the IRS and/or Dun and Bradstreet to respond to inquiries and/or requests for the required identification numbers.

3. *System for Award Management (SAM).* On July 30, 2012, the Central Contractor Registration (CCR) transitioned to the SAM. All data in the registrant database has been migrated from CCR into SAM. Any entity that needs to create a new account or update its current registration must register for a user account in SAM. Registering with SAM is required for each Qualified Issuer applicant, its proposed Program Administrator, its proposed Servicer, and each Certified CDFI that is included in any Application. The CDFI Fund will not consider any Applications that do not meet the requirement that each entity must be properly registered before the date of Application submission. The CDFI Fund does not manage the SAM registration process, so entities must contact SAM directly for issues related to registration. The CDFI Fund strongly encourages all applicants to ensure that their SAM registration (and the SAM registration for their Program Administrators, Servicers and each Certified CDFI that is included in the Qualified Issuer Application and Guarantee Application) is updated and that their accounts have not expired. For information regarding SAM registration, please visit *https://www.sam.gov/sam.*

4. *myCDFIFund accounts.* Each Qualified Issuer applicant, its proposed Program Administrator, its proposed Servicer, and each Certified CDFI that is included in the Qualified Issuer Application or Guarantee Application must register User and Organization accounts in myCDFIFund, the CDFI Fund's Internet-based interface. Each such entity must be registered as an Organization and register at least one (1) User Account in myCDFIFund in order for any Application to be considered complete. As myCDFIFund is the CDFI Fund's primary means of communication with applicants with regard to its programs, each such entity must make sure that it updates the contact information in its myCDFIFund account before any Application is submitted. For more information on myCDFIFund, please see the ''Frequently Asked Questions'' link posted at *https://www.cdfifund.gov/myCDFI/Help/Help.asp.*

C. Form of Application

1. As of the date of this NOGA, the Qualified Issuer Application, the Guarantee Application and related application guidance may be found on the CDFI Bond Guarantee Program's page on the CDFI Fund's Web site at *http://www.cdfifund.gov.*

2. *Paperwork Reduction Act.* Under the Paperwork Reduction Act (44 U.S.C. chapter 35), an agency may not conduct or sponsor a collection of information, and an individual is not required to respond to a collection of information, unless it displays a valid OMB control number. Pursuant to the Paperwork Reduction Act, the Qualified Issuer Application, the Guarantee Application, and the Secondary Loan Requirements have been assigned the following control number: 1559–0044.

3. *Application deadlines.* In order to be considered for the issuance of a Guarantee under FY 2013 program authority, Qualified Issuer Applications and Guarantee Applications must be submitted by July 17, 2013. Subject to Congressional authorization to issue Guarantees in FY 2014, Qualified Issuer Applications and Guarantee Applications received after July 17, 2013 may be considered for FY 2014 authority.

4. *Format.* Detailed Qualified Issuer Application and Guarantee Application content requirements are found in the Applications and application guidance. The CDFI Fund will read only information requested in the Application and reserves the right not to read attachments or supplemental materials that have not been specifically requested in this NOGA, the Qualified Issuer or the Guarantee Application. Supplemental materials or attachments such as letters of public support or other statements that are meant to bias or unduly influence the Application review process will not be read.

5. *Application revisions.* After submitting a Qualified Issuer Application or a Guarantee Application, the applicant will not be permitted to revise or modify the Application in any way unless authorized or requested by the CDFI Fund.

6. *Material changes.*

(a) In the event that there are material changes after the submission of a Qualified Issuer Application prior to the designation as a Qualified Issuer, the applicant must notify the CDFI Fund of such material changes information in a timely and complete manner. The CDFI Fund will evaluate such material changes, along with the Qualified Issuer Application, to approve or deny the designation of the Qualified Issuer.

(b) In the event that there are material changes after the submission of a Guarantee Application (including, but not limited to, a revision of the Capital Distribution Plan or a change in the Eligible CDFIs that are included in the application) prior to or after the designation as a Qualified Issuer or approval of a Guarantee Application or Guarantee, the applicant must notify the CDFI Fund of such material changes information in a timely and complete manner. The Guarantor will evaluate such material changes, along with the Guarantee Application, to approve or deny the Guarantee Application and/or determine whether to modify the terms and conditions of the Agreement to Guarantee. This evaluation may result in a delay of the approval or denial of a Guarantee Application.

D. Eligibility and Completeness Review

The CDFI Fund will review each Qualified Issuer and Guarantee Application to determine whether it is complete and the applicant meets eligibility requirements described in the Regulations at 12 CFR 1808.200 and 1808.401, this NOGA, and the Applications. An incomplete Qualified Issuer Application or Guarantee Application, or one that does not meet eligibility requirements, will be rejected. If the CDFI Fund determines that additional information is needed to assess the Qualified Issuer's and/or the Certified CDFIs' ability to participate in and comply with the requirements of the CDFI Bond Guarantee Program, the CDFI Fund may require that the Qualified Issuer furnish additional, clarifying, confirming or supplemental information. If the CDFI Fund requests such additional, clarifying, confirming or supplemental information, the

Qualified Issuer must provide it within the timeframes requested by the CDFI Fund. Until such information is provided to the CDFI Fund, the Qualified Issuer Application or Guarantee Application will not be moved forward for the Substantive Review process. The Guarantor shall approve or deny a Guarantee Application no later than 90 days after the date the Guarantee Application has been advanced for Substantive Review.

E. Regulated Entities

In the case of Qualified Issuer applicants, proposed Program Administrators, proposed Servicers and Certified CDFIs that are included in the Qualified Issuer Application or Guarantee Application that are Insured Depository Institutions and Insured Credit Unions, the CDFI Fund will consider information provided by, and views of, the Appropriate Federal Banking Agencies. If any such entity is a CDFI bank holding company, the CDFI Fund will consider information provided by the Appropriate Federal Banking Agencies of the CDFI bank holding company and its CDFI bank(s). Throughout the Application review process, the CDFI Fund will consult with the Appropriate Federal Banking Agency about the applicant's financial safety and soundness. If the Appropriate Federal Banking Agency identifies safety and soundness concerns, the CDFI Fund will assess whether the concerns cause or will cause the applicant to be incapable of undertaking activities related to the CDFI Bond Guarantee Program. The CDFI Fund also reserves the right to require an Insured CDFI applicant to improve safety and soundness conditions prior to being approved as a Qualified Issuer. In addition, the CDFI Fund will take into consideration Community Reinvestment Act assessments of Insured Depository Institutions and/or their Affiliates.

F. Prior CDFI Fund Awardees

All applicants must be aware that success under any of the CDFI Fund's programs is not indicative of success under this NOGA. Prior CDFI Fund awardees should note the following:

1. *Failure to meet reporting requirements.* The CDFI Fund will not consider a Qualified Issuer Application or Guarantee Application if the applicant, its proposed Program Administrator, its proposed Servicer, or any of the Certified CDFIs included in the Qualified Issuer Application or Guarantee Application, is a prior awardee or allocatee under any CDFI Fund program and is not current on the reporting requirements set forth in a previously executed agreement(s), as of the date of the Application submission. Please note that the CDFI Fund's automated system typically acknowledge only a report's receipt. Such an acknowledgment does not verify or otherwise represent that the report received was complete and therefore met reporting requirements.

2. *Pending resolution of noncompliance.* If a Qualified Issuer applicant, its proposed Program Administrator, its proposed Servicer, or any of the Certified CDFIs included in the Qualified Issuer Application or Guarantee Application, is a prior awardee or allocatee under any CDFI Fund program and (i) it has submitted complete and timely reports to the CDFI Fund that demonstrate noncompliance with a previously executed agreement with the CDFI Fund, and (ii) the CDFI Fund has yet to make a final determination as to whether the entity is in default of its previously executed agreement, the CDFI Fund will consider the Qualified Issuer Application or Guarantee Application pending full resolution, in the sole determination of the CDFI Fund, of the noncompliance.

3. *Default status.* The CDFI Fund will not consider a Qualified Issuer Application or Guarantee Application if the applicant, its proposed Program Administrator, its proposed Servicer, or any of the Certified CDFIs included in the Qualified Issuer Application or Guarantee Application, is a prior awardee or allocatee under any CDFI Fund program if, as of the date of Qualified Issuer Application or Guarantee Application submission, (i) the CDFI Fund has made a determination that such entity is in default of a previously executed agreement and (ii) the CDFI Fund has provided written notification of such determination to the Qualified Issuer applicant indicating the length of time the default status is effective. Such entities will be ineligible to submit a Qualified Issuer Application, or be included in such submission, as the case may be, so long as the applicant's, its proposed Program Administrator's, its proposed Servicer's, or such Certified CDFI's prior award or allocation remains in default status or such other time period as specified by the CDFI Fund in writing.

4. *Undisbursed award funds.* The CDFI Fund will not consider a Qualified Issuer Application or Guarantee Application, if the applicant, its proposed Program Administrator, its proposed Servicer, or any Certified CDFI that is included in the Qualified Issuer Application or Guarantee Application, is an awardee under any CDFI Fund program and has undisbursed award funds (as defined below) as of the Qualified Issuer Application or Guarantee Application submission date. The CDFI Fund will include the combined undisbursed prior awards, as of the date of the Qualified Issuer Application submission, of the applicant, the proposed Program Administrator, the proposed Servicer, and any Certified CDIs included in the application.

For purposes of the calculation of undisbursed award funds for the Bank Enterprise Award (BEA) Program, only awards made to the Qualified Issuer applicant, its proposed Program Administrator, its proposed Servicer, and any Certified CDFI included in the Qualified Issuer Application, three to five calendar years prior to the end of the calendar year of the Qualified Issuer Application submission date are included. For purposes of the calculation of undisbursed award funds for the CDFI Program, the Native American CDFI Assistance (NACA) Program, and the Capital Magnet Fund (CMF), only awards made to the Qualified Issuer applicant, its proposed Program Administrator, its proposed Servicer, and any Certified CDFI included in the Qualified Issuer Application, two to five calendar years prior to the end of the calendar year of the Qualified Issuer Application submission date are included.

Undisbursed awards cannot exceed five percent of the total includable awards for the Applicant's BEA/CDFI/NACA/CMF awards as of the date of submission of the Qualified Issuer Application. The calculation of undisbursed award funds does not include: (i) Tax credit allocation authority made available through the New Markets Tax Credit Program; (ii) any award funds for which the CDFI Fund received a full and complete disbursement request from the awardee by the date of submission of the Qualified Issuer Application; (iii) any award funds for an award that has been terminated in writing by the CDFI Fund or de-obligated by the CDFI Fund; or (iv) any award funds for an award that does not have a fully executed assistance or award agreement. The CDFI Fund strongly encourages Qualified Issuer applicants, proposed Program Administrators, proposed Servicers, and any Certified CDFIs included in a Qualified Issuer Application that wish to request disbursements of undisbursed funds from prior awards to provide the CDFI Fund with a complete disbursement request at least 10 business days prior to the date of

submission of a Qualified Issuer Application.

G. Contact the CDFI Fund

A Qualified Issuer applicant, its proposed Program Administrator, its proposed Servicer, or any Certified CDFIs included in the Qualified Issuer Application or Guarantee Application that are prior CDFI Fund awardees are advised to: (i) Comply with requirements specified in CDFI Fund assistance, allocation, and/or award agreement(s), and (ii) contact the CDFI Fund to ensure that all necessary actions are underway for the disbursement or deobligation of any outstanding balance of said prior award(s). Any such parties that are unsure about the disbursement status of any prior award should contact the CDFI Fund's Senior Resource Manager via email at *CDFI.disburseinquiries@cdfi.treas.gov.* All outstanding reports and compliance questions should be directed to Certification, Compliance Monitoring, and Evaluation support by email at *ccme@cdfi.treas.gov* or by telephone at (202) 653–0423. The CDFI Fund will respond to applicants' reporting, compliance, or disbursement questions between the hours of 9:00 a.m. and 5:00 p.m. ET, starting on the date of the publication of this NOGA.

H. Evaluating Prior Award Performance

In the case of a Qualified Issuer, a proposed Program Administrator, a proposed Servicer, or Certified CDFI that has received awards from other Federal programs, the CDFI Fund reserves the right to contact officials from the appropriate Federal agency or agencies to determine whether the entity is in compliance with current or prior award agreements, and to take such information into consideration before issuing a Guarantee. In the case of such an entity that has previously received funding through any CDFI Fund program, the CDFI Fund will review those entities (or their Affiliates) that have a history of providing late reports and consider such history in the context of organizational capacity and the ability to meet future reporting requirements. The CDFI Fund may also bar from consideration any such entity that has, in any proceeding instituted against it in, by, or before any court, governmental, or administrative body or agency, received a final determination within the last three years indicating that the entity has discriminated on the basis of race, color, national origin, disability, age, marital status, receipt of income from public assistance, religion, or sex.

I. Changes to Review Procedures

The CDFI Fund reserves the right to change its completeness, eligibility and evaluation criteria and procedures if the CDFI Fund deems it appropriate. If such changes materially affect the CDFI Fund's decision to approve or deny a Qualified Issuer Application, the CDFI Fund will provide information regarding the changes through the CDFI Fund's Web site.

J. Decisions Are Final

The CDFI Fund's Qualified Issuer Application decisions are final. The Guarantor's Guarantee Application decisions are final. There is no right to appeal the decisions. Any applicant that is not approved by the CDFI Fund or the Guarantor may submit a new Application and will be considered based on the newly submitted Application. Such newly submitted Applications will be reviewed along with all other pending Applications in the order in which they are received, or by such other criteria that the CDFI Fund may establish and publish, in its sole discretion.

III. Qualified Issuer Application

A. General

This NOGA invites interested parties to submit a Qualified Issuer Application to be approved as a Qualified Issuer under the CDFI Bond Guarantee Program.

1. *Qualified Issuer.* The Qualified Issuer is a Certified CDFI, or any entity designated by a Certified CDFI to issue Bonds on its behalf, that meets the requirements of the Regulations and this NOGA, and that has been approved by the CDFI Fund pursuant to review and evaluation of its Qualified Issuer Application. The Qualified Issuer will, among other duties: (i) Organize the Eligible CDFIs that have designated it to serve as their Qualified Issuer; (ii) prepare and submit a complete and timely Qualified Issuer and Guarantee Application to the CDFI Fund; (iii) if the Qualified Issuer Application is approved by the CDFI Fund and the Guarantee Application is approved by the Guarantor, prepare the Bond Issue; (iv) manage all Bond Issue servicing, administration, and reporting functions; (v) make Bond Loans; (vi) oversee the making of Secondary Loans; (vii) ensure compliance throughout the duration of the Bond with all provisions of the Regulations, and Bond Documents and Bond Loan Documents entered into between the Guarantor, the Qualified Issuer, and the Eligible CDFI; and (viii) ensure that the Master Servicer/Trustee complies with the Bond Trust Indenture and all other applicable regulations.

2. *Qualified Issuer Application.* The Qualified Issuer Application is the document that an entity seeking to serve as a Qualified Issuer submits to the CDFI Fund to apply to be approved as a Qualified Issuer prior to consideration of a Guarantee Application.

3. *Qualified Issuer Application evaluation, general.* Each Qualified Issuer Application will be evaluated by the CDFI Fund and, if acceptable, the applicant will be approved as a Qualified Issuer, in the sole discretion of the CDFI Fund. The CDFI Fund's Qualified Issuer Application review and evaluation process is based on established procedures, which may include interviews of applicants and/or site visits to applicants conducted by the CDFI Fund. Through the Application review process, the CDFI Fund will evaluate Qualified Issuer applicants on a merit basis and in a fair and consistent manner. Each Qualified Issuer applicant will be reviewed on its ability to successfully carry out the responsibilities of a Qualified Issuer throughout the life of the Bond.

B. Qualified Issuer Application: Eligibility

1. *CDFI certification requirements.* The Qualified Issuer applicant must be a Certified CDFI or an entity designated by a Certified CDFI to issue Bonds on its behalf.

2. *Designation and attestation by Certified CDFIs.* An entity seeking to be approved by the CDFI Fund as a Qualified Issuer must be designated as a Qualified Issuer by at least one Certified CDFI. The Qualified Issuer applicant will prepare and submit a complete and timely Qualified Issuer Application to the CDFI Fund in accordance with the requirements of the Regulations, this NOGA and the Application. A Certified CDFI must attest in the Qualified Issuer Application that it has designated the Qualified Issuer to act on its behalf and that the information in the Qualified Issuer Application regarding it is true, accurate and complete.

C. Substantive Review and Approval Process

1. *Substantive Review.* (a) If the CDFI Fund determines that the Qualified Issuer Application is complete and eligible, the CDFI Fund will undertake a substantive review in accordance with the criteria and procedures described in the Regulations, this NOGA, the Qualified Issuer Application, and standard operating procedures.

(b) As part of the substantive evaluation process, the CDFI Fund reserves the right to contact the Qualified Issuer applicant (as well as its proposed Program Administrator, its proposed Servicer, and each designating Certified CDFI in the Qualified Issuer Application) by telephone, email, mail, or through on-site visits for the purpose of obtaining additional, clarifying, confirming, or supplemental application information. The CDFI Fund reserves the right to collect such additional, clarifying, confirming, or supplemental information from said entities as it deems appropriate. If contacted for additional, clarifying, confirming, or supplemental information, said entities must respond within the time parameters set by the CDFI Fund or the Qualified Issuer Application will be rejected.

2. *Qualified Issuer criteria.* Qualified Issuer determinations will be made based on Qualified Issuer applicants' experience and expertise, in accordance with the following criteria:

(a) *Organizational capability.*

(i) The Qualified Issuer applicant must demonstrate that it has the appropriate expertise, capacity, experience, and qualifications to issue Bonds for Eligible Purposes, as well as manage the Bond Issue on the terms and conditions set forth in the Regulations, this NOGA, and the Bond Documents, satisfactory to the CDFI Fund.

(ii) The Qualified Issuer applicant must demonstrate that it has the appropriate expertise, capacity, and experience to originate, underwrite, service and monitor Bond Loans for Eligible Purposes, targeted to Low-Income Areas and Underserved Rural Areas.

(iii) The Qualified Issuer applicant must demonstrate that it has the appropriate expertise, capacity, and experience to manage the disbursement process set forth in the Regulations at 12 CFR 1808.302 and 1808.307.

(b) *Servicer.* The Qualified Issuer applicant must demonstrate that it has (either directly or contractually through another designated entity) the appropriate expertise, capacity, and experience, or is otherwise qualified to serve as Servicer. The Qualified Issuer Application must provide information that demonstrates that the Qualified Issuer's Servicer has the expertise and experience necessary to perform certain required administrative duties (including, but not limited to, Bond Loan servicing functions).

(c) *Program Administrator.* The Qualified Issuer applicant must demonstrate that it has (either directly or contractually through another designated entity) the appropriate expertise, capacity, and experience, or is otherwise qualified to serve as Program Administrator. The Qualified Issuer Application must provide information that demonstrates that the Qualified Issuer's Program Administrator has the expertise and experience necessary to perform certain required administrative duties (including, but not limited to, compliance monitoring and reporting functions).

(d) *Strategic alignment.* The Qualified Issuer applicant will be evaluated on its strategic alignment with the program on factors that include, but are not limited to: (i) Its mission's strategic alignment with community and economic development objectives set forth in the Riegle Act at 12 U.S.C. 4701; (ii) its strategy for deploying the entirety of funds that may become available to the Qualified Issuer through the proposed Bond Issue; (iii) its experience providing up to 30-year capital to CDFIs or other borrowers in Low-Income Areas or Underserved Rural Areas as such terms are defined in the Regulations at 12 CFR 1808.102; (iv) its track record of activities relevant to its stated strategy; and (v) other factors relevant to the Qualified Issuer's strategic alignment with the program.

(e) *Experience.* The Qualified Issuer applicant will be evaluated on factors that demonstrate that it has previous experience: (i) Performing the duties of a Qualified Issuer including making bond issuances, loan servicing, program administration, underwriting, financial reporting, and loan administration; (ii) lending in Low-Income Areas and Underserved Rural Areas; and (iii) indicating that the Qualified Issuer's current principals and team members have successfully performed the required duties, and that previous experience is applicable to the current principals and team members.

(f) *Management and staffing.* The Qualified Issuer applicant must demonstrate that it has sufficiently strong management and staffing capacity to undertake the duties of Qualified Issuer. The applicant must also demonstrate that its proposed Program Administrator and its proposed Servicer have sufficiently strong management and staffing capacity to undertake their respective requirements under the CDFI Bond Guarantee Program. Strong management and staffing capacity is evidenced by factors that include, but are not limited to: (i) A sound track record of delivering on past performance; (ii) a documented succession plan; (iii) organizational stability including staff retention; and (iv) a clearly articulated, reasonable and well-documented staffing plan.

(g) *Financial strength.* The Qualified Issuer applicant must demonstrate the strength of its financial capacity and activities including, among other items, financially sound business practices relative to the industry norm for bond issuers, as evidenced by reports of Appropriate Federal Banking Agencies, Appropriate State Agencies, or auditors. Such financially sound business practices will demonstrate: (i) The financial wherewithal to perform activities related to the Bond Issue such as administration and servicing; (ii) the ability to originate, underwriting, close, and disburse loans in a prudent manger; (iii) whether the applicant is depending on external funding sources and the reliability of long-term access to such funding; (iv) whether there are foreseeable counterparty issues or credit concerns that are likely to affect the applicant's financial stability; and (v) a budget that reflects reasonable assumptions about upfront costs as well as ongoing expenses and revenues.

(h) *Systems and information technology.* The Qualified Issuer applicant must demonstrate that it (as well as its proposed Program Administrator and its proposed Servicer) has, among other things: (i) A strong information technology capacity and the ability to manage loan servicing, administration, management and document retention; (ii) appropriate office infrastructure and related technology to carry out the CDFI Bond Guarantee Program activities; and (iii) sufficient backup and disaster recovery systems to maintain uninterrupted business operations.

(i) *Pricing structure.* The Qualified Issuer applicant must provide its proposed pricing structure for performing the duties of Qualified Issuer, including the pricing for the roles of Program Administrator and Servicer. Although the pricing structure and fees shall be decided by negotiation between market participants without interference or approval by the CDFI Fund, the CDFI Fund will evaluate whether the Qualified Issuer applicant's proposed pricing structure is feasible to carry out the responsibilities of a Qualified Issuer over the life of the Bond and sound implementation of the program.

(j) *Other criteria.* The Qualified Issuer applicant must meet such other criteria as may be required by the CDFI Fund, as set forth in the Qualified Issuer Application or required by the CDFI Fund in its sole discretion, for the purposes of evaluating the merits of a Qualified Issuer Application.

(k) *Third-party data sources.* The CDFI Fund, in its sole discretion, may consider information from third-party sources including, but not limited to, periodicals or publications, publicly available data sources, or subscriptions services for additional information about the Qualified Issuer applicant, the proposed Program Administrator, the proposed Servicer and each Certified CDFI that is included in the Qualified Issuer Application. Any additional information received from such third-party sources will be reviewed and evaluated through a systematic and formalized process.

D. Notification of Qualified Issuer Determination

Each Qualified Issuer applicant will be informed of the CDFI Fund's decision in writing, by email using the addresses maintained in the entity's myCDFIFund account. The CDFI Fund will not notify the proposed Program Administrator, the proposed Servicer, or the Certified CDFIs included in the Qualified Issuer Application of its decision regarding the Qualified Issuer Application; such contacts are the responsibility of the Qualified Issuer applicant.

E. Qualified Issuer Application rejection

In addition to substantive reasons based on the merits of its review, the CDFI Fund reserves the right to reject a Qualified Issuer Application if information (including administrative errors) comes to the attention of the CDFI Fund that adversely affects an applicant's eligibility, adversely affects the CDFI Fund's evaluation of a Qualified Issuer Application, or indicates fraud or mismanagement on the part of a Qualified Issuer applicant or its proposed Program Administrator, its proposed Servicer, and any Certified CDFI included in the Qualified Issuer Application. If the CDFI Fund determines that any portion of the Qualified Issuer Application is incorrect in any material respect, the CDFI Fund reserves the right, in its sole discretion, to reject the Application.

IV. Guarantee Applications

A. General

This NOGA invites Qualified Issuers to submit a Guarantee Application to be approved for a Guarantee under the CDFI Bond Guarantee Program.

1. *Guarantee Application.*

(a) The Guarantee Application is the application document that a Qualified Issuer (in collaboration with the Eligible CDFIs that seek to be included in the proposed Bond Issue) must submit to the CDFI Fund in order to apply for a Guarantee. The Qualified Issuer shall provide all required information in its Guarantee Application to establish that it meets all criteria set forth in the Regulations at 12 CFR 1808.501 and this NOGA and can carry out all Guarantee requirements including, but not limited to, information that demonstrates that the Qualified Issuer has the appropriate expertise, capacity, and experience and is qualified to make, administer and service Bond Loans for Eligible Purposes.

(b) The Guarantee Application comprises a Capital Distribution Plan and at least one Secondary Capital Distribution Plan, as well as all other requirements set forth in this NOGA or as may be required by the Guarantor and the CDFI Fund in their sole discretion, for the evaluation and selection of Guarantee applicants.

2. *Guarantee Application evaluation, general.* The Guarantee Application review and evaluation process will be based on established standard procedures, which may include interviews of applicants and/or site visits to applicants conducted by the CDFI Fund. Through the Application review process, the CDFI Fund will evaluate Guarantee applicants on a merit basis and in a fair and consistent manner. Each Guarantee applicant will be reviewed on its ability to successfully implement and carry out the activities proposed in its Guarantee Application throughout the life of the Bond.

B. Guarantee Application: Eligibility

1. *Eligibility; CDFI certification requirements.* Each Eligible CDFI must be a Certified CDFI as of the date of submission of a Guarantee Application. If approved for a Guarantee, each Eligible CDFI must be a Certified CDFI as of the Bond Issue Date and must maintain its respective CDFI certification throughout the term of the corresponding Bond. For more information on CDFI Certification see part II of this NOGA.

2. *Qualified Issuer as Eligible CDFI.* A Qualified Issuer may not participate as an Eligible CDFI within its own Bond Issue, but may participate as an Eligible CDFI in a Bond Issue managed by another Qualified Issuer.

3. *Attestation by proposed Eligible CDFIs.* Each proposed Eligible CDFI must attest in the Guarantee Application that it has designated the Qualified Issuer to act on its behalf and that the information pertaining to the Eligible CDFI in the Guarantee Application is true, accurate and complete. Each proposed Eligible CDFI must also attest in the Guarantee Application that it will use Bond Loan proceeds for Eligible Purposes and that Secondary Loans will be made only within the applicable Secondary Loan Requirements.

C. Guarantee Application: Preparation

When preparing the Guarantee Application, the Eligible CDFIs and Qualified Issuer must collaborate to determine the composition and characteristics of the Bond Issue, ensuring compliance with the Act, the Regulations, and this NOGA. The Qualified Issuer is responsible for the collection, preparation, verification and submission of the Eligible CDFI information that is presented in the Guarantee Application. The Qualified Issuer will submit the Guarantee Application for the proposed Bond Issue, including any information provided by the proposed Eligible CDFIs. In addition, the Qualified Issuer will serve as the primary point of contact with the CDFI Fund during the Guarantee Application review and evaluation process.

D. Review and Approval Process

1. *Substantive review.* (a) If the CDFI Fund determines that the Guarantee Application is complete and eligible, the CDFI Fund will undertake a Substantive Review in accordance with the criteria and procedures described in the Regulations at 12 CFR 1808.501, this NOGA, and the Guarantee Application. The Substantive Review of the Guarantee Application will include due diligence, underwriting, credit risk review and Federal credit subsidy calculation in order to determine the feasibility and risk of the proposed Bond Issue, as well as the strength and capacity of the Qualified Issuer and each proposed Eligible CDFI. Each proposed Eligible CDFI will be evaluated independently of the other proposed Eligible CDFIs within the proposed Bond Issue.

(b) As part of the Substantive Review process, the CDFI Fund may contact the Qualified Issuer (as well as the proposed Eligible CDFIs included in the Guarantee Application) by telephone, email, mail, or through an on-site visit for the sole purpose of obtaining additional, clarifying, confirming, or supplemental application information. The CDFI Fund reserves the right to collect such additional, clarifying, confirming or supplemental information as it deems appropriate. If contacted for additional, clarifying, confirming, or supplemental information, said entities must respond within the time parameters set by the CDFI Fund or the Guarantee Application will be rejected.

2. *Guarantee Application criteria.* (a) In general, a Guarantee Application will

be evaluated based on the strength and feasibility of the proposed Bond Issue, as well as the creditworthiness and performance of the Qualified Issuer and the proposed Eligible CDFIs.

(b) The Capital Distribution Plan must demonstrate the Qualified Issuer's comprehensive plan for lending, disbursing, servicing and monitoring each Bond Loan in the Bond Issue. It includes, among other information, the following components:

(i) *Statement of Proposed Sources and Uses of Funds:* Pursuant to the requirements set forth in the Regulations at 12 CFR 1808.102(bb) and 1808.301, the Qualified Issuer must provide: (A) A description of the overall plan for the Bond Issue; (B) a description of the proposed uses of Bond Proceeds and proposed sources of funds to repay principal and interest on the proposed Bond and Bond Loans; (C) a certification that 100 percent of the principal amounts of the proposed Bond will be used to make Bond Loans for Eligible Purposes on the Bond Issue Date; and (D) description of the extent to which the proposed Bond Loans will serve Low-Income Areas or Underserved Rural Areas;

(ii) *Bond Issue Qualified Issuer cash flow model:* The Qualified Issuer must provide a cash flow model displaying the orderly repayment of the Bond and the Bond Loans according to their respective terms. The cash flow model shall include disbursement and repayment of Bonds, Bond Loans, and Secondary Loans. The cash flow model shall match the aggregated cash flows from the Secondary Capital Distribution Plans of each of the underlying Eligible CDFIs in the Bond Issue pool;

(iii) *Organizational capacity:* If not submitted concurrently, the Qualified Issuer must attest that no material changes have occurred since the time that it submitted the Qualified Issuer Application;

(iv) *Credit Enhancement (if applicable):* The Qualified Issuer must provide information about the adequacy of proposed risk mitigation provisions designed to protect the financial interests of the Federal Government, either directly or indirectly through supporting the financial strength of the Bond Issue. This includes, but is not limited to, the amount and quality of any Credit Enhancements, terms and specific conditions such as renewal options, and any limiting conditions or revocability by the provider of the Credit Enhancement;

(v) *Secondary Capital Distribution Plan(s):* Each proposed Eligible CDFI must provide a comprehensive plan for lending, disbursing, servicing and monitoring Secondary Loans, how each proposed Secondary Loan will meet Eligible Purposes, and such other requirements that may be required by the Guarantor and the CDFI Fund, including:

(A) *Narrative and Statement of Proposed Sources and Uses of Funds:* Each Eligible CDFI will: (1) Provide a description of proposed uses of funds, including the extent to which Bond Loans will serve Low-Income Areas or Underserved Rural Areas, and the extent to which Bond Loan proceeds will be used (i) to make the first monthly installment of a Bond Loan payment, (ii) pay Issuance Fees up to one percent of the Bond Loan, and (iii) finance Loan Loss Reserves related to Secondary Loans; (2) attest that 100 percent of Bond Loan proceeds designated for Secondary Loans will be used to make Secondary Loans that meet Secondary Loan Requirements; (3) describe a plan for lending, disbursing, servicing, and monitoring Secondary Loans; (4) indicate the expected asset classes to which it will lend under the Secondary Loan Requirements; (5) indicate examples of previous lending and years of experience lending to a specific asset class; (6) provide a table detailing specific uses and timing of disbursements, including terms and relending plans if applicable; and (7) a community impact analysis, including how the proposed Secondary Loans will address financing needs that the private market is not adequately serving and specific community benefit metrics;

(B) *Eligible CDFI cash flow model:* Each Eligible CDFI must provide a cash flow model of the proposed Bond Loan which: (1) Matches each Eligible CDFI's portion of the Qualified Issuer's cash flow model; and (2) tracks the flow of funds through the term of the Bond Issue and demonstrates disbursement and repayment of the Bond Loan, Secondary Loans, and any utilization of the Relending Fund, if applicable;

(C) *Organizational capacity:* Each Eligible CDFI must provide documentation indicating the ability of the Eligible CDFI to manage its Bond Loan including, but not limited to: (1) Organizational ownership and chart of affiliates; (2) organizational documents; (3) management or operating agreement, if applicable; (4) an analysis by management of its ability to manage the funding, monitoring, and collection of loans being contemplated with the proceeds of the Bond Loan; (5) information about its board of directors; (6) a governance narrative; (7) description of senior management and employee base; (8) independent reports, if available; (9) strategic plan or related progress reports; and (10) a discussion of the management and information systems used by the Eligible CDFI;

(D) *Policies and procedures:* Each Eligible CDFI must provide policies and procedures for the matching of assets and liabilities, as well as loan policies and procedures: A copy of the asset-liability matching policy, if applicable; and loan policies which address topics including, but not limited to: (1) Origination, underwriting, credit approval, interest rates, closing, documentation, and portfolio monitoring and (2) risk-rating definitions, charge-offs, and loan loss reserve methodology;

(E) *Financial statements:* Each Eligible CDFI must provide information about the Eligible CDFI's current and future financial position, including but not limited to: (1) Most recent three years of audited financial statements; (2) current year-to-date or interim financial statement; (3) a copy of the current year's approved budget; and (4) a three year operating projection;

(F) *Loan portfolio information:* Each Eligible CDFI must provide information such as: (1) Loan portfolio quality report; (2) pipeline report; (3) portfolio listing; (4) a description of other loan assets under management; (5) loan products; (6) independent loan review report; (7) impact report case studies; and (8) a loan portfolio by risk rating and loan loss reserves; and

(G) *Funding sources and financial activity information:* Each Eligible CDFI must provide information including, but not limited to: (1) Current grant information; (2) funding projections; (3) credit enhancements; (4) historical investor renewal rates; (5) covenant compliance; (6) off-balance sheet contingencies; (7) earned revenues; and (8) debt capital statistics.

(vi) Assurances and certifications that not less than 100 percent of the principal amount of Bonds will be used to make Bond Loans for Eligible Purposes beginning on the Bond Issue Date, and that Secondary Loans shall be made as set forth in subsection 1808.307(b); and

(vii) Such other information that the Guarantor, the CDFI Fund and/or the Bond Purchaser may deem necessary and appropriate.

3. *Credit subsidy cost.* The credit subsidy cost is the net present value of the estimated long-term cost of the Guarantee to the Federal Government as determined under the applicable provisions of the Federal Credit Reform Act of 1990, as amended (FCRA). Treasury has not received appropriated amounts from Congress to cover the credit subsidy costs associated with the

Guarantees issued pursuant to this NOGA. In accordance with FCRA, Treasury must consult with, and obtain the approval of, OMB for Treasury's calculation of the credit subsidy cost of each Guarantee prior to entering into any Agreement to Guarantee.

E. Guarantee Approval

1. The Guarantor, in the Guarantor's sole discretion, may approve a Guarantee, in consideration of the recommendation from the CDFI Bond Guarantee Program's Credit Review Board and/or based on the merits of the Guarantee Application. The Guarantor shall approve or deny a Guarantee Application no later than 90 days after the date the Guarantee Application has been advanced for Substantive Review.

2. The Guarantor reserves the right to approve Guarantees, in whole or in part, in response to any, all, or none of the Guarantee Applications submitted in response to this NOGA. The Guarantor also reserves the right to approve Guarantees in amounts that are less than requested in a Guarantee Application. Pursuant to the Regulations at 12 CFR 1808.504(c), the Guarantor may limit the number of Guarantees made per year to ensure that a sufficient examination of Guarantee Applications is conducted.

3. The CDFI Fund will notify the Qualified Issuer in writing of the Guarantor's approval or disapproval of a Guarantee Application. If approved for a Guarantee, the Qualified Issuer will enter into an Agreement to Guarantee, which will include terms and conditions that will be signed by each Eligible CDFI. Following the execution of the Agreement to Guarantee, the parties will proceed to the Bond Issue Date, when the parties will sign the Bond Documents.

4. The Guarantee shall not be effective until the Guarantor signs and delivers the Guarantee.

F. Guarantee Denial

The Guarantor, in the Guarantor's sole discretion, may deny a Guarantee, in consideration of the recommendation from the Credit Review Board and/or based on the merits of the Guarantee Application. In addition, the Guarantor reserves the right to deny a Guarantee Application if information (including administrative errors) comes to the Guarantor's attention that adversely affects the Qualified Issuer's eligibility, adversely affects the evaluation or scoring of an Application, or indicates fraud or mismanagement on the part of the Qualified Issuer, Program Administrator, Servicer, and/or Eligible CDFIs. Further, if the Guarantor determines that any portion of the Guarantee Application is incorrect in any material respect, the Guarantor reserves the right, in the Guarantor's sole discretion, to deny the Application.

V. Guarantee Administration

A. *Pricing information.* Bond Loans will be priced based upon the underlying Bond issued by the Qualified Issuer and purchased by the Federal Financing Bank (FFB or Bond Purchaser). The FFB will set the liquidity premium at the time of the Bond Issue Date, based on the duration and maturity of the Bonds according to the FFB's lending policies (*www.treasury.gov/ffb*). Liquidity premiums will be charged in increments of ⅛th of a percent (i.e., 12.5 basis points).

B. *Fees and other payments.* The following table includes some of the fees that may be applicable to Qualified Issuers and Eligible CDFIs after approval of a Guarantee of a Bond Issue, as well as Risk-Share Pool funding, prepayment penalties or discounts, and Credit Enhancements. The table is not exhaustive; additional fees payable to the CDFI Fund or other parties may apply.

Fee	Description
Agency Administrative Fee	Payable annually to the CDFI Fund by the Qualified Issuer. Equal to 10 basis points on the amount of the unpaid principal of the Bond Issue.
Bond Issuance Fees	Amounts paid by an Eligible CDFI for reasonable and appropriate expenses, administrative costs, and fees for services in connection with the issuance of the Bond (but not including the Agency Administrative Fee) and the making of the Bond Loan. Bond Issuance Fees negotiated between the Qualified Issuer and the Eligible CDFI. Up to 1% of Bond Loan Proceeds may be used to finance the Bond Issuance Fee.
Servicer fee	The fees paid by the Eligible CDFI to the Qualified Issuer's Servicer. Servicer fees negotiated between the Qualified Issuer and the Eligible CDFI.
Program Administrator fee	The fees paid by the Eligible CDFI to the Qualified Issuer's Program Administrator. Program Administrator fees negotiated between the Qualified Issuer and the Eligible CDFI.
Master Servicer/Trustee fee	The fees paid by the Qualified Issuer and the Eligible CDFI to the Master Servicer/Trustee to carry out the responsibilities of the Bond Trust Indenture. Master Servicer/Trustee fees negotiated between the Qualified Issuer and the Master Servicer/Trustee.
Risk-Share Pool funding	The funds paid by the Eligible CDFIs to cover Risk-Share Pool requirements; capitalized by pro rata payments equal to 3% of the amount disbursed on the Bond from all Eligible CDFIs within the Bond Issue.
Prepayment penalties or discounts	Prepayment penalties or discounts may be determined by the FFB at the time of prepayment.
Credit Enhancements	Pledges made to enhance the quality of a Bond and/or Bond Loan. Credit Enhancements include, but are not limited to, the Principal Loss Collateral Provision and letters of credit.

C. *Annual assessment.* In accordance with 12 CFR 1808.302(f), each year, beginning on the one year anniversary of the Bond Issue Date (and every year thereafter for the term of the Bond Issue), each Qualified Issuer must demonstrate that not less than 100 percent of the principal amount of the Guaranteed Bonds currently disbursed and outstanding has been used to make loans to Eligible CDFIs for Eligible Purposes. If a Qualified Issuer fails to demonstrate this requirement within the 90 days after the anniversary of the Bond Issue Date, the Qualified Issuer must repay on that portion of Bonds necessary to bring the Bonds that remain outstanding after such repayment into compliance with the 100 percent requirement above.

D. *Secondary Loan Requirements.* In accordance with the Regulations, Eligible CDFIs must make Secondary Loans for Eligible Purposes (not including loan loss reserves) that align with Secondary Loan Requirements. The Secondary Loan Requirements are found on the CDFI Fund's Web site at *www.cdfifund.gov.* Applicants should become familiar with the published Secondary Loan Requirements. Secondary Loan Requirements are classified by asset class and are subject

to a Secondary Loan commitment process managed by the Qualified Issuer. Within one year of the Bond Issue Date, the Eligible CDFI must close a minimum of 50 percent of the Secondary Loans. If this requirement is not met, the Qualified Issuer will lose the authority to draw the remaining funds under the Bond Issue. Within two years of the Bond Issue Date, the Eligible CDFI must close all Secondary Loans within the Bond Issue. Eligible CDFIs must disburse all Secondary Loans within 60 months of the Bond Issue Date. Secondary Loans shall carry loan maturities suitable to the loan purpose and consistent with loan-to-value requirements set forth in the Secondary Loan Requirements. Secondary Loan maturities shall not exceed the corresponding Bond or Bond Loan maturity date. It is the expectation of the CDFI Fund that such interest rates will be reasonable based on the borrower and loan characteristics.

E. *Secondary Loan collateral requirements.* 1. The Regulations state that Secondary Loans must be secured by a first lien of the Eligible CDFI on pledged collateral, in accordance with the Regulations (at 12 CFR 1808.307(f)) and within certain parameters. Examples of acceptable forms of collateral may include, but are not limited to: Real property (including land and structures); machinery, equipment and movables; cash and cash equivalents; accounts receivable; letters of credit; inventory; fixtures; contracted revenue streams from non-Federal counterparties, provided the Secondary Borrower pledges all assets, rights and interests necessary to generate such revenue stream; and a Principal Loss Collateral Provision. Intangible assets, such as customer relationships, intellectual property rights, and to-be-constructed real estate improvements, are not acceptable forms of collateral.

2. The Regulations require that Bond Loans must be secured by a first lien on a collateral assignment of Secondary Loans, and further that the Secondary Loans must be secured by a first lien or parity lien on acceptable collateral.

3. Valuation of the collateral pledged by the Secondary Borrower must be based on the Eligible CDFI's credit policy guidelines and must conform to the standards set forth in the Uniform Standards of Professional Appraisal Practice (USPAP).

4. Independent third-party appraisals are required for the following collateral: Real estate; fixtures, machinery and equipment, and movables stock valued in excess of $250,000; contracted revenue stream from non-Federal creditworthy counterparties. Secondary Loan collateral shall be valued using the cost approach, net of depreciation and shall be required for the following: Accounts receivable; machinery, equipment and movables; and fixtures.

F. *Qualified Issuer approval of Eligible CDFIs.* The Qualified Issuer shall not approve any Bond Loans to an Eligible CDFI where the Qualified Issuer has actual knowledge, based upon reasonable inquiry, that within the past five (5) years the Eligible CDFI: (i) Has been delinquent on any payment obligation (except upon a demonstration by the Qualified Issuer satisfactory to the CDFI Fund that the delinquency does not affect the Eligible CDFI's creditworthiness), or has defaulted and failed to cure any other obligation, on a loan or loan agreement previously made under the Act; (ii) has been found by the Qualified Issuer to be in default of any repayment obligation under any Federal program; (iii) is financially insolvent in either the legal or equitable sense; or (iv) is not able to demonstrate that it has the capacity to comply fully with the payment schedule established by the Qualified Issuer.

G. *Credit Enhancements; Principal Loss Collateral Provision.* 1. In order to achieve the statutory zero-credit subsidy constraint of the CDFI Bond Guarantee Program and to avoid a call on the Guarantee, Eligible CDFIs are encouraged to include Credit Enhancements and Principal Loss Collateral Provisions structured to protect the financial interests of the Federal Government.

2. Credit Enhancements may include, but are not limited to, payment guarantees from third parties or Affiliates, lines or letters of credit, or other pledges of financial resources that enhance the Eligible CDFI's ability to make timely interest and principal payments under the Bond Loan.

3. As distinct from Credit Enhancements, Principal Loss Collateral Provisions may be provided in lieu of pledged collateral and in addition to pledged collateral. A Principal Loss Collateral Provision shall be in the form of cash or cash equivalent guarantees in amounts necessary to secure the Eligible CDFI's obligations under the Bond Loan after exercising other remedies for default. For example, a Principal Loss Collateral Provision may include a deficiency guarantee whereby another entity assumes liability after other default remedies have been exercised, and covers the deficiency incurred by the creditor. The Principal Loss Collateral Provision shall, at a minimum, provide for the provision of cash or cash equivalents in an amount that is not less than the difference between the value of the collateral and the amount of the accelerated Bond Loan outstanding.

4. In all cases, acceptable Credit Enhancements or Principal Loss Collateral Provisions shall be proffered by creditworthy providers and shall provide information about the adequacy of the facility in protecting the financial interests of the Federal Government, either directly or indirectly through supporting the financial strength of the Bond Issue. This includes, but is not limited to, the amount and quality of any Credit Enhancements, the financial strength of the provider of the Credit Enhancement, the terms, specific conditions such as renewal options, and any limiting conditions or revocability by the provider of the Credit Enhancement.

5. For Secondary Loans benefitting from a Principal Loss Collateral Provision (e.g., a deficiency guarantee), the entity providing the Principal Loss Collateral Provision must be underwritten based on the same criteria as if the Secondary Loan were being made directly to that entity with the exception that the guarantee need not be collateralized.

6. If the Principal Loss Collateral Provision is provided by a financial institution that is regulated by an Appropriate Federal Banking Agency or an Appropriate State Agency, the guaranteeing institution must demonstrate performance of financially sound business practices relative to the industry norm for providers of collateral enhancements as evidenced by reports of Appropriate Federal Banking Agencies, Appropriate State Agencies, and auditors, as appropriate.

H. *Reporting requirements.* 1. *General.* Qualified Issuers and Eligible CDFIs that participate in the Bond Guarantee Program will be required to execute and deliver at closing legal agreements including the Agreement to Guarantee, the Bond Trust Indenture, and the Bond Loan Agreement, among others. The forms of these documents, containing terms and conditions and covenants over use of proceeds, loan commitments, advances, disbursements, principal and interest payments, program fees and accounts, Secondary Loans, financial condition and information reporting and other matters of the Qualified Issuer, Master Servicer/Trustee, and Eligible CDFIs, will be published and accessible on the CDFI Fund's Web site or sent to the Qualified Issuer by other means.

2. *Reports.* (a) In general, as required pursuant to the Regulations at 12 CFR 1808.619, the CDFI Fund will collect information from each Qualified Issuer

which may include, but will not be limited to: (i) Quarterly and annual financial reports and data (including an OMB A–133 audit, as applicable) for the purpose of monitoring the financial health, ratios and covenants of Eligible CDFIs that include asset quality (non-performing assets, loan loss reserves, and net charge-off ratios), liquidity (current ratio, quick ratio, working capital, and operating liquidity ratio), solvency (capital ratio, self-sufficiency, fixed charge, leverage, and debt service coverage ratios); (ii) annual reports as to the compliance of the Qualified Issuer and Eligible CDFIs with the Regulations and specific requirements of the Bond Documents; (iii) monthly reports on uses of Bond Loan proceeds and Secondary Loan proceeds; (iv) summary of program accounts and transactions for each Bond Issue; (v) Secondary Loan certifications describing Eligible CDFI lending, collateral valuation, and eligibility; (vi) financial data on Secondary Loans to assess loan performance, quality, and payment history; (vii) annual certifications of compliance with program requirements; (viii) reports of Eligible CDFI management and/or organizational changes; (ix) updates to the Capital Distribution Plan (as applicable); (x) supplements and/or clarifications to correct reporting errors (as applicable); and (xi) such other information that the CDFI Fund and/or the Bond Purchaser may require.

(b) Detailed information on specific reporting requirements will be provided to Qualified Issuers, Program Administrators, Servicers, and Eligible CDFIs at a later date. Reporting requirements will be enforced through the Agreement to Guarantee and the Bond Loan Agreement, and will be assigned a valid OMB control number pursuant to the Paperwork Reduction Act.

(c) Each Qualified Issuer will be responsible for the timely and complete submission of the annual reporting documents, including such information that must be provided by other entities such as Eligible CDFIs or Secondary Borrowers. If such other entities are required to provide annual report information or documentation, or other documentation that the CDFI Fund may require, the Qualified Issuer will be responsible for ensuring that the information is submitted timely and complete. Notwithstanding the foregoing, the CDFI Fund reserves the right to contact such entities and require that additional information and documentation be provided directly to the CDFI Fund.

(d) The CDFI Fund will use the aforementioned information to monitor compliance with the requirements set forth in the Agreement to Guarantee and to assess the impact of the CDFI Bond Guarantee Program.

(e) The CDFI Fund reserves the right, in its sole discretion, to modify its reporting requirements if it determines it to be appropriate and necessary; however, such reporting requirements will be modified only after notice to Qualified Issuers. Additional information about reporting requirements pursuant to this NOGA and the Bond Documents will be subject to the Paperwork Reduction Act.

3. *Accounting.* (a) In general, the CDFI Fund will require each Qualified Issuer and Eligible CDFI to account for and track the use of Bond Proceeds and Bond Loan proceeds. This means that for every dollar of Bond Proceeds and received from the Bond Purchaser, the Qualified Issuer is required to inform the CDFI Fund of its uses, including Bond Loan proceeds. This will require Qualified Issuers and Eligible CDFIs to establish separate administrative and accounting controls, subject to the applicable OMB Circulars.

(b) The CDFI Fund will provide guidance to Qualified Issuers outlining the format and content of the information that is to be provided on an annual basis, outlining and describing how the Bond Proceeds and Bond Loan proceeds were used.

VI. Agency Contacts

A. The CDFI Fund will respond to questions and provide support concerning this NOGA, the Qualified Issuer Application and the Guarantee Application between the hours of 9:00 a.m. and 5:00 p.m. ET, starting with the date of the publication of this NOGA. Applications and other information regarding the CDFI Fund and its programs may be obtained from the CDFI Fund's Web site at *http://www.cdfifund.gov.* The CDFI Fund will post on its Web site responses to questions of general applicability regarding the CDFI Bond Guarantee Program.

B. The CDFI Fund's contact information is as follows:

TABLE 2—CONTACT INFORMATION

Type of question	Telephone number (not toll free)	Email addresses
CDFI Bond Guarantee Program	(202) 653–0421 Option 5	*bgp@cdfi.treas.gov.*
CDFI Certification	(202) 653–0423	*ccme@cdfi.treas.gov.*
Compliance Monitoring and Evaluation	(202) 653–0423	*ccme@cdfi.treas.gov.*
Information Technology Support	(202) 653–0422	*ithelpdesk@cdfi.treas.gov.*

C. *Communication with the CDFI Fund.* The CDFI Fund will use the myCDFIFund Internet interface to communicate with applicants, Qualified Issuers, Program Administrators, Servicers, Certified CDFIs and Eligible CDFIs, using the contact information maintained in their respective myCDFIFund accounts. Therefore, each such entity must maintain accurate contact information (including contact person and authorized representative, email addresses, fax numbers, phone numbers, and office addresses) in its respective myCDFIFund account. For more information about myCDFIFund (which includes information about the CDFI Fund's Community Investment Impact System), please see the Help documents posted at *http://www.cdfifund.gov/ciis/accessingciis.pdf.*

VII. Information Sessions and Outreach

The CDFI Fund may conduct webcasts, webinars, or information sessions for organizations that are considering applying to, or are interested in learning about, the CDFI Bond Guarantee Program. For further information, please visit the CDFI Fund's Web site at *http://www.cdfifund.gov.*

Authority: Public Law 111–240; 12 U.S.C. 4701, et seq.; 12 CFR 1808.

Dated: June 10, 2013.

Dennis Nolan,

Deputy Director, Community Development Financial Institutions Fund.

[FR Doc. 2013–14154 Filed 6–13–13; 8:45 am]

BILLING CODE 4810–70–P

DEPARTMENT OF THE TREASURY

Community Development Financial Institutions Fund

CDFI Bond Guarantee Program

AGENCY: Community Development Financial Institutions Fund, U.S. Department of the Treasury.

ACTION: Notice of Request for Proposals for Master Servicer/Trustee.

SUMMARY: The Community Development Financial Institutions (CDFI) Fund, a wholly owned government corporation within the U.S. Department of the Treasury, is seeking proposals from entities interested in serving as the Master Servicer/Trustee for the CDFI Bond Guarantee Program, which was authorized under the Small Business Jobs Act of 2010 (Pub. L. 111–240; 12 U.S.C. 4713a) (the Act). This Notice of Request for Proposals describes the duties of the Master Servicer/Trustee, the criteria to be used to select the Master Servicer/Trustee, the selection process, and how to submit proposals.

DATES: Proposals to become the Master Servicer/Trustee must be received by the CDFI Fund no later than 5:00 p.m. ET on July 1, 2013.

FOR FURTHER INFORMATION CONTACT: Lisa M. Jones, Program Manager, CDFI Bond Guarantee Program, by mail to the CDFI Fund, U.S. Department of the Treasury, 1500 Pennsylvania Avenue NW., Washington, DC 20220; by email to *bgp@cdfi.treas.gov;* or by facsimile at (202) 508–0090 (this is not a toll free number). Information regarding the CDFI Fund and the CDFI Bond Guarantee Program may be downloaded from the CDFI Fund's Web site at *http://www.cdfifund.gov.*

SUPPLEMENTARY INFORMATION:

I. General

A. CDFI Bond Guarantee Program

1. *Purpose; program summary.* The purpose of the CDFI Bond Guarantee Program is to support CDFI lending by providing Guarantees for Bonds issued for Eligible Community or Economic Development Purposes, as authorized by section 1134 of the Act. Pursuant to the Act, the Guarantor will provide a Guarantee for the repayment of the full amount of the Verifiable Principal, Interest, and Call Premium of the Bonds issued by Qualified Issuers as part of a Bond Issue. Bonds will be used to finance Bond Loans to Eligible CDFIs for Eligible Purposes for a period not to exceed 30 years. The Bonds will support CDFI lending in Investment Areas by providing a source of low-cost, long-term capital to CDFIs.

2. *Additional reference documents.* In addition to this Notice, the CDFI Fund encourages interested parties to review the following documents, which can be found on the CDFI Bond Guarantee Program page of the CDFI Fund's Web site at *http://www.cdfifund.gov:*

(a) *CDFI Bond Guarantee Program Regulations.* The interim rule that governs the CDFI Bond Guarantee Program was published on February 5, 2013 (78 FR 8296; 12 CFR part 1808) (the Regulations) and provides the regulatory requirements and parameters for the CDFI Bond Guarantee Program including, among others, general provisions, eligibility, eligible activities, applications for Guarantee and Qualified Issuer, evaluation and selection, and terms and conditions of Guarantee. In addition to the Regulations, the CDFI Fund has provided a document that summarizes certain program terms and conditions, which may be found on the CDFI Fund's Web site at *http://www.cdfifund.gov.*

(b) *Bond Trust Indenture.* The CDFI Fund will publish on its Web site, either simultaneously with this Notice or shortly thereafter, a template for the Bond Trust Indenture, the agreement that will govern the relationship between the Master Servicer/Trustee and the respective Qualified Issuer. The Bond Trust Indenture sets forth the roles, responsibilities and functions of the Master Servicer/Trustee under the CDFI Bond Guarantee Program. This form document may be updated periodically, as needed, and will be tailored to the Master Service/Trustee and Qualified Issuer at the time of Bond closing. Accordingly, this form document should not be relied on, but instead is provided for illustrative purposes.

(c) *Notice of Guarantee Availability (NOGA).* The CDFI Fund will publish the NOGA for FY 2013 Guarantee authority, notifying the public that: (i) Parties interested in being approved as Qualified Issuers can submit Qualified Issuer Applications and (ii) Qualified Issuers can submit Guarantee Applications to be approved for a Guarantee. The NOGA explains application submission and evaluation requirements and processes, certain Guarantee administration information and agency contacts.

(d) *Federal credit documents.* Interested parties should review the Office of Management and Budget (OMB) Circular A–129 (Policies for Federal Credit Programs and Non-Tax Receivables) in order to fully understand credit review requirements that pertain to the CDFI Bond Guarantee Program. In addition, interested parties should review the Federal Credit Supplement, published annually by OMB.

(e) *Program materials.* Interested parties should review the Qualified Issuer Application and Guarantee Application, found on the CDFI Fund's Web site.

(f) *Legal documents.* Interested parties should review CDFI Bond Guarantee Program template documents including, but not limited to, the Agreement to Guarantee and the Bond Loan Agreement, which will be posted on the CDFI Fund's Web site. These form documents may be updated periodically, as needed, and will be tailored, as appropriate, to the particular terms and conditions of a Guarantee. Accordingly, these form documents should not be relied on, but instead are provided for illustrative purposes.

(g) *Frequently Asked Questions.* The CDFI Fund will periodically post on its Web site responses to questions that have been asked by parties interested in learning more about the CDFI Bond Guarantee Program.

3. *Definitions.* Capitalized terms used herein and not defined elsewhere are defined in section 1808.102 of the Regulations.

II. Roles and Responsibilities of Master Servicer/Trustee

A. General

1. There will be one Master Servicer/Trustee for the CDFI Bond Guarantee Program.

2. The Master Servicer/Trustee will be a third-party trust company or financial institution that is in the business of servicing bonds and loans that are similar to the Bonds and Bond Loans, has been deemed acceptable by the CDFI Fund, and whose duties will include, among others, exercising fiduciary powers to enforce the terms of the Bonds and Bond Loans pursuant to the Bond Trust Indenture entered into by and between the Master Servicer/Trustee and the respective Qualified Issuer, overseeing the activities of the Servicer, and facilitating Bond principal and interest payments to the Federal Financing Bank, as Bond Purchaser.

3. Accordingly, the duties of the Master Servicer/Trustee will include loan administration, servicing, and monitoring of the Bond Issue and the corresponding Bonds and Bond Loans with respect to the Qualified Issuer's repayment obligations to the Bond Purchaser and the terms of the Agreement to Guarantee and the Bond Loan Agreement.

4. The Master Servicer/Trustee will also be charged with all customary

duties required of a Paying Agent, Collateral Agent, and Custodian (as those terms are customarily used and which duties may be enumerated in the Bond Trust Indenture).

5. When necessary, the Master Servicer/Trustee will act as Special Servicer, performing certain administrative duties related to the restructuring of Bond Loans that are in or about to enter into an event of default (i.e., distressed asset management or resolution), as well as initiating foreclosure action, appointing a receiver, and enforcing deficiency judgments. As described below, the Department of the Treasury will have certain decision-making authority with respect to the Qualified Issuer's instructions to the Master Servicer/Trustee as to the best course of action when multiple remedies or options are available (i.e., the decision as to whether to restructure a Bond Loan or initiate foreclosure actions).

6. The Master Servicer/Trustee's administrative fees and expenses will be paid by each Eligible CDFI in accordance with the Bond Trust Indenture and related documents.

7. The Master Servicer/Trustee's roles and responsibilities will be enumerated and governed by the Bond Trust Indenture entered into with each Qualified Issuer that receives a Guarantee through the CDFI Bond Guarantee Program.

8. The Master Servicer/Trustee will not be considered to have entered into a contract or binding agreement with the Federal Government under the Federal Acquisition Regulations or otherwise. The Master Servicer/Trustee will not be an agent of the Federal Government. Instead, its contractual relationships will be with each Qualified Issuer that receives a Guarantee under the CDFI Bond Guarantee Program. Each Qualified Issuer that receives a Guarantee will have entered into an Agreement to Guarantee with the Secretary of the Treasury, which describes terms and conditions that must be met in order to receive the Guarantee; a condition of such Agreement to Guarantee will be that the Qualified Issuer must enter into the Bond Trust Indenture with the Master Servicer/Trustee to undertake certain responsibilities under the CDFI Bond Guarantee Program.

9. Accordingly, no Federal funds will be appropriated, obligated or made available by the U.S. Department of the Treasury under this Notice or the Bond Trust Indenture. The Department of the Treasury will have no legal liability for any payment purposes under this Notice or the Bond Trust Indenture.

B. Master Servicer/Trustee Duties

1. Pursuant to the specific terms of the Bond Trust Indenture entered into with each Qualified Issuer that receives a Guarantee, the Master Servicer/Trustee will be responsible for performing duties including, but not limited to:

(a) The fiduciary power to enforce the terms of Bonds and the Bond Loans pursuant to the Bond Trust Indenture;

(b) Establishing and managing the funds and accounts set forth in the Regulations;

(c) Providing such reports as required;

(d) Overseeing the activities of Servicers and managing loan administration;

(e) Servicing and monitoring of Bond Issues with respect to repayment obligations to the Bond Purchaser and the terms of the Agreement to Guarantee;

(f) Tracking the movement of funds between the accounts of the Master Servicer/Trustee and all Servicers;

(g) Ensuring orderly receipt of the monthly remittance and servicing reports of the Servicers;

(h) Monitoring collection and foreclosure actions;

(i) Aggregating the reporting and distribution of funds to the Qualified Issuer, the CDFI Fund, and the Bond Purchaser, as necessary;

(j) Removing and replacing Servicers, as necessary;

(k) Performing systematic and timely reporting of Bond Loan performance compiled from Servicers' reports, and providing such reports as required in the Regulations;

(l) Ensuring proper distribution of funds to Eligible CDFIs, servicing the Bonds, and repayment to the Bondholder; and

(m) All other duties and related services that are customarily expected of a Master Servicer/Trustee, and as may be required by the CDFI Fund.

2. *Other duties and related services.* Other duties and related services that will be required of the Master Servicer/Trustee include, but are not limited to, loan administration and the roles of Special Servicer, Paying Agent, Collateral Agent, and Custodian (as those terms are customarily used and which duties may be enumerated in the Bond Trust Indenture), summarized as follows:

(a) *Loan administration.* At the CDFI Fund's request, and to the extent permitted by the applicable transaction documents, the Master Servicer/Trustee shall:

(1) Promptly report to the CDFI Fund: (A) Any failure by any Eligible CDFI to comply with its obligations or covenants, including those related to collateral; (B) to the extent a Secondary Loan is financed on a corporate finance basis (i.e., through a Credit Enhancement), any downgrade in the credit rating of the Eligible CDFI or any third-party guarantor by either Standard & Poor's Financial Services LLC, Moody's Investors Service or Fitch Ratings Ltd.; (C) any material change in the value of any project collateral, based on notices and updates provided by the Qualified Issuer or Eligible CDFIs; (D) problems or irregularities concerning any Secondary Loan, based on information obtained from the Qualified Issuers, Eligible CDFIs or in the course of any site visits conducted on behalf of the CDFI Fund; or (E) the inability of any Eligible CDFI to make payment on the Bond Loan or other debt obligation;

(2) Provide executive level briefings and decision support on a quarterly basis or more frequently in special situations that may require CDFI Fund or Master Servicer/Trustee intervention;

(3) Report findings of loan monitoring activities acceptable for utilization by the CDFI Fund for the purpose of credit subsidy re-estimates for Bond Issues, including all necessary reporting under the Federal Credit Reform Act of 1990, as amended;

(4) Maintain a comprehensive reporting format to track and report fees, extraordinary costs and expenses due and collected on individual projects (findings to be summarized in the monthly payment status and delinquency report);

(5) Perform reviews of the reports provided by Eligible CDFIs or Qualified Issuers to ensure that such reports comply with standardized information reporting requirements for Eligible CDFIs and required affirmative or negative covenants and specific reporting requirements in any related loan agreements (summary of findings to be provided in the monthly servicing oversight report);

(6) Promptly notify the CDFI Fund if it becomes aware of any reporting problems; and

(7) Perform such other loan administration duties as set forth in the Bond Trust Indenture.

(b) *Special Servicer.* The following Special Servicer duties (i.e., distressed asset management or resolution duties) shall be performed by the Master Servicer/Trustee in accordance with the Bond Trust Indenture:

(1) Negotiate the restructuring of Bond Loans that are in or about to enter into an event of default;

(2) Initiate foreclosure action and appointing a receiver;

(3) Enforce deficiency judgments;

(4) Assist and advise CDFI Fund in connection with the exercise of any of its remedies (e.g., restructuring of Bonds and collateral terms and conditions, continued operation of the project, foreclosure and the liquidation of the collateral), including intervening in payment reconciliation efforts, assisting in appraisal and liquidation of collateral, identifying potential buyers of the assets and analyzing bids;

(5) Oversee the collection and monitoring by Qualified Issuers of all scheduled and actual payment activities of each Bond (findings to be reported to CDFI Fund in the payment status and delinquency sub-report contained in the monthly servicing oversight report, such sub-report shall provide information as to past principal and interest payments, the timing of future principal and interest payments, and current loan balances for each project);

(6) With CDFI Fund direction, file any claims or take any action or institute any proceedings that the Master Servicer/Trustee may deem necessary or desirable for the collection of any of the collateral or otherwise to accomplish the purposes of any Bond documents;

(7) Exercise, in respect of the collateral, in addition to any other rights or remedies available to it and to the extent not in violation of applicable law, all the rights and remedies of a secured party under the Uniform Commercial Code (UCC);

(8) If requested by the CDFI Fund, assist and advise the CDFI Fund in connection with the liquidation of the collateral or any part thereof, including selecting specialists to assist in appraisal and liquidation of collateral, recommending liquidation strategies, identifying potential buyers of the assets and analyzing bids; ask for, demand, collect, sue for, recover; receive and give acquittance and receipts for moneys due and to become due under or in respect of any collateral;

(9) Occupy any premises where the collateral or any part thereof is assembled or located;

(10) Receive, endorse and collect any drafts or other instruments, documents and chattel paper in connection with the preceding clauses;

(11) Appear at hearings related to any bankruptcy proceedings as requested by CDFI Fund and provide testimony as necessary; and

(12) Perform such other Special Servicer duties as may be set forth in the Bond Trust Indenture.

(c) *Paying Agent.* The Master Servicer/Trustee shall perform or contract to perform duties customarily expected of a Paying Agent as such term is customarily used and which duties are enumerated in the Bond Trust Indenture.

(d) *Collateral Agent.* Any Eligible CDFI receiving a Bond Loan must grant a security interest in each Eligible CDFI's collateral on behalf of the Guarantor. The Master Servicer/Trustee, as a secured party under the UCC and other associated security documents, shall take all necessary administrative and enforcement actions with respect to the collateral on behalf of the Guarantor, if applicable, including, among others:

(1) Holding and managing, as appropriate, all accounts established by the Eligible CDFI for cash reserves and other cash receipts pursuant to the terms of the Bond Documents and Bond Loans documents;

(2) Monitoring Eligible CDFI compliance with covenants and agreements relating to collateral;

(3) Monitoring collateral-related regulatory and UCC filings to ensure that continuation statements, extensions or renewals, as applicable, are timely filed;

(4) Ensuring that collateral provided as security for any Bond Loan is properly maintained for the benefit of the Guarantor, if applicable, as the secured parties;

(5) Overseeing the Qualified Issuers' obligations to undertake those actions necessary to perfect and maintain liens, as applicable, on assets that are pledged as collateral for Bond Loans; and

(6) Performing such other Collateral Agent duties as may be set forth in the Bond Trust Indenture.

III. Submission of Proposals

A. Any organization wishing to propose to serve as the Master Servicer/Trustee (an Offeror) must submit a proposal to the CDFI Fund in the following format: No more than 40 single-sided pages; double spaced; 12 font size; Arial, Calibri, or Times New Roman font. The Offeror may choose how to allocate the 40 pages of narrative to address the evaluation criteria listed below. Organizations may also submit an appendix of no more than 25 pages of resumes, charts, graphs, and other illustrative materials. Organizations must submit: One (1) electronic copy of the proposal materials in Microsoft Word or Adobe PDF format by email to *bgp@cdfi.treas.gov* and (ii) five (5) printed, color copies of the proposal materials either: (i) By mail to the CDFI Fund, U.S. Department of the Treasury, 1500 Pennsylvania Avenue NW., Washington, DC 20220, or (ii) by commercial carrier to the attention of Lisa Jones, Program Manager, CDFI Bond Guarantee Program, CDFI Fund, 1801 L Street NW., 6th Floor, Washington, DC 20035.

B. The last day to contact the CDFI Fund with questions about this Notice is 5:00 p.m. ET on June 28, 2013.

C. If sent by mail, proposals must be postmarked no later than July 1, 2013. If delivered by commercial carrier, proposals must be received by the CDFI Fund by no later than 5:00 p.m. ET on July 1, 2013.

D. The CDFI Fund will not accept a proposal, or any portion of a proposal, delivered after the deadline.

E. The CDFI Fund will not grant exceptions or waivers to the requirements of this Notice.

F. Any proposal that is deemed ineligible or rejected will not be returned to the Offeror.

G. Proposals should be organized to respond to the criteria for completeness, minimum requirements, and substantive review indicated in section IV.B., directly below titled ''Minimum requirements (proposal outline).''

IV. Evaluation

A. *Completeness and Minimum Requirements Review.* The CDFI Fund will review each proposal to determine whether it is complete and the Offeror meets the minimum requirements described in this Notice. An incomplete proposal or one that does not meet minimum requirements will be rejected.

B. *Minimum requirements (proposal outline).* The Offeror must meet or exceed the following minimum requirements in order to be considered for the role of Master Servicer/Trustee:

1. The Offeror must demonstrate financial strength, stability, durability and liquidity as reflected in its corporate credit ratings and ratings history, as available. The Offeror must include its credit rating from a nationally recognized rating agency and net capital in its proposal. The Offeror must exhibit stability, durability, and adequate liquidity sufficient to withstand adverse market conditions for a multiyear period. The determination of financial condition shall be based on a review of audited financial statements, history of profitability and sources, levels and uses of capital and liquidity. If the Offeror is an affiliate or subsidiary of another entity, the assessment of financial condition should consider the financial strength of such affiliates. In cases where the Offeror exhibits financial weakness and is at risk of experiencing insolvency in the next two years, the Offeror will be deemed ineligible to perform Master Servicer/Trustee functions;

2. The Offeror (and any participating affiliate or subcontractor) must maintain

a minimum Long Term Corporate Unsecured Debt rating of ''A'' or equivalent from any two (2) nationally recognized statistical rating agencies;

3. The Offeror (and any participating affiliate or subcontractor) must have a capital surplus of $10 billion as of December 31, 2012;

4. The Offeror's Statement of Standards for Attestation Engagements No. 16 (SSAE 16) must demonstrate that its established internal controls include multiple levels of quality control, regulatory compliance and risk management oversight;

5. The Offeror must have insurance to cover risks inherent in managing a loan portfolio and in serving as a Collateral Agent for loan portfolio with at least 300 loans and a portfolio value of $10 billion;

6. The Offeror (and any participating affiliate or subcontractor) must currently have computer-based loan servicing, collateral tracking and management systems with supporting loan servicing, tracking and management policies and procedures sufficient to meet the requirements of the proposed responsibilities in Section II (Roles and responsibilities of the Master Servicer/Trustee) of this Notice, including a loan tracking system;

7. The Offeror must demonstrate prior experience as a master servicer for at least ten (10) bonds or debt securities with original principal balance of over $100 million each;

8. The Offeror or participating affiliate must demonstrate a history of Sarbanes-Oxley Act compliance;

9. The Offeror must demonstrate transactional restructuring experience as a Special Servicer with a minimum of 25 different restructuring transactions where the value of each transaction is a minimum of $10 million;

10. The Offeror must demonstrate that it (and any participating affiliate or subcontractor) is a State or Federally chartered financial institution having deposit-taking capabilities including, without limitation, the ability to hold and segregate funds designated for project accounts; and

11. The Offeror must demonstrate prior experience providing comparable services for a minimum of three (3) different governmental entities or financial stability programs.

C. *Substantive Review.*

1. If the Offeror has submitted a complete proposal that meets the minimum requirements, the CDFI Fund will conduct a substantive review in accordance with the criteria and procedures described in the Regulations and this Notice. The CDFI Fund reserves the right to contact the Offeror in person, or by telephone, email, or mail for the sole purpose of clarifying or confirming information. If contacted, the Offeror must respond within the CDFI Fund's time parameters or its proposal will be rejected. The CDFI Fund will consider the best value proposed by the Offeror through an equal consideration of technical capabilities, past performance, and proposed fees/cost structure.

2. The CDFI Fund will rank the proposals quantitatively after giving each criterion a score of 1 to 10, with 1 being generally unfavorable and 10 being generally favorable. Highest ranking proposals will be considered in the context of past performance and the pricing proposal. When selecting the Master Servicer/Trustee, the CDFI Fund shall give equal consideration to the pricing proposal and technical qualifications of the proposing organization.

3. The highest ranking proposals will be contacted for oral interviews during a time period that is selected by the CDFI Fund. Offerors that are contacted for interviews must ensure that their authorized representatives and lead management personnel who would be responsible for providing Master Servicer/Trustee services pursuant to this Notice are fully available to participate in such interviews.

4. The CDFI Fund will make a final selection of the Master Servicer/Trustee upon consideration of a written record that includes the highest-ranking proposals and staff recommendations.

5. The CDFI Fund expects to complete the selection process within approximately six (6) weeks of the date of this Notice. The table below demonstrates the approximate timeframe for the selection process so that respondents may plan their availability to respond to any additional communication to and with the CDFI Fund.

Proposal submission deadline.	July 1, 2013.
Review of minimum requirements.	July 15, 2013.
Substantive review of proposals.	July 15, 2013.
Oral interviews	July 19, 2013.
Final selection decision	July 22, 2013.
Formal announcement and completed process.	July 26, 2013.

D. *Evaluation criteria.* The CDFI Fund will use the following criteria to evaluate Offeror proposals which are eligible for substantive review and meet the completeness and minimum requirements:

1. Technical Capabilities.

(a) *Administration, servicing, and monitoring of loans that are similar to Bond Loans.* The Offeror must demonstrate organizational capacity and previous experience in administration, servicing, and monitoring of loans. Capacity and previous experience working with CDFIs and similar community development organizations will be viewed particularly favorably.

(b) *Financial strength and capacity.* The Offeror must demonstrate appropriate levels of total assets, net assets (or equivalent), debt/equity ratios, and other factors that indicate the financial wherewithal to perform the role of the Master Servicer/Trustee.

(c) *Managing regional or national intake, processing, or servicing operational systems and infrastructure of loans that are similar to Bond Loans.* The Offeror must demonstrate regional or national capacity and the ability to effectively integrate activities across a wide geographic footprint, including both rural and urban areas.

(d) *Managing regional or national originator communication systems and infrastructure.* The Offeror must demonstrate systems and infrastructure to support activities across a wide geographic footprint, including both rural and urban areas.

(e) *Developing and implementing training and other risk management strategies on a regional or national basis.* The Offeror must demonstrate an ongoing commitment to training to ensure staff knowledge of company procedures, industry techniques, and regulatory requirements.

(f) *Organization and staffing.* The Offeror must demonstrate low levels of employee turnover relative to industry peers, and organization that supports effective reporting that provides accountability and process efficiencies.

(g) *Restructuring, recovery, and foreclosure of loans that are similar to Bond Loans.* The Offeror must demonstrate organizational capacity and previous experience in restructuring, recovery, and foreclosure activities. Previous experience working with CDFIs and similar community development organizations will be viewed particularly favorably.

(h) *Compliance monitoring and reporting.* The Offeror must demonstrate systems that are efficiently integrated to avoid manual re-handling of data and the ability to satisfy reporting requirements under applicable OMB Circulars.

(i) *Internal controls.* The Offeror must demonstrate established internal controls that include multiple levels of quality control, regulatory compliance and risk management oversight.

(j) *The capacity and previous experience of the Offeror.* The Offeror must demonstrate the ability to perform the duties listed directly below. Previous experience working with CDFIs and similar community development organizations will be viewed particularly favorably. The Offeror must demonstrate previous experience performing the following duties:

(1) The fiduciary power to enforce the terms of Bonds and the Bond Loans pursuant to the Bond Trust Indenture;

(2) Establishing and managing the funds and accounts set forth in the Regulations;

(3) Providing such reports as required;

(4) Overseeing the activities of Servicers and managing loan administration;

(5) Servicing and monitoring of Bond Issues with respect to repayment obligations to the Bondholder and the terms of the Agreement to Guarantee;

(6) Tracking the movement of funds between the accounts of the Master Servicer/Trustee and all Servicers;

(7) Ensuring orderly receipt of the monthly remittance and servicing reports of the Servicers;

(8) Monitoring collection and foreclosure actions;

(9) Aggregating the reporting and distribution of funds to the Qualified Issuer, the CDFI Fund, and the Bondholder, as necessary;

(10) Removing and replacing Servicers, as necessary;

(11) Performing systematic and timely reporting of Bond Loan performance compiled from Servicers' reports, and providing such reports as required in the Regulations;

(12) Ensuring proper distribution of funds to Eligible CDFIs, servicing the Bonds, and repayment to the Bondholder; and

(13) All other duties and related services that are customarily expected of a Master Servicer/Trustee, and as may be required by the CDFI Fund.

2. *Other Proposal Content.* In addition to each of the selection criteria described, the Offerer's proposal must include the following information:

(a) A statement that the Offeror has the legal corporate authority to perform all of the services required of the Master Servicer/Trustee by the Bond Trust Indenture, the Regulations, and the Act;

(b) Assurances that no conflicts of interest exist as of the date of proposal submission with regards to carrying out the responsibilities of the Master Servicer/Trustee, and a description of the review and analysis that the Offeror conducted to reach this conclusion; and

(c) A description of the Offeror's approach to performing each of the Master Servicer/Trustee's responsibilities, which must reflect its review and understanding of the CDFI Bond Guarantee Program's documents and processes. Innovative proposals will convey the Offeror's understanding of Master Servicer/Trustee duties and responsibilities and will be favorably viewed, especially with regards to unique requirements of working with CDFIs or similar community development organizations.

3. *Past Performance.* In addition to the criteria enumerated above, the CDFI Fund will consider the quantity and quality of demonstrated past performance related to the role of Master Servicer/Trustee. Past experience working with CDFIs or similar community development organizations will be viewed particularly favorably. The determination of appropriate past performance shall be the sole discretion of the CDFI Fund, which will consider the materials provided by the Offeror as well as any external market research performed to verify the past performance described in the Proposal. The CDFI Fund will also evaluate past performance based on the information contained in the Federal Awardee Performance and Integrity Information System (FAPIIS) for up to thirty-six (36) months preceding the issuance of this Notice. Offerors will receive a pass, fail or neutral rating for past performance.

4. *Pricing Proposal.*

(a) The CDFI Fund will consider the Offeror's proposed fees and cost structure that will be paid by Eligible CDFIs. The Master Servicer/Trustee cannot charge fees that exceed those set forth in its Proposal, unless specifically authorized by the CDFI Fund.

(b) Offerors should propose a single combined fee for performing all of the duties listed in this Notice on a monthly basis. The all-in fee may be presented according to a methodology chosen by the Offeror, but the entity selected to serve as the Master Servicer/Trustee will be prohibited from increasing the monthly fee in excess of the methodology in the proposal. The proposed all-in fee and methodology must be appropriate to cover the costs of performing the duties entailed in this Notice, including those of the Special Servicer (i.e., distressed asset management or resolution).

(c) The following table is an example of a possible methodology to present the fee in terms of a basis point percentage of the outstanding principle balance of each Bond Loan, starting at 1.25 basis points (.0125%) and subject to a maximum increase of 1/100th of a basis point per month.

	Monthly basis points	Outstanding principle balance	Starting monthly fee
Example: Month 1	1.25 bps	$100,000,000	$12,500
Month 100	2.25 bps	63,000,000	14,175

V. Approval

The CDFI Fund will make a final selection of the Master Servicer/Trustee upon consideration of the Offeror's proposal and a written record that includes the highest-ranking proposals and staff recommendations. The CDFI Fund will notify the entity that is selected of such selection; however, the selection of the Master Servicer/Trustee will not become effective until the date of the Bond Trust Indenture entered into with each Qualified Issuer that is receives a Guarantee under the CDFI Bond Guarantee Program.

VI. Rejection

The CDFI Fund reserves the right to reject any proposal if information (including administrative errors) comes to the CDFI Fund's attention that either adversely affects the Offeror's eligibility or indicates fraud or mismanagement on its part. If the CDFI Fund determines any portion of the Offeror's proposal is incorrect in a material respect, the CDFI Fund reserves the right, in its sole discretion, to reject the proposal. The CDFI Fund reserves the right to change its eligibility and evaluation criteria and procedures, if the CDFI Fund deems it appropriate. If the changes materially affect the CDFI Fund's decision, the CDFI Fund will provide information about the changes through the CDFI Fund's Web site. The CDFI Fund's decisions are final: There is no right to appeal the decisions.

VII. Additional requirements

A. The Bond Trust Indenture shall be subject to review by the CDFI Fund for the purposes of assuring that CDFI Fund is not in any way liable for the payment of any fees and expenses specified and for conformity with other applicable guidelines. The CDFI Fund or any appointed representative may perform inspection and acceptance of services to be provided under the Bond Trust Indenture.

B. The services performed by the Master Servicer/Trustee shall be of the professional level and reflect expertise commensurate with standard commercial or industrial practice for activities of those required under a Bond Trust Indenture and shall be suitable for their intended purpose.

C. Through its powers under the Agreement to Guarantee, the CDFI Fund reserves the right to inspect and test all services and deliverables called for, to the extent practicable at all times and places, during the term of the Bond Trust Indenture.

D. In the event of rejection of any routine or ad hoc report, the Master Servicer/Trustee shall be notified in writing and shall have ten (10) working days, unless otherwise specified by CDFI Fund, from the date of issuance of such notification to correct the deficiencies and resubmit the report/deliverable. When the defects in services cannot be corrected by the Master Servicer/Trustee performance of resubmitting the report/deliverable, the CDFI Fund may require and force, through its powers under the Agreement to Guarantee, the Qualified Issuer to utilize its powers under the Bond Trust Indenture, that include taking the necessary action to ensure that future performance conforms to CDFI Fund requirements.

E. It is understood and agreed that the Master Servicer/Trustee and its employees, subcontractors, and consultants:

(1) Shall perform the services specified in the Bond Trust Indenture as independent contractors, not as employees or agents of the Federal Government;

(2) Shall be responsible for their own management and administration of the work required, and bear sole responsibility for complying with all technical, schedule, or financial requirements or constraints attendant to the performance of the Bond Trust Indenture;

(3) Shall be free from any direct or indirect supervision or control by any Federal Government employee; and

(4) Shall, pursuant to the Bond Trust Indenture, comply with such general direction of authorized Federal Government employees as is necessary and appropriate to ensure accomplishment of the enumerated requirements and objectives.

IX. Agency Contact

A. The CDFI Fund will respond to questions concerning this Notice between the hours of 9:00 a.m. and 5:00 p.m. ET, starting on the date that the Notice is published through one (1) business day prior to the proposal deadline. During the one (1) business day prior to the proposal deadline, the CDFI Fund will not respond to questions from prospective Offerors until after the proposal deadline. Applications and other information regarding the CDFI Fund and the CDFI Bond Guarantee Program may be obtained from the CDFI Fund's Web site at *http://www.cdfifund.gov.* In its discretion, the CDFI Fund may post on its Web site responses to questions of general applicability regarding this Notice.

B. Interested parties may contact the CDFI Bond Guarantee Program by calling (202) 622–6355 or emailing *bgp@cdfi.treas.gov.*

C. The CDFI Fund will use the contact information set forth in the Offeror's proposal to communicate. It is important, therefore, that the Offeror provides accurate contact information in its proposal, including contact names, addresses, email addresses, fax and telephone numbers.

X. Information Sessions and Outreach

The CDFI Fund may conduct webinars or host information sessions for organizations that are considering applying to serve in the role of Master Servicer/Trustee. For further information, please visit the CDFI Fund's Web site at *http://www.cdfifund.gov.*

Authority: Pub. L. 111–240, 12 U.S.C. 4713a, 12 CFR part 1808.

Dated: June 10, 2013.

Dennis Nolan,

Deputy Director, Community Development Financial Institutions Fund.

[FR Doc. 2013–14157 Filed 6–13–13; 8:45 am]

BILLING CODE 4810–70–P

DEPARTMENT OF THE TREASURY

United States Mint

Citizens Coinage Advisory Committee; Public Meeting

ACTION: Notification of Citizens Coinage Advisory Committee June 25, 2013, Public Meeting.

SUMMARY: Pursuant to United States Code, Title 31, section 5135(b)(8)(C), the United States Mint announces the Citizens Coinage Advisory Committee (CCAC) public meeting scheduled for June 25, 2013.

Date: June 25, 2013.

Time: 9:30 a.m. to 2:30 p.m.

Location: Conference Room A, United States Mint, 801 9th Street NW., Washington, DC 20220.

Subject: Review and discussion of candidate designs for the Code Talker Recognition Congressional Medal Program for the Cherokee Nation, Meskwaki Nation (Sac and Fox), Seminole Nation, Fort Peck Assinboine and Sioux Tribes, Ho-Chunk Nation, OgLala Sioux Nation, and Yankton Sioux Nation; review and discussion of design direction for the 2015 America the Beautiful Quarters Program; and review and consideration of the Fiscal Year 2013 Annual Report.

Interested persons should call the CCAC HOTLINE at (202) 354–7502 for the latest update on meeting time and room location.

In accordance with 31 U.S.C. 5135, the CCAC:

- Advises the Secretary of the Treasury on any theme or design proposals relating to circulating coinage, bullion coinage, Congressional Gold Medals, and national and other medals.
- Advises the Secretary of the Treasury with regard to the events, persons, or places to be commemorated by the issuance of commemorative coins in each of the five calendar years succeeding the year in which a commemorative coin designation is made.
- Makes recommendations with respect to the mintage level for any commemorative coin recommended.

FOR FURTHER INFORMATION CONTACT: William Norton, United States Mint Liaison to the CCAC; 801 9th Street NW.; Washington, DC 20220; or call 202–354–7200.

Any member of the public interested in submitting matters for the CCAC's consideration is invited to submit them by fax to the following number: 202–756–6525.

Authority: 31 U.S.C. 5135(b)(8)(C).

Dated: June 10, 2013.

Richard A. Peterson,

Acting Director, United States Mint.

[FR Doc. 2013–14143 Filed 6–13–13; 8:45 am]

BILLING CODE P

DEPARTMENT OF VETERANS AFFAIRS

[OMB Control No. 2900—NEW]

Proposed Information Collection Activity: [Beneficiary Travel Mileage Reimbursement Application Form]; Comment Request

AGENCY: Veterans Health Administration, Department of Veterans Affairs.

ACTION: Notice.

SUMMARY: The Veterans Health Administration (VHA) is announcing an opportunity for public comment on the proposed collection of certain information by the agency. Under the Paperwork Reduction Act (PRA) of 1995, Federal agencies are required to publish notice in the **Federal Register** concerning each proposed collection of information, including each proposed revision of a currently approved collection, and allow 60 days for public comment in response to the notice. This notice solicits comments on information needed to determine mileage reimbursement to qualified Veterans or other claimants who incur expense in traveling to healthcare.

DATES: Written comments and recommendations on the proposed collection of information should be received on or before August 13, 2013.

ADDRESSES: Submit written comments on the collection of information through the Federal Docket Management System (FDMS) at *www.Regulations.gov*; or to Cynthia Harvey-Pryor, Veterans Health Administration (10B4), Department of Veterans Affairs, 810 Vermont Avenue NW, Washington, DC 20420 or email: *cynthia.harvey-pryor@va.gov.* Please refer to ''OMB Control No. 2900—NEW (Beneficiary Travel Mileage Reimbursement Application Form)'' in any correspondence. During the comment period, comments may be viewed online through FDMS.

FOR FURTHER INFORMATION CONTACT: Cynthia Harvey-Pryor at (202) 461–5870 or Fax (202) 495–5397.

SUPPLEMENTARY INFORMATION: Under the PRA of 1995 (Pub. L. 104–13; 44 U.S.C., 3501—3521), Federal agencies must obtain approval from the Office of Management and Budget (OMB) for each collection of information they conduct or sponsor. This request for comment is being made pursuant to Section 3506(c)(2)(A) of the PRA.

With respect to the following collection of information, VHA invites comments on: (1) Whether the proposed collection of information is necessary for the proper performance of VHA's functions, including whether the information will have practical utility; (2) the accuracy of VHA's estimate of the burden of the proposed collection of information; (3) ways to enhance the quality, utility, and clarity of the information to be collected; and (4) ways to minimize the burden of the collection of information on respondents, including through the use of automated collection techniques or the use of other forms of information technology.

Titles: Beneficiary Travel Mileage Reimbursement Application Form, VA Form 10–3542.

OMB Control Number: 2900–NEW (Beneficiary Travel Mileage Reimbursement Application Form).

Type of Review: New data collection.

Abstract: The purpose of the information collection is for beneficiaries to apply for the beneficiary travel mileage reimbursement benefit in an efficient, convenient and accurate manner. VHA must determine the identity of the claimant, the dates and length of the trip being claimed based on addresses of starting and ending points, and whether expenses other than mileage are being claimed. The form is used only when the claimant chooses not to apply verbally and is provided for their convenience. This collection of information is necessary to enable the VHA to provide this benefit and appropriately ensure that funds are being paid to the correct claimant.

Affected Public: Individuals or Households.

Estimated Total Annual Burden: 580,000.

Estimated Average Burden per Respondent: 3 minutes.

Frequency of Response: Annually.

Estimated Number of Respondents: 11,600,000.

Dated: June 11, 2013.

By direction of the Secretary.

Crystal Rennie,

VA Clearance Officer, U.S. Department of Veterans Affairs.

[FR Doc. 2013–14176 Filed 6–13–13; 8:45 am]

BILLING CODE 8320–01–P

DEPARTMENT OF VETERANS AFFAIRS

Privacy Act of 1974; System of Records

AGENCY: Department of Veterans Affairs.

ACTION: Notice of Amendment to System of Records.

SUMMARY: As required by the Privacy Act of 1974, 5 U.S.C. 552a(e), notice is hereby given that the Department of Veterans Affairs (VA) is amending the system of records currently titled ''All Employee Survey—VA'' (160VA10A2) as set forth in the **Federal Register** (75 FR 3787). VA is amending the system by revising the System Location, Categories of Records in the System, Purpose, Routine Uses of Records Maintained in the System, Storage, Retrievability, Safeguard, and System Manager and Address.

DATES: Comments on the amendment of this system of records must be received no later than July 15, 2013. If no public comment is received, the amended system will become effective July 15, 2013.

ADDRESSES: Written comments may be submitted through *www.Regulations.gov;* by mail or hand-delivery to Director, Regulations Management (02REG), Department of Veterans Affairs, 810 Vermont Avenue NW., Room 1068, Washington, DC 20420; or by fax to (202) 273–9026. Comments received will be available for public inspection in the Office of Regulation Policy and Management, Room 1063B, between the hours of 8:00 a.m. and 4:30 p.m., Monday through Friday (except holidays). Please call (202) 461–4902 (this is not a toll-free number) for an appointment. In addition, during the comment period, comments may be viewed online through the Federal Docket Management System at *www.Regulations.gov.*

FOR FURTHER INFORMATION CONTACT: Department of Veterans Affairs, Director of Veterans Health Administration's (VHA) National Center for Organization Development (NCOD), 11500 Northlake Drive, Suite 260, Cincinnati, OH 45249; telephone (513) 247–4680.

SUPPLEMENTARY INFORMATION:

I. Description of Proposed Systems of Records

The All Employee Survey—VA is a data repository that stores all data gathered from the administration of the All Employee Survey taken by VA employees.

II. Proposed Routine Use Disclosures of Data in the System

We are proposing to establish the following Routine Use disclosures of information maintained in the system:

To the extent that records contained in the system include information protected by 38 U.S.C. 7332, such as, medical treatment information related to drug abuse, alcoholism or alcohol abuse, sickle cell anemia or infection with the human immunodeficiency virus, that information cannot be disclosed under a routine use unless there is also specific statutory authority permitting disclosure.

1. The record of an individual who is covered by a system of records may be disclosed to a Member of Congress, or a staff person acting for the Member, when the Member or staff person requests the record on behalf of and at the written request of the individual.

VA must be able to provide information about individuals to adequately respond to inquiries from Members of Congress at the request of constituents who have sought their assistance.

2. Disclosure may be made to the National Archives and Records Administration and the General Services Administration in records management inspections conducted under authority of Title 44, Chapter 29, of the United States Code. National Archives and Records Administration and General Services Administration are responsible for management of old records no longer actively used, but which may be appropriate for preservation, and for the physical maintenance of the Federal Government's records.

VA must be able to provide the records to National Archives and Records Administration and General Services Administration in order to determine the proper disposition of such records.

3. VA may disclose information from this system of records to the Department of Justice, either on VA's initiative or in response to Department of Justice's request for the information, after either VA or Department of Justice determines that such information is relevant to Department of Justice's representation of the United States or any of its components in legal proceedings before a court or adjudicative body, provided that, in each case, the agency also determines prior to disclosure that release of the records to the Department of Justice is a use of the information contained in the records that is compatible with the purpose for which VA collected the records. VA, on its own initiative, may disclose records in this system of records in legal proceedings before a court or administrative body after determining that the disclosure of the records to the court or administrative body is a use of the information contained in the records that is compatible with the purpose for which VA collected the records.

VA must be able to provide information to Department of Justice in litigation where the United States or any of its components is involved or has an interest. A determination would be made in each instance that under the circumstances involved, the purpose is compatible with the purpose for which Veterans Affairs collected the information. This routine use is distinct from the authority to disclose records in response to a court order under subsection (b)(11) of the Privacy Act, 5 U.S.C. 552(b)(11), or any other provision of subsection (b), in accordance with the court's analysis in *Doe* v. *DiGenova,* 779 F.2d 74, 78–84 (D.C. Cir. 1985) and *Doe* v. *Stephens,* 851 F.2d 1457, 1465–67 (D.C. Cir. 1988).

4. Disclosure of relevant information may be made to individuals, organizations, private or public agencies, or other entities with whom VA has a contract or agreement or where there is a subcontract to perform such services as VA may deem practicable for the purposes of laws administered by VA, in order for the contractor or subcontractor to perform the services of the contract or agreement. This routine use, which also applies to agreements that do not qualify as contracts defined by Federal procurement laws and regulations, is consistent with Office of Management and Budget guidance in Office of Management and Budget Circular A–130, App. I, paragraph 5a(1)(b) that agencies promulgate routine uses to address disclosure of Privacy Act-protected information to contractors in order to perform the services contracts for the agency.

5. VA may disclose on its own initiative any information in the system, except the names and home addresses of veterans and their dependents, that is relevant to a suspected or reasonably imminent violation of the law whether civil, criminal, or regulatory in nature and whether arising by general or program statute or by regulation, rule, or order issued pursuant thereto, to a Federal, state, local, tribal, or foreign agency charged with the responsibility of investigating or prosecuting such violation, or charged with enforcing or implementing the statute, regulation, rule, or order. VA may also disclose on its own initiative the names and addresses of veterans and their dependents to a Federal agency charged with the responsibility of investigating or prosecuting civil, criminal, or regulatory violations of law, or charged with enforcing or implementing the statute, regulation, or order issued pursuant thereto.

VA must be able to provide on its own initiative information that pertains to a violation of laws to law enforcement authorities in order for them to investigate and enforce those laws. Under 38 U.S.C. 5701(a) and (f), VA may only disclose the names and addresses of veterans and their dependents to Federal entities with law enforcement responsibilities. This is distinct from the authority to disclose records in response to a qualifying request from a law enforcement entity, as authorized by Privacy Act subsection 5 U.S.C. 552a(b)(7).

6. Disclosure to other Federal agencies may be made to assist such agencies in preventing and detecting possible fraud or abuse by individuals in their operations and programs.

This routine use permits disclosures by the Department to report a suspected incident of identity theft and provide information and/or documentation related to or in support of the reported incident.

7. VA may, on its own initiative, disclose any information or records to appropriate agencies, entities, and persons when (1) VA suspects or has confirmed that the integrity or confidentiality of information in the system of records has been compromised; (2) the Department has determined that as a result of the suspected or confirmed compromise, there is a risk of embarrassment or harm to the reputations of the record subjects, harm to economic or property interests, identity theft or fraud, or harm to the security, confidentiality, or integrity of this system or other systems or programs (whether maintained by the Department or another agency or entity) that rely upon the potentially compromised information; and (3) the disclosure is to agencies, entities, or persons whom VA determines are reasonably necessary to assist or carry out the Department's efforts to respond to the suspected or confirmed compromise and prevent, minimize, or remedy such harm. This routine use permits disclosures by the Department to respond to a suspected or confirmed data breach, including the conduct of any risk analysis or provision of credit protection services as provided in 38 U.S.C. 5724, as the terms are defined in 38 U.S.C. 5727.

III. Compatibility of the Proposed Routine Uses

The Privacy Act permits Veterans Affairs to disclose information about individuals without their consent for a routine use when the information will be used for a purpose that is compatible with the purpose for which we collected the information. In all of the routine use disclosures described above, the recipient of the information will use the information in connection with a matter relating to one of VA's programs, will use the information to provide a benefit to VA, or disclosure is required by law.

The notice of intent to publish and an advance copy of the system notice have been sent to the appropriate Congressional committees and to the Director of the Office of Management and Budget as required by 5 U.S.C. 552a(r) (Privacy Act) and guidelines issued by Office of Management and Budget (65 FR 77677), December 12, 2000.

Approved: May 23, 2013.

Jose D. Riojas,

Interim Chief of Staff, Department of Veterans Affairs.

SOR# 160VA10A2

SYSTEM NAME:

''All Employee Survey-VA'' 160VA10A2.

SYSTEM LOCATION:

Records are maintained at the National Center for Organization Development (NCOD), 11500 Northlake Drive, Suite 260, Cincinnati, OH 45249. A copy of the system data is saved on CD and stored at a secure locked safe at the same location.

CATEGORIES OF INDIVIDUALS COVERED BY THE SYSTEM:

The records include information concerning all VA employees.

CATEGORIES OF RECORDS IN THE SYSTEM:

The records include two formats.

1. Numerically expressed satisfaction ratings and agreement ratings of questions that ask about specific aspects of workplace environment.

2. Starting from year 2012, records include open-ended text comments provided in response to questions about workplace environment. Instructions to open-ended comments, ask respondents not to use any names or other individually identifiable information about self or others.

The numeric and text records may include information related to:

1. All Employee Survey responses by workgroup.

- 7-digit workgroup organization code.
- Workgroup code identifies a valid VA organizational work unit.
- These identification codes will identify work units rather than specific individuals. VA will provide a table of approximately 15,000 to 40,000 valid workgroup organization codes prior to survey administration.

2. All Employee Survey responses by demographics.

- Gender.
- Age in groups of decades.
- Race.
- National origin.
- Incumbency in VA.
- Level of supervisory responsibility.
- Main type of occupational setting.
- Main type of service provided.
- Prior participation in VA trainings.
- Prior service in the U.S. Armed Forces.

3. All Employee Survey responses by national function file.

- Category of workgroup—provides a functional description of the workgroup, by connecting it to a list of services and locations within the working structure of VA organizations. Local survey coordinators (not survey respondents) describe workgroups on this category at the time the work units are assigned unique 7-digit codes. There are close to 100 categories.

4. All Employee Survey responses by occupational group.

- This is a 3-digit code provided to each individual respondent who then can use it to categorize their occupation through self-report.
- There are over 100 codes; they are not job occupation series codes. It is a code developed for the All Employee Survey.

5. All Employee Survey responses by question and modality.

- The response is provided by the interactive Web-based survey, telephone, or paper submission and response type captured.

6. All Employee Survey responses by organization and sub organization title, type, and function.

- The workgroup identifies organization, sub organization if applicable, organization type, and function for which the response is provided.

7. All Employee Survey responses by response rate.

- Responses are stored at the individual level, response rates are reported at the work unit lowest level, and then hierarchically rolled upward in summary totals to the next level within the organization. The hierarchy is based on the organization structure (facility and parents) and the 7-digit workgroup organization code.

Reporting of response data follows the rule of 10 respondents for any survey scores reported for any specific (identified) organizational units or demographic groups. For applied managerial analyses and action planning, any response data for identified organizational units or demographic groups for any survey values that are based on having less than 10 respondents in a group will never be released from the data repository. For scientific statistical analyses and use in publications, data from identified organizational units or demographic groups with less than 10 respondents are released only upon approval of the Organization Assessment Subcommittee (OASC) Chair(s), based on recommendation of a professional committee of organizational research experts. Such use of such data is explicitly limited to a specific requestor, project, and purpose (as detailed in 2, section: Purposes), with a strong data security plan ascertained. Any results of scientific use of the All Employee Survey data will be reported at aggregate level only, with no individual or organizational identities attached.

8. All Employee Survey responses by date and time survey taken.

- Date and time response submitted.

9. All Employee Survey responses by content areas.

AUTHORITY FOR MAINTENANCE OF THE SYSTEM:

Title 38, United States Code, section 501a.

PURPOSE(S):

The records and information may be used for applied managerial as well as scientific statistical analysis of employee satisfaction on quality and quantity of work, personal safety, promotion and training opportunity, fair and equitable treatment, and work/family balance.

For applied managerial use, All Employee Survey records and information pertaining to data validation, evaluation of personnel/organizational management and staffing satisfaction and culture, including workforce effectiveness are shared with facilities and with local, regional and national VA leaders. Action plans, development of goals and follow-up performance measures are developed as a result.

For scientific statistical use, All Employee Survey records and information may be used in research and management studies that support optimal functioning of VA organizations and programs. Such use must balance technical requirements of research designs which ensure scientifically plausible answers, with the need to

protect confidentiality of VA survey respondents and of small respondent groups. Each proposal involving use of All Employee Survey data for studies is therefore evaluated by a professional committee: the Data Use Agreement committee of the OASC of the VHA National Leadership Council. The evaluation serves to ascertain scientific merits, benefit for the VA, existence of a strong data protection plan, and based on these considerations to determine the appropriate level of aggregation of the records released for the specific described purpose.

ROUTINE USES OF RECORDS MAINTAINED IN THE SYSTEM, INCLUDING CATEGORIES OF USERS AND THE PURPOSES OF SUCH USES:

To the extent that records contained in the system include information protected by 45 CFR parts 160 and 164, such as, individually identifiable health information, and 38 U.S.C. 7332, such as, medical treatment information related to drug abuse, alcoholism or alcohol abuse, sickle cell anemia or infection with the human immunodeficiency virus, that information cannot be disclosed under a routine use unless there is also specific statutory authority in 38 U.S.C. 7332 and regulatory authority in 45 CFR parts 160 and 164 permitting disclosure.

1. The record of an individual who is covered by a system of records may be disclosed to a Member of Congress, or a staff person acting for the Member, when the Member or staff person requests the record on behalf of and at the written request of the individual.

2. Disclosure may be made to the National Archives and Records Administration and the General Services Administration in records management inspections conducted under authority of Title 44, Chapter 29, of the United States Code.

3. Veterans Affairs may disclose information from this system of records to the Department of Justice, either on Veterans Affairs' initiative or in response to Department of Justice's request for the information, after either VA or Department of Justice determines that such information is relevant to Department of Justice's representation of the United States or any of its components in legal proceedings before a court or adjudicative body, provided that, in each case, the agency also determines prior to disclosure that release of the records to the Department of Justice is a use of the information contained in the records that is compatible with the purpose for which VA collected the records. VA, on its own initiative, may disclose records in this system of records in legal proceedings before a court or administrative body after determining that the disclosure of the records to the court or administrative body is a use of the information contained in the records that is compatible with the purpose for which VA collected the records.

4. Disclosure of relevant information may be made to individuals, organizations, private or public agencies, or other entities with whom VA has a contract or agreement or where there is a subcontract to perform such services as VA may deem practicable for the purposes of laws administered by VA, in order for the contractor or subcontractor to perform the services of the contract or agreement.

5. VA may disclose on its own initiative any information in the system, except the names and home addresses of veterans and their dependents, that is relevant to a suspected or reasonably imminent violation of the law whether civil, criminal, or regulatory in nature and whether arising by general or program statute or by regulation, rule, or order issued pursuant thereto, to a Federal, state, local, tribal, or foreign agency charged with the responsibility of investigating or prosecuting such violation, or charged with enforcing or implementing the statute, regulation, rule, or order. VA may also disclose on its own initiative the names and addresses of veterans and their dependents to a Federal agency charged with the responsibility of investigating or prosecuting civil, criminal, or regulatory violations of law, or charged with enforcing or implementing the statute, regulation, or order issued pursuant thereto.

6. Disclosure to other Federal agencies may be made to assist such agencies in preventing and detecting possible fraud or abuse by individuals in their operations and programs.

7. VA may, on its own initiative, disclose any information or records to appropriate agencies, entities, and persons when (1) VA suspects or has confirmed that the integrity or confidentiality of information in the system of records has been compromised; (2) the Department has determined that as a result of the suspected or confirmed compromise, there is a risk of embarrassment or harm to the reputations of the record subjects, harm to economic or property interests, identity theft or fraud, or harm to the security, confidentiality, or integrity of this system or other systems or programs (whether maintained by the Department or another agency or entity) that rely upon the potentially compromised information; and (3) the disclosure is to agencies, entities, or persons whom VA determines are reasonably necessary to assist or carry out the Department's efforts to respond to the suspected or confirmed compromise and prevent, minimize, or remedy such harm. This routine use permits disclosures by the Department to respond to a suspected or confirmed data breach, including the conduct of any risk analysis or provision of credit protection services as provided in 38 U.S.C. 5724, as the terms are defined in 38 U.S.C. 5727.

POLICIES AND PRACTICES FOR STORING, RETRIEVING, ACCESSING, RETAINING, AND DISPOSING OF RECORDS IN THE SYSTEM:

STORAGE:

Records are maintained on the server with a backup copy on compact disk in the VHA National Center for Organization Development (NCOD) Program Office, 11500 Northlake Drive, Suite 260, Cincinnati, OH 45249.

RETRIEVABILITY:

Records may be retrieved by organization name or other assigned identifiers of the respondent groups on whom they are maintained. None of the All Employee Survey records can be confidently ascribed to specific individual respondents.

SAFEGUARDS:

1. Access to VA working and storage areas is restricted to VA employees on a ''need-to-know'' basis; strict control measures are enforced to ensure that disclosure to these individuals is also based on this same principle. Generally, VA file areas are locked after normal duty hours and the facilities are protected from outside access by the Federal Protective Service or other security personnel.

2. Access to computer rooms at health care facilities is generally limited by appropriate locking devices and restricted to authorized VA employees and vendor personnel. Automatic Data Processing peripheral devices are placed in secure areas. Access to information stored on automated storage media at other VA locations is controlled by individually unique passwords/codes employees are limited to only that information in the file which is needed in the performance of their official duties.

3. Access to the VHA NCOD Server is restricted to Center employees, Federal Protective Service, and other security personnel. Access to computer rooms is restricted to authorized operational personnel through electronic scanning and locking devices. All other persons gaining access to computer rooms are escorted after identity verification and

log entry to track person, date, time in, and time out of the room. Information stored in the computer may be accessed by authorized VA employees at remote locations including VA health care facilities, Information Systems Centers, VA Central Office, and Veterans Integrated Service Networks. Access is controlled by individually unique passwords/codes which must be changed periodically by the employee. The compact disk is stored in the NCOD Office in Cincinnati, Ohio, and is accessible by restricted, authorized personnel through electronic scanning and locking devices.

RETENTION AND DISPOSAL:

Paper records are scanned and digitized for viewing electronically and are destroyed after they have been scanned onto disks, and the electronic copy determined to be an accurate and complete copy of the paper record scanned.

SYSTEM MANAGER(S) AND ADDRESS:

Official responsible for policies and procedures; VHA National Center for Organization Development (NCOD). Officials maintaining the system; Sue Dyrenforth of NCOD, 11500 Northlake Drive, Suite 260, Cincinnati, OH 45249.

NOTIFICATION PROCEDURE:

Individuals who wish to determine whether this system of records contains information about them should contact the Veterans Affairs facility location at which they are or were employed or made or have contact. Inquiries should include the person's full name, social security number, dates of employment, date(s) of contact, and return address.

RECORD ACCESS PROCEDURE:

Individuals seeking information regarding access to and contesting of records in this system may write, call or visit the VA facility location where they are or were employed or made contact.

CONTESTING RECORD PROCEDURES:

(See Record Access Procedures above.)

RECORD SOURCE CATEGORIES:

Information in this system of records is provided by VA employees associated to VA medical centers and corporate offices.

[FR Doc. 2013–14191 Filed 6–13–13; 8:45 am]

BILLING CODE 8320–01–P

FEDERAL REGISTER

Vol. 78 Friday,

No. 115 June 14, 2013

Part II

Environmental Protection Agency

40 CFR Part 80

Regulation of Fuels and Fuel Additives: RFS Pathways II and Technical Amendments to the RFS 2 Standards; Proposed Rule

ENVIRONMENTAL PROTECTION AGENCY

40 CFR Part 80

[EPA–HQ–OAR–2012–0401; FRL–9816–3]

RIN 2060—AR21

Regulation of Fuels and Fuel Additives: RFS Pathways II and Technical Amendments to the RFS 2 Standards

AGENCY: Environmental Protection Agency (EPA).

ACTION: Notice of Proposed Rulemaking.

SUMMARY: In this Notice of Proposed Rulemaking, EPA is proposing amendments to three separate sets of regulations relating to fuels. First, EPA is proposing to amend certain of the renewable fuels standard (RFS2) program regulations. We believe these proposals will facilitate the introduction of new renewable fuels as well as improve implementation of the program. This proposal includes various changes related to biogas, including changes related to the revised compressed natural gas (CNG)/liquefied natural gas (LNG) pathway and amendments to various associated registration, recordkeeping, and reporting provisions. This proposed regulation includes the addition of new pathways for renewable diesel, renewable naphtha, and renewable electricity (used in electric vehicles) produced from landfill biogas. Adding these new pathways will enhance the ability of the biofuels industry to supply advanced biofuels, including cellulosic biofuels, which greatly reduce the greenhouse gas emissions (GHG) compared to the petroleum-based fuels they replace. It also addresses ''nameplate capacity'' issues for certain production facilities that do not claim exemption from the 20% greenhouse gas (GHG) reduction threshold. In this notice, EPA addresses issues related to crop residue and corn kernel fiber and proposes an approach to determining the volume of cellulosic RINs produced from various cellulosic feedstocks. We also include a lifecycle analysis of advanced butanol and discuss the potential to allow for commingling of compliant products at the retail facility level as long as the environmental performance of the fuels would not be detrimental. Several other amendments to the RFS2 program are included.

Second, EPA is also proposing various changes to the E15 misfueling mitigation regulations (E15 MMR). Among the E15 changes proposed are technical corrections and amendments to sections dealing with labeling, E15 surveys, product transfer documents, and prohibited acts. We also propose to amend the definitions in order to address a concern about the rounding of test results for ethanol content violations.

Lastly, EPA is proposing changes to the survey requirements associated with the ultra-low sulfur diesel (ULSD) program.

DATES: Comments must be received on or before July 15, 2013. We do not expect a request for a public hearing. However, if we receive a request for a public hearing by July 1, 2013 we will publish information related to the timing and location of the hearing and the timing of a new deadline for public comments.

ADDRESSES: Submit your comments, identified by Docket ID No. EPA–HQ–OAR–2012–0401, by one of the following methods:

- *http://www.regulations.gov.* Follow the on-line instructions for submitting comments.
- *Email: a-and-r-docket@epa.gov,* Attention Air and Radiation Docket ID No. EPA–HQ–OAR–2012–0401.
- *Mail:* Air and Radiation Docket, Docket No. EPA–HQ–OAR–2012–0401, Environmental Protection Agency, Mail code: 6406J, 1200 Pennsylvania Ave. NW., Washington, DC 20460. Please include a total of two (2) copies.
- *Hand Delivery:* EPA Docket Center, EPA/DC, EPA West, Room 3334, 1301 Constitution Ave. NW., Washington, DC 20460, Attention Air and Radiation Docket, ID No. EPA–HQ–OAR–2012–0401. Such deliveries are only accepted during the Docket's normal hours of operation, and special arrangements should be made for deliveries of boxed information.

Instructions: Direct your comments to Docket ID No. EPA–HQ–OAR–2012–0401. EPA's policy is that all comments received will be included in the public docket without change and may be made available online at *www.regulations.gov,* including any personal information provided, unless the comment includes information claimed to be Confidential Business Information (CBI) or other information whose disclosure is restricted by statute. Do not submit information that you consider to be CBI or otherwise protected through www.regulations.gov or email. The *www.regulations.gov* Web site is an ''anonymous access'' system, which means EPA will not know your identity or contact information unless you provide it in the body of your comment. If you send an email comment directly to EPA without going through *www.regulations.gov,* your email address will be automatically captured and included as part of the comment that is placed in the public docket and made available on the Internet. If you submit an electronic comment, EPA recommends that you include your name and other contact information in the body of your comment and with any disk or CD–ROM you submit. If EPA cannot read your comment due to technical difficulties and cannot contact you for clarification, EPA may not be able to consider your comment. Electronic files should avoid the use of special characters, any form of encryption, and be free of any defects or viruses. For additional information about EPA's public docket visit the EPA Docket Center homepage at *http://www.epa.gov/epahome/dockets.htm.*

Docket: All documents in the docket are listed in the *www.regulations.gov* index. Although listed in the index, some information is not publicly available, e.g., CBI or other information for which disclosure is restricted by statute. Certain other material, such as copyrighted material, will be publicly available only in hard copy. Publicly available docket materials are available either electronically in *www.regulations.gov* or in hard copy at the Air and Radiation Docket, EPA/DC, EPA West, Room 3334, 1301 Constitution Ave. NW., Washington, DC. The Public Reading Room is open from 8:30 a.m. to 4:30 p.m., Monday through Friday, excluding legal holidays. The telephone number for the Public Reading Room is (202) 566–1744, and the telephone number for the Air and Radiation Docket is (202) 566–1742.

FOR FURTHER INFORMATION CONTACT: Joseph Sopata, Chemist, Office of Transportation and Air Quality, Mail Code: 6406J, U.S. Environmental Protection Agency, 1200 Pennsylvania Avenue NW., 20460; telephone number: (202) 343–9034; fax number: (202) 343–2801; email address: *sopata.joe@epa.gov.*

SUPPLEMENTARY INFORMATION: This preamble follows the following outline:

I. Why is EPA taking this action?
II. Does this action apply to me?
III. What should I consider as I prepare my comments for EPA?
IV. Executive Summary
V. Renewable Fuel Standard (RFS2) Program Amendments
A. Approving Cellulosic Volumes From Cellulosic Feedstocks
1. Variability in Cellulosic Content Estimates of Feedstocks
2. Characteristics of the Amount of the Final Fuel Derived From Cellulosic Materials
3. Previous Precedents

4. Alternative Approaches
B. Lifecycle Greenhouse Gas Emissions Analysis for Renewable Electricity, Renewable Diesel and Naphtha Produced From Landfill Biogas
1. Feedstock Production
2. Determination of the Cellulosic Composition of Landfill Biogas
3. Fuel Production—General Considerations
4. Fuel Production for Renewable Electricity
5. Fuel Production, Transport and Tailpipe Emissions for Renewable Diesel and Naphtha
C. Proposed Regulatory Amendments Related to Biogas
1. Changes Applicable to the Revised CNG/LNG Pathway From Biogas
2. New Registration (Contract Requirements) for Renewable Electricity and Fuels Produced From Biogas That Qualify as Renewable Fuel and That are Registered for RIN Generation
3. Changes Applicable to all Biogas Related Pathways for RIN Generation
4. Changes Applicable To Process Electricity Production Requirement for the Biogas-Derived Cellulosic Diesel and Naphtha Pathways
D. Amendment to the Definition of ''Crop Residue'' and Definition of a Pathway for Corn Kernel Fiber
E. Consideration of Advanced Butanol Pathway
1. Proposed New Pathway
2. Butanol, Biobutanol, and Volatility Considerations
F. Amendments to Various RFS2 Compliance Related Provisions
1. Proposed Changes to Definitions
2. Provisions for Small Blenders of Renewable Fuels
3. Proposed Changes to Section 80.1450—Registration Requirements
4. Proposed Changes to Section 80.1452—EPA Moderated Transaction System (EMTS) Requirements—Alternative Reporting Method for Sell and Buy Transactions for Assigned RINs
5. Proposed Changes to Section 80.1463—Confirm That Each Day an Invalid RIN Remains in the Market is a Separate Day of Violation
6. Proposed Changes to Section 80.1466—Require Foreign Ethanol Producers, Importers and Foreign Renewable Fuel Producers That Sell to Importers to be Subject to U.S. Jurisdiction and Post a Bond
7. Proposed Changes to Section 80.1466(h)—Calculation of Bond Amount for Foreign Renewable Fuel Producers, Foreign Ethanol Producers and Importers
8. Proposed Changes to Facility's Baseline Volume To Allow ''Nameplate Capacity'' for Facilities not Claiming Exemption From the 20% GHG Reduction Threshold
G. Minor Corrections to RFS2 Provisions
VI. Amendments to the E15 Misfueling Mitigation Rule
A. Proposed Changes to Section 80.1501—Label
B. Proposed Changes to Section 80.1502—E15 Survey
C. Proposed Changes to Section 80.1503—Product Transfer Documents
D. Proposed Changes to Section 80.1504—Prohibited Acts
E. Proposed Changes to Section 80.1500—Definitions
VII. Proposed Amendments to the ULSD Diesel Survey
VIII. Statutory and Executive Order Reviews

I. Why is EPA taking this action?

EPA is taking this action to amend various provisions in its regulations pertaining to fuels and fuel additives. First, EPA is proposing to amend 40 CFR part 80, subpart M related to the renewable fuels standard (RFS2). The RFS2 program was required by the Energy Independence and Security Act of 2007 (EISA 2007), which amended the Clean Air Act (CAA). The final regulations for RFS2 were published in the **Federal Register** on March 26, 2010 (75 FR 14670). In this notice, references to the ''RFS2 final rule'' refer to the March 26, 2010 **Federal Register** notice unless otherwise noted. Second, EPA is proposing to amend provisions of 40 CFR part 80, subpart N, related to misfueling mitigation for 15 volume percent (%) ethanol blends (E15). The final regulations for E15 were published in the **Federal Register** on July 25, 2011 (76 FR 44422). Several items in this proposed action will assist regulated parties in complying with RFS2 and E15 requirements. This action is not expected to result in significant changes in regulatory burdens or costs associated with the RFS2 and E15 programs. Third, EPA is proposing a change to the ultra low sulfur diesel (ULSD) program of 40 CFR part 80, subpart I. Specifically, EPA is proposing an amendment to the survey provisions that would likely result in decreasing the number of samples that must be taken, and as such would be expected to result in a decrease in regulatory burdens or costs.

II. Does this action apply to me?

Entities potentially affected by this action include those involved with the production, distribution and sale of transportation fuels, including gasoline and diesel fuel, or renewable fuels such as ethanol and biodiesel. Regulated categories and entities affected by this action include:

Category	NAICS Codes [a]	SIC Codes [b]	Examples of potentially regulated parties
Industry	324110	2911	Petroleum refiners, importers.
Industry	325193	2869	Ethyl alcohol manufacturers.
Industry	325199	2869	Other basic organic chemical manufacturers.
Industry	424690	5169	Chemical and allied products merchant wholesalers.
Industry	424710	5171	Petroleum bulk stations and terminals.
Industry	424720	5172	Petroleum and petroleum products merchant wholesalers.
Industry	454319	5989	Other fuel dealers.

[a] North American Industry Classification System (NAICS).
[b] Standard Industrial Classification (SIC) system code.

This table is not intended to be exhaustive, but rather provides a guide for readers regarding entities likely to be regulated by this action. This table lists the types of entities that EPA is now aware could be potentially regulated by this action. Other types of entities not listed in the table could also be regulated. To determine whether your entity is regulated by this action, you should carefully examine the applicability criteria of Part 80, subparts I, M and N of Title 40 of the Code of Federal Regulations. If you have any question regarding applicability of this action to a particular entity, consult the person in the preceding **FOR FURTHER INFORMATION CONTACT** section above.

III. What should I consider as I prepare my comments for EPA?

A. *Submitting CBI.* Do not submit this information to EPA through *www.regulations.gov* or email. Clearly mark the part or all of the information that you claim to be CBI. For CBI information in a disk or CD–ROM that you mail to EPA, mark the outside of the disk or CD–ROM as CBI and then identify electronically within the disk or CD–ROM the specific information that is claimed as CBI. In addition to one complete version of the comment that includes information claimed as CBI, a

copy of the comment that does not contain the information claimed as CBI must be submitted for inclusion in the public docket. Information so marked will not be disclosed except in accordance with procedures set forth in 40 CFR part 2.

B. *Tips for Preparing Your Comments.* When submitting comments, remember to:

- Identify the rulemaking by docket number and other identifying information (subject heading, **Federal Register** date and page number).
- Follow directions—The agency may ask you to respond to specific questions or organize comments by referencing a Code of Federal Regulations (CFR) part or section number.
- Explain why you agree or disagree; suggest alternatives and substitute language for your requested changes.
- Describe any assumptions and provide any technical information and/or data that you used.
- If you estimate potential costs or burdens, explain how you arrived at your estimate in sufficient detail to allow for it to be reproduced.
- Provide specific examples to illustrate your concerns, and suggest alternatives.
- Explain your views as clearly as possible, avoiding the use of profanity or personal threats.
- Make sure to submit your comments by the comment period deadline identified.

C. *Docket Copying Costs.* You may be charged a reasonable fee for photocopying docket materials, as provided in 40 CFR part 2.

IV. Executive Summary

EPA is proposing amendments to three sets of regulations. First, EPA is proposing to amend certain of the renewable fuels standard (RFS2) program regulations at 40 CFR part 80, Subpart M. Section V of this preamble includes several proposed amendments to the RFS2 regulations of 40 CFR part 80. The final regulations for RFS2 were published in the **Federal Register** on March 25, 2010 (75 FR 14670). EPA has issued technical corrections in the past. We have identified several additional changes. Some of the proposed changes in this notice are of a substantive nature; others are more in the nature of technical corrections, including corrections of obvious omissions and errors in citation. Among the more substantive modifications are various proposed changes related to biogas, including changes related to the revised compressed natural gas (CNG)/liquefied natural gas (LNG) pathway and amendments to various associated registration, recordkeeping, and reporting provisions. These fuels have the potential to add notable volumes of advanced biofuel including cellulosic biofuel to the existing renewable fuel volumes already being produced. Many of these changes are being proposed in order to facilitate the introduction of new renewable fuels under the RFS2 program and have come at the suggestion of industry stakeholders.

This preamble includes the addition of new pathways for renewable diesel, and renewable naphtha, and renewable electricity (used in electric vehicles) produced from landfill biogas. It includes a proposal to address ''nameplate capacity'' issues for certain production facilities that do not claim exemption from the 20% greenhouse gas (GHG) reduction threshold. EPA proposes to address issues related to crop residue and corn kernel fiber. We propose an approach for approving the cellulosic volumes from cellulosic feedstocks. We include a lifecycle analysis of advanced butanol and discuss the potential to allow for commingling of compliant products at the retail facility level as long as the environmental performance of the fuels would not be detrimental when compared to existing practices. We specifically discuss this consideration for commingling in regards to the volatility associated with butanol gasoline and ethanol gasoline blends.

We state when and how EPA may cancel a company registration. Of a more minor scope, this preamble includes proposed amendments that would define terminology used for registration and reporting purposes and propose changes to registration and reporting requirements. This preamble also discusses some minor corrections, including adding language to registration, recordkeeping and reporting sections requiring English language translation of documents. We have also proposed to correct obvious omissions and errors in citation in the existing RFS2 regulation.

Second, EPA is also proposing various changes to the E15 misfueling mitigation regulations (E15 MMR) at 40 CFR part 80, subpart N. The final E15 MMR was published in the **Federal Register** on July 25, 2011 (76 FR 44406). Among the E15 changes proposed are technical corrections and amendments to sections dealing with labeling, E15 surveys, product transfer documents, and prohibited acts. We also propose to amend the definitions in order to address a concern about the rounding of Reid Vapor Pressure (RVP) test results, in response to a question raised by some industry stakeholders.

Third, in response to questions received from regulated parties, we propose to amend the ultra low sulfur diesel (ULSD) survey provisions in a manner that will likely reduce the number of samples required. This may mean a reduction in costs and burdens associated with compliance for regulated parties, with no expected degradation in the highly successful environmental performance of the program.

V. Renewable Fuel Standard (RFS2) Program Amendments

The RFS2 program was required by the Energy Independence and Security Act of 2007 (EISA 2007), which amended the Clean Air Act (CAA). The final regulations for RFS2 were published in the **Federal Register** on March 26, 2010 (75 FR 14670). The rule took effect on July 1, 2010. In this notice, we are proposing several new renewable fuel pathway options for advanced biofuels including new cellulosic biofuel pathways. This proposed regulation would also provide modifications and technical amendments to the existing RFS2 program.

A. Approving Cellulosic Volumes From Cellulosic Feedstocks

Since the inception of the RFS program, EPA has qualified several fuel pathways that are able to generate cellulosic biofuel RINs (D codes 3 and 7). *See* 40 CFR 80.1426. Each of the qualified cellulosic feedstocks listed in section 80.1426 contain other components such as starches, sugars, lipids, and proteins. To date, EPA has not provided detailed information on how other components should be treated. This has led to uncertainty amongst renewable fuel producers about whether their entire volume of fuel produced from a cellulosic feedstock would be eligible to generate cellulosic RINs. In this rulemaking, EPA proposes to allow 100% of the volume of renewable fuel produced from certain specified, currently approved cellulosic feedstocks to generate cellulosic (D–3 or D–7) RINs. We also take comment on two alternative approaches for how to treat non-cellulosic components of cellulosic feedstocks.

For purposes of the RFS program, cellulosic biofuel is defined as ''renewable fuel derived from any cellulose, hemicellulose, or lignin that is derived from renewable biomass and that has lifecycle greenhouse gas emissions, as determined by the Administrator, that are at least 60 percent less than the baseline lifecycle greenhouse gas emissions.'' This

definition was added in Section 211(o)(1)(E) by the Energy Independence and Security Act (EISA) of 2007, where Congress specified four different categories of renewable fuel and their associated volume requirements. The threshold for reduction in greenhouse gases is set at a higher percentage for cellulosic biofuel than the reduction for the other categories of renewable fuels. While the volume requirements for cellulosic biofuel start at a relatively low volume, Congress specified large volume increases over time such that the main growth in the use of renewable fuels comes from cellulosic biofuels. This reflects a strong Congressional intention to promote the use of cellulosic biofuel and achieve the associated greenhouse gas emissions reductions.

However, no plant matter can ever consist entirely of cellulose, hemicellulose and lignin. Plants require proteins, DNA, carbohydrates and many other types of compounds in order to grow and function. Even feedstocks such as switchgrass, corn stover, and woody materials which are the most commonly cited ''cellulosic'' feedstocks, contain measurable proportions of other types of organic molecules. However, these ''cellulosic'' feedstocks contain much more cellulose, hemicellulose and lignin than do other types of biomass. As shown in Table V.A.–1, most ''cellulosic'' feedstocks consist of approximately 80–95% cellulose, hemicellulose, or lignin.[1] In contrast, corn kernels contain roughly 75% starch and less than 10% fiber (which includes the cellulosic components, as well as other materials),[2] and soybeans are roughly 60% oil and protein and only about 15% fiber.[3]

TABLE V.A.–1—AVERAGE CELLULOSIC COMPOSITION OF DIFFERENT TYPES OF FEEDSTOCKS[4]

Feedstock type	Average adjusted cellulosic composition (percent)
Crop Residue	90

TABLE V.A.–1—AVERAGE CELLULOSIC COMPOSITION OF DIFFERENT TYPES OF FEEDSTOCKS[4]—Continued

Feedstock type	Average adjusted cellulosic composition (percent)
Switchgrass	85
Miscanthus	85
Other Grasses	81
Wood and Branches	92

EPA is proposing to allow 100% of the volume of renewable fuel produced from specific cellulosic feedstock sources found in Table 1 of section 80.1426 to generate D–3 or D–7 RINs (depending on the type of finished fuel). However separated food waste, separated yard waste, and separated MSW would continue to be treated as before, as discussed below. There are three major justifications for this determination: (1) There can be significant variation in the amount of cellulosic content in any feedstock, which varies within a growing season, across samples, and across sites. Attempting to account for this variability would impose a significant administrative burden on producers and EPA; (2) The amount of the final fuel that is produced from the cellulosic portion of the feedstock is likely to be very high, particularly for fuels produced using a biochemical reaction; (3) EPA has already made previous determinations in which a single RIN value was assigned to the fuel produced since it came primarily from one source even though it was also produced from incidental amounts of other sources.

This determination is based on the view that the statutory requirement does not mandate that in all cases the renewable fuel must be produced solely from the cellulosic material in the renewable biomass. EPA considers the statutory definition of cellulosic biofuel to be flexible on this point. Given these factors cited above, the Agency believes this interpretation of ''derived from'' is consistent with the Congressional intent to require increased use of cellulosic biofuels while ensuring that the program can be implemented in a reasonable way. Details on the variability in feedstocks, characteristics of the final fuel, previous precedents, and alternative proposals are included in the following sections.

1. Variability in Cellulosic Content Estimates of Feedstocks

The cellulosic components of feedstock consist of the major structural components; cellulose; hemicellulose; and lignin. EPA has reviewed research characterizing the different components of feedstocks, mainly focused on how the materials could be broken down and converted into fuel. There has been work also in defining standardized procedures and test methods for analyzing the different components of biomass;[5] however, the studies considered all employ slightly different methods. For the purposes of this rule, EPA considered the amount of the feedstocks that is composed of cellulosic components i.e., how much comes from the cellulose, hemicellulose or lignin, as opposed to any other components of the feedstock. There is significant variation in the data reported on feedstock component compositions. The variation is due to a number of causes, such as measurement methods,[6] [7] variety within a generic feedstock type, and storage time.[8]

Although there are many factors that contribute to the large variability in assessments of cellulosic content, all studies confirm that the feedstocks in Table 1 of section 80.1426 have an adjusted cellulosic content of at least 70%, with an average content of around 85% cellulosic.[9] A memorandum to the docket provides more information on cellulosic terminology, percent composition of various feedstocks, and the variability of different feedstock components.[10] From this data, EPA concludes that each of the qualified feedstocks listed in section 80.1426 are comprised predominantly of cellulose, hemicellulose and lignin.

[1] *See* Memorandum to Docket, ''Cellulosic Content of Various Feedstocks,'' Docket EPA–HQ–OAR–2012–0401.

[2] Peplinski et al. (1992) Physical, chemical and dry-mill properties of corn of varying density and breakage susceptibility. *Cereal Chemistry,* 69(4), 397–400.

[3] Illinois Soybean Association. Facts and Statistics for the Illinois Soybean Industry. *http://www.ilsoy.org/_data/mediaCenter/files/1290.pdf.*

[4] Values have been adjusted to account for the presence of inorganic ash, which will not produce fuel, as described in the Memorandum to the Docket, ''Cellulosic Content of Various Feedstocks,'' Docket EPA–HQ–OAR–2012–0401.

[5] *See, e.g.,* the Standard Biomass Analytical Procedures developed by the National Renewable Energy Laboratory, *http://www.nrel.gov/biomass/analytical_procedures.html.*

[6] Compositional Analysis of Lignocellulosic Feedstocks. 2. Method Uncertainties, David W. Templeton, Christopher J. Scarlata, Justin B. Sluiter, And Edward J. Wolfrum, J. Agric. Food Chem. 2010, 58, 9054–9062

[7] Relative standard deviations (RSD) of 5–8% are reported for cellulose, hemicelluloses and lignin with the other minor components showing 16–22% RSD.

[8] Composition of Herbaceous Biomass Feedstocks, DoKyoung Lee, Vance N. Owens, Arvid Boe, Peter Jeranyama, Plant Science Department, South Dakota State University, SGINC1–07, June 2007.

[9] EPA only considered the organic components of the materials when determining cellulosic content. Inorganic materials are not likely to end up in the final fuel product and would not contribute to the fuel heating content in the event that they remained in the final fuel. This methodology is consistent with how RINs are determined. In this section, EPA refers to this as ''adjusted cellulosic.'' Adjusted cellulosic content does not consider other material that is not converted into biofuel such as minerals or other components that would show up as part of the ash remaining after a thermo-chemical conversion process.

[10] *See* Memorandum to Docket, ''Cellulosic Content of Various Feedstocks,'' Docket EPA–HQ–OAR–2012–0401.

2. Characteristics of the Amount of the Final Fuel Derived From Cellulosic Materials

Process technology plays a key role in how much of the final fuel product is actually produced from cellulose, hemicellulose, or lignin. There are two basic processes for converting cellulosic feedstocks into fuel: thermo-chemical and biochemical. Thermo-chemical processes mainly consist of pyrolysis—in which cellulosic biomass is decomposed with temperature to bio-oils and could be further processed to produce a finished fuel—and gasification—in which cellulosic biomass is decomposed to synthesis gas (''syngas'') with further catalytic processing to produce a finished fuel product. The biochemical process requires the release of sugars from biomass and the use of microorganisms to convert sugars into fuels. Thermo-chemical processes can accept a more heterogeneous mix of feedstock and typically convert all of the organic components of the feedstock into finished fuel. The biochemical process generally accepts a more homogeneous mix of feedstocks and typically converts only the cellulosic and hemicellulosic components of the feedstock into the final fuel product. Therefore, regardless of the feedstock used, the final fuel produced from the biochemical process will typically only come from the cellulosic or hemicellulosic portions of feedstock, while the final fuel produced from the thermo-chemical process could come from cellulosic and non-cellulosic components.

For thermo-chemical production in which the non-cellulosic components of the feedstock can contribute to the volume of fuel produced in addition to the cellulosic components, the percent of fuel produced from the non-cellulosic portion can vary due to such factors as feedstock type and the time and location of feedstock harvest. Regardless, we believe that the majority of the fuel produced will be from the cellulosic components. As a practical matter, there is no simple test that can be used to measure the amount of fuel end product that originated from cellulosic materials. For fuel produced via the biochemical process, 100% of the fuel produced is directly the result of conversion of the cellulosic content.

In selecting a cellulosic process, whether based on biochemical or thermo-chemical design, the fuel producer is clearly demonstrating that its primary intent is to convert the cellulosic portions of the feedstock. Cellulosic fuel producers invest in expensive process technologies with the intent of converting the cellulosic components of a feedstock into fuel; conversion of the non-cellulosic components can be achieved much more easily with less of a capital investment. Furthermore, since the fuel produced will be primarily the result of the direct conversion of cellulosic content of the feedstock and considering the relatively small range of non-cellulosic portion of feedstock that could contribute to the volume of fuel produced, EPA believes it is reasonable to consider all the fuel produced when relying on cellulosic conversion processes to be cellulosic biofuel.

3. Previous Precedents

EPA has already considered instances where one RIN value was assigned to the fuel produced since it came primarily from one source even though it was also produced from some amount of other chemical compounds. In the March 2010 RFS rulemaking, EPA discussed two different situations for fuel produced from separated yard waste and food waste as the renewable biomass feedstock. The first involved food waste or yard waste that was kept separate, from generation, from municipal solid waste (MSW). EPA determined that both of these feedstocks could be considered renewable biomass. With respect to separated yard waste, EPA determined that the yard waste was expected to be composed almost entirely of woody material or leaves, and this would be deemed to be cellulosic material and would generate cellulosic biofuel RINs. Separated food waste, however, was likely to be composed of both cellulosic and non-cellulosic materials, and in certain cases would likely be composed primarily of non-cellulosic materials, such as sugars and starches from the food. EPA determined that separated food waste would be deemed to be non-cellulosic material, and would generate advanced biofuel RINs and not cellulosic RINs, unless the renewable fuel producer demonstrated the part of the food waste that was cellulosic. This portion would then generate cellulosic RINs.[11]

The second situation EPA previously addressed involved separated MSW. EPA determined that separated MSW that met certain regulatory requirements would qualify as a renewable biomass for purposes of producing renewable fuel. EPA recognized that the biogenic portion of this feedstock would be composed of a ''variety of materials, including yard waste (largely cellulosic) and food waste (largely starches and sugar), as well as incidental materials remaining after reasonably practicable separation efforts such as plastic and rubber of fossil origin.'' Testing could identify the portion of the fuel produced from biogenic materials, and these biogenic materials ''will likely be largely derived from cellulosic materials (yard waste, textiles, paper, and construction materials), and to a much smaller extent starch-based materials (food wastes).'' However, EPA was not aware of a test method to distinguish between renewable fuel produced from the cellulose and fuel produced from the starch and under those circumstances determined that it was appropriate to base the assignment of RINs on the ''predominant'' component of the biogenic material. EPA thus determined that all of the fuel generated from the biogenic portion of separated MSW would be considered cellulosic biofuel.[12]

Thus, EPA has interpreted the definition of cellulosic biofuel as including in some cases a renewable fuel that is produced from both the cellulosic and incremental amounts of non-cellulosic components of the feedstock. EPA has treated the resulting fuel as all derived from cellulosic material where the feedstock is composed almost entirely of woody materials and leaves, or where the predominant component of the feedstock is likely cellulosic. The fuel will be largely derived from this cellulosic material and to a much smaller extent from non-cellulosic materials. There currently is no ready test to identify the portion of fuel produced from non-cellulosic materials. EPA has not considered the fuel as cellulosic in cases where the feedstock was likely to be largely non-cellulosic materials. In all of these cases, EPA has recognized that the fuel would be produced from both the cellulosic and non-cellulosic materials in the feedstock, and has determined in some cases to consider the fuel entirely cellulosic biofuel based on the relative amounts of the cellulosic and non-cellulosic materials and, for fuel made from the biogenic portion of separated MSW, on the lack of availability of a test procedure to differentiate how much of the fuel came from the cellulosic materials.

These determinations have been based on the view that the statutory requirement that cellulosic biofuel be ''derived from cellulose, hemicellulose, or lignin'' does not mandate that in all cases the renewable fuel must be produced solely from the cellulosic material in the renewable biomass. EPA

[11] 75 FR 14670, 14706 (March 26, 2010).

[12] 75 FR at 14706.

considers the statutory definition of cellulosic biofuel to be ambiguous on this point, providing EPA the discretion to reasonably determine under what circumstances a fuel appropriately could be considered cellulosic biofuel when the fuel is produced from a feedstock that is a mixture of cellulosic and non-cellulosic materials. To date, EPA has specified certain circumstances where the entire fuel will be considered cellulosic biofuel. EPA has taken this action in cases where the cellulosic material is almost entirely woody materials or leaves, or the fuel is produced from materials that are predominantly composed of cellulosic materials and to a much smaller extent non-cellulosic materials, with no current test to identify the differing portions. There have been two elements present in these decisions. One involves a determination that the feedstock is composed almost entirely or largely of cellulosic materials. EPA has also considered whether or not there is a test method to identify the actual portion of the fuel produced from cellulosic materials. In this rulemaking EPA is proposing an approach that is consistent with and an outgrowth of the approach taken in the RFS2 rulemaking. EPA is proposing to approve certain fuels as cellulosic biofuel where the cellulosic components account for a predominant percentage of the biogenic material in the renewable biomass feedstock used to produce the fuel, even where the non-cellulosic components of the renewable biomass could be reasonably identified or estimated.[13]

EPA is proposing to classify all of the biofuel as cellulosic in the fuel pathways proposed today, where the cellulosic material makes up a predominant percentage of the organic material from which the fuel is produced. This approach will avoid the administrative and technical burden on producers and EPA of trying to determine the specific amounts of cellulosic and non-cellulosic materials in the specified high-cellulosic feedstock sources, removing potential difficult and potentially time-consuming and expensive impediment to expansion of the cellulosic biofuel industry. The growth in cellulosic biofuel volumes promoted by today's proposal is expected to result in greater reductions in GHGs, as all of the biofuel qualified as cellulosic would have to achieve the minimum 60% reduction in GHG emissions specified in the Act.

[13] By predominant, EPA means the very high percentages for adjusted cellulosic content discussed in section V.A.1. above for the feedstocks at issue in this proposal.

EPA's application of this approach to the specific fuel pathways and feedstocks discussed in this proposal is intended to ensure that cellulosic materials are the predominant portion of the biogenic materials used to produce cellulosic biofuel. This approach avoids administrative, technical and cost burdens on EPA and industry and promotes the volume and greenhouse gas objectives of Congress. EPA proposes that this is a reasonable interpretation of the definition of cellulosic biofuels, and invites comment on this approach.[14]

EPA is proposing that biofuel made from the following cellulosic feedstocks will be able to generate applicable cellulosic RINs for 100% of the volume produced: crop residue; slash; pre-commercial thinnings and tree residue; annual cover crops; switchgrass; miscanthus; and energy cane. EPA's prior treatment of separated yard waste, separated food waste, and separated MSW is discussed above and is not being changed. On January 5, 2012, EPA proposed to qualify napier grass and Arundo donax as new feedstocks that would be eligible to generate cellulosic RINs. If those pathways are approved before this rule is final, EPA is proposing to apply the approach discussed above to these feedstocks as well.[15] To the extent that additional cellulosic pathways are approved in the future, we would expect to apply this same methodology to those feedstocks as well, but will evaluate them on a case-by-case basis.

EPA requests comments on this proposed approach to allow 100% of the volume of renewable fuel produced from the specified cellulosic feedstock sources found in Table 1 of section 80.1426 to generate cellulosic RINs. We also take comment on the cellulosic content values presented for different feedstocks. In addition, we request comments about any analytical methods that may exist to determine what percent of a finished biofuel product may have derived from cellulosic versus non-cellulosic components, and what the costs may be associated with these test methods. We also request comment on the alternative approaches outlined below.

[14] *See Bot* v. *IRS,* 353 F.3d 595 (8th Cir. 2003), *Wuebker* v. *IRS,* 205 F.2d 897 (6th Cir. 2000), *Milligan* v. *IRS,* 38 F.3d 1094 (9th Cir. 1994). *See also Hecla Mining Company* v. *US,* 909 F.2d 1371 (10th Cir. 1990) (DOE's interpretation of the term ''derived from'' in the Uranium Mill Tailings Radiation Control Act of 1978 accepted as a reasonable interpretation under *Chevron*).

[15] In addition, in section B of this proposal, EPA is also proposing to include corn fiber, CNG, LNG, electricity, and renewable diesel and naphtha from landfill biogas as cellulosic pathways for the reasons discussed therein.

4. Alternative Approaches

EPA seeks comment on two alternative approaches to assigning cellulosic RINs to fuels produced from the cellulosic feedstocks discussed above. Separate from the specific pathways addressed in this proposal, EPA also seeks comment on potential approaches for assigning cellulosic RINs for anticipated future pathways for renewable fuels produced from feedstocks that contain lower cellulosic content than those discussed in this rulemaking.

Cellulosic Content Threshold Approach

An alternative approach for handling the variability in cellulosic content would be for EPA to set a minimum threshold of cellulosic content in the feedstock. Fuels produced from feedstocks with a cellulosic content above this minimum threshold would be eligible to generate cellulosic RINs for 100% of their volume. Thresholds under consideration would range from 70% to 99.9%. A higher percentage would place more emphasis on the feedstock content having a higher actual cellulosic component, whereas the lower percentages would place more emphasis on promoting the volume of fuels that could be categorized as cellulosic biofuel. EPA invites comment on this approach, and also invites comment on the most appropriate value to use as the threshold. Furthermore, EPA invites comment on whether individual producers should be responsible for submitting data that their feedstock meets this threshold, or whether EPA should determine whether feedstocks meet this threshold based on existing published data.

Since biochemical processes generally only convert the cellulosic, hemicellulosic, or lignin components of the feedstock to fuel, EPA believes under this alternative approach, it may still be appropriate to allow fuel producers using biochemical processes to generate RINs for 100% of the fuel produced from cellulosic feedstocks. EPA requests comments on our assumption that biochemical processes will be specific for the cellulosic components, and we also request comment on whether to allow 100% of the fuel produced via biochemical processes to generate cellulosic RINs.

Specified Percentage Approach

As noted above, examining the range of feedstock data compiled by EPA, it appears that 85% would be a reasonable approximation for the average adjusted

cellulosic content across a range of assessments of the specific feedstocks that are qualified to produce cellulosic fuel. Under this approach, fuels produced from the cellulosic feedstocks discussed above would be eligible to generate cellulosic RINs for 85% of their volume, and the remaining 15% would be eligible to generate advanced RINs. The specified percentage approach would reduce administrative burden but also incentivize renewable fuel production. For this approach, EPA would effectively be treating 85% of the fuel produced from all of these feedstock sources as being derived from cellulosic material. However, EPA would consider allowing a larger percentage of the fuel to qualify for cellulosic RINs if the producer could submit data that demonstrates a consistently higher cellulosic content in their feedstock. Under this approach, producers could submit a written plan for approval under the registration procedures in 40 CFR 80.1416(b)(vii). The plan would need to detail the cellulosic content of the feedstock, the method used for quantifying the cellulosic and non-cellulosic contents, and the production process used.

Since biochemical processes generally only convert the cellulose, hemicellulose, or lignin components of the feedstock to fuel, EPA believes under this alternative approach it would be appropriate to allow fuel producers using biochemical processes to generate RINs for 100% of the fuel produced from cellulosic feedstocks. EPA requests comments on our assumption that biochemical processes will be specific for the cellulosic components, and we also request comment on whether to allow 100% of the fuel produced via biochemical processes to generate cellulosic RINs.

Request for Comment on Potential Approaches for Fuels Produced From Feedstocks With Lower Cellulosic Content

Finally, EPA anticipates that in the future, we may address biofuels that are produced from feedstocks that contain lower cellulosic content than those discussed in this rulemaking. Accordingly, we request comment on how EPA should assign RINs to the fuels produced from feedstocks with lower cellulosic content than those presented in this rulemaking but for which some of the fuel is produced from the cellulosic components. One possible example would be a feedstock that contained in the range of 40–60% cellulose, hemicellulose and lignin, where the fuel was produced using thermochemical methods such that the same percentage of the fuel may come from cellulosic materials. EPA invites comments about what approaches could be taken for assigning cellulosic RINs to the biofuel. For example, would one or more of the approaches outlined above be appropriate for assigning RINs to this fuel? Are there variations on these approaches that EPA should consider? EPA also invites comments on how to assign cellulosic RINs where processes other than thermochemical methods are used.

B. Lifecycle Greenhouse Gas Emissions Analysis for Renewable Electricity, Renewable Diesel and Naphtha Produced from Landfill Biogas

EPA has received several facility-specific petitions under § 80.1416 to allow renewable electricity, renewable diesel and naphtha produced from landfill biogas to qualify as renewable fuels under the RFS program. Since these new pathways could be more broadly applicable, EPA is proposing to add these pathways to Table 1 to § 80.1426 through this rulemaking process. Based on questions from companies, EPA is also modifying the existing biogas pathway to specify that compressed natural gas (CNG) or liquefied natural gas (LNG) is the fuel and biogas is the feedstock. For this proposal, EPA considered both the cellulosic origin of landfill biogas and the lifecycle GHG impacts of three types of fuel produced from landfill-derived biogas. In the final RFS2 rule, EPA established biogas as a fuel type when derived from landfills, sewage waste treatment plants, and manure digesters. This biogas was classified as an advanced biofuel eligible to generate D-Code 5 RINs. EPA also established cellulosic diesel and cellulosic naphtha as cellulosic biofuels eligible to generate D-Code 7 and 3 RINs, respectively. The eligible feedstocks for these biofuels include cellulosic components of separated municipal solid waste but did not include biogas from landfills.

Based in part on additional information received through the petition process for EPA approval of renewable electricity and renewable diesel and naphtha produced from landfill biogas, EPA has evaluated these pathways and is proposing to include renewable electricity produced from landfill biogas feedstock in Table 1 to § 80.1426 as a cellulosic fuel type. It is important to note that RINs may only be generated for electricity from biogas that can be tracked to use in the transportation sector, such as by an electric vehicle. We are also proposing to add renewable diesel produced from landfill biogas via the Fischer-Tropsch process as an approved advanced and/or biomass-based diesel biofuel and naphtha produced from landfill biogas via the Fischer-Tropsch process as an approved advanced biofuel. If the Fischer-Tropsch facilities produce at least 20% of their electricity demand at the facility from certain allowed sources, we are proposing that the renewable diesel and naphtha produced would further qualify as cellulosic biofuels. We are also proposing to amend the existing biogas pathway to list renewable CNG/LNG as the fuel types instead of biogas since the biogas is converted into CNG or LNG before being used as a transportation fuel, as discussed below. Renewable CNG/LNG produced from biogas from waste treatment plants and waste digesters is still classified as an advanced biofuel. However, renewable CNG/LNG produced from biogas from landfills now qualifies as a cellulosic pathway. The changes to the renewable CNG/LNG pathway are described in section C.1. ''Changes Applicable to the Revised CNG/LNG pathway from Biogas'' below.

1. Feedstock Production

When waste materials are buried in a landfill, decomposition of the organic materials consumes all of the oxygen present within roughly one year, leaving the bulk of the material to undergo slower, anaerobic decomposition. This process produces large amounts of methane for several decades, as well as other products, with the gases released as ''biogas.'' Biogas from landfills typically contains approximately 50% methane and 50% carbon dioxide, with small or trace amounts of other gases. Methane is a potent greenhouse gas (GHG), with a global warming potential of 21 times that of carbon dioxide, and landfills are the third-largest anthropogenic source of methane to the atmosphere in the United States.[16]

The methane present in biogas is also a potential energy source that may be purified and compressed to be used directly in CNG or LNG vehicles, combusted to produce electricity or converted to renewable diesel and naphtha via the Fischer-Tropsch process. The March 2010 RFS final rule concluded that municipal solid waste has no agricultural or land use change GHG emissions associated with its production. Furthermore, the feedstock for these fuels is landfill biogas, which already appears in Table 1 of

[16] U.S. Environmental Protection Agency. 2013. Inventory of U.S. Greenhouse Gas Emissions and Sinks: 1990–2011, Chapter 8: Waste. EPA 430–R–13– 001, *available at http://www.epa.gov/climatechange/Downloads/ghgemissions/US-GHG-Inventory-2013-Main-Text.pdf.*

§ 80.1426(f) of the RFS2 regulations and has already been evaluated as part of the RFS2 final rule lifecycle GHG determinations. Therefore no new renewable feedstock production modeling was required, no GHG emissions were attributed to feedstock production for any of these renewable fuel pathways, and EPA focused our analysis on the new fuel production processes.

2. Determination of the Cellulosic Composition of Landfill Biogas

In order for fuels produced from landfill biogas as a feedstock to qualify to generate D-Code 3 or 7 (cellulosic) RINs, the renewable fuel must be derived from cellulosic materials and must meet a 60% GHG emissions reduction threshold, as described in the following sections. In this section, we discuss our determination that biogas derived from landfills is derived from cellulose, hemicellulose or lignin.

CAA 211(o) specifies ''separated yard waste or food waste'' as a type of renewable biomass, and in the March 2010 RFS final rule, EPA stated:

> As a result of the intermixing of wastes, the fact that biogas is formed only from the biogenic portion of landfill material, and the fact that landfill material is as a practical matter inaccessible for further separation, EPA believes that no further practical separation is possible for landfill material and biogas should be considered as produced from separated yard and food waste for purposes of EISA.

The March 2010 RFS final rule stated that all landfill-derived biogas was therefore eligible to generate RINs.

An in-depth study of methane production from different chemical components of municipal solid waste found that roughly 90% of the methane generated in landfills derived was from cellulose and hemicellulose.[17] Accordingly, EPA is proposing to classify renewable fuels produced from landfill biogas as derived from cellulose, hemicellulose or lignin. This determination is discussed in more detail in a memo to the docket.[18] Consistent with the discussion in the section above, ''Approving Cellulosic Volumes from Cellulosic Feedstock,'' we are classifying all of the biofuel volume produced from landfill biogas as cellulosic in origin. Therefore the entire volume of renewable fuels using landfill biogas as a feedstock will be eligible to generate cellulosic RINs (D-Codes 3 and 7) if the fuel also meets the required 60% GHG emissions reductions. EPA invites comment and data on the cellulosic component of biogas.

3. Fuel Production—General Considerations

Landfills currently treat their methane in one of several ways. Municipal solid waste (MSW) landfills designed to collect at least 2.5 million megagrams (Mg) and 2.5 million cubic meters of waste and emitting at least 50 Mg of non-methane organic compounds per year are required by EPA regulations to capture and control their biogas.[19] These large, regulated landfills represent a small percentage of all landfills by number but are responsible for the majority of biogas emissions from landfills. To comply with the regulations, these landfills must at a minimum combust their biogas in a flare, converting the methane to carbon dioxide, a less potent GHG. They may also use it to generate electricity from combustion of the methane, in which case, the electricity produced may displace electricity from other sources (such as gas-fired power plants) once it enters the grid. If displacing other sources of electricity that on average have greater GHG emissions, landfills that generate electricity may reduce GHG emissions and are using the ''best practices'' in the industry.[20] Many smaller, unregulated landfills do not collect their biogas, and this methane is ''vented'' to the atmosphere. In 2010, 29% of the methane generated at landfills was flared and 29% of the methane was used to generate electricity.[21] Accounting for the 25% average collection efficiency of biogas collection systems,[22] we estimate that approximately 38% of the methane generated is derived from landfills that flare their gas and another 38% is derived from landfills with gas-to-electricity projects. By mass balance, this suggests that 24% of the landfill methane generated is from landfills that vent their methane.

In our lifecycle GHG analysis of these biofuels we need to consider what would have happened to the landfill gas if it was not used to produce transportation fuels. This is the baseline for comparison to calculate the GHG impacts of the fuels in question. Once we have chosen a baseline for comparison, we propose to treat biogas from all landfills the same regardless of how the biogas is processed at that landfill. This approach is consistent with how we have treated the implementation of advanced technologies for all biofuels producers.

For the landfill gas-to-electricity pathway we use landfills that flare their biogas as the baseline GHG emissions with which we compare scenarios involving production of electricity from the landfill biogas. We chose this baseline because these landfills are the ones most likely to convert to gas-to-energy projects, since they already have gas collections systems in place. They are also the ones most likely to be the alternative to gas to energy projects since these projects will likely go into larger landfills that are required by regulation to collect and treat the biogas. We expect that small, unregulated landfills would be unlikely to generate enough biogas to justify collecting it for conversion to renewable fuels. Furthermore, we expect that the capital costs for such small landfills would preclude them from making such changes. However, if such small landfills were to capture and use their biogas in transportation fuels, this would result in significantly greater reductions in GHG emissions at each landfill than assumed for landfills already capturing biogas because of the decrease in methane release, so that biofuels produced from such facilities would easily meet the required emissions reduction thresholds. Since landfills that currently have gas-to-energy projects in place at one point either replaced flaring with a gas-to-energy project or installed a gas-to-energy project as an alternative to the minimal compliance route of flaring, we are proposing to treat the emissions from these landfills compared to the same flaring baseline. We show lifecycle results calculated using alternative baselines and discuss our choice of baseline in more depth in a memo to the

[17] Barlaz, M.A., R.K. Ham, and D.M. Schaefer. 1989. Mass-balance analysis of anaerobically decomposed refuse. Journal of Environmental Engineering, 15(6) 1088–1102.

[18] ''Support for Cellulosic Determination for Landfill Biogas and Summary of Lifecycle Analysis Assumptions and Calculations for Biofuels Produced from Landfill Biogas,'' which has been placed in docket EPA–HQ–2012–0401.

[19] Standards of Performance for New Stationary Sources and Guidelines for Control of Existing Sources: Municipal Solid Waste Landfills, 61 FR 9905, 9944 (March 12, 1996).

[20] Some facilities also use the biogas directly in boilers and other applications or purify the biogas to create CNG or LNG or inject it directly into natural gas pipelines.

[21] Environmental Protection Agency. 2012. Inventory of U.S. Greenhouse Gas Emissions and Sinks: 1990–2010, Annex 3: Methodological Descriptions for Additional Source or Sink Categories. *http://epa.gov/climatechange/emissions/usinventoryreport.html.* As of December 2012, landfills produced 1913 MW of electricity based on figures from LMOP. This electricity would be almost entirely sold for use on the grid. From *http://www.epa.gov/lmop/projects-candidates/index.html.*

[22] Environmental Protection Agency, Landfill Methane Outreach Program. 2010. LFG Energy Project Development Handbook: Chapter 2. Landfill Gas Modeling. *http://epa.gov/lmop/publications-tools/handbook.html.*

docket.[23] We invite comment on our baseline assumptions for the electricity pathway. If commenters believe a different baseline is appropriate, EPA specifically invites the submission of data supporting this alternative baseline.

For gas to liquids projects we also use landfills that flare their biogas as the baseline GHG emissions with which we compare scenarios involving production of gas to liquids, for the same reasons outlined above. We further consider that landfills that have already invested the capital to generate electricity are unlikely to stop doing so in order to generate liquid fuels from the biogas, which would require considerable additional capital investments. These facilities are therefore an unlikely baseline for the pathways generating renewable diesel and naphtha. We invite comment on our baseline assumptions for the liquids pathway and whether a different baseline would be more appropriate. If commenters believe a different baseline is appropriate, EPA specifically invites the submission of data supporting this alternative baseline.

4. Fuel Production for Renewable Electricity

Landfills can generate electricity by combustion of the methane in their biogas. Generating electricity at landfills requires collection of the biogas (using wells, piping and blowers), purification and compression of the biogas and electricity generation. Most landfills use internal combustion engines to generate the electricity, but a significant proportion also use gas or steam turbines or combined cycle systems. Once generated, the electricity enters the electrical grid.

In determining the lifecycle GHG analysis of renewable electricity, we examined two main factors. The first involved determining by how much emissions at the landfill (from flaring) would change upon installation of a gas-to-energy project. For this calculation, we used emission factors from the GREET model.[24] The second involved calculation of the decrease in GHG emissions caused by powering the gas blowers already in use with biogas-derived electricity rather than grid electricity upon installation of a gas-to-energy project. This calculation used data from the EPA Landfill Methane Outreach Project (LMOP).[25] For each factor, we needed to first calculate how much electricity could be generated and delivered to the consumer. We used values from LMOP as estimates of the relative shares of different types of engines or turbines, the electricity generation efficiency, parasitic losses, energy use in collecting and preparing the biogas, and a value from the U.S. Energy Information Agency to estimate distribution losses. Values used are shown in Table V.B.–1, and the assumptions and calculations are discussed in more detail in a memo to the docket.[26]

TABLE V.B.–1—CALCULATION OF THE NET AMOUNT OF ELECTRICITY DELIVERED TO THE CONSUMER PRODUCED FROM A GIVEN AMOUNT OF LANDFILL BIOGAS[27]

	Value	Units
Electricity generation efficiency	11700	Btu/kWh.
Gross electricity production	0.292	mmBtu/mmBtu biogas.
Electricity produced after parasitic losses	0.267	mmBtu/mmBtu biogas.
Energy used for blowers	0.014	mmBtu/mmBtu biogas.
Distribution losses	0.017	mmBtu/mmBtu biogas.
Net electricity delivered to consumer	0.236	mmBtu/mmBtu biogas.

We used the value for the net city yield from biogas to calculate how GHG emissions from the landfill itself would change upon conversion from flaring to a gas-to-energy project. We first calculated emissions per mmBtu electricity (Table V.B.–2). However, the drivetrains of electric vehicles are roughly three times as efficient as those of conventional gasoline-powered vehicles, meaning that any given EV would be able to travel about three times as far per Btu of input. To account for this difference, we also calculated emissions per mmBtu fuel equivalent. It would take roughly three times the amount of energy from liquid fuel to drive a conventional vehicle a given distance compared to an EV powered by electricity, so the emissions per mmBtu fuel equivalent are approximately one third as large as the emissions per mmBtu electricity. EPA invites comments on the assumptions regarding electricity equivalence.[28]

[23] ''Support for Cellulosic Determination for Landfill Biogas and Summary of Lifecycle Analysis Assumptions and Calculations for Biofuels Produced from Landfill Biogas,'' which has been placed in docket EPA–HQ–2012–0401.

[24] Argonne National Laboratory (2011) Greenhouse Gases, Regulated Emissions, and Energy Use in Transportation Model (GREET), Version 1 2011, *http://greet.es.anl.gov/*.

[25] EPA LMOP Data.

[26] ''Support for Cellulosic Determination for Landfill Biogas and Summary of Lifecycle Analysis Assumptions and Calculations for Biofuels Produced from Landfill Biogas,'' which has been placed in docket EPA–HQ–2012–0401.

[27] All values are derived from information provided by the EPA Landfill Methane Outreach Program except the distribution loss number, which is from the U.S. Energy Information Agency. Parasitic losses were calculated by apportioning the gross electricity generation to different types of generators and using parasitic loss values for that particular type of generator.

[28] Note that in order to determine the number of RINs generated from a given amount of renewable electricity, section 80.1415(b)(6) of the regulations states that 22.6 kW-hr of electricity shall represent one gallon of renewable fuel with an equivalence value of 1.0.

TABLE V.B.–2—FUEL GHG EMISSIONS FOR THE RENEWABLE ELECTRICITY PATHWAY, CALCULATED PER MMBTU ELECTRICITY AND PER MMBTU FUEL EQUIVALENT COMPARED TO THE 2005 GASOLINE BASELINE

Lifecycle stage	GHG emissions			
	Renewable electricity		2005 Gasoline baseline	U.S. Average grid electricity
	kg CO_2-eq/mmBtu electricity	kg CO_2-eq/mmBtu fuel equivalent	kg CO_2-eq/mmBtu fuel	kg CO_2-eq/mmBtu electricity
On-site emissions	25	8	.....	.....
Upstream (electricity production for blowers)	−13	−4	.....	.....
Total Emissions:	12	4	98	220
% Change from Gasoline Baseline	−87%	−96%	.....	.....
% Change from Grid Electricity	−94%	N/A	.....	.....

On-site emissions of facilities that generate electricity would be slightly higher than emissions from facilities that flare because reciprocating engines, which are the dominant technology used to generate electricity from biogas, are less efficient at destroying methane than flares. Facilities that originally flared their biogas are assumed to have been purchasing electricity from the grid to power the blowers needed to collect the biogas. Upon conversion to gas-to-energy projects, the facilities would now generate that electricity themselves and thus no longer need to purchase this electricity from the grid. The calculations above include a credit in GHG emissions for the avoided purchase of grid electricity (Table V.B.–2). Unlike traditional transportation fuels, there are no GHG emissions involved in transportation or distribution of renewable electricity (distribution losses are accounted for above), nor are there any tailpipe emissions from the direct use of the fuel. Therefore, the only emissions considered are those from production of the fuel, as outlined in Table V.B.–2. The total GHG emissions for conversion from flaring to a gas-to-energy project are 12 kg CO_2-eq/mmBtu electricity, or 4 kg CO_2-eq/mmBtu fuel equivalent. Compared with the gasoline baseline GHG emissions of 98 kg CO_2-eq/mmBtu, these projects would be accompanied by an 87% reduction in GHG emissions when normalized per mmBtu electricity. Accounting for the improved efficiency of EV drivetrains increases the GHG emissions reductions to 96%. Renewable electricity therefore meets the statutory baseline of 60% reductions in GHG emissions relative to the gasoline baseline and qualifies as a cellulosic biofuel. EPA invites comments on the assumptions and calculations of GHG emissions related to renewable electricity from landfill gas.

5. Fuel Production, Transport and Tailpipe Emissions for Renewable Diesel and Naphtha

Renewable diesel and naphtha can be made from landfill biogas by a combination of methane reforming and the Fischer-Tropsch gas-to-liquids (GTL) process. For methane reforming, the biogas must first be purified and then be reformed to create synthesis gas, known as ''syngas,'' which is composed of a mixture of carbon monoxide and hydrogen gas. This process may occur via either steam methane reforming or autothermal reforming. The syngas is next purified and then sent to a Fischer-Tropsch (F–T) system in which the carbon monoxide and hydrogen are combined in the presence of a catalyst to form a range of hydrocarbons. This reaction produces relatively short-chain (naphtha), medium-length (diesel) and long-chain (wax) hydrocarbons. The wax can subsequently be upgraded by hydroprocessing to form naphtha and diesel fuels. The different products are then separated by simple distillation. Heat generated by the reaction can be used to preheat gases in the system and to generate electricity for use in the system or for export. Unconverted syngas from the F–T process and fuel gas from hydroprocessing can also be combusted to generate electricity. GTL plants may have substantially different lifecycle GHG impacts depending on whether they upgrade their waxes and whether they generate electricity as a side product of the reaction. Electricity generation can add to the capital costs of a facility but also greatly reduces the lifecycle GHG emissions of a plant.

In determining the lifecycle GHG impacts of GTL fuels, we considered two main factors: on-site emissions at the landfill and upstream emissions from electricity production to power the plant. Additionally, a facility that produced wax was assigned a co-product credit for the wax generated. We did the calculations assuming the facility did not generate any electricity and then calculated what fraction of their electricity demands they would need to generate internally to meet the 60% emissions reduction threshold to qualify for cellulosic RINs.

To determine the lifecycle GHG emissions, we used confidential business information (CBI) data provided in a petition submitted to EPA. This process did not involve upgrading of wax to liquid fuels. For this scenario, we used the supplied information about inputs of biogas, outputs of fuel and co-product and electrical demand for the lifecycle analysis. We first determined how many GHG emissions would be avoided on-site at the landfill by changing from the baseline scenario of flaring to collecting the biogas for conversion to liquid fuels. This calculation was similar to that described above for renewable electricity and relied on values from GREET [29] for the emissions factor for flaring. To calculate the emissions from electricity required by the process, we used the emissions factors for average U.S. electrical production used in the RFS2 final rule.

To assign a co-product credit to the fuels, we assumed that the wax produced during the Fischer-Tropsch process would enter a market in which it would displace wax derived from petroleum. To determine the effects of such a displacement on GHG emissions, we used data from a model by the Department of Energy's National Energy Technology Laboratory (NETL) [30] for the yields and GHG emissions attributable to wax production from petroleum

[29] Argonne National Laboratory, ''Greenhouse Gases, Regulated Emissions, and Energy Use in Transportation Model (GREET),'' Version 1 2011, *http://greet.es.anl.gov/*.

[30] Department of Energy: National Energy Technology Laboratory. (2009) NETL: Petroleum-Based Fuels Life Cycle Greenhouse Gas Analysis—2005 Baseline Model. *www.netl.doe.gov/energy-analyses.*

feedstock. These values only include production emissions and do not include any emissions from combustion of the wax in, for example, candles because we do not have information about what fraction of wax is combusted. If combustion emissions were included, the co-product credit would be even larger. The global wax market is growing, with demand expected to outpace supply in the next few years.[31] As such, it is unlikely that F–T waxes would in reality displace petroleum-derived waxes. Instead, waxes from both sources are likely to be used in parallel to fulfill demand, and such waxes would replace any substitutes that might be used to fill the gap between supply and demand. The nature of these alternatives is presently unknown to EPA, as are their lifecycle GHG emissions. As an alternative to assigning a displacement credit, we could allocate emissions to the waxes along with the renewable diesel and naphtha products. In this case, the co-product credit disappears but total fuel production emissions decrease to 30 kg CO_2-eq/mm Btu, leading to overall GHG emissions reductions of 68%. Our use of the displacement approach is conservative compared to the allocation approach, which would have resulted in a larger credit for the wax co-product. We welcome comment regarding what kinds of materials these new waxes might replace, as well as how to best account for them in our lifecycle GHG analysis.

The results of this analysis are shown on the ''Fuel Production'' line of Table V.B.–3, and the assumptions and calculations are discussed in more detail in a memo to the docket.[32] Emissions from electricity production used to power the F–T plant is the greatest contributor to the overall fuel production emissions. In addition to emissions from fuel production, there were minor GHG emissions attributable to fuel transport and tailpipe emissions of non-CO_2 GHGs (Table V.B.–3). Overall, renewable diesel and naphtha produced from landfill biogas via this process showed 52% and 51% reductions in GHG emissions, respectively, relative to the diesel or gasoline baseline (Table V.B.–3). These fuels would therefore qualify as advanced biofuels but not qualify as cellulosic biofuels. However, if the facility produced roughly 15% of its process electricity internally, using either waste heat from the reaction or combustion of unreacted chemicals, emissions from purchased electricity would drop enough to reach the 60% GHG reduction threshold, qualifying these fuels as cellulosic. Because emissions from production of these biofuels (without internal production of electricity) fall so close to the 50% threshold to qualify as advanced biofuels, the assumptions used to make the calculations are especially important and could potentially change the classification of these fuels. Accordingly, we request comments about the assumptions and values used in the calculations, which are detailed in a memo to the docket.[33] In particular, we request comment about the estimate for the on-site GHG emissions at the Fischer-Tropsch facility. Data regarding fugitive emissions from Fischer-Tropsch facilities using methane as a feedstock appear to be limited, however, the GREET model assumed a loss factor of 1.0000 for the production of F–T diesel, indicating their estimate that no methane is lost during this process. Several studies mentioned emissions from the steam methane reforming of natural gas to produce hydrogen, and we assumed emissions would be similar from a Fischer-Tropsch facility using steam methane reforming. Two of these studies [34] [35] found or estimated that losses of methane from such facilities were negligible, agreeing with the GREET estimate. Accordingly, we assumed no emissions of methane from F–T facilities. However, another study [36] estimated losses of 0.125% of the natural gas processed. Using this last value, the GHG emissions reductions for renewable diesel and naphtha would decrease to 49% for both fuels, meaning that the biofuels would no longer qualify as advanced fuels. We request comments and information about our estimates of fugitive emissions from Fischer-Tropsch facilities.

TABLE V.B.–3—TOTAL GHG EMISSIONS FOR RENEWABLE DIESEL AND NAPHTHA PRODUCED FROM LANDFILL BIOGAS AND COMPARED TO THE APPROPRIATE PETROLEUM BASELINE

Lifecycle stage	GHG emissions (kg CO_2-eq/mmBtu)			
	Biofuels		Petroleum baselines	
	Renewable diesel	Naphtha	2005 diesel baseline	2005 gasoline baseline
Fuel Production	44	44	18	19
Fuel Transport	1	2	*	*
Tailpipe Emissions	1	2	79	79
Total Emissions	47	48	97	98
% Change from Petroleum Baseline	−52%	−51%	.....	.....

* Emissions included in fuel production stage.

For this lifecycle analysis, we have only examined a facility that does not upgrade its wax and therefore produces wax as a co-product. It is likely that other facilities may produce F–T renewable diesel and naphtha by a

[31] Kline Group (2011) Global Wax Industry 2010: Market Analysis and Opportunities. *http://www.klinegroup.com/reports/brochures/y635a/brochure.pdf.*

[32] ''Support for Cellulosic Determination for Landfill Biogas and Summary of Lifecycle Analysis Assumptions and Calculations for Biofuels Produced from Landfill Biogas,'' which has been placed in docket EPA–HQ–2012–0401.

[33] ''Support for Cellulosic Determination for Landfill Biogas and Summary of Lifecycle Analysis Assumptions and Calculations for Biofuels Produced from Landfill Biogas,'' which has been placed in docket EPA–HQ–2012–0401.

[34] Skone, T.J. and Gerdes, K. (2008) NETL: Development of Baseline Data and Analysis of Life Cycle Greenhouse Gas Emissions of Petroleum-Based Fuels. *http://www.netl.doe.gov/energy-analyses/pubs/NETL%20LCA%20Petroleum-Based%20Fuels%20Nov%202008.pdf.*

[35] Spath, P.M. and Mann, M.K. (2001) Lifecycle Assessment of Hydrogen Production via Natural Gas Steam Reforming. NREL Technical Report NREL/TP–570–27637, *http://www.nrel.gov/docs/fy01osti/27637.pdf.*

[36] Contadini, J.F., Diniz, C.V., Sperling, D., and Moore, R.M. (2000) Hydrogen production plants: emissions and thermal efficiency analysis. *ITS-Davis. Presented at the Second International Symposium on Technological and Environmental Topics in Transports,* October 26–27, 2000. Milan, Italy. Publication No. UCD–ITS–RR–00–16.

process that does involve upgrading waxes to increase the yield of the liquid fuels. Accordingly, we used assessments from other analyses of theoretical F–T [37] or steam methane reforming [38] plants using wax upgrading to estimate the lifecycle GHG emissions from such products. Based on this analysis (not shown), these facilities should theoretically have GHG emissions that are as low as or lower than those calculated above. For this reason, we believe that the lifecycle analysis shown above is a reasonable, if slightly conservative,[39] representation of expected landfill biogas-to-liquids projects. We accordingly classify all renewable diesel and naphtha produced via the F–T process from landfill biogas as advanced biofuel.

The lifecycle analysis for these fuels considered that the renewable diesel product produced from the Fischer-Tropsch process would be used as conventional diesel fuel. EPA does not have sufficient information to evaluate the lifecycle greenhouse gas emissions for jet fuel or heating oil produced from landfill biogas using the Fischer-Tropsch process. Because the lifecycle analysis results for this process fell so close to the threshold for advanced biofuels, in this pathway, we are proposing to only allow renewable diesel for use as conventional diesel fuel to qualify under the RFS program. We invite comments and supporting data about whether we should also allow jet fuel and heating oil produced from landfill biogas to qualify.

Our lifecycle analysis showed that if the evaluated facility meets approximately 15% of its electricity demand with internally produced electricity from eligible sources, it will meet the 60% threshold to qualify as cellulosic. Because other facilities are likely to be somewhat different, and because this analysis relies on a number of assumptions, we are using a slightly more conservative threshold of 20% of electrical generation. Accordingly, we are proposing that if a biogas-to-liquids facility produces at least 20 percent of its process electricity internally as discussed above, these biofuels will qualify as cellulosic. These requirements are discussed in greater length in Section C.4. ''*Changes Applicable to Process Electricity Production Requirement for the Biogas-Derived Cellulosic Diesel and Naphtha Pathways'' below.* Facilities that can supply data that demonstrate they meet the 60% GHG emissions reduction threshold without production of 20% electricity are welcome to petition the EPA individually under section 80.1416.

EPA invites comment and data on the GHG emissions associated with landfill biogas renewable fuel pathways. We also welcome comment on the methodology and assumptions underlying this analysis. We do not at this point have sufficient information to evaluate the lifecycle greenhouse gas emissions for production of renewable electricity or renewable diesel and naphtha from biogas from waste treatment plants or waste digesters. Accordingly, we invite comments providing information about these potential pathways.

C. Proposed Regulatory Amendments Related to Biogas

1. Changes Applicable to the Revised CNG/LNG Pathway From Biogas

In the existing RFS2 regulations, an approved fuel pathway in Table 1 to section 80.1426(f)(1) allows biogas from landfill gas, manure digesters or sewage treatment plants to qualify as an advanced biofuel and generate a D code of 5 for the biofuel produced under the RFS2 program. Since the promulgation of the final rule, we have received many requests about what fuel qualifies under this pathway, including: (1) The renewable fuel type that is qualified under the term ''biogas,'' (2) what are the eligible sources of biogas, (3) what company along the production chain of biogas from generation to end user is considered the producer that qualifies to register under this pathway and generate RINs, and (4) what are the contract requirements to track the biogas from generation to end use.

In response, EPA is proposing in this rulemaking to amend the existing biogas pathway in Table 1 to section 80.1426(f) by changing the renewable fuel type in the pathway from ''biogas'' to ''renewable compressed natural gas (renewable CNG) and renewable liquefied natural gas (renewable LNG)'' and to replace the feedstock type of ''landfills, manure digesters or sewage waste treatment plants'' with ''biogas from landfills, waste treatment plants or waste digesters.'' We are also proposing to revise the definition of biogas and add definitions for CNG and LNG to section 1401 to provide additional clarity. In addition, we are proposing to revise and add new contracting, registration, reporting and recordkeeping requirements along the production chain. Furthermore, we are specifying which company along the production chain is considered the ''producer'' and eligible to generate RINs under the RFS2 program. These proposed compliance requirements are applicable to this revised CNG/LNG pathway, and all the newly proposed pathways for renewable fuels produced from landfill gas in this rulemaking. The details of the proposed new requirements for contract, registration, reporting and recordkeeping are discussed below in the section titled ''Changes Applicable to All Biogas-Related Pathways for RIN Generation.''

The existing biogas pathway in Table 1 to section 80.1426(f) refers to ''biogas'' as the renewable fuel type and ''landfills, manure digesters and sewage waste treatment plants'' as the feedstock. Companies have raised questions whether the term ''biogas'' in this pathway could refer to the unprocessed or raw gas from the landfills, manure digesters or sewage treatment plants, or processed ''biogas'' that has been upgraded and could be used directly for transportation fuel or as an ingredient in the production of transportation fuel or as an energy source used in the production of transportation fuel, or other fuel types that can be produced from the raw biogas either through a physical or chemical process (such as CNG, LNG, renewable electricity, renewable diesel or naphtha). The companies further inquire if the various forms of biogas discussed above could qualify under this pathway, and therefore be eligible for RIN generation under the RFS2 program.

We agree that the term ''biogas'' in this pathway is used broadly in the industry to refer to various raw and processed forms of the biogas from various sources. However, under the existing requirements in sections 80.1426(f)(10) and (11), only biogas that is used for transportation fuel can qualify as renewable fuel for RIN generation under the RFS2 program. We believe the stipulations in sections 80.1426(f)(10) and (11) are clear that biogas used for non-transportation fuel purposes, such as an energy source for providing process heat would not qualify under this biogas pathway for RIN generation. Similarly, raw biogas would also not qualify under this pathway since unprocessed biogas cannot be used as transportation fuel. With regard to the fuel types that can be

[37] Swanson, R.M., Satrio, J.A., Brown, R.C., Platon, A., and Hsu, D.D. (2010) Techno-Economic Analysis of Biofuels Production Based on Gasification. NREL Technical Report NREL/TP–6A20–46587, *http://www.nrel.gov/docs/fy11osti/46587.pdf.*

[38] Skone, T.J. and Gerdes, K. (2008) NETL: Development of Baseline Data and Analysis of Life Cycle Greenhouse Gas Emissions of Petroleum-Based Fuels. *http://www.netl.doe.gov/energy-analyses/pubs/NETL%20LCA%20Petroleum-Based%20Fuels%20Nov%202008.pdf.*

[39] Emissions estimates are conservatively high.

produced from the raw biogas such as CNG, LNG, renewable electricity, renewable diesel, or naphtha, the pathway determinations for the final rule did not account for all factors relevant for the additional fuel types such as renewable electricity, renewable diesel or naphtha produced from the raw biogas through a chemical process. Therefore, renewable electricity, renewable diesel and naphtha produced from biogas do not qualify under the existing pathway.[40] For CNG and LNG, we concluded that these types of fuels were close enough to the physical molecules of biogas since these fuels only go through a physical process in which the biogas is compressed or liquefied, and that because CNG and LNG can be used directly for transportation purposes, thus meeting the provisions in sections 80.1426(f)(10) and (11), we concluded that CNG and LNG could qualify under the existing pathway. For the reasons discussed above, we are proposing to amend the existing biogas pathway to clearly state that only CNG and LNG produced from biogas from landfills, waste treatment plants and waste digesters, and used as transportation fuel, qualify as a cellulosic or advanced biofuel for RIN generation under the RFS2 program.

The current regulations provide a pathway for biogas produced from a bio-digester which uses manure. We are also proposing to expand the type of materials that may be used to produce CNG/LNG in a digester to include animal wastes, biogenic waste oils/fats/greases, separated food and yard wastes, and crop residues. These feedstock sources are already eligible in the existing rules pathways and therefore should reasonably be added to the bio-digester pathway. We are doing so in response to a petition request to generate RINs from biogas which is produced from bio-feedstock sources in addition to the already allowed manure, either individually or in combination with manure in a bio-digester. As with other LCA pathways using these materials, EPA is proposing to assume these waste materials do not have emissions associated with feedstock production, and therefore qualify as cellulosic or advanced renewable fuels when used to produce CNG/LNG.

To provide improvement for this revised pathway, we are proposing to revise the definition of biogas and add new definitions for renewable CNG and renewable LNG to section 80.1401 to read as follows:

We are proposing Biogas would mean a mixture of hydrocarbons that is a gas at 60 degrees Fahrenheit and 1 atmosphere of pressure that is produced through the conversion of organic matter. We are also proposing that Biogas would include landfill gas, gas from waste digesters, and gas from waste treatment plants. Waste digesters would include digesters processing animal wastes, biogenic waste oils/fats/greases, separated food and yard wastes, and crop residues. Waste treatment plants would include wastewater treatment plants and publicly owned treatment works.

We are proposing that Renewable compressed natural gas (''renewable CNG'') would mean biogas that is processed to the standards of pipeline natural gas as defined in 40 CFR 72.2 and that is compressed to pressures up to 3600 psi. We are also proposing that only renewable CNG that qualifies as renewable fuel and is used for transportation fuel can generate RINs.

We are proposing that Renewable liquefied natural gas (''renewable LNG'') would mean biogas that is processed to the standards of pipeline natural gas as defined in 40 CFR 72.2 and that goes through the process of liquefaction in which the biogas is cooled below its boiling point and weighs less than half the weight of water so it will float if spilled on water. We are also proposing that only renewable LNG that qualifies as renewable fuel and is used for transportation fuel can generate RINs.

2. New Registration (Contract Requirements) for Renewable Electricity and Fuels Produced From Biogas That Qualify as Renewable Fuel and That Are Registered for RIN Generation

The regulations as currently written allow a producer of biogas or renewable electricity[41] that qualifies as renewable fuel and has an approved fuel pathway in Table 1 of section 1426(f)(1) to register and generate RINs for the volume it produces under the RFS2 program. We modified the existing regulations to state that biogas is the feedstock used to produce renewable fuel, as described above. The revised regulations in sections 1426(f)(10) and (11) detail the requirements for distribution and tracking for renewable electricity and biogas used to produce fuel that qualifies as renewable fuel that can either be distributed in a dedicated pipeline or transmission line or distributed in a shared pipeline or power grid system. The purpose of these requirements is to provide EPA assurance and verification that once the biogas or renewable electricity is put into a dedicated or shared distribution system that in fact an equivalent volume of biogas or renewable electricity will be used for transportation fuel, and for no other purposes. The requirements are also meant to address concerns of double counting of the biogas or renewable electricity, especially in situations that the biogas or renewable electricity is placed in or loaded onto shared distribution systems that contain gas or electricity from non-renewable biomass sources. EPA intended to require producers to submit the information and contract requirements in sections 1426(f)(10) and (11) as part of the registration requirements for renewable electricity and renewable fuels produced from biogas that are used for transportation[42] fuel, but had not done so in the prior rulemakings. Therefore, as a natural outgrowth of the regulations for implementation and compliance purposes, we are proposing in this rulemaking to incorporate the requirements in sections 1426(f)(10) and (11) as part of registration requirements for producers of renewable electricity and renewable fuels produced from biogas that qualify as renewable fuel under the regulations under section 1450(b)(1)(iv)(C).

Section 1426(f)(11)(ii) of the regulations requires that, in order for renewable fuel made from biogas withdrawn from a commercial distribution system for use as a transportation fuel to generate RINs, the biogas introduced into the system must have been added to a common carrier pipeline. We propose to add a similar provision to section 1426(f)(11)(i) for renewable electricity, requiring a company to load the renewable electricity to a power grid shared by the second company that withdraws the electricity, such that the two companies must be physically connected to the same grid or located within the same area.

EPA is requesting comments about whether the other existing requirements in sections 1426(f)(10) and (11) for renewable electricity and renewable fuels from biogas used for transportation

[40] For this rulemaking, we conducted lifecycle analysis for renewable electricity, renewable diesel, naphtha produced from landfill gas, and are proposing new fuel pathways to Table 1 to Section 80.1426 for these fuel types. Please see section titled, ''Lifecycle Greenhouse Gas Emissions Analysis for Renewable Electricity, Renewable Diesel and Naphtha Produced from Landfill Biogas'' for the lifecycle analysis discussion in this rulemaking.

[41] EPA notes that currently, producers of renewable electricity that may qualify as a renewable fuel cannot register and generate RINs because there is no approved pathway in Table 1 for renewable electricity from any approved feedstock. But in the event that an approved pathway for renewable electricity is added to Table 1, EPA notes there are existing requirements such as tracking and distribution requirements recordkeeping and reporting that are applicable for the registration of renewable electricity for RIN generation.

[42] Distribution and registration requirements for biogas used as process heat, and not for RIN generation as renewable fuel is detailed in Section 1426(f)(12) and 1450(b)(1)(iv), respectively.

fuel are sufficient to provide assurance and verification for the following situations. First, do the proposed requirements provide assurance and verification that the same amount of biogas or renewable electricity is in fact delivered to the renewable fuel producer or end user who will actually use the biogas or renewable electricity for transportation purposes? If the proposed requirements are not sufficient, what alternative requirements should be considered? Second, are the proposed requirements sufficient to ensure that double counting does not occur, e.g., to ensure that the biogas or renewable electricity once it is loaded into a shared pipeline or power grid is not sold to multiple clients or for purposes other than for transportation purposes? Similarly, if the proposed requirements are not sufficient, what alternative requirements could be considered to ensure double counting does not occur?

3. Changes Applicable to All Biogas Related Pathways for RIN Generation

As discussed above, we have had many inquiries related to the ''biogas'' pathway, specifically regarding contract requirements for tracking the biogas through the distribution system and regarding what company along the production chain is considered the ''producer'' and eligible to generate RINs under the RFS2 program. In this rulemaking, we are proposing to revise and add new requirements for contracts to track the biogas as it moves into and out of the distribution system, as well as provisions on registration, reporting and recordkeeping. These proposed amended requirements are applicable to all pathways related to biogas that are eligible for RIN generation that are existing or proposed in this rulemaking.

In response to the question of what company is considered the producer of renewable fuel and eligible to generate RINs under the RFS program, we propose to clarify who is the ''producer'' for renewable CNG/LNG and renewable electricity. We propose that the ''producer'' of renewable CNG/LNG is the company that compresses or liquefies the gas and distributes the CNG/LNG for transportation fuel, and for renewable electricity, the ''producer'' is the company that distributes the electricity for use as transportation fuel. There are two registration situations that this clarification will address: (1) The owner/operator of a landfill collects biogas and processes it to a qualifying renewable CNG/LNG/electricity for transportation use and distributes on site and (2) the owner/operator of a landfill collects biogas and it is processed into a qualifying renewable CNG/LNG/electricity for transportation use by a contracted third party and distributed by this third party. The party that converts the biogas to renewable CNG/LNG/electricity and distributes for use as a transportation fuel is responsible for RIN generation. Under the first scenario, the registration package, including the engineering review, would cover the biogas source (landfill, waste digester, etc.) as well as the distribution that is occurring on site. Under the the second scenario, the registration package, including engineering review, would cover the biogas source (landfill, waste digester, etc.) the pipeline (common carrier or dedicated) and each distribution facility. By requiring the party that is responsible for conversion and distribution to register as the RIN generator, we can prevent RINs from being generated for a batch or renewable CNG/LNG/electricity prior to use as a qualifying transportation fuel. For any of the fuels, the company designated as the ''producer'' will be required to register under the RFS2 program. We seek comment on our proposed definition of producer regarding renewable CNG/LNG and renewable electricity.

We acknowledge that the process train from raw biogas to the final transportation fuel is complex, and may include many companies and processing steps from the point when the raw biogas is withdrawn from its source (such as landfills, waste digesters, waste treatment plants), processed and converted into biofuel and distributed to consumers. Alternatively, the fuel may be cleaned at a biogas facility to pipeline quality specifications for distribution, and then withdrawn from the commercial pipeline to be processed further at another production facility into renewable CNG/LNG or renewable electricity. Due to the complexity of the many entities potentially involved in this process train, we are proposing that the company deemed as the ''producer'' under the qualifications described above also be responsible for providing all the required information and supporting documentation in their registration, reporting and recordkeeping to track and verify the information from point of extraction of the raw biogas from its original source, and all the processing steps and distribution in between, to the last step where the actual fuel is used for transportation purposes. In the engineering review report required for registration, the producer must include documentation that the professional engineer performed site visits at each production facility, including the biogas facility and the facility that produces the final fuel (if these are not the same facility). The producer must also review and verify all related supporting documents such as design documents, calculations, regulatory permits, and contracts between facilities that track the raw biogas from the point of withdrawal from its source, the various injection/withdraw points into the distribution pipeline, the various production facilities, and the final step for use as transportation fuel. We believe these requirements will ensure that producers will perform due diligence that the fuel for which they generate RINs under the RFS2 program are in compliance with all the regulatory requirements for renewable fuel. The proposed registration, reporting and recordkeeping requirements are in sections 80.1426(f), 80.1450, 80.1451 and 80.1454 in this rulemaking. Additional changes regarding the contract requirements for distribution of the biogas in shared commercial pipelines are discussed below, and can be located in sections 80.1426(f)(10), (11), and (13).

4. Changes Applicable To Process Electricity Production Requirement for the Biogas-Derived Cellulosic Diesel and Naphtha Pathways

In this proposed rulemaking, EPA conducted greenhouse gas (GHG) lifecycle analysis for various renewable fuels produced from landfill gas as new or revised advanced and cellulosic biofuel pathways that will be added to Table 1 to section 80.1426(f).[43] For some of these pathways, we are proposing to add various registration, recordkeeping and reporting requirements to the regulations to ensure that the facilities using these pathways meet the parameters stipulated in the lifecycle analysis. The additional registration, recordkeeping and reporting requirements are discussed in detail below.

For the proposed fuel pathways for cellulosic diesel and cellulosic naphtha produced from landfill gas, we are proposing to require the renewable fuel production facility to produce a minimum of 20 percent of the process electricity used at the facility on a calendar year basis, from raw landfill gas, waste heat from the production process, unconverted syngas from the

[43] Refer to preamble discussion for these various biogas pathways in section titled, ''Lifecycle Greenhouse Gas Emissions Analysis for Renewable Electricity, Renewable Diesel and Naphtha Produced from Landfill Biogas.''

F–T process, fuel gas from the hydroprocessing or combined heat and power (CHP) units that use non-fossil fuel based gas or other renewable sources. We propose that if less than 20 percent (on an annual average basis) of process energy comes from one of these alternative sources, then no cellulosic RINs can be generated for that year.

For the renewable fuel production facility applying to use the proposed fuel pathway with the requirement to internally produce at least 20 percent of the total amount of process electricity used at its facility, we are proposing the facility submit to EPA the information described below to demonstrate compliance with this requirement. For registration purposes, we are proposing that producers submit the following additional information in the process fuel supply plan that is currently required as part of the registration process (estimated summaries are to be reported on an annual/calendar year basis):

—Estimated amount of total electricity used at the facility
—Estimated amount of total electricity purchased for the facility
—Estimated amount of total renewable electricity produced on-site, including the source of the energy and the equipment and/or process used to generate the renewable electricity
—Calculation that verifies the facility meets the specified 20 percent minimum electricity production requirement based on the reported total amount of electricity used at the facility, total amount of electricity purchased, and total amount of renewable electricity produced

For reporting purposes, we are proposing for producers to submit the following additional information as part of their existing quarterly and annual reporting obligations (reported amounts should be provided as monthly summaries on an annual/calendar year basis, and must be obtained from a utility meter that is continuously measured):

—Actual total amount of electricity used at the facility
—Actual total amount of electricity purchased for the facility
—Actual amount of total renewable electricity produced on-site, including source of energy and the equipment or process used to generate the renewable electricity
—Calculation that verifies the facility meets the specified 20 percent minimum electricity production requirement based on the reported total amount of electricity used at the facility, total amount of fossil-fuel based electricity purchased, and total amount of renewable electricity produced

For recordkeeping purposes, we are proposing that producers retain the additional information, calculations and supporting documents required for registration and reporting as discussed above. The regulatory requirements for registration, reporting and recordkeeping as discussed in this proposed rulemaking can be located in the following applicable regulatory sections 80.1450, 80.1451 and 80.1454, respectively.

D. Amendment to the Definition of ''Crop Residue'' and Definition of a Pathway for Corn Kernel Fiber

We propose to amend the definition of ''crop residue'' so that this category includes only feedstock sources that are determined by EPA would not result in a significant increase in direct or indirect GHG emissions. ''Crop residue'' is the biomass left over from the harvesting or processing of planted crops from existing agricultural land and any biomass removed from existing agricultural land that facilitates crop management (including biomass removed from such lands in relation to invasive species control or fire management), whether or not the biomass includes any portion of a crop or crop plant. Biomass is considered crop residue only if the use of that biomass for the production of renewable fuel has no significant impact on demand for the feedstock crop, products produced from that feedstock crop, and all substitutes for the crop and its products including the residue, nor any other impact that would result in a significant increase in direct or indirect GHG emissions.

EPA is amending the definition of ''crop residue'' to confirm the meaning of the term ''left over'' in the text of this definition. The phrase ''left over'' in our original definition of ''crop residue'' is meant to indicate that the use of a residue as a biofuel feedstock should not increase demand for the crop it is derived from, should not induce further crop production, and should not result in additional direct or indirect GHG emissions. The residue must come from crop production or processing for some other primary purpose (e.g., refined sugar, corn starch ethanol), such that the crop residue is not the reason the crop was planted. The residue must also come from existing agricultural land, the exact definition of which is laid out in our current regulations that define ''renewable biomass''.[44] Further, the residue should generally not have a significant market in its own right, to the extent that removing it from that market to produce biofuels instead will result in increased GHG emissions. EPA is seeking comments on this revision to the crop residue definition. EPA invites all comments regarding this revision, but specifically invites comments regarding the potential for the revision to create a significant shift in direct or indirect GHG emissions and what ought to constitute a ''significant'' increase or decrease in GHG emissions in the context of this definition.

EPA has previously identified several potential feedstocks that we believe meet the criteria of crop residue. Table IV.D.–1 lists feedstocks which may fit the definition of crop residue. Most of these feedstocks were discussed in the final RFS2 rulemaking. For example, EPA analyzed the agricultural sector GHG emissions of using corn stover for biofuels in the final RFS2, and found that fuel produced from this feedstock met the 60% GHG reduction threshold for cellulosic biofuels. Since the direct and indirect impacts of citrus residue, rice straw, and wheat straw removal were expected to be similar to corn stover, EPA also applied the land use change impacts associated with corn stover to citrus residue, rice straw, and wheat straw. Based on that analysis, EPA found that fuels produced from citrus residues, rice straw, and wheat straw also met the 60% reduction threshold. EPA further determined that fuels produced from materials left over after the processing of a crop into a useable resource had land use impacts sufficiently similar to agricultural residues to also meet the 60% threshold. EPA specifically cited bagasse left over from sugarcane processing as an example of this type of residue. EPA is seeking comment on whether the feedstocks on this list should be considered crop residues, if these feedstocks would have similar direct and indirect impacts as corn stover, and whether additional feedstocks should also be included in this list.

TABLE IV.D.–1—FEEDSTOCKS THAT MAY QUALIFY AS CROP RESIDUE

Feedstock	D Code
Sugarcane Bagasse.	D–3 Cellulosic biofuel.
Corn Kernel Fiber (excluding the corn starch component).	D–3 Cellulosic biofuel.

[44] *See* specifically § 80.1401 Definitions.

TABLE IV.D.–1—FEEDSTOCKS THAT MAY QUALIFY AS CROP RESIDUE—Continued

Feedstock	D Code
Corn Stover	D–3 Cellulosic biofuel.
Citrus Residue	D–3 Cellulosic biofuel.
Rice Straw	D–3 Cellulosic biofuel.
Wheat Straw	D–3 Cellulosic biofuel.

While EPA believes that, under current conditions, generation of RINs for batches of renewable fuel produced from the feedstocks listed in Table IV.D.–1 above would not result in a significant increase in direct or indirect GHG emissions, we also acknowledge the potential for this assessment to change in the future based on unforeseeable factors. For example, some new use for one of these products could be developed which would change our assessment that the feedstock has no significant market in its own right. Further, it is possible that, at some point in the future, large enough quantities of renewable fuel could be produced from one of these fuels to create demand pull for the feedstock, potentially altering the behavior of producers of the residue and leading to significant increases in direct or indirect GHG emissions. To our knowledge, this is not currently the case for any of the feedstocks listed above. However, EPA will continue to monitor RIN generation from fuel produced using each of these feedstocks and the general use of these feedstocks in the marketplace. We further reserve the right to revisit the status of any feedstock that we have determined qualifies under the crop residue pathway. Should any feedstock qualifying as a crop residue be used to generate significant quantities of ethanol in the future, or should a significant market emerge for the product such that there is demand pull for it in excess of the demand pull for the planted crop from which it is a derived byproduct, we will revisit whether that feedstock should remain under the crop residue pathway or be subjected to further scrutiny. EPA is seeking comment on this approach and on the potential for significant demand pull to emerge for the feedstocks we are proposing to consider as crop residues.

We also propose that this definition of ''crop residue'' includes corn kernel fiber. Corn kernel fiber is not specifically mentioned as a type of crop residue under the Renewable Fuel Standard (RFS2) regulations. Per the RFS2 definition of ''crop residue'', EPA must evaluate whether corn kernel fiber is ''left over from the harvesting or processing of planted crops'' and that it has no ''impact that would result in a significant increase in direct or indirect GHG emissions'' for this feedstock to qualify as a residue.

One additional consideration in the classification of corn kernel as a crop residue is the fact that some amount of corn starch might still adhere to the corn kernel after separation. The percentage of contamination will vary, but as much as 20% of the final fuel could be derived from corn starch. By definition, corn starch ethanol can only qualify as a renewable fuel, not as an advanced fuel. However, our current regulations state that ''producers and importers may disregard any incidental, de minimis feedstock contaminants that are impractical to remove and are related to customary feedstock production and transport''.[45] Therefore, EPA is seeking comment on whether the definition of crop residue should be amended to explicitly exclude the corn starch component.

EPA also invites comment on how RINs should be allocated for ethanol derived from corn fiber. EPA has existing regulations that define procedures for generating RINs from batches of fuel that contain multiple feedstocks, including feedstocks that generate RINs of different D codes.[46] We believe that these regulations provide sufficient guidance to producers and importers regarding how to assign RINs to batches of renewable fuel that can be described by two or more pathways (e.g., corn starch ethanol and corn kernel fiber ethanol). However, we invite comment on the sufficiency of these regulations with regards to the assignment of RINs to coprocessed batches of corn starch ethanol and corn kernel fiber ethanol, including whether producers have the technological capability to adequately demonstrate volume produced under each pathway.

To determine whether the use of corn kernel fiber to produce ethanol would lead to increased direct or indirect GHG emissions, EPA conducted a detailed assessment of the two major potential sources of emissions from this feedstock, namely effects on feed markets and effects on demand for corn. The proposed method of acquiring corn kernel fiber is to extract it from matter that is otherwise converted to dried distillers grains (DDG) during the dry mill corn ethanol process. Consequently, this analysis relied significantly on the assessment of corn starch ethanol-derived DDG that was conducted for the RFS2 final rule, adjusting the analysis to account for the extraction of fiber from this product. The analysis also drew substantially on the available scientific literature on low fiber DDG (LF–DDG), as well as the expertise of the U.S. Department of Agriculture. Potential producers also submitted important data to EPA that helped determine whether producing cellulosic ethanol from corn kernel fiber would result in a significant increase in GHG emissions. This included a full nutritional analysis of LF–DDG for swine, poultry, and cattle.

EPA found that extracting the fiber from corn matter used to produce standard DDG would not have a significant effect on feed markets. Processors who extract the fiber from corn produce a feed product known as LF–DDG, as opposed to standard DDG which retains the fiber. The scientific literature on LF–DDG animal nutrition has found that this product has at least equal, and perhaps even slightly superior, nutritional value for swine and poultry compared to standard DDG.[47] This means that, even though the physical volume of the DDG produced by ethanol plants using corn kernel fiber extraction technology will be somewhat smaller, its nutritional content for swine and poultry will be equivalent to or greater than their output without fiber extraction.

Conversely, LF–DDF is an inferior feed for cattle compared to standard DDG, since ruminants benefit from ingesting corn fiber in DDG.[48] Therefore, EPA expects swine and poultry producers to absorb the supply of LF–DDG, while the cattle and dairy industry will continue to consume standard DDG. With this dynamic in place, fiber extraction from DDG should not significantly affect feed markets, since there will be no reduction in the overall supply of DDG in terms of nutritional content nor will there be any impact on aggregate demand for other animal feed sources.

If enough corn ethanol producers adopt fiber extraction technology, LF–DDG could saturate swine and poultry demand and spill over into dairy and cattle feed markets. If a situation arises where LF–DDG begin to replace standard DDG in cattle markets, this could lead to an increase in feed

[45] *See* specifically § 80.1426(f)(1).

[46] *See* specifically § 80.1426(f)(3).

[47] *See, e.g.,* Kim, E.J., C.M. Parsons, R. Srinivasan, and V. Singh. 2010. *Nutritional composition, nitrogen-corrected true metabolizable energy, and amino acid digestibilities of new corn distillers dried grains with solubles produced by new fractionation processes. Poultry Science* 89, p. 44, available on the docket for this rulemaking. *See also* additional studies cited within Kim et al 2010.

[48] *See* Shurson, G.C. 2006. *The Value of High-Protein Distillers Coproducts in Swine Feeds. Distillers Grains Quarterly,* First Quarter, p. 22, available on the docket for this rulemaking.

demand, most likely in the form of increased demand for fiber supplements in dairy and cattle feed. This could cause an increase in GHG emissions. If swine and poultry demand for LF–DDG becomes saturated, demand for standard DDG in the cattle and dairy industries should create sufficient market incentives for the remaining corn starch ethanol producers to decide against adopting corn fiber ethanol production. EPA believes this will prevent a situation where there is insufficient supply of standard DDG in the cattle and dairy industries. However, as noted above, EPA reserves the right to reexamine corn kernel fiber as a feedstock in the future.

EPA's analysis indicates that producing cellulosic ethanol from corn kernel fiber is unlikely to increase overall demand for corn. In order to meet the definition of a crop residue, the source of corn kernel fiber must be a crop processing facility (e.g., a corn starch ethanol plant). A corn kernel fiber ethanol producer cannot purchase whole corn specifically for the generation of corn fiber ethanol and still qualify their feedstock as crop residue. EPA is seeking comment on this analysis.

Based on our assessment, EPA proposes that corn kernel fiber would meet the definition of a crop residue, and qualify for Cellulosic Ethanol and Advanced Biofuel (D-codes 3 & 5, respectively) RINs under the RFS2. EPA is seeking comment on whether corn kernel fiber should be considered a crop residue.

E. Consideration of Advanced Butanol Pathway

1. Proposed New Pathway

EPA is proposing to add a new pathway to Table 1 to section 80.1426 that allows butanol made from corn starch using a combination of advanced technologies to meet the 50% GHG emissions reduction needed to qualify as an advanced renewable fuel. This pathway applies to dry mill fermentation facilities that use natural gas and biogas from an on-site thin stillage anaerobic digester for process energy with combined heat and power (CHP) producing excess electricity of at least 40% of the purchased natural gas energy of the facility (the proposed ''advanced butanol pathway'').

GEVO Incorporated submitted a petition requesting authorization to generate D-code 5 RINs for fuel produced through the GEVO butanol pathway. A petition is required because the proposed process utilizes a high yield butanol fermentation process that is different from those analyzed as part of the RFS2 corn ethanol pathways, and does not use the approved advanced technologies shown in Table 2 to section 80.1426 of the RFS2 regulations.

EPA's evaluation of the lifecycle GHG emissions of the advanced butanol pathway under this petition request is consistent with EISA's applicable requirements, including the definition of lifecycle GHG emissions and threshold evaluation requirements. It was based on information regarding GEVO's production process that was submitted under a claim of Confidential Business Information (CBI) by GEVO on April 11, 2011. The information provided included the mass and energy balances necessary for EPA to evaluate the lifecycle GHG emissions of the advanced butanol pathway.

The lifecycle GHG emissions of fuel produced pursuant to the advanced butanol pathway were determined as follows:

Feedstock production—The advanced butanol pathway uses corn starch as a feedstock. Corn starch is one of the feedstocks already listed in Table 1 to section 80.1426 of the RFS2 regulations. Since corn starch has already been evaluated as part of the RFS2 final rule, no new feedstock production modeling was required.

The FASOM and FAPRI models were used to analyze the GHG impacts of the feedstock production portion of the fuel's lifecycle. The same FASOM and FAPRI results representing the emissions from an increase in corn production that were generated as part of the RFS2 final rule analysis of the existing corn butanol pathways were used in this analysis of the advanced butanol pathway. These results represent agriculture/feedstock production emissions for a certain quantity of corn produced. For the RFS2 analysis, this was roughly 960 million bushels of corn used to produce 2.6 billion gallons of fuel. We have calculated GHG emissions from feedstock production for that amount of corn. EPA does not believe the advanced butanol process for converting corn into butanol will materially affect the total amount of corn used for biofuels and modeled as part of the RFS2 final rule. Based on information provided by industry, the technologies to produce corn butanol are primarily being targeted at retrofitting existing corn ethanol facilities, where the infrastructure to produce renewable fuels already exists and the capital expenditures would be relatively small. Therefore, the existing agricultural sector modeling analyses for corn as a feedstock remain valid for use in estimating the lifecycle impact of renewable fuel produced using the advanced butanol pathway. The Agency is seeking comment on whether there is any research to suggest that converting corn into an advanced butanol pathway would materially affect the total amount of corn used.

GEVO provided, as part of the information claimed CBI, their process yield in terms of gallons of fuel produced per bushel of corn. Based on the data, GEVO's process yield is slightly more efficient than the pathways modeled as part of the RFS2 rulemaking. Therefore, compared to the corn butanol pathways already analyzed, the GEVO process results in 0.93% more Btus of fuel produced for the same amount of corn feedstock.

Fuel production—The fuel production method included in this advanced butanol pathway involves the production of butanol from corn starch in a dry mill. The amount and type of energy used in this analysis is different than production methods that were analyzed under the final rule. While there were slight differences in the total amount of natural gas and electricity used in this analysis, the main difference was the use of biogas and production of excess electricity. To analyze the GHG impacts of the advanced butanol pathway, EPA utilized the same approach that was used to determine the impacts of processes in the RFS2 corn butanol pathways.

The amount and type of energy used was taken from GEVO's mass balance & energy balance submitted to EPA. GEVO submitted energy data on natural gas and biogas (in Btus) and electricity (in kWhs) inputs, as well as gallons of fuel produced. Biogas and natural gas are used in combination, while the RFS2 corn butanol analyses only considered natural gas or biogas used independently, not in combination.

The emissions from the use of energy were calculated by multiplying the amount of energy by emission factors for fuel production and combustion, based on the same method and factors used in the RFS2 final rulemaking. The emission factors for the different fuel types are from GREET and were based on assumed carbon contents of the different process fuels.

One area where EPA is soliciting comments is on the most appropriate energy content assumption to use for butanol (lower heating value). As part of this analysis, EPA used the GREET value for the energy content of butanol,

which is 99,837 Btus per gallon.[49] Differences in the measurement of the energy content of butanol can occur for a number of reasons including variations amongst isomers (t-butanol, n-butanol, isobutanol, and sec-butanol), and differences in testing methodologies. EPA is seeking comment on whether there are any reasons why EPA should change its assumptions and use a different energy content of butanol.

The RFS2 corn butanol pathways included an estimate for DDGs co-product production which we similarly applied to the advanced butanol production process. Since DDGs impact the agricultural markets, production of DDGs was already included as part of the FASOM and FAPRI modeling already described in the feedstock production section, above. Thus no additional co-product credits for the DDGs are applied for the fuel production stage of the analysis.

The advanced butanol production process analyzed here also results in excess electricity production. As per the pathway description the process produces excess electricity of at least 40% of the purchased natural gas energy of the facility. The onsite emissions of the electricity production are accounted for in the facility natural gas and biogas use. The co-product credit of the excess electricity is accounted for by assuming the electricity offsets average grid electricity production and results in associated emission reductions.

The estimated production emissions from the advanced butanol process are shown below in Table V.F.–1.

TABLE V.F.–1—FUEL PRODUCTION EMISSIONS FOR THE ADVANCED BUTANOL PROCESS

Fuel production source	GEVO isobutanol (g CO_2-eq./mmBtu)
On-Site Emissions	15,273
Upstream (natural gas and electricity production)	2,424
Emissions Credit from Offset Electricity	−17,448
Total Fuel Production Emissions	249

Fuel and feedstock distribution—We used the same feedstock distribution emissions assumption considered for corn butanol under the RFS2 final rule for the advanced butanol pathway corn feedstock. The fuel type, butanol, and hence the fuel distribution for butanol, was already considered as part of the RFS2 final rule. Therefore, the existing feedstock and fuel distribution lifecycle GHG impacts for corn butanol were applied to the advanced butanol pathway analysis.

Use of the fuel—The advanced butanol pathway produces a fuel that was analyzed as part of the RFS2 final rule. Thus, the fuel combustion emissions calculated as part of the RFS2 final rule for butanol were applied to our analysis of the advanced butanol pathway.

The advanced butanol fuel was then compared to baseline petroleum gasoline, using the same value for baseline gasoline as in the RFS2 final rule analysis. The results of the analysis indicate that the advance butanol pathway would result in a GHG emissions reduction of 51.3% compared to the gasoline fuel it would replace.

Based on our LCA, we are proposing to add a new pathway to Table 1 to section 80.1426 that includes butanol from corn starch using the butanol process described here as an advanced biofuel (D–5 RINs). EPA invites comments on the assumptions used in this analysis.

Table V.F.–2 below breaks down by stage the lifecycle GHG emissions for the RFS2 corn butanol pathway, the advanced butanol pathway and the 2005 gasoline baseline. This table demonstrates the contribution of each stage in the fuel pathway and its relative significance in terms of GHG emissions.

TABLE V.F.–2—LIFECYCLE GHG EMISSIONS FOR THE ADVANCED BUTANOL PATHWAY, 2022

[Kg CO2-eq./mmBtu]

Fuel type	RFS2 corn ethanol, natural gas fired dry mill 63% dry DDGS	GEVO butanol	RFS2 2005 gasoline baseline
Net Domestic Agriculture (w/o land use change)	4	4	
Net International Agriculture (w/o land use change)	12	12	
Domestic Land Use Change	−4	−4	
International Land Use Change, Mean (*Low/High*)	32 (*21/46*)	*31*	
Fuel Production	28	0	19
Fuel and Feedstock Transport	4	4	*
Tailpipe Emissions	1	1	79
Total Emissions, Mean	77 (66/91)	48	98
% Reduction	−21%	−51%	

* Emissions included in fuel production stage.

Table V.F.–3 lists the proposed D-Codes by fuel type (butanol), considering the feedstock (corn starch) and different production process requirements.

[49] The GREET value is based on: Guibet, J.-C., 1997, Carburants et Moteurs: Technologies, Energie, Environnement, Publication de l'Institut Français du Pétrole, ISBN 2–7108–0704–1.

TABLE V.F.–3—PROPOSED D CODES FOR BUTANOL

Fuel type	Feedstock	Production process requirements	D-Code
Butanol	Corn starch	Fermentation; dry mill using natural gas, biomass, or biogas for process energy	6
Butanol	Corn starch	Fermentation; dry mill using natural gas and biogas from on-site thin stillage anaerobic digester for process energy w/CHP producing excess electricity of at least 40% of the purchased natural gas energy used by the facility.	5

2. Butanol, Biobutanol, and Volatility Considerations

Butanol is a flammable colorless liquid that is used as a fuel and as an industrial solvent. Butanol is composed of the chemical elements hydrogen, oxygen, and carbon. It can be made from petroleum or renewable biomass, such as corn, grasses, agricultural waste and other renewable sources. It can be used in internal combustion engines as an additive to gasoline and is currently registered under the Fuel and Fuel Additives Registration System (FFARS) for use at up to 12 volume percent. A higher blend level would require a new FFARS registration that would include meeting Tier 1 and Tier 2 health effects testing requirements. Biobutanol is the common name for butanol made from renewable sources.

There has been an increased interest in the use of biobutanol as a direct result of the requirements for increased use of renewable fuel volumes, adopted in EISA 2007. These provisions require an increase in the use of renewable fuels, with 36 billion gallons of renewable fuel to be used in the U.S. by 2022. Parties required to meet these standards are interested in cost effective and practical ways to satisfy the standards and meet the performance needs of the vehicles and engines. Biobutanol is one attractive option because of its higher energy density, lower blending vapor pressure, and lower heat of vaporization in comparison to ethanol, as well as the fact that it can be distributed as a gasoline blend throughout the fungible gasoline distribution system.

The Clean Air Act (section 211(h)(4)) requires EPA to adopt regulations limiting the volatility of gasoline during the summer months, when ozone is of most concern, including a one pound per square inch (psi) Reid Vapor Pressure (RVP) increase in the volatility limit for blends of gasoline containing 9–10% ethanol (E10). This allowance for a 1 psi increase in allowable volatility is commonly called the 1 psi waiver.

EPA's regulations at 40 CFR 80.27 adopt RVP standards that apply to the gasoline at all points in the distribution system, including the retail outlet. Under the provisions for the 1 psi waiver, blends of gasoline that contain from 9 volume percent to 10 volume percent ethanol are allowed to have volatility 1 psi higher than otherwise would be allowed (40 CFR 80.27(d)(2)). The chemical characteristics of ethanol are such that blends of gasoline with less than 9 volume percent to 10 volume percent ethanol would still have a significant increase in volatility. Thus the restriction on the 1 psi waiver to blends that have 9 volume percent to 10 volume percent ethanol has the effect of prohibiting the blending of E10 with other gasoline/renewable fuel blends at any point in the gasoline distribution system (wholesale or retail) in conventional gasoline areas during the summer control season. Blends of E10 gasoline and gasoline that is not E10 would have less than 9 volume percent or greater than 10 volume percent ethanol, would have a resulting increase in volatility compared to E0, but would not have the 1 psi waiver to allow for such an increase. This increase would lead to an RVP above the allowable limit, unless a sub-RVP gasoline blendstock was used. The practical effect is a prohibition on commingling of E10 and gasoline blends other than E10.

Under the current regulations, EPA applies the RVP standard to the commingled mixture as a whole, not to the components of the commingled mixture. Once the ethanol and non-ethanol blends are mixed, the commingled mixture is treated as the gasoline that is tested and compared to the RVP standard. A single RVP value is determined by testing the volatility of the commingled mixture, and this is compared to the standard. If the mixture has from 9 volume percent to 10 volume percent ethanol, then the 1 psi waiver applies to the mixture. If the mixture has a different percentage of ethanol, whether lower or higher, then the 1 psi waiver does not apply to the mixture.

This avoids a situation where there is an overall increase in volatility because of the commingling of E10 and gasoline that is not E10. As discussed below, the chemical characteristics of ethanol and the nonlinear nature of the volatility increase associated with varying volumes of ethanol, mean that mixing E10 gasoline with gasoline that is not E10 typically results in a net overall increase in emissions—the mixture has a higher volatility and emissions than the separate gasolines had on average before they were mixed.

Several parties have identified this as an obstacle that currently inhibits the opportunity for biobutanol to enter the commercial market. The primary issue is application of the RVP regulations at the final point of fuel dispensing, when the biobutanol (Bu) and the ethanol blends would be mixed, that is in a storage tank at the retail station. When a butanol product that complies with the RVP standards prior to commingling (e.g., a complying Bu12 blend) is commingled with a compliant E10 in underground storage tanks at fuel dispensing facilities, the resulting mix generally would exceed the applicable RVP standard as EPA's RVP regulations currently apply the standard. Certain fuels, including renewable biofuels such as butanol, however, do not have a net negative impact on RVP when blended with E10 at wholesale or retail. That is, the RVP and related emissions of the commingled blend of butanol and ethanol is no higher than the average RVP if the fuels had never been commingled. Thus, in these kinds of circumstances it may be appropriate to adopt a modified approach to applying the RVP standard to permit the commingling of complying E10 blends with complying butanol blends at wholesale and retail, as there is no overall degradation of RVP and the air quality impacts compared to what would occur if they were not blended.

Today, the agency is providing some additional background on this issue and requesting information for use in deciding whether EPA can and should modify its RVP regulations as discussed below. Specifically, we are inviting comment on the ability of regulated parties to comply with the existing regulations by segregating biobutanol blends from ethanol blends and whether there is a need to change the regulations. We are also seeking comment on an alternative approach to applying the RVP standards to a commingled mixture of E10 with biobutanol or other approved gasoline additives, where the additives have

characteristics such that there is no net adverse emissions effect from the commingling. We are inviting comments as to whether the RVP standards can and should be applied such that the commingled mixture of E10 and specified blends of gasoline additives such as biobutanol is treated as complying with the RVP standard as long as the components of that mixture complied with the RVP standard prior to the commingling. This approach would provide a limited modification to how the RVP standards are applied, and the modification would apply for only certain fuel mixtures—those where the overall or net volatility of the commingled mixture is no higher than the weighted average of the original blends themselves, such that there is no adverse impact on emissions from the mixing compared to what would have occurred without such mixing. In order to assist parties in preparing comments, EPA is providing some additional background regarding the RVP program in the following paragraphs.

Background and History of Volatility Regulations

Reid Vapor Pressure (RVP) is the most common measure of gasoline volatility under ambient conditions. In 1989, EPA began reducing gasoline volatility by limiting its RVP (54 FR 11868, March 22, 1989) (40 CFR 80.27). Due to the presence of gasoline in certain markets mixed with about 10 volume percent ethanol (known as gasohol at the time), and because blending an alcohol into gasoline increases the volatility of the final product, EPA provided an additional 1 psi allowance for such blends. In the absence of the 1 psi allowance, a special blend stock would have been required for such blends to comply with the RVP standards and such sub-RVP blendstocks did not exist at the time. EPA imposed the RVP standards at all points in the gasoline distribution system, i.e., anywhere gasoline is sold, supplied, offered for sale or supply or transported, including service stations, refinery shipping, tanks, importer shipping tanks, pipeline and bulk terminals and plants. (40 CFR 80.28) (1989). In 1990, the agency promulgated additional regulations that further lowered the RVP standards. (55 FR 23658, June 11, 1990). EPA continued to provide both the 1.0 psi allowance to fuel blends containing about 10 volume percent ethanol, (40 CFR 80.27) (1990), and the requirement that RVP standards applied at all points in the distribution system.

Congress largely codified the approach taken in EPA's RVP regulations by adding a new section 211(h) in the 1990 CAA amendments. Section 211(h)(1) requires EPA to set the maximum RVP standard during the high ozone season as 9.0 psi. EPA was to ''promulgate regulations making it unlawful for any person during the high ozone season to sell, offer for sale, dispense, supply, offer for supply, transport, or introduce into commerce gasoline with a Reid Vapor Pressure in excess of 9.0 pounds per square inch (psi).'' Lower RVP standards could be set for ozone nonattainment areas. *See* Clean Air Act section 211(h)(1). Section 211(h)(2) addresses the RVP standard that apply in attainment areas, and sets the standard at 9.0 psi for attainment areas with authority for EPA to set a more stringent RVP level under certain circumstances. In section 211(h)(2), Congress allowed a 1-psi waiver for E10 gasoline, stating: ''For fuel blends containing gasoline and 10 percent denatured anhydrous ethanol, the Reid vapor pressure limitation under this subsection shall be one pound per square inch (psi) greater than the applicable Reid vapor pressure limitations established under paragraph (1).'' Additionally, Congress enacted a conditional defense against liability for violations of the RVP level allowed under the 1 psi waiver by stating that ''[p]rovided; however, that a distributor, blender, marketer, reseller, carrier, retailer, or wholesale purchaser-consumer shall be deemed to be in full compliance with the provisions of this subsection and the regulations promulgated there under if it can demonstrate that—(A) the gasoline portion of the blend complies with the Reid vapor pressure limitations promulgated pursuant to this subsection; (B) the ethanol portion of the blend does not exceed its waiver condition under subsection (f)(4) of this section; and (C) no additional alcohol or other additive has been added to increase the Reid Vapor Pressure of the ethanol portion of this blend.'' Section 211(h)(4).

In a 1991 rulemaking, EPA modified the RVP regulations to conform to the 1990 amendments (56 FR 64704, December 12, 1991). These regulations addressed the RVP standards in attainment areas, required the use of denatured anhydrous ethanol as a specific condition for the 1-psi waiver for fuel blends containing gasoline and from 9 volume percent to 10 volume percent ethanol, and included a new defense against liability for violations of the RVP standards for such fuel blends. We made no changes to the requirement that the RVP standards applied at all points in the distribution system.

What modification is EPA considering to the application of the RVP standards to certain fuel blends?

Gasoline and ethanol are mixed or blended after the refining process. The practice of blending ethanol with gasoline increases the RVP of the resulting blend by approximately 1.0 psi. It is a non-linear relationship, most of the volatility increase occurs after just a few percent of ethanol have been added, with the volatility increasing more slowly as the gasoline ethanol blend increases to 10 volume percent. Above 10 volume percent the volatility generally does not increase any more, and at even higher levels of ethanol the volatility starts to decrease again. As explained above, section 211(h)(4) provides a 1-psi waiver for fuel blends containing gasoline from 9 volume percent to 10 volume percent ethanol. The absence of such a waiver would have required the creation of a production and distribution network for sub-9.0 psi RVP gasoline, to offset the increase in volatility associated with blending ethanol into the gasoline. At the time the costs of producing and distributing an additional grade of this type of fuel, especially in consideration of the low volumes of fuel being blended with ethanol at the time, would have likely been prohibitive and resulted in the termination of the availability of ethanol in the marketplace. Thus, the 1-psi waiver facilitated the participation of ethanol in the transportation fuel industry while also limiting gasoline volatility resulting from ethanol blending.

But the RVP levels of gasoline actually used by consumers are dependent on the mixture of alcohol blends and gasoline that are commingling in either vehicle or storage tanks. Depending on the mixture, the resulting RVP level could be significantly higher than the average volatility of the fuels prior to the commingling. This is because the volatility increase when ethanol is added to gasoline is non-linear, with a large increase with the first few percent and then slowly tapering off as the concentration increases (see Illustration V.F.–4). In other words, mixing E10 and EO gasoline results in a net increase in the volatility of the gasoline mixture, compared to the average volatility that would occur absent such mixing. For example, 2000 gallons of 10 psi E10 added to a service station tank with 8000 gallons of 9.0 psi E0 would result in 10,000 gallons of fuel with a volatility of approximately 10 psi. However if the fuels had not been mixed, the average volatility of the 10000 gallons would

have been 9.2 psi. The emissions associated with the commingled mixture (10000 gallons at 10 psi) would be significantly higher than the emissions associated with the two separate blends of 2000 gallons at 10 psi and 8000 gallons at 9 psi. The commingling thus results in an adverse environmental impact compared to what would occur absent the commingling. EPA's current RVP regulations address this adverse emissions impact by applying the RVP standard to the commingled mixture as a single fuel. In this case the commingled mixture has an RVP of 10 psi. The 1 psi waiver does not apply as the mixture is now 2% ethanol, not from 9 volume percent to 10 volume percent ethanol. The commingled mixture thus would not comply with the 9.0 psi RVP standard, effectively prohibiting such commingling.

As discussed earlier, the EPAct 2005 and EISA2007 mandated increased volumes of renewable fuel for use in gasoline. This has resulted in the increased use of ethanol. E10 is now present in nearly all gasoline sold in the country. Recently, EPA granted a waiver from the substantially similar requirements under section 211(f)(4) for the use of E15 blends in MY2001 and newer light-duty vehicles (*See* 75 FR 68094, November 4, 2010 and 76 FR 4662, January 26, 2011). EPA interpreted section 211(h) as not extending the 1 psi waiver to such blends with ethanol levels above 10%. Several companies are also developing and planning on introducing biobutanol into commerce. The characteristics of butanol are such that it could be beneficial with respect to volatility and vehicle evaporative emission performance. For example, 2000 gallons of 10 psi E10 added to a service station tank with 8000 gallons of 9.0 psi Bu12 would result in 10000 gallons of fuel with an RVP of 9.2 psi. The RVP of the commingled blend would be the same as the average of the separate blends if they had never been commingled. There is no adverse emissions impact from the commingling of the E10 and Bu12 blends. However the 1-psi waiver would not be applicable because the resulting blend no longer contains from 9 volume percent to 10 volume percent ethanol. The RVP level for the resulting blend would also be higher than the maximum RVP standard of 9.0 psi, making the commingled blend noncomplying with the RVP standard. However the available data indicates that commingling of biobutanol blends with ethanol blends would not result in any net increase in gasoline volatility. This is because biobutanol blends and gasoline containing from 9 volume percent to 10 volume percent ethanol blend linearly from a volatility perspective, resulting in no net increase in volatility compared to what would occur without the blending. This means that there would be no net degradation in environmental performance, as indicated in Illustration V.F.–4, below.

We are inviting comment on an alternative approach to applying the RVP standard to the gasoline that results from commingling of E10 and certain other products like biobutanol. We are inviting comment as to whether the RVP standards could be applied to the commingled blend such that the commingled blend would be considered in compliance as long as the separate components of the commingled product were in compliance with the RVP standards prior to commingling. In effect the RVP standard would be applied to the commingled mixture by treating it as if it still contained two separate products, with each product required to comply with the RVP standard separately. This approach would be somewhat artificial but would allow for the commingling of specified blends of fuels, such as biobutanol, with E10 where the resulting commingled mixture does not result in a net increase in average RVP and associated emissions. This would provide more flexibility in achieving the RFS standards while avoiding adverse environmental impacts. This approach would provide a limited modification to the RVP provisions for only certain fuel blends. EPA invites comment on whether it would have the authority under § 211(h) to adopt such an approach, and if so whether it would be appropriate to do so and under what conditions.

Specifically, we would consider imposing the following conditions on such fuel blends:

(1) Each separate component must individually meet the applicable RVP standards (e.g., 10 psi for E10 and 9 psi for other blends).

(2) The resulting commingled mixture would have to have an RVP that is no higher than the weighted average of the products or components considered separately. This could occur with blends that blend linearly with respect to RVP (e.g., butanol).

(3) The burden would be on the retailer to show that these conditions had been satisfied. If a commingled product had volatility above the allowable standard, and did not have from 9 volume percent to 10 volume percent ethanol, then the fuel would be considered noncomplying unless the regulated party demonstrated that it met the limited conditions discussed here. The retailer would have to demonstrate that the conditions were met for application of this modified method of determining compliance. This would call for at least retaining records of the products received (with all required regulatory statements and indications required) and volumes of the products received in order to demonstrate a calculation to verify compliance with the RVP standard.

(4) In situations where the RVP of retail tank samples exceed 9.0/7.8 psi, for defense purposes the retailer would need to test the sample for the concentration of ethanol, butanol, and any other applicable oxygenate in addition to the RVP level in order to allow for the calculation in (3). The resulting blend ratio would need to meet or demonstrate better performance reductions of such ratio on a linear scale as established through regulation.

Under this approach, we believe there would be no adverse environmental effects because such mixtures would result in no net increase in volatility. We also believe this would enable us to give effect to the RFS provisions that call for increased use of renewable fuels, and also be consistent with our rational for the treatment of gasohol at the time we promulgated the RVP standards.

Illustration V.F.-4 – Linear Plot for Commingled E10 and Bu12 Retail Fuel Blending
Source: EPA

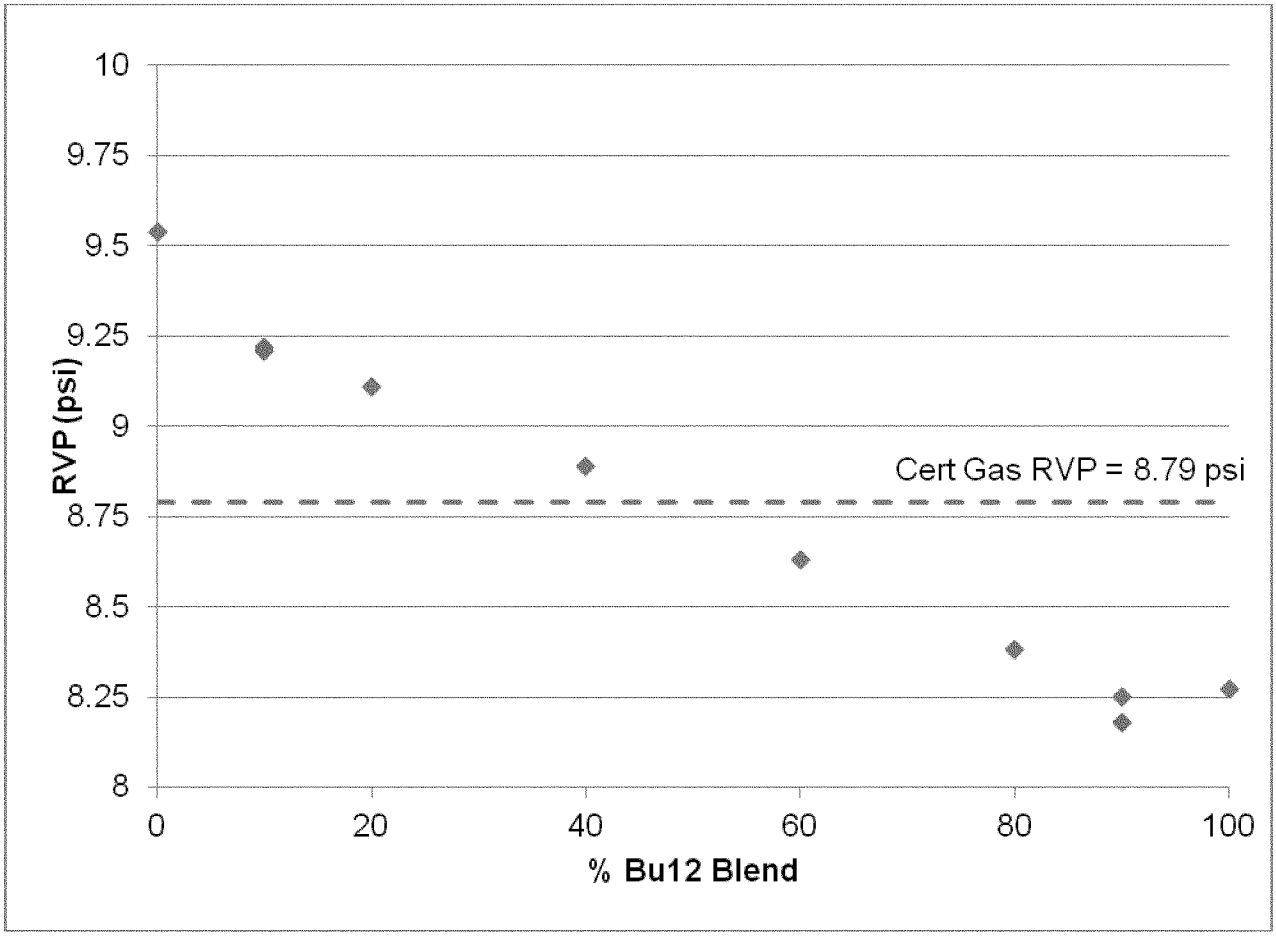

F. Amendments to Various RFS2 Compliance Related Provisions

We are proposing a number of changes to the RFS2 regulations.

1. Proposed Changes to Definitions

''Responsible Corporate Officer''

The existing RFS2 regulations at sections 80.1416, 80.1451 and 80.1454, and EPA guidance and instructions regarding registration and reporting, frequently refer to the responsibilities of the ''owner or a responsible corporate officer.'' However, the term ''responsible corporate officer'' is not currently defined in the RFS2 regulations. We propose that, for purposes of the RFS2 program, a ''responsible corporate officer'' (RCO) means a corporate officer who has the authority and is assigned responsibility to provide information to EPA on behalf of a company. A company may name only one RCO, and the RCO may not delegate his/her responsibility to any other person. However, the RCO may delegate the ability to submit information to EPA to one or more employees of the company or to one or more agents. The RCO remains responsible for the information submitted to EPA by any employee or agent. Adding a definition of RCO will codify existing practices and will assist regulated parties in understanding roles under the RFS2 regulation.

''Small Refinery''

Section 211(o)(9)(A) of the Clean Air Act provides an exemption from RFS requirements through 2010 for ''small refineries,'' defined as refineries having an average aggregate daily crude oil throughput for a calendar year that does not exceed 75,000 barrels. It also provides for possible extensions of this exemption, through individual petitions to EPA. CAA 211(o)(9)(B). In EPA's March 26, 2010 regulations implementing the EISA amendments we specified in the regulatory definition of ''small refinery'' that the 75,000 bpd threshold determination should be calculated based on information from calendar year 2006. At the beginning of the program, having a single year in which to make this determination, simplified the calculations, and helped to ensure that all refineries were treated similarly. However, we no longer believe that it is appropriate that refineries satisfying the 75,000 bpd threshold in 2006 should be eligible for extensions to their small refinery RFS exemption if they no longer meet the 75,000 bpd threshold. Allowing such facilities to qualify for an exemption extension, while not allowing similarly sized facilities that have not grown since 2006 to qualify for an exemption,

does not appear fair, nor does it further the objectives of the statute to target relief to only truly small facilities. Therefore, we propose modifying the definition of small refinery so that the crude throughput threshold of 75,000 bpd must apply in 2006 and in all subsequent years. We also propose specifying in section 80.1441(e)(2)(iii) that in order to qualify for an extension of its small refinery exemption, a refinery must meet the definition of ''small refinery'' in section 80.1401 for all full calendar years between 2006 and the date of submission of the petition for an extension of the exemption.

We proposed that that these changes would not affect any existing exemption extensions under CAA 211(o)(9)(B); rather, they would apply at such time as any approved exemption extension expires and the refinery at issue seeks a further exemption extension. No further extension would be permitted unless the revised crude oil throughput specifications were satisfied.

2. Provisions for Small Blenders of Renewable Fuels

The RFS2 regulations at section 80.1440 allow renewable fuel blenders who handle and blend less than 125,000 gallons of renewable fuel per year, and who are not obligated parties or exporters, to delegate their RIN-related responsibilities to the party directly upstream from them who supplied the renewable fuel for blending. EPA has received feedback from several parties to the effect that the 125,000 threshold is too low, and is a lower threshold than what industry considers ''small.'' EPA seeks input on what a more appropriate gallon threshold should be. EPA seeks comment on the regulated community's experience with the existing gallon threshold associated with the provisions. EPA may adjust the gallon threshold in the final rule based on further consideration of this issue and evaluation of comments received.

3. Proposed Changes to Section 80.1450—Registration Requirements

We propose to add a new paragraph (h) to section 80.1450 that will describe the circumstances under which EPA may cancel a company registration. EPA proposes to initiate a process to cancel a company registration if the company has reported no activity in the EPA Moderated Transaction System (EMTS) under section 80.1452 for one year. EPA also proposes to initiate a process to cancel a company registration if a party fails to comply with any registration requirement of section 80.1450, if the party fails to submit any required compliance report under section 80.1451, if the party fails to meet the requirements related to the EPA Moderated Transaction System (EMTS) under section 80.1452, or if the party fails to meet the requirements related to attest engagements under section 80.1454. If any required report, including the attest engagement, is thirty (30) or more days overdue, EPA would provide written notice to the owner or responsible corporate officer (RCO) that it intends to cancel the company's registration and would allow the company fourteen (14) days from the date of the letter's issuance to respond. If there is no satisfactory response received, then EPA would cancel the registration. Re-registration would be possible following the standard registration procedures.

4. Proposed Changes to Section 80.1452—EPA Moderated Transaction System (EMTS) Requirements—Alternative Reporting Method for Sell and Buy Transactions for Assigned RINs

Reporting and product transfer document (PTD) requirements, found in sections 80.1452 and 80.1453, respectively, currently state that the reportable event for a RIN purchase or sale occurs on the date of transfer. Sellers must report the sale of RINs within five (5) business days of the reportable event via the EPA Moderated Transaction System (EMTS). Buyers must report the purchase of RINs within ten (10) business days of the reportable event via EMTS. The date of transfer is the date on which title of RINs is transferred from the seller to the buyer. Some buyers and sellers of assigned RINs have expressed concerns with these requirements stating they have difficulty determining the date of transfer since title of the renewable fuel is not transferred until the fuel physically reaches the buyer. Some transactions, for example those by rail or barge, may take several weeks, and their current accounting systems do not include a means for capturing the buyer's receipt date.

EPA understands this concern, but also recognizes that some regulated parties have modified their accounting systems to address the current reporting and PTD requirements in RFS2. We also believe that for parties separating, retiring, and selling or buying separated RINs, the current reporting and PTD requirements are effective and should remain unchanged. Therefore, at this time EPA is not proposing to replace existing requirements, but is instead proposing an additional, alternative method for reporting sell and buy transactions involving assigned RINs only.

The proposed alternative method for sell and buy transactions of assigned RINs would redefine the reportable event for both the seller and the buyer, introduce a unique identifier that the seller must provide to the buyer, and require the buyer to report the date of transfer. Buyers and sellers would need to agree on which method they would be using to report transfers of assigned RINs; either the current method or the alternative method. EPA believes that this alternative would provide the regulated community with the flexibility to address their reporting concerns and also provide EPA with the data necessary to effectively administer and enforce transactions of assigned RINs. EPA welcomes comment on this proposed alternative method for reporting assigned RIN buy and sell transactions.

We propose that sellers of assigned RINs under the alternative method be required to do the following:

- Within five (5) business days of shipping renewable fuel with assigned RINs, report a sell transaction, using the alternative method, via EMTS;
- Include in the EMTS sell transaction report other required information per section 80.1452; and
- Provide a PTD to the assigned RIN buyer with a unique identifier, also reported via EMTS, in addition to the information in section 80.1453. The date of transfer is not required for the alternative method.

We propose that buyers of assigned RINs under the alternative method be required to do the following:

- Within five (5) business days of receiving a shipment of renewable fuel with assigned RINs, report a buy transaction, indicating use of the alternative method, via EMTS;
- Include in the EMTS buy transaction report other required information per section 80.1452;
- Include in the EMTS buy transaction report the unique identifier provided by the seller; and
- Include in the EMTS buy transaction report the date the renewable fuel was received, i.e. the date of transfer.

If this proposed alternative method is finalized, the EMTS would be modified to accept such transactions. EPA would provide additional instruction and guidance at the time of the new EMTS version release. EPA invites comment on all aspects of this proposal.

5. Proposed Changes to Section 80.1463—Confirm That Each Day an Invalid RIN Remains in the Marketplace Is a Separate Day of Violation

Preventing the generation and use of invalid RINs and encouraging rapid retirement and replacement of invalid RINs is crucial to the integrity of the RFS2 program. The RFS regulations include various provisions related to prohibited acts and liability for violations. Section 80.1460(a) sets forth the prohibited acts for the renewable fuels program. Section 80.1460(b)(2) prohibits parties from creating or transferring invalid RINs. Section 80.1461(a) states that the person who violates a prohibited act is liable for the violation of that prohibition. Section 80.1461(b) provides the liability provisions for failure to meet other provisions of the regulations. The penalty provisions of the regulations at section 80.1463(a) state that any person who is liable for a violation under section 80.1461 is subject to a civil penalty as specified in sections 205 and 211(d) of the Clean Air Act (CAA), for every day of each such violation and the amount of economic benefit or savings resulting from each violation. Section 80.1463(c) provides that ''any person . . . is liable for a separate day of violation for each day such a requirement remains unfulfilled.''

EPA interprets these statutory and regulatory penalty provisions to give the Agency the authority to seek penalties against parties generating, transferring or causing another person to generate or transfer invalid RINs for each day subsequent to the party's action that an invalid RIN is available for sale or use by a party subject to an obligation under the RFS2 program to acquire and retire RINs. For example, for a RIN generator, this time period typically runs from the date of invalid RIN generation until either corrective action is taken by the RIN generator to remove the invalid RIN from the marketplace or a party uses the RIN to satisfy an RVO or other requirement to retire RINs (such as would apply under today's proposal to exporters of renewable fuel or parties using fuel produced as renewable fuel for a use other than as transportation fuel, heating oil or jet fuel). This is consistent with the CAA approach of assessing penalties for every day of a violation, consistent with EPA's historic approach under the fuels regulations (*See* Section 80.615), and will encourage renewable fuel producers that generate invalid RINs to promptly take corrective action.

We are proposing to amend section 80.1463 to more explicitly incorporate EPA's interpretation of these penalty provisions into the regulations. The amendments would state that any person liable for a violation of section 80.1460(b) for creating or transferring an invalid RIN, or for causing another person to create or transfer and invalid RIN, is subject to a separate day of violation for each day that the invalid RIN remains available for use for compliance purposes, and EPA has the authority to seek the maximum statutory penalty for each day of violation. EPA will apply the statutory factors in sections 211(c) and 205(b) of the CAA to evaluate the appropriate penalties for each violation on a case by case basis.

6. Proposed Changes to Section 80.1466—Require Foreign Ethanol Producers, Importers and Foreign Renewable Fuel Producers That Sell to Importers To Be Subject to U.S. Jurisdiction and Post a Bond

The current regulations include requirements that foreign renewable fuel producers that generate RINs agree to be subject to a number of additional requirements at section § 80.1466, including, but not limited to, designation, foreign producer certification, product transfer document, load port independent testing and producer identification, submission to U.S. jurisdiction and posting of a bond. We are proposing to require the same requirements for foreign renewable fuel producers, and foreign ethanol producers that produce biofuel for which importers ultimately generate RINs, and for importers of renewable fuel.

In order to evaluate whether a fuel qualifies as RIN generating renewable fuel (including determining the proper renewable fuel category and RIN type for the imported fuel), EPA must be able to evaluate the feedstocks and processes used to produce the renewable components of the fuel. This is a particular challenge for fuel produced at foreign facilities; unlike our other fuels programs, EPA cannot determine whether a particular shipment of renewable fuel is eligible to generate RINs under the RFS program by testing the fuel itself. Furthermore, significant opportunity for fraud and non-compliance with the regulations exists where EPA is not able to ensure that RINs entering the U.S. are valid, and where enforcement of the regulations may be hampered due to a facility's foreign location. We believe that the same safeguards that apply to foreign RIN generating renewable fuel producers should apply to other foreign producers whose product is used by importers to generate RINs, and to those importers themselves. Accordingly, we propose that foreign renewable fuel producers and foreign ethanol producers who do not themselves generate RINs for their product, and importers of renewable fuel, be required to comply with the safeguards of section 80.1466. Given the challenges associated with EPA's ability to determine whether a fuel qualifies as RIN generating renewable fuel, and the potential for fraud, we believe these additional safeguards are necessary for all foreign produced renewable fuel, regardless of who generates the RINs. However, we seek comment on the reasonability of expanding these additional requirements onto foreign renewable fuel producers, and foreign ethanol producers that produce biofuel for which importers ultimately generate RINs, and for importers of renewable fuel. We further propose to amend section 80.1426(a)(4) to prohibit importers from generating RINs for renewable fuel imported from a foreign renewable fuel producer or foreign ethanol producer, unless and until the foreign renewable fuel producer or foreign ethanol producer has satisfied all requirements of section 80.1466.

7. Proposed Changes to Section 80.1466(h)—Calculation of Bond Amount for Foreign Renewable Fuel Producers, Foreign Ethanol Producers and Importers

EPA proposes two changes to section 80.1466 regarding calculation of bonds. EPA proposes to amend the procedures for calculating the bond amount for foreign renewable fuel producers, foreign ethanol producers and importers to require that the bond amount be the larger of: (1) One cent times the largest volume of renewable fuel produced by the foreign producer and exported to the United States, in gallons, during a single calendar year among the five preceding calendar years, or the largest volume of renewable fuel that the foreign producers expects to export to the Unites States during any calendar year identified in the Production Outlook Report required by section 80.1449, or (2) the sum of the following calculation for each RIN type: 0.25 times the largest volume of renewable fuel produced by the foreign producer and exported to the United States, in gallons, during a single calendar year among the five preceding calendar years, or the largest volume of renewable fuel that the foreign producers expects to export to the Unites States during any calendar year identified in the Production Outlook Report required by section 80.1449, times a ''RIN multiplier D code'' established by EPA in the regulations.

The proposed ''RIN multiplier D codes'' vary from $.02 for D code 6 to $1.30 for D code 4. When the original renewable fuels standard regulations (RFS1) were written, an RFS1 RIN was worth pennies. With the implementation of RFS2, the price of some RINs has increased significantly, in part because of the demand for certain categories of fuel such as biomass-based diesel. In order to keep up with these market conditions, the bond amount needs to be increased; a penny per gallon of fuel may no longer be a fair valuation of a foreign renewable fuel producer's potential penalty for RFS violations. Bonds are used to satisfy any judicial judgment that results from an administrative or judicial enforcement action for conduct in violation of this subpart. Therefore, we propose to amend section 80.1466(h)(1) to include the calculation described above, that reflects current market valuation for different types of RINs. We seek comment on whether the proposed bond calculation procedures are appropriate, and in particular whether they are sufficiently large to cover potential liability.

EPA also proposes to amend paragraph (h) of section 80.1466 to be consistent with paragraph (j)(4), which prohibits generating RINs in excess of the number for which the bond requirements have been satisfied. Paragraph (h) regulates the size of the bond a foreign renewable fuel producer must post in order to generate RINs. This formula takes into account the volume of renewable fuel a foreign renewable fuel producer has exported or intends to export to the United States. Section 80.1466(h) states, in part: ''If the volume of renewable fuel exported to the United States increases above the largest volume identified in the Production Outlook Report during any calendar year, the foreign producer shall increase the bond to cover the shortfall within 90 days.'' This conflicts with the stricter language in paragraph (j)(4) of the same section, which prohibits a foreign producer of renewable fuel from generating RINs in excess of the number for which the bond requirements of section 80.1466 have been satisfied. EPA interprets the stricter provision at section 80.1466(j)(4) to be controlling, and we propose to change the language in section 80.1466(h) accordingly.

8. Proposed Changes to Facility's Baseline Volume To Allow ''Nameplate Capacity'' for Facilities Not Claiming Exemption From the 20% GHG Reduction Threshold

As a requirement of registration under the RFS2 program, each renewable fuel producer and foreign ethanol producer must establish and provide documents to support its facility's baseline volume as defined in section 80.1401. This is either the permitted capacity or, if permitted capacity cannot be determined, the actual peak capacity of a specific renewable fuel production facility on a calendar year basis. After the promulgation of the March 26, 2010 RFS2 rule, we have received many requests from companies to allow them to use their nameplate or ''design'' capacity to establish their facility's baseline volume due to either the facility being exempt from obtaining a permit, and thus not able to determine their permitted capacity, or the facility not starting operations, or not being operational for a full calendar year to produce actual production records to establish actual peak capacities. Because the regulations currently only allow a facility's baseline volume to be established by a limit stated in a permit or actual production records for at least one calendar year, facilities that had neither a permit or sufficient production records had difficulty registering under the RFS2 program. To allow facilities that fall under this predication to register under the RFS2 program, we are proposing in this rulemaking to allow a facility to use its ''nameplate capacity'' to establish its facility's baseline volume for the purposes of registration, only if (1) the facility does not have a permit or there is no limit stated in the permit to establish their permitted capacity, and (2) has not started operations or does not have at least one calendar year of production records, and (3) does not claim exemption from the 20 percent GHG threshold under § 80.1403. Due to the complexity of the exemption provision provided under § 80.1403, and the added flexibility that facilities claiming this exemption are allotted under the program, we are not proposing to extend this option to facilities claiming an exemption under § 80.1403. Additionally, by this stage in the RFS2 program, the facilities that would qualify for registration under § 80.1403 would be very few, if any. This proposal would revise the definition of baseline volume to include ''nameplate capacity,'' add a new definition for ''nameplate capacity'' to § 80.1401, and include conforming amendments to the registration requirements of § 80.1450.

G. Minor Corrections to RFS2 Provisions

We are proposing a number of corrections to address minor definitional issues that have been identified as we have been implementing the RFS2 program.

Renewable Biomass

We propose to amend the definition of ''renewable biomass'' in section 80.1401 to make clear that biomass obtained in the vicinity of buildings means biomass obtained within 200 feet of the buildings. The preamble for the March 26, 2010 RFS2 final rule cites the distance of 200 feet (*see* 75 FR 14696), but EPA did not include a reference to this value in the regulations. We believe doing so would provide additional clarity to the regulations.

English Language Translations

We propose to add a new paragraph (i) to section 80.1450 to state that any registration materials submitted to EPA must be in English or accompanied by an English language translation. Similarly, we propose to add a new paragraph (h) to section 80.1451 that will state that any reports submitted to EPA must be in English or accompanied by an English language translation and add a new paragraph (q) to section 80.1454 that will state that any records submitted to EPA must be in English or accompanied by an English language translation. The translation and all other associated documents must be maintained by the submitting company for a period of five (5) years, which is already the established time period for keeping records under the existing RFS2 program.

Correction of Typographical Errors

We propose to correct various typographical errors in section 80.1466. Specifically, we propose to amend paragraph (o) to correct a typographical error in the last sentence of the affirmation statement, by changing the citation from § 80.1465 to § 80.1466. We also propose to amend paragraph (d)(3)(ii) to correct a typographical error. The current regulation cites section 80.65(e)(2)(iii), which does not exist. The correct citation is to section 80.65(f)(2)(iii).

VI. Amendments to the E15 Misfueling Mitigation Rule

We propose the following minor corrections and other changes to the E15 misfueling mitigation rule (E15 MMR) found at 40 CFR Part 80, subpart N.

A. Proposed Changes to Section 80.1501—Label

We propose to correct several minor errors in the description of the E15 label required by the E15 MMR at section 80.1501, including corrections in the dimensions of the label and ensuring that the word ''ATTENTION'' is capitalized. The Agency intended the label required by the regulations to look

identical to that pictured in the **Federal Register** notice for the final E15 MMR (*see* 76 FR 44406, 44418, July 25, 2011).

B. Proposed Changes to Section 80.1502—E15 Survey

We are proposing two changes to the survey requirements found at section 80.1502. First, we propose to clarify that E15 surveys need to sample for Reid vapor pressure (RVP) only during the high ozone season as defined in section 80.27(a)(2)(ii) or during any time RVP standards apply in any state implementation plan approved or promulgated under the Clean Air Act. EPA did not intend to require RVP sampling and testing during the rest of the year, when RVP standards do not apply.

Second, we propose to change when the results of surveys that detect potential noncompliance must be reported to the Agency. As originally drafted, the regulations require the independent survey association conducting a survey to notify EPA of potentially noncompliant samples within 24 hours of the laboratory receiving this sample (*see* 76 FR at 44423, July 25, 2011). EPA has since learned that more time may be needed for reporting of noncompliant samples since it may take several days for analysis of the sample to be completed. We are therefore requiring that noncompliant samples be reported to EPA within 24 hours of being analyzed.

C. Proposed Changes to Section 80.1503—Product Transfer Documents

EPA is proposing certain minor changes to the product transfer document (PTD) requirements found at section 80.1503. Specifically, we are proposing to allow the use of product codes for conventional blendstock/gasoline upstream of an ethanol blending facility, since historically, the codes have been allowed to be used for conventional blendstock/gasoline upstream of an ethanol blending facility in other fuels programs. This was an omission from the original regulation.

We are also seeking comment on potential ways of streamlining the PTD language required at section 80.1503.

D. Proposed Changes to Section 80.1504—Prohibited Acts

EPA is slightly rewording section 80.1504(g) to state that blending E10 that has taken advantage of the statutory 1.0 psi RVP waiver during the summertime RVP control period with a gasoline-ethanol fuel that cannot take advantage of the 1.0 psi RVP waiver (i.e., a fuel that contains more than 10.0 volume percent ethanol (e.g., E15) or less than 9 volume percent ethanol) would be a violation of the E15 MMR. As originally written, the language does not clearly describe the prohibited activity (*see* 76 FR 44435, 44436, Jult 25, 2011).

E. Proposed Changes to Section 80.1500—Definitions

On August 17, 2011, the National Petroleum Refiners Association, now called American Fuel and Petrochemical Manufacturers (AFPM), filed a petition for reconsideration with the Agency under CAA section 307(d)(7)(B) asking EPA to reconsider certain portions of the E15 MMR. A copy of the petition has been placed in the docket. The petition fundamentally focuses on one issue—AFPM expressed concern that the Agency had defined E10 and E15 in the E15 MMR in a way that would change how ethanol concentrations are determined for regulatory purposes. Today we grant AFPM's request for reconsideration of this issue as explained in their August 17, 2011 petition. As explained below, while EPA did not intend the definitions of E10 and E15 in the E15 MMR to have this effect, we are proposing changes to the regulations to avoid this perceived impact.

On April 6, 1979, fuel containing 90% unleaded gasoline and 10% ethyl alcohol received a waiver under section 211(f)(4) by operation of law (see 44 FR 20777, April 6, 1979). Later, EPA issued an interpretative ruling that stated the April 6, 1979 waiver covered gasoline-ethanol blends that contained *up to* 10 vol% ethanol content (see 47 FR 14596, April 5, 1982). Finally, in the context of regulations limiting the Reid vapor pressure (RVP) of gasoline, EPA has defined E10 as gasoline containing between 9 and 10 volume percent ethanol. Under the RVP regulations and the Clean Air Act, the RVP of E10 is allowed to be 1 pound per square inch (psi) higher than it is for gasoline or gasoline-ethanol blends containing less than 9 and more than 10 vol% ethanol (often referred to as the ''1.0 psi waiver'').

In the E15 MMR, EPA defined E10 as gasoline containing at least 9.0 and no more than 10.0 vol% ethanol and defined E15 as a gasoline-ethanol blend containing greater than 10.0 and no more than 15.0 vol% ethanol. EPA included those definitions in the E15 MMR so that fuels blended to contain more than 10.0 vol% ethanol were subject to the misfueling mitigation requirements for E15. After publication of the E15 MMR, stakeholders including AFPM expressed concern that by defining E10 as E10.0, the Agency may have effectively made the ethanol concentration limits specified in the E10 and the E15 waiver decisions and the RVP regulations more stringent, which in turn would impact whether a party must comply with the E15 MMR requirements and whether a fuel qualifies for the RVP 1.0 psi waiver.

In its petition, AFPM noted that under existing EPA regulations at 40 CFR 80.9, the results of compliance testing for the ethanol concentration in gasoline are ''rounded down'' when the results indicate that gasoline-ethanol fuel may contain slightly more than 10 vol% ethanol. AFPM further stated that in view of this rounding procedure, fuel that compliance testing indicates has an ethanol concentration of between 10.0 and 10.4 should be considered E10. AFPM argued that the E15 MMR definition of E10 as containing no more than 10.0 vol% ethanol constituted a ''substantive change'' to the proposed E15 MMR that would also alter the implementation of other EPA fuels regulations without a required rulemaking.

As part of the E15 MMR proposed rule, we identified prospective responsible parties for each misfueling mitigation measure, including requirements related to labeling E15 fuel dispensers, compliance surveys, and product transfer documents. We received a number of comments from many affected stakeholders, including AFPM, that asked us to clarify which party or parties would be responsible for each misfueling mitigation measure and when each party or parties would be subject to those requirements. In the final E15 MMR, we added the significant digit to the definitions of E10 and E15 in order to provide a delineation between E10 and E15 and consequently the parties subject to one or more of the E15 misfueling mitigation measures.

AFPM argued in their petition that by defining E10 as containing no more than 10.0 vol% ethanol, EPA effectively made a substantive change to the way test results used for determining compliance with fuel requirements are rounded. For example, for a gasoline-ethanol blend to be considered E10, it could no longer contain up to 10.4 vol% ethanol; it could only contain up to 10.04 vol% ethanol. AFPM asserted that there is a tolerance for blending ethanol that allows blends containing up to 10.4 vol% ethanol to be considered E10. While we do not agree that there is a blending tolerance for ethanol, we agree that test results are rounded utilizing the procedures identified in section 80.9 when compared to applicable standards, in this case the ethanol concentrations

specified in the E10 and the E15 waivers.

The Agency specifically addressed the issue of blending tolerances versus testing tolerances for gasoline-ethanol blends in the RFS2 NPRM.[50] At the time, some stakeholders had suggested that the implementation of a blending tolerance for the ethanol content of gasoline could be allowed to help obligated parties satisfy RFS requirements without the need for a CAA section 211(f)(4) waiver. In response, we argued that although the test methods used to measure ethanol concentration (ASTM D 5599 and ASTM D 4815) include some variability, ethanol is different than other fuel properties and components that are controlled in other fuel programs.[51] Fuel properties such as RVP, and components such as sulfur and benzene, are natural characteristics of gasoline as a result of the chemical nature of crude oil and the refining process. Their levels or concentrations in gasoline are unknown until measured and are dependent upon the accuracy of the test method. In contrast, ethanol is intentionally added in known amounts using equipment designed to ensure a specific concentration within a very narrow range. Parties that blend ethanol into gasoline normally have precise control over the final concentration. Therefore, a blending tolerance for ethanol would not be appropriate. During the comment period for the RFS2 NPRM, EPA received a number of comments from stakeholders that argued that the volume percentage of ethanol in gasoline is readily determined using very accurate volumetric ratio blending facilities now in place at most blending terminals; therefore, the Agency should not allow a blending tolerance. In the final RFS rule, we did not include a blending tolerance for ethanol blends.[52]

We continue to believe that blending tolerances for ethanol are not appropriate, and the definitions of E10 and E15 in the E15 MMR are consistent with this view. The E10 waiver is for gasoline containing ''up to'' 10 vol% ethanol, not for gasoline containing ''up to'' 10.4 vol% ethanol, and the E15 partial waivers are for fuel designed to contain ''greater than 10 vol% ethanol and not more than 15 vol% ethanol.'' In the case of both waivers, the ''10'' and the ''15'' are exact numbers, not approximations, and they express how much ethanol can be lawfully added to fuel. Testing by the Department of Energy utilized in making the E15 partial waiver decisions was blended as precisely as possible to contain the relevant percentage of ethanol, not that percentage plus ''0.49.'' Testing for registration of E10 and E15 fuel and fuel additives under 40 CFR part 79 was also done with fuels blended as precisely as possible to contain the relevant percentage of ethanol. Similarly, EPA regulations provide that only fuel with an ethanol concentration of between 9 and 10 vol%, not more or less, may lawfully use the statutory 1.0 psi RVP waiver.

At the same time, we did not intend to change the definition of E10 in a way that impacts the rounding of test results for ethanol concentrations.[53] If a manufacturer blends in a way designed to result in a gasoline-ethanol fuel containing no more than 10.0 vol% ethanol, but compliance testing indicates a concentration of 10.4 vol%, we will still round down the test result in accordance with procedures in section 80.9. The purpose of the E15 MMR definitions state that if a manufacturer blends ethanol into gasoline in a way *designed* to *result* in a gasoline-ethanol fuel containing greater than 10.0 vol% and no more than 15.0 vol% ethanol, it will be subject to applicable E15 MMR requirements. For example, bills of lading for an E10 fuel manufacturer that indicates the manufacturer has purchased and blended more ethanol than 10.0 vol% ethanol may indicate that a fuel does not meet the definition of E10 for E15 MMR purposes.

AFPM also argued that the E15 MMR definitions of E10 would alter the implementation of other EPA fuels regulations without a required rulemaking, specifically the application of the 1.0 psi RVP waiver to E10. Since the Agency intended the E15 MMR definition of E10 to only apply for purposes of determining the applicability of E15 MMR requirements, the Agency does not believe these definitions affect the implementation and enforcement of others fuels programs, including the applicability of the 1.0 psi RVP waiver. The introductory language to the definitions at 40 CFR part 80, subpart N clearly states that definitions in section 80.1500 are ''[f]or purposes of this subpart only.''

In order to clarify that these definitions only apply in the context of the E15 MMR, EPA is proposing to add a new section 80.1509, which contains language that clearly states that when ethanol concentrations are measured for compliance testing purposes for 40 CFR, Part 80, Subpart N, the applicable ethanol concentration value will be rounded using the rounding procedures at section 80.9. EPA is also proposing new prohibited acts language in section 80.1504 that should make it clear that only those parties that (1) produce gasoline, blendstocks for oxygenate blending (BOBs), or ethanol designed to be used in the manufacture of E15 as currently defined (i.e., E15.0); (2) that manufacture E15 to be introduced into commerce; or (3) that dispense E15 from a retail outlet. The Agency specifically seeks comments on this proposed language.

VII. Proposed Amendments to the ULSD Diesel Sulfur Survey

EPA is requesting comment concerning whether to amend a provision of the ultra-low sulfur diesel (ULSD) rule. The ULSD rule includes a provision that deems branded refiners liable for violations of the ULSD sulfur standard that are found at retail outlets displaying the refiner's brand (40 CFR 80.612). The regulations include defense provisions. One element of a branded refiner's defense to such violations is that it must have a periodic sampling and testing program at the retail level (40 CFR 80.613(b) and (d)). The regulations also set forth an alternative sampling and testing defense element provision for branded refiners.

This alternative defense element provision (40 CFR 80.613(e)) allows a branded refiner to meet the company-specific downstream periodic sampling and testing element of its defense by participating in funding a survey consortium that samples diesel fuel at retail outlets nationwide. This sampling and testing of fuel to determine compliance with the ULSD sulfur standard is carried out by an independent survey association. EPA reviews and approves the annual survey plan submitted by the survey association. The number of samples that are taken each year is determined by a statistical formula that is based in part on the previous year's compliance rate. In addition, the regulations set a floor and a ceiling for the number of samples that must be taken in an annual survey cycle regardless of the sample number that would be calculated using the regulatory formula. Therefore, the number of samples required to be taken can potentially be less than the formula would require, or it can be more.

Compliance with the ULSD sulfur content standard has been extremely high; less than 1% of the samples have been in violation in recent years. The

[50] *See* 74 FR 25018 (May 26, 2009).

[51] *See* 74 FR 25018 (May 26, 2009).

[52] *See* 75 FR 14762–14764 (March 26, 2010).

[53] For an explanation of the rounding procedures outlined in § 80.9 and the rationale the Agency used to adopt those procedures, *see* 71 FR 16496 (April 3, 2006).

minimum number of samples currently required to be taken annually is set by the regulation at 5,250 regardless of this high compliance rate. Due to the high compliance rate, use of the statistical formula would result in a sampling rate of several hundred samples for each of the past several years, instead of 5,250 samples. The cost difference between taking several hundred samples versus taking over 5,000 samples is significant. For these reasons we believe the continued high compliance rate, and the substantial discrepancy between the sampling rate calculated by the formula and the minimum sampling rate, argue for lowering the minimum sampling rate. However, we believe there is a point where the number of samples per year would be so few that the survey would be meaningless relative to robust sampling and testing programs conducted by each refiner individually. Balancing these concerns, we believe minimum sampling rate of about 1,800 samples is appropriate. We are requesting comment on reducing the minimum number of samples to some rate below 2,000 samples.

VIII. Statutory and Executive Order Reviews

A. Executive Order 12866: Regulatory Planning and Review

Under Executive Order 12866 (58 FR 51735, October 4, 1993), this action is a ''significant regulatory action'' because it raises novel legal or policy issues. Accordingly, EPA submitted this action to the Office of Management and Budget (OMB) for review under Executive Orders 12866 and 13563 (76 FR 3821, January 21, 2011) and any changes made in response to OMB recommendations have been documented in the docket for this action.

B. Paperwork Reduction Act

The information collection requirements in this notice of proposed rulemaking have been submitted for approval to the Office of Management and Budget (OMB) under the Paperwork Reduction Act, 44 U.S.C. 3501 *et seq.* The Information Collection Request (ICR) document prepared by EPA related to this proposal has been assigned EPA ICR number 2469.01. A supporting statement for the proposed ICR has been placed in the docket. The proposed information collection is described in the following paragraphs.

This action contains recordkeeping and reporting that may affect the following parties under the RFS2 regulation: RIN generators (producers, importers), obligated parties (refiners), exporters, and parties who own or transact RINs. We estimate that 670 parties may be subject to the proposed information collection. We estimate an annual recordkeeping and reporting burden of 3.1 hours per respondent. This action contains recordkeeping and reporting that may affect the following parties under the E15 regulation: gasoline refiners, gasoline and ethanol importers, gasoline and ethanol blenders (including terminals and carriers). We estimate that 2,000 respondents may be subject to the proposed information collection. We estimate an annual recordkeeping and reporting burden of 1.3 hours per respondent. Burden means the total time, effort, or financial resources expended by persons to generate, maintain, retain, or disclose or provide information to or for a Federal agency. This includes the time needed to review the instructions; develop, acquire, install, and utilize technology and systems for the purpose of collecting, validating, and verifying information, processing and maintaining information, and disclosing and providing information; adjust the existing ways to comply with any previously applicable instructions and requirements; train personnel to be able to respond to a collection of information; search data sources; complete and review the collection of information; and transit or otherwise disclose the information. Burden is as defined at 5 CFR 1320.3(b).

An agency may not conduct or sponsor, and a person is not required to respond to, a collection of information unless it displays a currently valid OMB control number. The OMB control numbers for EPA's regulations in 40 CFR are listed in 40 CFR Part 9.

To comment on the Agency's need for this information, the accuracy of the provided burden estimates, and any suggested methods for minimizing respondent burden, EPA has established a public docket for this proposed rule, which includes the ICR described above, under Docket ID number EPA–HQ–OAR–2012–0401. Submit any comments related to the ICR to EPA and OMB. See the **ADDRESSES** section at the beginning of this notice for where to submit comments to EPA. Send comments to OMB at the Office of Information and Regulatory Affairs, Office of Management and Budget, 725 17th Street NW., Washington, DC 20503, Attention: Desk Office for EPA. Since OMB is required to make a decision concerning the ICR between 30 and 60 days after June 14, 2013, a comment to OMB is best assured of having its full effect if OMB receives it by July 15, 2013.

C. Regulatory Flexibility Act

The Regulatory Flexibility Act (RFA) generally requires an agency to prepare a regulatory flexibility analysis of any rule subject to notice and comment rulemaking requirements under the Administrative Procedure Act or any other statute unless the agency certifies that the rule will not have a significant economic impact on a substantial number of small entities. Small entities include small businesses, small organizations, and small governmental jurisdictions.

For purposes of assessing the impacts of today's rule on small entities, small entity is defined as: (1) A small business as defined by the Small Business Administration's (SBA) regulations at 13 CFR 121.201; (2) a small governmental jurisdiction that is a government of a city, county, town, school district or special district with a population of less than 50,000; and (3) a small organization that is any not-for-profit enterprise which is independently owned and operated and is not dominant in its field.

After considering the economic impacts of this action on small entities, I certify that this action will not have a significant economic impact on a substantial number of small entities. The amendments to the RFS2 provisions in this direct final rule will not impose any requirements on small entities that were not already considered under the final RFS2 regulations, as it makes relatively minor corrections and modifications to those regulations. We continue to be interested in the potential impacts of the proposed rule on small entities and welcome comments on issues related to such impacts.

D. Unfunded Mandates Reform Act

This rule does not contain a Federal mandate that may result in expenditures of $100 million or more for State, local, and tribal governments, in the aggregate, or the private sector in any one year. We have determined that this action will not result in expenditures of $100 million or more for the above parties and thus, this rule is not subject to the requirements of sections 202 or 205 of UMRA.

This rule is also not subject to the requirements of section 203 of UMRA because it contains no regulatory requirements that might significantly or uniquely affect small governments. It only applies to gasoline, diesel, and renewable fuel producers, importers, distributors and marketers and makes relatively minor corrections and

modifications to the RFS2 and diesel regulations.

E. Executive Order 13132 (Federalism)

This action does not have federalism implications. It will not have substantial direct effects on the States, on the relationship between the national government and the States, or on the distribution of power and responsibilities among the various levels of government, as specified in Executive Order 13132. This action only applies to gasoline, diesel, and renewable fuel producers, importers, distributors and marketers and makes relatively minor corrections and modifications to the RFS2 and diesel regulations. Thus, Executive Order 13132 does not apply to this action. In the spirit of Executive Order 13132, and consistent with EPA policy to promote communications between EPA and State and local governments, EPA specifically solicits comment on this proposed action from State and local officials.

F. Executive Order 13175 (Consultation and Coordination With Indian Tribal Governments)

This proposed rule does not have tribal implications, as specified in Executive Order 13175 (65 FR 67249, November 9, 2000). It applies to gasoline, diesel, and renewable fuel producers, importers, distributors and marketers. This action makes relatively minor corrections and modifications to the RFS and diesel regulations, and does not impose any enforceable duties on communities of Indian tribal governments. Thus, Executive Order 13175 does not apply to this action. EPA specifically solicits additional comment on this proposed action from tribal officials.

G. Executive Order 13045: Protection of Children From Environmental Health Risks and Safety Risks

EPA interprets EO 13045 (62 FR 19885, April 23, 1997) as applying only to those regulatory actions that concern health or safety risks, such that the analysis required under section 5–501 of the EO has the potential to influence the regulation. This action is not subject to EO 13045 because it does not establish an environmental standard intended to mitigate health or safety risks.

H. Executive Order 13211: Actions Concerning Regulations That Significantly Affect Energy Supply, Distribution, or Use

This action is not a ''significant energy action'' as defined in Executive Order 13211 (66 FR 28355, (May 22, 2001)), because it is not likely to have a significant adverse effect on the supply, distribution, or use of energy. This action amends existing regulations related to renewable fuel, E15, and ultra-lower sulfur diesel. We have concluded that this rule is not likely to have any adverse energy effects. In fact, we expect this proposed rule may result in positive effects, because many of the changes we are proposing will facilitate the introduction of new renewable fuels under the RFS2 program and have come at the suggestion of industry stakeholders.

I. National Technology Transfer and Advancement Act

Section 12(d) of the National Technology Transfer and Advancement Act of 1995 (''NTTAA''), Public Law 104–113, 12(d) (15 U.S.C. 272 note) directs EPA to use voluntary consensus standards in its regulatory activities unless to do so would be inconsistent with applicable law or otherwise impractical. Voluntary consensus standards are technical standards (e.g., materials specifications, test methods, sampling procedures, and business practices) that are developed or adopted by voluntary consensus standards bodies. NTTAA directs EPA to provide Congress, through OMB, explanations when the Agency decides not to use available and applicable voluntary consensus standards.

This action does not involve technical standards. Therefore, EPA did not consider the use of any voluntary consensus standards. EPA welcomes comments on this aspect of the proposed rulemaking and, specifically, invites the public to identify potentially-applicable voluntary consensus standards and to explain why such standards should be used in this regulation.

J. Executive Order 12898: Federal Actions To Address Environmental Justice in Minority Populations and Low-Income Populations

Executive Order (EO) 12898 (59 FR 7629 (Feb. 16, 1994)) establishes federal executive policy on environmental justice. Its main provision directs federal agencies, to the greatest extent practicable and permitted by law, to make environmental justice part of their mission by identifying and addressing, as appropriate, disproportionately high and adverse human health or environmental effects of their programs, policies, and activities on minority populations and low-income populations in the United States.

EPA has determined that this proposed rule will not have disproportionately high and adverse human health or environmental effects on minority or low-income populations because it does not affect the level of protection provided to human health or the environment. These technical amendments do not relax the control measures on sources regulated by the RFS regulations and therefore will not cause emissions increases from these sources.

K. Clean Air Act Section 307(d)

This rule is subject to Section 307(d) of the CAA. Section 307(d)(7)(B) provides that ''[o]nly an objection to a rule or procedure which was raised with reasonable specificity during the period for public comment (including any public hearing) may be raised during judicial review.'' This section also provides a mechanism for the EPA to convene a proceeding for reconsideration, ''[i]f the person raising an objection can demonstrate to the EPA that it was impracticable to raise such objection within [the period for public comment] or if the grounds for such objection arose after the period for public comment (but within the time specified for judicial review) and if such objection is of central relevance to the outcome of the rule.'' Any person seeking to make such a demonstration to the EPA should submit a Petition for Reconsideration to the Office of the Administrator, U.S. EPA, Room 3000, Ariel Rios Building, 1200 Pennsylvania Ave. NW., Washington, DC 20460, with a copy to both the person(s) listed in the preceding **FOR FURTHER INFORMATION CONTACT** section, and the Director of the Air and Radiation Law Office, Office of General Counsel (Mail Code 2344A), U.S. EPA, 1200 Pennsylvania Ave. NW., Washington, DC 20460.

List of Subjects in 40 CFR Part 80

Environmental protection, Administrative practice and procedure, Agriculture, Air pollution control, Confidential business information, Energy, Forest and Forest Products, Fuel additives, Gasoline, Imports, Motor vehicle pollution, Penalties, Petroleum, Reporting and recordkeeping requirements.

Dated: May 20, 2013.

Bob Perciasepe,

Acting Administrator.

For the reasons stated in the preamble, the Environmental Protection Agency proposes to amend 40 CFR chapter I as set forth below:

PART 80—REGULATION OF FUELS AND FUEL ADDITIVES

■ 1. The authority citation for part 80 continues to read as follows:

Authority: 42 U.S.C. 7414, 7521, 7542, 7545 and 7601(a).

■ 2. Section 80.613 is amended by revising paragraph (e)(4)(v)(A) definition ''n'' as follows:

§ 80.613 What defenses apply to persons deemed liable for a violation of a prohibited act under this subpart?

* * * * *

(e) * * *

(4) * * *

(v) * * *

(A) * * *

Where:

n= minimum number of samples in a year-long survey series. However, in no case shall *n* be larger than 9,600 nor smaller than 1,800.

* * * * *

■ 3. Section 80.1401 is amended by adding the definitions of ''Nameplate capacity'', ''Renewable compressed natural gas'', ''Renewable fuel producer'', ''Renewable liquefied natural gas'', ''Responsible corporate officer'', in alphabetical order and revising the definitions of ''Biogas'', ''Crop residue'', ''Naphtha'', ''Renewable biomass'', and ''Small refinery'' in to read as follows:

§ 80.1401 Definitions.

* * * * *

Biogas means a mixture of hydrocarbons that is a gas at 60 degrees Fahrenheit and 1 atmosphere of pressure that is produced through the conversion of organic matter. Biogas includes landfill gas, gas from waste digesters, and gas from waste treatment plants. Waste digesters include digesters processing animal wastes, biogenic waste oils/fats/greases, separated food and yard wastes, and crop residues, and waste treatment plants include wastewater treatment plants and publicly owned treatment works.

* * * * *

Crop residue is the biomass left over from the harvesting or processing of planted crops from existing agricultural land and any biomass removed from existing agricultural land that facilitates crop management (including biomass removed from such lands in relation to invasive species control or fire management), whether or not the biomass includes any portion of a crop or crop plant. Biomass is considered crop residue only if the use of that biomass for the production of renewable fuel has no significant impact on demand for the feedstock crop, products produced from that feedstock crop, and all substitutes for the crop and its products, nor any other impact that would result in a significant increase in direct or indirect GHG emissions.

* * * * *

Nameplate capacity means the peak design capacity of a facility for the purposes of registration of a facility under § 80.1450(b)(1)(V)(E).

Naphtha means a blendstock or fuel blending component falling within the boiling range of gasoline which is composed of only hydrocarbons, is commonly or commercially known as naphtha and is used to produce gasoline through blending.

* * * * *

Renewable biomass means each of the following (including any incidental, de minimis contaminants that are impractical to remove and are related to customary feedstock production and transport):

(1) Planted crops and crop residue harvested from existing agricultural land cleared or cultivated prior to December 19, 2007 and that was nonforested and either actively managed or fallow on December 19, 2007.

(2) Planted trees and tree residue from a tree plantation located on non-federal land (including land belonging to an Indian tribe or an Indian individual that is held in trust by the U.S. or subject to a restriction against alienation imposed by the U.S.) that was cleared at any time prior to December 19, 2007 and actively managed on December 19, 2007.

(3) Animal waste material and animal byproducts.

(4) Slash and pre-commercial thinnings from non-federal forestland (including forestland belonging to an Indian tribe or an Indian individual, that are held in trust by the United States or subject to a restriction against alienation imposed by the United States) that is not ecologically sensitive forestland.

(5) Biomass (organic matter that is available on a renewable or recurring basis) obtained from the immediate vicinity (i.e., obtained within 200 feet) of buildings and other areas regularly occupied by people, or of public infrastructure, in an area at risk of wildfire.

(6) Algae.

(7) Separated yard waste or food waste, including recycled cooking and trap grease, and materials described in § 80.1426(f)(5)(i).

Renewable compressed natural gas means biogas as defined in this section, that is processed to the standards of pipeline natural gas as defined in 40 CFR 72.2 and that is compressed to pressures up to 3600 psi. Only renewable CNG that qualifies as renewable fuel and is used for transportation purposes can generate RINs.

* * * * *

Renewable fuel producer means a person who operates or directly supervises the operation of a facility where renewable fuel is produced.

* * * * *

Renewable liquefied natural gas means biogas as defined in this section, that is processed to the standards of pipeline natural gas as defined in 40 CFR 72.2 and that goes through the process of liquefaction in which the biogas is cooled below its boiling point and weighs less than half the weight of water so it will float if spilled on water. Only renewable LNG that qualifies as renewable fuel and is used for transportation fuel can generate RINs.

Responsible Corporate Officer, or *RCO,* for this subpart only, means a corporate officer who has the authority and is assigned responsibility to provide information to EPA on behalf of a company. A company may name only one Responsible Corporate Officer. A Responsible Corporate Officer may not delegate his or her responsibility to any other person. The Responsible Corporate Officer may delegate the ability to submit information to EPA, but the Responsible Corporate Officer remains responsible for the actions of such employees or agents.

* * * * *

Small Refinery, for this subpart only, means a refinery for which the average aggregate daily crude oil throughput for calendar year 2006 and subsequent years (as determined by dividing the aggregate throughput for the calendar year by the number of days in the calendar year) does not exceed 75,000 barrels.

■ 4. Section 80.1415 is amended by revising paragraphs (b)(5) and (c)(1) to read as follows:

§ 80.1415 How are equivalence values assigned to renewable fuel?

(b) * * *

(5) 77,000 Btu (lower heating value) of compressed natural gas (CNG) or liquefied natural gas (LNG) shall represent one gallon of renewable fuel with an equivalence value of 1.0.

(c) * * *

(1) The equivalence value for renewable fuels described in paragraph (b)(7) of this section shall be calculated using the following formula:

$$EV = (R/0.972) * (EC/77{,}000)$$

Where:

EV = Equivalence Value for the renewable fuel, rounded to the nearest tenth.
R = Renewable content of the renewable fuel. Except as provided in § 80.1426(f)(4)(iii), this is a measure of the portion of a renewable fuel that came from renewable biomass, expressed as a fraction, on an energy basis.
EC = Energy content of the renewable fuel, in Btu per gallon (lower heating value).

■ 5. Section 80.1426 is amended by:
■ a. Revising Table 1 of paragraph (f)(1) by:
■ 1. Revising the entry for ''Q''; and
■ 2. Adding new entries for T through AA to the end of the table;
■ b. Revising paragraphs (f)(10) and f(11); and
■ c. Adding paragraph (f)(14).

The revisions and additions read as follows:

§ 80.1426 How are RINs generated and assigned to batches of renewable fuel by renewable fuel producers or importers?

(f) * * *

(1) * * *

TABLE 1 TO § 80.1426—APPLICABLE D CODES FOR EACH FUEL PATHWAY FOR USE IN GENERATING RINS

	Fuel type	Feedstock	Production process requirements	D-Code
*	*	*	*	*
Q	Renewable Compressed Natural Gas, Renewable Liquefied Natural Gas.	Biogas from waste treatment plants and waste digesters.	Any	5
*	*	*	*	*
T	Butanol	Corn starch	Fermentation; dry mill using natural gas and biogas from on-site thin stillage anaerobic digester for process energy w/CHP producing excess electricity of at least 40% of the purchased natural gas energy used by the facility.	5
U	Renewable Compressed Natural Gas, Renewable Liquefied Natural Gas.	Biogas from Landfills	Any	3
V	Renewable Electricity	Biogas from landfills	Any	3
W	Cellulosic Naphtha	Biogas from landfills	Fischer-Tropsch process; Facilities must produce at least 20% of their electricity usage at the facility.	3
X	Cellulosic Diesel for use as conventional diesel fuel.	Biogas from landfills	Fischer-Tropsch process; Facilities must produce at least 20% of their electricity usage at the facility.	7
Y	Naphtha	Biogas from landfills	Fischer-Tropsch process	5
Z	Renewable Diesel for use as conventional diesel fuel.	Biogas from landfills	Fischer-Tropsch process; Excluding processes that co-process renewable biomass and petroleum.	4
AA	Renewable Diesel for use as conventional diesel fuel.	Biogas from landfills	Fischer-Tropsch process; Includes only processes that co-process renewable biomass and petroleum.	5

* * * * *

(10)(i) For purposes of this section, renewable electricity that is not introduced into a distribution system with electricity derived from non-renewable feedstocks is considered renewable fuel and the producer may generate RINs if all of the following apply:

(A) The electricity is produced from renewable biomass and qualifies for a D code in Table 1 to this section or has received approval for use of a D code by the Administrator;

(B) The fuel producer has entered into a written contract for the sale of a specific quantity of renewable electricity as transportation fuel; and

(C) The renewable electricity is used as a transportation fuel.

(ii) For purposes of this section, fuels produced from biogas that is not introduced into a distribution system with gas derived from non-renewable feedstocks is considered renewable fuel and the producer may generate RINs if all of the following apply:

(A) The fuel is produced from renewable biomass and qualifies for a D code in Table 1 to this section or has received approval for use of a D code by the Administrator;

(B) The fuel producer has entered into a written contract for the sale of a specific quantity of biogas to be used as a feedstock for transportation fuel; and

(C) The fuel produced from the biogas is used as a transportation fuel.

(iii) A producer of renewable electricity that is generated by co-firing a combination of renewable biomass and fossil fuel may generate RINs only for the portion attributable to the renewable biomass, using the procedure described in paragraph (f)(4) of this section.

(11)(i) For purposes of this section, renewable electricity that is introduced into a commercial distribution system (transmission grid) may be considered renewable fuel and the producer may generate RINs if:

(A) The electricity is produced from renewable biomass and qualifies for a D code in Table 1 of this section or has received approval for use of a D code by the Administrator;

(B) The fuel producer has entered into a written contract for the sale of a specific quantity of electricity derived from renewable biomass sources with a party that uses electricity taken from a commercial distribution system for use as a transportation fuel, and such electricity has been introduced into that commercial distribution system (transmission grid);

(C) The quantity of renewable electricity for which RINs were generated was sold for use as transportation fuel and for no other purposes; and

(D) The renewable electricity was loaded onto and withdrawn from a physically connected transmission grid as defined by the North American Electrical Reliability Corporation (NERC) regions.

(ii) For purposes of this section, fuel produced from biogas that is introduced

into a commercial distribution system may be considered renewable fuel and the producer may generate RINs if:

(A) The fuel is produced from renewable biomass and qualifies for a D code in Table 1 of this section or has received approval for use of a D code by the Administrator;

(B) The fuel producer has entered into a written contract for the sale of a specific quantity of fuel derived from renewable biomass sources with a party that uses fuel taken from a commercial distribution system for transportation fuel, and such fuel has been introduced into that commercial distribution system (e.g., pipeline);

(C) The quantity of fuel produced from the biogas for which RINs were generated was sold for use as transportation fuel and for no other purposes;

(D) The biogas was injected into and withdrawn from a physically connected carrier pipeline;

(E) The gas that is ultimately withdrawn from that pipeline for use in a transportation fuel is withdrawn in a manner and at a time consistent with the transport of gas between the injection and withdrawal points; and

(F) The volume and heat content of biogas injected into the pipeline and the volume of gas withdrawn to make a transportation fuel are measured by continuous metering.

(iii) The fuel sold for use in transportation fuel is considered produced from renewable biomass only to the extent that:

(A) The amount of fuel sold for use as transportation fuel matches the amount of fuel derived from renewable biomass that the producer contracted to have placed into the commercial distribution system; and

(B) No other party relied upon the contracted volume of biogas or renewable electricity for the creation of RINs.

(iv) For renewable electricity that is generated by co-firing a combination of renewable biomass and fossil fuel, the producer may generate RINs only for the portion attributable to the renewable biomass, using the procedure described in paragraph (f)(4) of this section.

* * * * *

(14) For purposes of verification, in order for facilities to meet the renewable electricity production requirement for the biogas-derived cellulosic diesel and cellulosic naphtha pathways, all conditions below apply.

(i) The quantity of process electricity produced on-site must be measured by continuous metering.

(ii) The electricity must be used to provide power to process units or process equipment at the facility.

(iii) The electrical energy must derive from raw landfill gas, waste heat from the production process, unconverted syngas from the F–T process, fuel gas from the hydroprocessing or combined heat and power (CHP) units that use non-fossil fuel based gas or other renewable sources.

■ 6. Section 80.1427 is amended by:

■ a. Revising paragraphs (a)(1), (a)(1)(i) definition ''$RVO_{CB,i}$'', (a)(1)(ii) definition ''$RVO_{BBD,i}$'', (a)(1)(iii) definition ''$RVO_{AB,i}$'', (a)(1)(iv) definition ''$RVO_{RF,i}$, (a)(5) introductory text, and (a)(6); and

■ b. Adding paragraph (a)(1)(v), (a)(1)(vi), (a)(1)(vii), (a)(1)(viii),

The additions and revisions read as follows:

§ 80.1427 How are RINs used to demonstrate compliance?

(a) *Renewable Volume Obligations and Exporter Renewable Volume Obligations.* (1) Except as specified in paragraph (b) of this section or § 80.1456, each party that is an obligated party under § 80 1406 and is obligated to meet the Renewable Volume Obligations under § 80.1407, or is an exporter of renewable fuel that is obligated to meet the Exporter Renewable Volume Obligations under § 80.1430, must demonstrate pursuant to § 80.1451(a)(1) that it is retiring for compliance purposes a sufficient number of RINs to satisfy the following equations.

(i) * * *

$RVO_{CB,i}$ = The renewable Volume Obligation for cellulosic biofuel for the obligated party for calendar year i, in gallons, pursuant to § 80.1407.

(ii) * * *

$RVO_{BBD,i}$ = The renewable Volume Obligation for biomass-based diesel for the obligated party for calendar year i, in gallons, pursuant to § 80.1407.

(iii) * * *

$RVO_{AB,i}$ = The renewable Volume Obligation for advanced biofuel for the obligated party for calendar year i, in gallons, pursuant to 80.1407.

(iv) * * *

$RVO_{RF,i}$ = The renewable Volume Obligation for renewable fuel for the obligated party for calendar year i, in gallons, pursuant to 80.1407.

(v) *Cellulosic biofuel—Exporter.*

$$(\Sigma RINNUM)_{CB,i} + (\Sigma RINNUM)_{CB,i-1} = ERVO_{CB,i}$$

Where:

$(\Sigma RINNUM)_{CB,i}$= Sum of all owned gallon-RINs that are valid for use in complying with the cellulosic biofuel ERVO, were generated in year i, and are being applied towards the $ERVO_{CB,i}$, in gallons.

(ΣRINNUM)CB,i-1= Sum of all owned gallon-RINs that are valid under subparagraph (6) of this paragraph for use in complying with the cellulosic biofuel ERVO, were generated in year i-1, and are being applied towards the $ERVO_{CB,i}$, in gallons.

$ERVO_{CB,\ k}$= The Exporter Renewable Volume Obligation for cellulosic biofuel for the renewable fuel exporter for an export of renewable fuel k, in gallons, pursuant to § 80.1430.

(vi) *Biomass-based diesel—Exporter.*

$$(\Sigma RINNUM)_{BBD,i} + (\Sigma RINNUM)BBD,i\text{-}1 = ERVO_{BBD,i}$$

Where:

$(\Sigma RINNUM)_{BBD,i}$= Sum of all owned gallon-RINs that are valid for use in complying with the biomass-based diesel ERVO, were generated in year i, and are being applied towards the $ERVO_{BBD,i}$, in gallons.

(ΣRINNUM)BBD,i-1= Sum of all owned gallon-RINs that are valid under subparagraph (6) of this paragraph for use in complying with the biomass-based diesel ERVO, were generated in year i-1, and are being applied towards the $ERVO_{BBD,i}$, in gallons.

$ERVO_{BBD,i}$= The Exporter Renewable Volume Obligation for biomass-based diesel for the renewable fuel exporter for an export of renewable fuel I after 2010, in gallons, pursuant to § 80.1430.

(vii) *Advanced biofuel—Exporter.*

$$(\Sigma RINNUM)_{AB,i} + (\Sigma RINNUM)AB,i\text{-}1 = ERVO_{AB,i}$$

Where:

$(\Sigma RINNUM)_{AB,i}$= Sum of all owned gallon-RINs that are valid for use in complying with the advanced biofuel ERVO, were generated in year i, and are being applied towards the $ERVO_{AB,i}$, in gallons.

(ΣRINNUM)AB,i-1= Sum of all owned gallon-RINs that are valid under subparagraph (6) of this paragraph for use in complying with the advanced biofuel ERVO, were generated in year i-1, and are being applied towards the $ERVO_{AB,i}$, in gallons.

$ERVO_{AB,i}$= The Exporter Renewable Volume Obligation for advanced biofuel for the renewable fuel exporter for an export of renewable fuel i, in gallons, pursuant to § 80.1430.

(viii) *Renewable fuel—Exporter.*

$$(\Sigma RINNUM)_{RF,i} + (\Sigma RINNUM)RF,i\text{-}1 = ERVO_{RF,i}$$

Where:

$(\Sigma RINNUM)_{RF,i}$= Sum of all owned gallon-RINs that are valid for use in complying with the renewable fuel (D code 6) E $ERVO_{RF,i}$, in gallons.

(ΣRINNUM)RF,i-1= Sum of all owned gallon-RINs that are valid under subparagraph (6) of this paragraph for use in complying with the renewable fuel (D code 6) ERVO, were generated in year i-

1, and are being applied towards the $ERVO_{RF,i}$, in gallons.

$ERVO_{RF,i}$= The exporter Renewable Volume Obligation for renewable fuel for the renewable fuel exporter for an export of renewable fuel i, in gallons, pursuant to § 80.1430.

* * * * *

(5) The value of (ΣRINNUM)i-1 may not exceed values determined by the following inequalities as provided in paragraph (a)(7)(iii) of this section and 80.1442(d), for obligated parties only.

* * * * *

(6) Except as provided in paragraph (a)(7) of this section:

(i) For obligated parties, RINs may only be used to demonstrate compliance with the RVOs for the calendar year in which they were generated or the following calendar year.

(ii) [Reserved.]

(iii) For Renewable Fuel Exporters, RINs generated in calendar year i, must be used to demonstrate compliance with the ERVOs from renewable fuel export(s) in calendar year i, except as provided in paragraph (a)(6)(iv) of this section.

(iv) For Renewable Fuel Exporters, RINs generated in calendar year i-1, may only be used to demonstrate compliance with the ERVOs from renewable fuel exports in January of calendar year i.

* * * * *

■ 7. Section 80.1441 is amended by adding paragraph (e)(2)(iii) to read as follows:

§ 80.1441 Small refinery exemption.

* * * * *

(e) * * *

(2) * * *

(iii) In order to qualify for an extension of its small refinery exemption, a refinery must meet the definition of ''small refinery'' in § 80.1401 for all full calendar years between 2006 and the date of submission of the petition for an extension.

* * * * *

■ 8. Section 80.1450 is amended by:

■ a. Adding paragraph (b)(1)(iv)(C);

■ b. Revising paragraphs (b)(1)(v)(C), (b)(1)(v)(D); and adding (b)(1)(v)(E); and

■ c. Adding paragraphs (h) and (i).

The additions and revisions read as follows:

§ 80.1450 What are the registration requirements under the RFS program?

* * * * *

(b) * * *

(1) * * *

(iv) * * *

(C) To demonstrate compliance with the renewable electricity production requirement for the biogas-derived cellulosic diesel and cellulosic naphtha pathways, provide all the following information:

(*1*) The energy source, equipment and/or process used to generate the electricity. Permitted sources are raw landfill gas, waste heat from the production process, unconverted syngas from the Fischer-Tropsch process, fuel gas from the hydroprocessing, or combined heat-and-power (CHP) units that use non-fossil fuel based gas or other renewable sources.

(2) Estimates of the total amount of electricity to be used, the total amount of grid electricity to be purchased, the total amount of renewable electricity to be produced, and a calculation of the percent of total process electricity use to be produced from allowed sources at the facility.

(v) * * *

(C)(*1*) For all facilities, copies of documents demonstrating each facility's actual peak capacity as defined in § 80.1401 if the maximum rated annual volume output of renewable fuel is not specified in the air permits specified in paragraphs (b)(1)(v)(A) and (b)(1)(v)(B) of this section, as appropriate.

(2) For facilities claiming the exemption described in § 80.1403 (c) or (d) which are exempt from air permit requirements and for which insufficient production records exist to establish actual peak capacity, copies of document demonstrating the facility's nameplate capacity, as defined in § 80.1401.

(D) For all facilities producing renewable electricity or fuel from biogas that qualifies as renewable fuel, submit all relevant information in § 80.1426(f)(10) or (11), and copies of all contracts that the track the biogas or renewable electricity from its original source, to the producer that processes it into renewable fuel, and finally to the end user that will actually use the renewable electricity or the renewable fuel derived from biogas for transportation purposes.

(1) Specific quantity and the heat content, percent efficiency of transfer, if applicable, and any conversion factors of the biogas or renewable biomass.

(2) Specific quantity and the heat content and percent efficiency of transfer, if applicable, and any conversion factors for the renewable fuel derived from biogas or renewable electricity.

(E) Such other records as may be requested by the Administrator.

* * * * *

(h) *Cancellation of Company Registration.* (1) EPA may cancel a company's registration, using the process in paragraph (h)(2) of this section, if any of the following circumstances exist:

(i) The company has reported no activity in EMTS for one calendar year (January 1 through December 31) or has failed to meet any EMTS requirement under § 80.1452;

(ii) The company has failed to comply with the registration requirements of this section;

(iii) The company has failed to submit any required report within thirty (30) days of the required submission date under § 80.1451; or

(iv) The attest engagement required under § 80.1454 has not been received within thirty (30) days of the required submission date.

(2) EPA will use the following process whenever it decides to cancel the registration of a company:

(i) EPA will notify the company's owner or Responsible Corporate Officer (RCO), in writing, that it intends to cancel the company's registration, and identifying the reasons for that proposed action. The company will have fourteen (14) calendar days from the date of the notification to correct the deficiencies identified or explain why there is no need for corrective action.

(ii) If the basis for EPA's notice of intent to cancel registration is the absence of EMTS activity for one calendar year, a stated intent to engage in activity reported through EMTS within the next calendar year will be sufficient to avoid cancellation of registration.

(iii) If the company does not respond, does not correct identified deficiencies, or does not explain why such correction is not necessary within the time allotted for response, EPA may cancel the company's registration within further notice to the party.

(3) Impact of registration cancellation.

(i) A company whose registration is cancelled shall still be liable for violation of any requirements of this subpart.

(ii) A company whose registration is cancelled will not be listed on any public list of actively registered companies that is maintained by EPA.

(iii) If the company whose registration is cancelled is a renewable fuel producer or foreign ethanol producer, it will not be listed on any public list of registered producers maintained by EPA.

(iv) A company whose registration is cancelled will not have access to any of the electronic reporting systems associated with the renewable fuel standard program, including the EPA Moderated Transaction System (EMTS).

(v) A company whose registration is canceled must submit any corrections of deficiencies to EPA on forms, and following policies, established by EPA.

(vi) If a company whose registration has been canceled wishes to re-register, they may initiate that process by submitting a new registration, consistent with paragraphs (a)–(c) of this section.

(vii) *English language registrations.* Any document submitted to EPA under § 80.1450 must be submitted in English, or shall include an English translation.

■ 9. Section 80.1451 is amended by revising paragraphs (a)(1)(vi) and (b)(1)(ii)(Q), and by adding paragraph (h) to read as follows:

§ 80.1451 What are the reporting requirements under the RFS program?

(a) * * *

(1) * * *

(vi) The RVOs for obligated parties, as defined in § 80.1427(a) and for exporters of renewable fuel, as defined in § 80.1427(a) and 80.1430(b), for the reporting year.

* * * * *

(b) * * *

(1) * * *

(ii) * * *

(Q) Producers or importers of renewable fuel produced at facilities that use biogas for process heat as described in § 80.1426(f)(12), shall report the total energy supplied to the renewable fuel facility, in MMBtu based on metering of gas volume. Producers or importers of renewable fuel produced at facilities that meet the renewable electricity production requirement for the biogas-derived cellulosic diesel and cellulosic naphtha pathways as described in § 80.1426(f)(13), shall report the total renewable electricity produced by the renewable facility, in kilowatt-hour (kWh) or megawatt-hour (MWh), the total amount of electricity used, the total amount of grid electricity purchased, and a calculation verifying the percent of total process electricity from allowed sources produced on-site.

* * * * *

(h) *English language reports.* Any document submitted to EPA under § 80.1451 must be submitted in English, or shall include an English translation.

■ 10. Amend Section 80.1452 to revise paragraph (c) introductory text and add paragraphs (e) and (f) to read as follows:

§ 80.1452 What are the requirements related to the EPA Moderated Transaction System (EMTS)?

* * * * *

(c) Starting July 1, 2010, each time any party sells, separates, or retires RINs generated on or after July 1, 2010, all of the following information must be submitted to EPA via the submitting party's EMTS account within five (5) business days of the reportable event, except as provided in § 80.1430(f). Starting July 1, 2010, each time any party purchases RINs generated on or after July 1, 2010, all the following information must be submitted to EPA via the submitting party's EMTS account within ten (10) business days of the reportable event. The reportable event for a RIN separation occurs on the date of separation as described in § 80.1429. The reportable event for a RIN retirement occurs on the date of retirement as described in this subpart.

* * * * *

(e) [Reserved.]

(f) [Reserved.]

■ 11. Amend Section 80.1454 by

■ a. Adding paragraph (a)(7);

■ b. Revising paragraph (b)(4)(i);

■ c. Adding paragraph (b)(7);

■ d. Revising paragraph (f)(3)(i) and adding paragraph (f)(5); and

■ e. Revising paragraph (k)(1); and

■ f. Adding paragraph (q).

The additions and revisions read as follows:

§ 80.1454 What are the recordkeeping requirements under the RFS program?

* * * * *

(a) * * *

(7) Records related to any volume of renewable fuel that was disqualified by the party pursuant to § 80.1433:

(b) * * *

(4) * * *

(i) A list of the RINs owned, purchased, sold, separated, retired, or reinstated.

* * * * *

(7) Records related to any volume of renewable fuel where RINs were not generated by the renewable fuel producer or importer pursuant to § 80.1426(c):

* * * * *

(f) * * *

(3) * * *

(i) A list of the RINs owned, purchased, sold, separated, retired, or reinstated.

* * * * *

(5) Records related to any volume of renewable fuel that was disqualified by the party pursuant to § 80.1433.

* * * * *

(k)(1) Biogas and electricity in pathways involving feedstocks other than grain sorghum. A renewable fuel producer that generates RINs for renewable CNG/LNG or renewable electricity produced from renewable biomass for fuels that are used for transportation pursuant to § 80.1426(f)(10) and (11), or that uses process heat from biogas to generate RINs for renewable fuel pursuant to § 80.1426(f)(12) or that meets the renewable electricity production requirement for the biogas-derived cellulosic diesel and cellulosic naphtha pathways pursuant to § 80.1426(f)(13) shall keep all of the following additional records:

(i) Documents demonstrating the kilowatt-hours (kWh) of allowable electricity relied upon under § 80.1426(f)(13) that was generated at the facility, if applicable.

(ii) The energy source, equipment and/or process used to generate the electricity relied upon under § 80.1426(f)(13), if applicable. Permitted sources are raw landfill gas, waste heat from the production process, unconverted syngas from the Fischer-Tropsch process, fuel gas from the hydroprocessing, or combined heat-and-power (CHP) units that use non-fossil fuel based gas or other renewable sources.

(iii) Contracts and documents memorializing the sale of renewable CNG/LNG or renewable electricity for use as transportation fuel relied upon in § 80.1426(f)(10), § 80.1426(f)(11), or for use of biogas for use as process heat to make renewable fuel as relied upon in § 80.1426(f)(12) and the transfer of title of the biogas or renewable electricity and all associated environmental attributes from the point of generation to the facility which sells or uses the fuel for transportation purposes.

(iv) Documents demonstrating the volume and energy content of biogas, or kilowatts of renewable electricity, relied upon under § 80.1426(f)(10) that was delivered to the facility which sells or uses the fuel for transportation purposes.

(v) Documents demonstrating the volume and energy content of biogas, or kilowatts of renewable electricity, relied upon under § 80.1426(f)(11), or biogas relied upon under § 80.1426(f)(12) that was placed into the common carrier pipeline (for biogas) or transmission line shared power grid (for renewable electricity).

(vi) Documents demonstrating the volume and energy content of biogas relied upon under § 80.1426(f)(12) at the point of distribution.

(vii) Affidavits from the biogas or renewable electricity producer and all parties that held title to the biogas or renewable electricity confirming that title and environmental attributes of the biogas or renewable electricity relied upon under § 80.1426(f)(10) and (11) were used for transportation purposes only, and that the environmental attributes of the biogas or process

electricity relied upon under § 80.1426(f)(12) or § 80.1426(f)(13) were used for process heat or electricity at the renewable fuel producer's facility, and for no other purpose. The renewable fuel producer shall create and/or obtain these affidavits at least once per calendar quarter.

(viii) The biogas or renewable electricity producer's Compliance Certification required under Title V of the Clean Air Act.

(ix) Documents demonstrating the total amount of grid electricity purchased and calculations showing the percent of total electricity usage provided by allowable electricity production at the facility, if applicable.

(x) Such other records as may be requested by the Administrator.

* * * * *

(q) *English language records.* Any document requested by the Administrator under this section must be submitted in English, or shall include an English translation.

■ 12. Section 80.1463 is amended by adding paragraph (d) to read as follows:

§ 80.1463 What penalties apply under the RFS program?

* * * * *

(d) Any person violating § 80.1460(b)(1)–(4) or (6) engages in a separate violation for each day that an invalid RIN remains available for use in RFS compliance, and each such daily violation is punishable by the maximum daily penalty allowed under the Clean Air Act.

■ 13. Section 80.1466 is amended by revising the section heading and paragraphs (a), (d)(1), (d)(1)(vi), (d)(3)(ii), (e)(1)(i), (f) introductory text, (h), (h)(1), and (o)(2) and adding paragraph (p) as follows:

§ 80.1466 What are the additional requirements under this subpart for RIN-generating foreign producers, non RIN-generating foreign producers, foreign ethanol producers and importers of renewable fuels?

(a) *Foreign producer of renewable fuel.* For purposes of this subpart, a foreign producer of renewable fuel is a person located outside the United States, the Commonwealth of Puerto Rico, the Virgin Islands, Guam, American Samoa, and the Commonwealth of the Northern Mariana Islands (collectively referred to in this section as ''the United States'') that has been registered with EPA as a renewable fuel producer or foreign ethanol producer, regardless of whether the foreign renewable fuel producer generates RINs or an importer of renewable fuel generates RINs for the fuel. Hereinafter referred to as a ''foreign producer'' under this section.

(d) * * * (1) On each occasion that RFS–FRRF is loaded onto a vessel for transport to the United States the foreign producer shall have an independent third party do all the following:

* * * * *

(vi) Review original documents that reflect movement and storage of the RFS–FRRF from the foreign producer to the load port, and from this review determine all the following:

* * * * *

(3) * * *

(ii) Be independent under the criteria specified in § 80.65(f)(2)(iii); and

* * * * *

(e) * * * (1)(i) Any foreign producer and any United States importer of RFS–FRRF shall compare the results from the load port testing under paragraph (d) of this section, with the port of entry testing as reported under paragraph (k) of this section, for the volume of renewable fuel, standardized per § 80.1426(f)(8), except as specified in paragraph (e)(1)(ii) of this section.

* * * * *

(f) *Foreign producer commitments.* Any foreign producer shall commit to and comply with the provisions contained in this paragraph (f) as a condition to being approved as a foreign producer under this subpart.

* * * * *

(h) *Bond posting.* Any foreign producer shall meet the requirements of this paragraph (h) as a condition to approval as a foreign producer under this subpart and on a continuing basis if the foreign producer exceeds projections used in calculated the bond.

(1) The foreign producer shall post a bond of the amount calculated using one of the two following equations whichever equation results in a higher bond value:

$$\text{Bond} = G * \$0.01$$

Or

$$\text{Bond} = .25 * \Sigma(M_i * RIN_i)$$

Where:

Bond = amount of the bond in U.S. dollars.

G = the greater of: the largest volume of renewable fuel produced by the foreign producer and exported to the United States, in gallons, during a single calendar year among the five preceding calendar years, or the largest volume of renewable fuel that the foreign producer expects to export to the Unites States during any calendar year identified in the Production Outlook Report required by § 80.1449. If the volume of renewable fuel anticipated to be exported to the United States during any calendar year increases above the value used in calculating the existing bond amount, the foreign producer shall increase the bond by using the higher anticipated export volume for the calendar year to calculate a higher bond amount and purchasing the higher bond prior to the generation of RINs to reflect the increase in export volume. M_i = RIN multiplier for specified D code, i, in U.S. dollars, as follows:

The RIN multiplier for a D3 RIN is $0.78
The RIN multiplier for a D4 RIN is $1.30
The RIN multiplier for a D5 RIN is $0.80
The RIN multiplier for a D6 RIN is $0.02
The RIN multiplier for a D7 RIN is $0.78

RIN_i = the greater of: (i) the largest quantity of RINs for a specified D code, i, produced by the foreign producer and exported to the United States, in gallons, during a single calendar year among the five preceding calendar years, or (ii) the largest quantity of RINs that the foreign producer expects to export to the United States during any calendar year identified in the Production Outlook Report required by § 80.1449. If the volume of renewable fuel anticipated to be exported to the United States during any calendar year increases above the value used in calculating the existing bond amount, the foreign producer shall increase the bond by using the higher anticipated export volume for the calendar year to calculate a higher bond amount and purchasing the higher bond prior to the generation of RINs to reflect the increased export volume.

* * * * *

(o)

(2) Signed by the president or owner of the foreign producer company, or by that person's immediate designee, and shall contain the following declaration: ''I hereby certify: (1) That I have actual authority to sign on behalf of and to bind [INSERT NAME OF FOREIGN PRODUCER] with regard to all statements contained herein; (2) that I am aware that the information contained herein is being Certified, or submitted to the United States Environmental Protection Agency, under the requirements of 40 CFR part 80, subpart M, and that the information is material for determining compliance under these regulations; and (3) that I have read and understand the information being Certified or submitted, and this information is true, complete and correct to the best of my knowledge and belief after I have taken reasonable and appropriate steps to verify the accuracy thereof. I affirm that I have read and understand the provisions of 40 CFR part 80, subpart M, including 40 CFR 80.1466 apply to [INSERT NAME OF FOREIGN PRODUCER]. Pursuant to Clean Air Act section 113(c) and 18 U.S.C. 1001, the penalty for furnishing false, incomplete or misleading information in this certification or submission is a fine of

up to $10,000 U.S., and/or imprisonment for up to five years.''

(p) *Foreign Produced Renewable Fuel and Foreign Produced Ethanol for Which RINs Have Been or Will Be Generated by the Importer*

(1) For non-RIN generating foreign producers and foreign ethanol producers already registered pursuant to section § 80.1450, all of the requirements in paragraphs (a) through (o) of this section must be satisfied no later than January 1, 2013.

(2) For RIN generating foreign producers and foreign ethanol producers already registered pursuant to section § 80.1450 and 80.1466, paragraph (h) of this section must be satisfied no later than January 1, 2013 if the required amount in paragraph (h) of this section exceeds the original amount of the bond posted when the producer was originally approved under 80.1466.

■ 14. Section 80.1500 is amended by revising the definitions of E10, E15, and EX to read as follows:

§ 80.1500 Definitions.

* * * * *

E10 means a gasoline-ethanol blend that contains at least 9 and no more than 10 volume percent ethanol.

E15 means a gasoline-ethanol blend that contains greater than 10 volume percent ethanol and not more than 15 volume percent ethanol.

EX means a gasoline–ethanol blend that contains less than 9 volume percent ethanol where X equals the maximum volume percent ethanol in the gasoline-ethanol blend.

* * * * *

■ 15. Section 80.1501 is amended by revising the section 80.1501 heading paragraphs (a) introductory text, (b)(3)(i) and (iv), and (b)(4)(ii) to read as follows:

§ 80.1501 What are the labeling requirements that apply to retailers and wholesale purchaser-consumers of gasoline-ethanol blends that contain greater than 10 volume percent ethanol and not more than 15 volume percent ethanol?

(a) Any retailer or wholesale purchaser-consumer who sells, dispenses, or offers for sale or dispensing E15 shall affix the following conspicuous and legible label to the fuel dispenser:

* * * * *

(b) * * *

(3) * * *

(i) The word ''ATTENTION'' shall be capitalized in 20-point, orange, Helvetica Neue LT 77 Bold Condensed font, and shall be placed in the top 1.25 inches of the label as further described in (b)(4)(iii) below.

* * * * *

(iv) The words ''Use only in'' shall be in 20-point, left-justified, black, Helvetica Bold font in the bottom 1.875 inches of the label.

(4) * * *

* * * * *

(ii) The background of the bottom 1.875 inches of the label shall be orange.

* * * * *

■ 16. Section 80.1502 is amended by revising paragraphs (b)(3)(iii)(A), (b)(3)(iv), (b)(4)(iv)(B), (b)(4)(v)(A), (c)(4), and (c)(6) to read as follows:

§ 80.1502 What are the survey requirements related to gasoline-ethanol blends?

* * * * *

(b) * * *

(3) * * *

(iii) * * *

(A) Samples collected at retail outlets shall be shipped the same day the samples are collected via ground service to the laboratory and analyzed for oxygenate content. Samples collected at a dispenser labeled E15 in any manner, or at a tank serving such a dispenser, shall also be analyzed for RVP during the high ozone season defined in § 80.27(a)(2)(ii) or any SIP approved or promulgated under §§ 110 or 172 of the Clean Air Act. Such analysis shall be completed within 10 days after receipt of the sample in the laboratory. Nothing in this section shall be interpreted to require RVP testing of a sample from any dispenser or tank serving it unless the dispenser is labeled E15 in any manner.

* * * * *

(iv) In the case of any test that yields a result that does not match the label affixed to the product (e.g., a sample greater than 15 volume percent ethanol dispensed from a fuel dispenser labeled as ''E15'' or a sample containing greater than 10 volume percent ethanol and not more than 15 volume percent ethanol dispensed from a fuel dispenser not labeled as ''E15''), or the RVP standard of § 80.27(a)(2), the independent survey association shall, within 24 hours after the laboratory has completed analysis of the sample, send notification of the test result as follows:

* * * * *

(4) * * *

(iv) * * *

(B) In the case of any retail outlet from which a sample of gasoline was collected during a survey and determined to have an ethanol content that does not match the fuel dispenser label (e.g. a sample greater than 15 volume percent ethanol dispensed from a fuel dispenser labeled as ''E15'' or a sample with greater than 10 volume percent ethanol and not more than 15 volume percent ethanol dispensed from a fuel dispenser not labeled as ''E15'') or determined to have a dispenser containing fuel whose RVP does not comply with § 80.27(a)(2), that retail outlet shall be included in the subsequent survey.

* * * * *

(v) * * *

(A) The minimum number of samples to be included in the survey plan for each calendar year shall be calculated as follows:

$$n = \left\{\left[\left(Z_\alpha + Z_\beta\right)\right]^2 \Big/ \left(4 * \left[arc\sin\left(\sqrt{\phi_1}\right) - arc\sin\left(\sqrt{\phi_0}\right)\right]^2\right)\right\} * St_n * F_a * F_b * Su_n$$

Where:

n = minimum number of samples in a year-long survey series. However, in no case shall n be smaller than 7,500.

$Z\alpha$ = upper percentile point from the normal distribution to achieve a one-tailed 95% confidence level (5% α-level). Thus, $Z\alpha$ equals 1.645.

$Z\beta$ = upper percentile point to achieve 95% power. Thus, $Z\beta$ equals 1.645.

ϕ_1 = the maximum proportion of non-compliant stations for a region to be deemed compliant. In this test, the parameter needs to be 5% or greater, i.e., 5% or more of the stations, within a stratum such that the region is considered non-compliant. For this survey, ϕ_1 will be 5%.

ϕ_o= the underlying proportion of non-compliant stations in a sample. For the first survey plan, ϕ_o will be 2.3%. For subsequent survey plans, ϕ_o will be the average of the proportion of stations found to be non-compliant over the previous four surveys.

St_n = number of sampling strata. For purposes of this survey program, St_n equals 3.

F_a = adjustment factor for the number of extra samples required to compensate for collected samples that cannot be included in the survey, based on the

number of additional samples required during the previous four surveys. However, in no case shall the value of F_a be smaller than 1.1.

F_b = adjustment factor for the number of samples required to resample each retail outlet with test results exceeding the labeled amount (e.g. a sample greater than 15 volume percent ethanol dispensed from a fuel dispenser labeled as ''E15'', a sample with greater than 10 volume percent ethanol and not more than 15 volume percent ethanol dispensed from a fuel dispenser not labeled as ''E15''), or a sample dispensed from a fuel dispenser labeled as ''E15'' with greater than the applicable seasonal and geographic RVP pursuant to § 80.27, based on the rate of resampling required during the previous four surveys. However, in no case shall the value of F_b be smaller than 1.1.

Su_n = number of surveys per year. For purposes of this survey program, Su_n equals 4.

* * * * *

(c) * * *

(4) The survey program plan must be sent to the following address: Director, Compliance Division, U.S. Environmental Protection Agency, 1200 Pennsylvania Ave. NW., Mail Code 6506J, Washington, DC 20460.

* * * * *

(6) The approving official for a survey plan under this section is the Director of the Compliance Division, Office of Transportation and Air Quality.

* * * * *

■ 17. Section 80.1503 is amended by revising paragraphs (a)(1)(vi)(B)(3), (a)(1)(vi)(C)(2), adding paragraph (a)(1)(vi)(C)(3), and revising paragraphs (b)(1)(vi)(B) through (D).

The revisions and additions read as follows:

§ 80.1503 What are the product transfer document requirements for gasoline-ethanol blends, gasolines, and conventional blendstocks for oxygenate blending subject to this subpart?

(a) * * *

(1) * * *

(vi) * * *

(B) * * *

(*3*) ''The use of this blendstock/gasoline to manufacture a gasoline-ethanol blend containing anything other than between 9 and 10 volume percent ethanol may cause a summertime RVP violation.''

(C) * * *

(2) The requirements in paragraph (a)(1) do not apply to reformulated gasoline blendstock for oxygenate blending, as defined in § 80.2(kk), which is subject to the product transfer document requirements of § 80.69 and § 80.77.

(3) Except for transfers to truck carriers, retailers, or wholesale purchaser-consumers, product codes may be used to convey the information required under paragraph (a)(1) of this section if such codes are clearly understood by each transferee.

(b) * * *

(1) * * *

(vi) * * *

(B) For gasoline containing less than 9 volume percent ethanol, the following statement: ''EX—Contains up to X% ethanol. The RVP does not exceed [fill in appropriate value] psi.'' The term X refers to the maximum volume percent ethanol present in the gasoline.

(C) For gasoline containing between 9 and 10 volume percent ethanol (E10), the following statement: ''E10: Contains between 9 and 10 vol % ethanol. The RVP does not exceed [fill in appropriate value] psi. The 1 psi RVP waiver applies to this gasoline. Do not mix with gasoline containing anything other than between 9 and 10 vol % ethanol.''

(D) For gasoline containing greater than 10 volume percent and not more than 15 volume percent ethanol (E15), the following statement: ''E15: Contains up to 15 vol % ethanol. The RVP does not exceed [fill in appropriate value] psi;'' or

* * * * *

■ 18. Section 80.1504 is amended by revising paragraphs (a)(1), (a)(3), (e), and (g) to read as follows:

§ 80.1504 What acts are prohibited under this subpart?

* * * * *

(a)(1) Sell, introduce, cause or permit the sale or introduction of gasoline containing greater than 10 volume percent ethanol (i.e., greater than E10) into any model year 2000 or older light-duty gasoline motor vehicle, any heavy-duty gasoline motor vehicle or engine, any highway or off-highway motorcycle, or any gasoline-powered nonroad engines, vehicles or equipment.

* * * * *

(3) Notwithstanding paragraphs (a)(1) and (a)(2) of this section, no person shall be prohibited from manufacturing, selling, introducing, or causing or allowing the sale or introduction of gasoline containing greater than 10 volume percent ethanol into any flex-fuel vehicle.

* * * * *

(e)(1) Improperly blend, or cause the improper blending of, ethanol into conventional blendstock for oxygenate blending, gasoline or gasoline already containing ethanol, in a manner inconsistent with the information on the product transfer document under § 80.1503(a)(1)(vi) or § 80.1503(b)(1)(vi);

(2) No person shall produce E10 by blending ethanol and gasoline in a manner designed to produce a fuel that contains less than 9.0 or more than 10.0 volume percent ethanol.

(3) No person shall produce E15 by blending ethanol and gasoline in a manner designed to produce a fuel that contains less than 10.0 volume percent ethanol or more than 15.0 volume percent ethanol.

(4) No person shall produce EX by blending ethanol and gasoline in a manner designed to produce a fuel that contains less than 9.0 volume percent ethanol.

* * * * *

(g) For gasoline during the regulatory control periods, combine any gasoline-ethanol blend that qualifies for the 1 psi allowance under the special regulatory treatment as provided by § 80.27(d) applicable to 9–10 volume percent gasoline-ethanol blends with any gasoline containing less than 9 volume percent ethanol or more than 10 volume percent ethanol up to a maximum of 15 volume percent ethanol.

* * * * *

■ 19. Section 80.1508 is amended by revising paragraph (b) as follows:

§ 80.1508 What evidence may be used to determine compliance with the requirements of this subpart and liability for violations of this subpart?

* * * * *

(b) Determinations of compliance with the requirements of this subpart and determinations of liability for any violation of this subpart may be based on information obtained from any source or location. Such information may include, but is not limited to, business records and commercial documents.

■ 20. Section 80.1509 is added to read as follows:

§ 80.1509 Rounding a test result for purposes of this Subpart.

The provisions of Section 80.9 apply for purposes of determining the ethanol content of a gasoline-ethanol blend under this subpart.

[FR Doc. 2013–12714 Filed 6–13–13; 8:45 am]

BILLING CODE 6560–50–P

FEDERAL REGISTER

Vol. 78 Friday,

No. 115 June 14, 2013

Part III

The President

Notice of June 13, 2013—Continuation of the National Emergency With Respect to the Actions and Policies of Certain Members of the Government of Belarus and Other Persons To Undermine Belarus's Democratic Processes or Institutions

Federal Register
Vol. 78, No. 115
Friday, June 14, 2013

Presidential Documents

Title 3—

The President

Notice of June 13, 2013

Continuation of the National Emergency With Respect to the Actions and Policies of Certain Members of the Government of Belarus and Other Persons To Undermine Belarus's Democratic Processes or Institutions

On June 16, 2006, by Executive Order 13405, the President declared a national emergency pursuant to the International Emergency Economic Powers Act (50 U.S.C. 1701—1706) to deal with the unusual and extraordinary threat to the national security and foreign policy of the United States constituted by the actions and policies of certain members of the Government of Belarus and other persons to undermine Belarus's democratic processes or institutions, manifested in the fundamentally undemocratic March 2006 elections, to commit human rights abuses related to political repression, including detentions and disappearances, and to engage in public corruption, including by diverting or misusing Belarusian public assets or by misusing public authority.

In 2012, the Government of Belarus continued its crackdown against political opposition, civil society, and independent media. The September 23 elections failed to meet international standards. The government arbitrarily arrested, detained, and imprisoned citizens for criticizing officials or for participating in demonstrations; imprisoned at least one human rights activist on manufactured charges; and prevented independent media from disseminating information and materials. These actions show that the Government of Belarus has not taken steps forward in the development of democratic governance and respect for human rights.

The actions and policies of certain members of the Government of Belarus and other persons continue to pose an unusual and extraordinary threat to the national security and foreign policy of the United States. For this reason, the national emergency declared on June 16, 2006, and the measures adopted on that date to deal with that emergency, must continue in effect beyond June 16, 2013. Therefore, in accordance with section 202(d) of the National Emergencies Act (50 U.S.C. 1622(d)), I am continuing for 1 year the national emergency declared in Executive Order 13405.

This notice shall be published in the **Federal Register** and transmitted to the Congress.

THE WHITE HOUSE,
Washington, June 13, 2013.

[FR Doc. 2013–14444
Filed 6–13–13; 2:15 pm]
Billing code 3295–F3

Reader Aids

Federal Register

Vol. 78, No. 115

Friday, June 14, 2013

CUSTOMER SERVICE AND INFORMATION

Federal Register/Code of Federal Regulations	
General Information, indexes and other finding aids	**202–741–6000**
Laws	**741–6000**
Presidential Documents	
Executive orders and proclamations	**741–6000**
The United States Government Manual	**741–6000**
Other Services	
Electronic and on-line services (voice)	**741–6020**
Privacy Act Compilation	**741–6064**
Public Laws Update Service (numbers, dates, etc.)	**741–6043**
TTY for the deaf-and-hard-of-hearing	**741–6086**

ELECTRONIC RESEARCH

World Wide Web

Full text of the daily Federal Register, CFR and other publications is located at: **www.fdsys.gov.**

Federal Register information and research tools, including Public Inspection List, indexes, and links to GPO Access are located at: **www.ofr.gov.**

E-mail

FEDREGTOC-L (Federal Register Table of Contents LISTSERV) is an open e-mail service that provides subscribers with a digital form of the Federal Register Table of Contents. The digital form of the Federal Register Table of Contents includes HTML and PDF links to the full text of each document.

To join or leave, go to **http://listserv.access.gpo.gov** and select *Online mailing list archives, FEDREGTOC-L, Join or leave the list (or change settings);* then follow the instructions.

PENS (Public Law Electronic Notification Service) is an e-mail service that notifies subscribers of recently enacted laws.

To subscribe, go to **http://listserv.gsa.gov/archives/publaws-l.html** and select *Join or leave the list (or change settings);* then follow the instructions.

FEDREGTOC-L and **PENS** are mailing lists only. We cannot respond to specific inquiries.

Reference questions. Send questions and comments about the Federal Register system to: **fedreg.info@nara.gov**

The Federal Register staff cannot interpret specific documents or regulations.

Reminders. Effective January 1, 2009, the Reminders, including Rules Going Into Effect and Comments Due Next Week, no longer appear in the Reader Aids section of the Federal Register. This information can be found online at **http://www.regulations.gov.**

CFR Checklist. Effective January 1, 2009, the CFR Checklist no longer appears in the Federal Register. This information can be found online at **http://bookstore.gpo.gov/.**

FEDERAL REGISTER PAGES AND DATE, JUNE

32979–33192 3
33193–33688 4
33689–33954 5
33955–34244 6
34245–34544 7
34545–34866 10
34867–35100 11
35101–35544 12
35545–35742 13
35743–36082 14

CFR PARTS AFFECTED DURING JUNE

At the end of each month the Office of the Federal Register publishes separately a List of CFR Sections Affected (LSA), which lists parts and sections affected by documents published since the revision date of each title.

3 CFR

Proclamations:
8988 33955
8989 33957
8990 33959
8991 33961
8992 34243
8993 35101

Executive Orders:
13622 (Amended by EO 13645) 33945
13645 33945

Administrative Orders:
Memorandums:
Memorandum of May 31, 2013 33943
Memorandum of June 3, 2013 35545
Memorandum of June 7, 2013 35539
Notices:
Notice of June 13, 2013 36081
Presidential Determinations:
No. 2013-09 of June 4, 2013 35535
No. 2013-09 of June 5, 2013 35537

5 CFR

Proposed Rules:
581 33912
582 33912
831 33912
838 33912
841 33912
842 33912
843 33912
848 33912
870 33912
890 33912

6 CFR

1000 33689

7 CFR

457 33690
948 35743
3201 34867

Proposed Rules:
1710 ..... 33755, 33757

8 CFR

235 35103

9 CFR

Proposed Rules:
317 34589

10 CFR

1 34245
2 34245
30 33691
40 ..... 33691, 34245
50 34245
51 34245
52 34245
70 ..... 33691, 34245
71 35746
73 ..... 34245, 35746
100 34245
170 33691
171 33691

Proposed Rules:
20 33008
50 34604
70 33995
431 33263

12 CFR

237 34545
261 34874
380 34712
615 34550
621 34550
652 34550
1026 35430

14 CFR

23 35747
29 35108
39 ..... 33193, 33197, 33199, 33201, 33204, 33206, 34550, 35110, 35747, 35749, 35752
71 ..... 33963, 33964, 33965, 33966, 33967, 33968, 34522, 34553, 34554, 34555, 34556, 34557, 34558
95 32979
97 ..... 34559, 34561

Proposed Rules:
1 34935
23 34935
25 34935
27 34935
29 34935
39 ..... 33010, 33012, 33764, 33766, 33768, 33770, 34279, 34280, 34282, 34284, 24386, 34288, 34290, 34605, 34958, 34960, 35574, 35773
61 34935
71 ..... 33015, 33016, 33017, 33019, 33263, 33265, 33772, 34608, 34609, 35776
91 34935
121 34935
125 34935
135 34935

15 CFR

740 33692
742 33692
748 32981

774 33692
902 33243
Proposed Rules:
922 35776

17 CFR

37 ....33476, 33606
38 ....32988, 33606

20 CFR

718 35549
725 35549
Proposed Rules:
718 35575
725 35575

21 CFR

73 35115
316 35117
522 33698
579 34565
Proposed Rules:
317 35155
890 35173

22 CFR

41 33699
42 32989

24 CFR

Proposed Rules:
1000 35178

26 CFR

1 35559
40 34874
49 34874
54 33158
602 34874

27 CFR

4 34565

29 CFR

1910 35559
1926 35559
2590 33158
4022 35754
4044 35754
Proposed Rules:
1910 35585
1926 35585

30 CFR

Proposed Rules:
934 35781

31 CFR

Proposed Rules:
1010 ....33774, 34008

32 CFR

65 34250
706 33208
2402 33209
Proposed Rules:
199 34292

33 CFR

100 ....32990, 33216, 33219, 33221, 33700, 33969, 34568, 34570, 34573, 34879, 34881, 34884, 34886, 34887, 35135, 35756
117 ....33223, 33971, 34892, 34893, 35756, 35757, 35758
165 ....32990, 33224, 33703, 33972, 33975, 34255, 34258, 34573, 34575, 34577, 34579, 34582, 34887, 34894, 34895, 34896, 34897, 35135, 35567
Proposed Rules:
100 ....35593, 35596, 35783
151 33774
165 ....34293, 34300, 35787, 35790, 35798, 35801

34 CFR

Ch. III 33228, 34261, 34897, 34901, 35758, 35761
Proposed Rules:
75 34962
Ch. III 34962, 35808
Ch. VI 35179

36 CFR

212 33705
214 33705
215 33705
222 33705
228 33705
241 33705
254 33705
292 33705

39 CFR

Proposed Rules:
3001 35812
3030 35826
3032 35826
3033 35826

40 CFR

52 ....33230, 33726, 33977, 34584, 34903, 34906, 34910, 34911, 34915, 35764
62 34918
81 33230
180 ....33731, 33736, 33744, 33748, 35143, 35147
271 ....33986, 35766
Proposed Rules:
49 33266
50 ....34178, 34964
51 ....34178, 34964
52 ....33784, 34013, 34303, 34306, 34738, 34965, 34966, 34970, 34972, 35181, 35599
62 34973
70 ....34178, 34964
71 ....34178, 34964
80 36042
180 ....33785, 35189
271 35837
300 33276
423 34432
770 ....34796, 34820

42 CFR

433 32991
Proposed Rules:
52i 35837

43 CFR

1820 35570
Proposed Rules:
3160 34611
3900 35601
3920 35601
3930 35601

44 CFR

64 33989
67 33991
Proposed Rules:
67 34014

45 CFR

146 33158
147 33158
155 33233
156 33233
160 34264
164 34264
1180 34920

46 CFR

221 35769

47 CFR

1 33634
2 33634
15 34922
54 32991
95 33634
Proposed Rules:
1 ....33654, 34015, 34612
2 ....33654, 34015, 34309
15 33654
20 34015
22 34015
24 ....33654, 34015
25 ....33654, 34309
27 ....33654, 34015
52 34015
54 34016
64 35191
73 33654
90 ....33654, 34015
95 ....33654, 34015
97 33654
101 33654

48 CFR

204 33993
209 33994
227 33994
252 33994
1401 34266
1452 34266
1480 34266
Proposed Rules:
2 34020
4 34020
925 35195
952 35195
970 35195

49 CFR

214 33754

50 CFR

2 35149
10 35149
13 35149
15 35149
18 35364
21 35149
29 35149
80 35149
84 35149
85 35149
100 35149
300 ....33240, 33243
622 ....32995, 33255, 33259, 34586, 35571
648 ....34587, 34928
660 35153
665 32996
679 ....33243, 35572, 35771
Proposed Rules:
17 ....33282, 33790, 35201, 35664, 35719
20 35844
223 34309
224 ....33300, 34024, 34309
622 34310
648 33020
679 33040
697 35217

LIST OF PUBLIC LAWS

Note: No public bills which have become law were received by the Office of the Federal Register for inclusion in today's **List of Public Laws**.

Last List June 5, 2013

Public Laws Update Service (PLUS)

PLUS is a recorded announcement of newly enacted public laws.

Note: Effective July 1, 2013, the PLUS recording service will end.

Public Law information will continue to be available on **PENS** at http://listserv.gsa.gov/archives/publaws-l.html and the Federal Register Twitter feed at http://twitter.com/fedregister.